PUBLIC ROADS DIVISION	STATE DIST. NO.	PROJECT NUMBER	CO
W. VA.	2	430-36-9.32	Mi

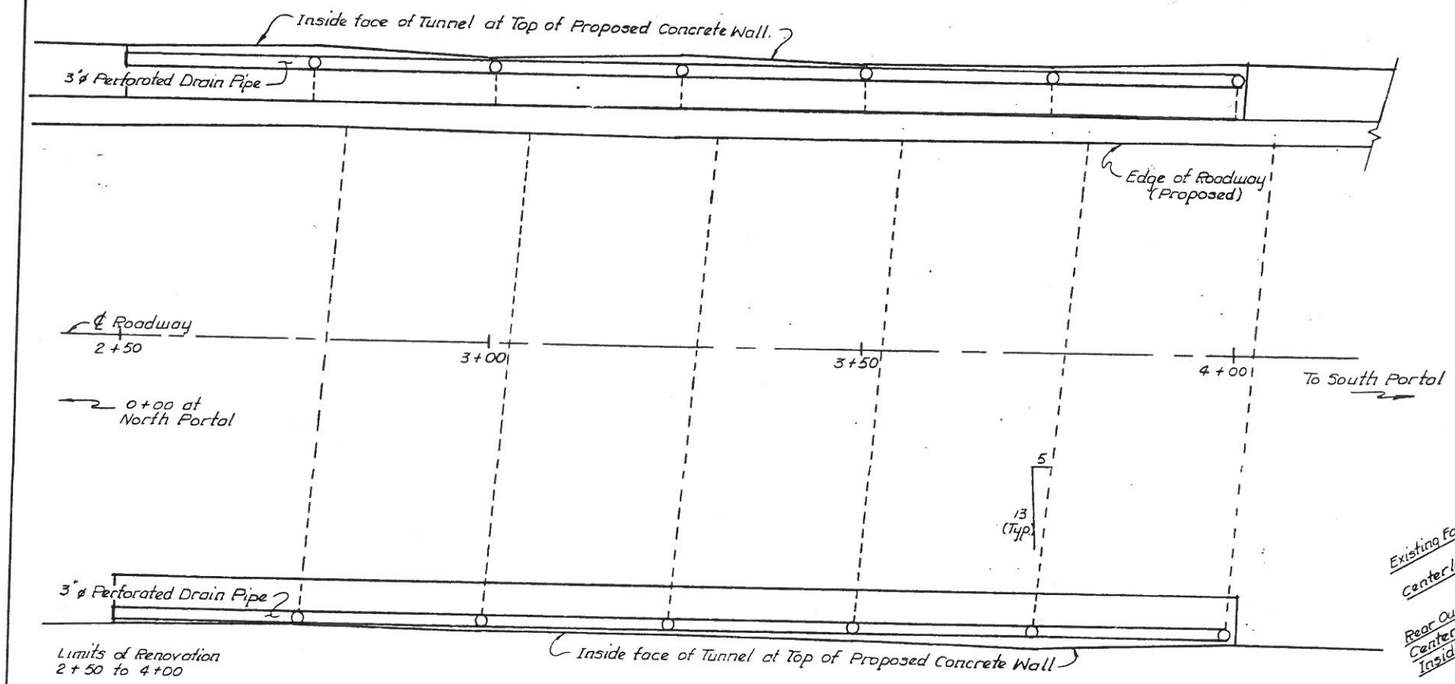

PLAN

Scale: 1" = 2'-0" Vertical, 1" = 10'-0" Horizontal

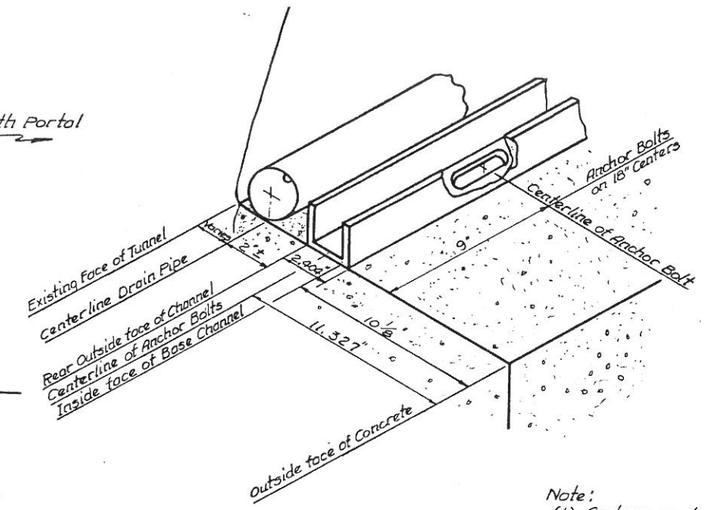

DETAIL "B"

Scale: 1" = 4"

ESTIMATE OF QUANTITIE	
Description	Un
Class B Concrete	C.
*Tunnel Liner	L.
Reinforcing Steel Bars	lb
3"ø Perforated Drain Pipe	L.
3"ø Solid Drain Pipe	L.
Anchors	Ea
Ohio River Gravel #8 or #9	C.
Crushed Stone #4 gradation	C.
Channel Anchor Bolts - 3/4" Dia.	Ea

* Tunnel liner plate shall be in acco applicable sections of Section 612 of the Specifications adopted 1978 as amende

Liner Plate Required:
6-16 ft plates per 18" width Total =
1-14 ft plates per 18" width Total =
300 LF. of Base Channel for Arches

Note: Anchor Bolts for Base Channe be set on 18" centers and ha minimum embedment of 12" and 3" of threads extending from the of the concrete.

Note:
(1.) Anchors are to be spaced at 1'-0" Centers in the horizontal plane.
(2.) Space vertical No. 5 bars at 1'-0" centers between anchors.

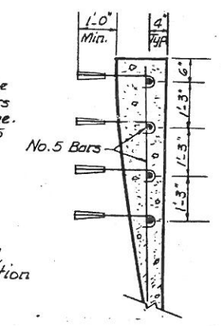

DETAIL "A"

Scale: 1" = 2'-0"

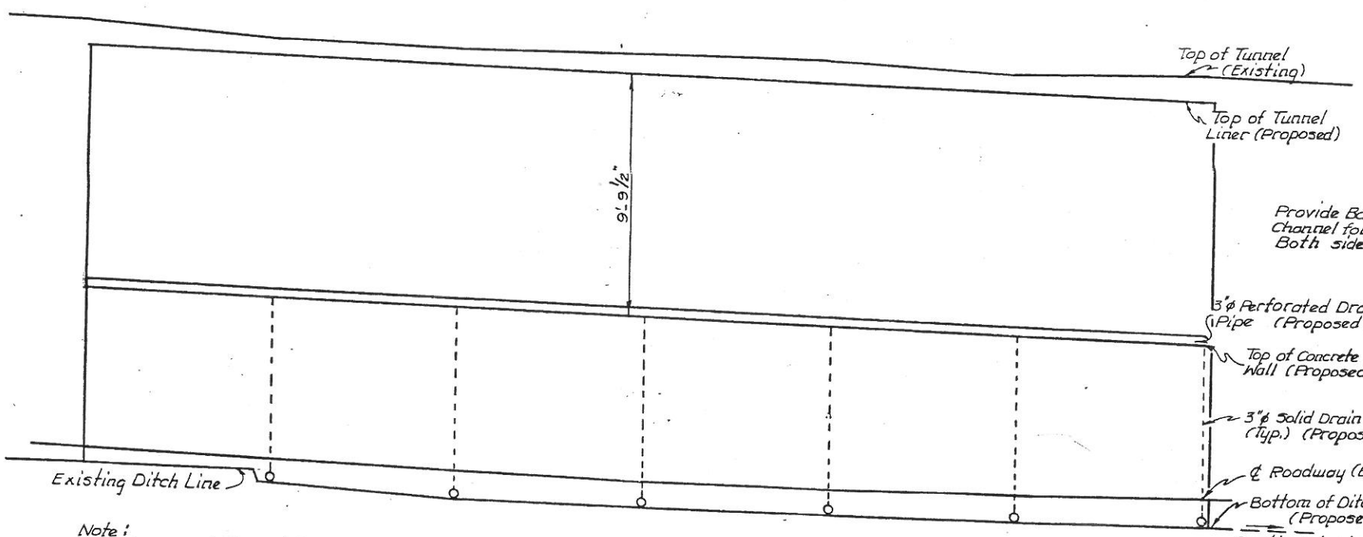

Note:
Lower existing ditch line 6" from Station 2+70 to 4+00 and far enough ahead to allow for proper drainage.

PROFILE

Scale: 1" = 3'-0" Vertical, 1" = 10'-0" Horizontal

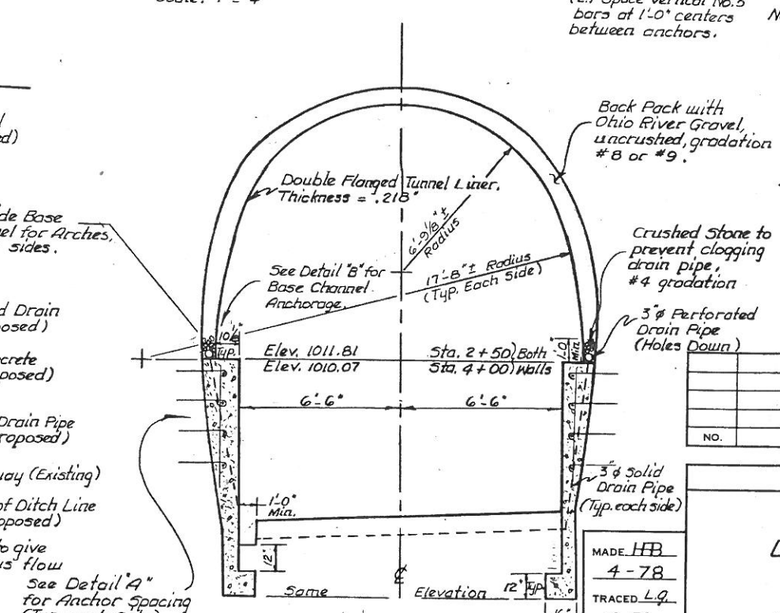

TYPICAL SECTION

Scale: 1" = 3'-0"

NO.	REVISION

TUNNEL LINING

DINGESS TUNNEL RFPA

W. VA. DEPAR

MADE HFB 4-78
TRACED LG 4-78
CKD.
CKD.

Project No. 430-

SHEET OF