INDEX TO DETAIL SHEET 1 OF 2

SERIES	NAME	DESCRIPTION	REVISION DATE
1000 SERIES FRAMING PLAN			
	1000FR1	STEEL SUPER 4 BEAM NO SKEW	PUB MTG 9/16
	1000FR2	STEEL SUPER 4 BEAM RF SKEW	PUB MTG 9/16
	1000FR3	STEEL SUPER 4 BEAM LF SKEW	PUB MTG 9/16
	1000FR4	STEEL SUPER 5 BEAM NO SKEW	PUB MTG 9/16
	1000FR5	STEEL SUPER 5 BEAM RF SKEW	PUB MTG 9/16
	1000FR6	STEEL SUPER 5 BEAM LF SKEW	PUB MTG 9/16
	1000FR7	MISCELLANEOUS STEEL DETAILS	PUB MTG 9/16
	1010FR1	CONCRETE ADJACENT BOX BEAM NO SKEW	UNDER CONST.
	1010FR2	CONCRETE ADJACENT BOX BEAM RF SKEW	UNDER CONST.
	1010FR3	CONCRETE ADJACENT BOX BEAM LF SKEW	UNDER CONST.
	1010FR4		
	1010FR5	ADJACENT BOX BEAM TL-2 GUARDRAIL DETAILS	UNDER CONST.
	1020FR1	CONCRETE SPREAD BOX 4 BEAM NO SKEW	UNDER CONST.
	1020FR2	CONCRETE SPREAD BOX 4 BEAM RF SKEW	UNDER CONST.
	1020FR3	CONCRETE SPREAD BOX 4 BEAM LF SKEW	UNDER CONST.
	1020FR4	CONCRETE SPREAD BOX 5 BEAM NO SKEW	UNDER CONST.
	1020FR5	CONCRETE SPREAD BOX 5 BEAM RF SKEW	UNDER CONST.
	1020FR6	CONCRETE SPREAD BOX 5 BEAM LF SKEW	UNDER CONST.
1100 SERIES DIAPHRAGMS			
	1100DI1	ABUTMENT DIAPHRAGMS	UNDER CONST.
	1100DI2	INTERMEDIATE DIAPHRAGMS K BRACE	UNDER CONST.
	1100DI3	INTERMEDIATE DIAPHRAGMS X BRACE	UNDER CONST.
	1100DI4	INTERMEDIATE DIAPHRAGMS C CHANNEL	UNDER CONST.
1200 SERIES DECK LAYOUT			
	1200DK1	DECK LAYOUT NO SKEW NO SIDEWALK	UNDER CONST.
	1200DK2	DECK LAYOUT RF SKEW NO SIDEWALK	UNDER CONST.
	1200DK3	DECK LAYOUT LF SKEW NO SIDEWALK	UNDER CONST.
	1210DK1		
	1210DK2		
	1210DK3		
1300 SERIES TYPICAL SECTION			
	1300TY1	TYPICAL SECTION 4 BEAM NORMAL CROWN	PUB MTG 9/16
	1300TY2	TYPICAL SECTION 4 BEAM SUPER RIGHT	PUB MTG 9/16
	1300TY3	TYPICAL SECTION 4 BEAM SUPER LEFT	PUB MTG 9/16
	1300TY4	TYPICAL SECTION 5 BEAM NORMAL CROWN	PUB MTG 9/16
	1300TY5	TYPICAL SECTION 5 BEAM SUPER RIGHT	PUB MTG 9/16
	1300TY6	TYPICAL SECTION 5 BEAM SUPER LEFT	PUB MTG 9/16
1400 SERIES END ZONE			
	1400EZ1	END ZONE LAYOUT NO SKEW	UNDER CONST.
	1400EZ2	END ZONE LAYOUT RF SKEW	UNDER CONST.
	1400EZ3	END ZONE LAYOUT LF SKEW	UNDER CONST.
1500 SERIES APPROACH SLAB			
	1500AS1	APPROACH SLAB LAYOUT NO SKEW	UNDER CONST.
	1500AS2	APPROACH SLAB LAYOUT RF SKEW	UNDER CONST.
	1500AS3	APPROACH SLAB LAYOUT LF SKEW	UNDER CONST.

SERIES	NAME	DESCRIPTION	REVISION DATE
1600 SERIES BARRIER			
	1600BA1	BARRIER LAYOUT NO SKEW	UNDER CONST.
	1600BA2	BARRIER LAYOUT RF SKEW	UNDER CONST.
	1600BA3	BARRIER LAYOUT LF SKEW	UNDER CONST.
	1600BA4	BARRIER TRANSITION ON APPROACH SLAB	UNDER CONST.
1700 SERIES SLEEPER SLAB			
	1700SS1	SLEEPER SLAB LAYOUT NO SKEW (1 OF 2)	UNDER CONST.
	1700SS2	SLEEPER SLAB LAYOUT RF SKEW (1 OF 2)	UNDER CONST.
	1700SS3	SLEEPER SLAB LAYOUT LF SKEW (1 OF 2)	UNDER CONST.
	1700SS4	SLEEPER SLAB MISCELLANEOUS DETAILS (2 OF 2)	UNDER CONST.
	1710SS5	REINFORCED BACKFILL DETAILS (1 OF 2)	UNDER CONST.
	1710SS6	REINFORCED BACKFILL DETAILS (2 OF 2)	UNDER CONST.
1800 SERIES BEARINGS			
1900 SERIES MISCELLANEOUS			
	1900 NO SKEW	SUPERSTRUCTURE FORMULA SHEET	UNDER CONST.
	1900 SKEWED	SUPERSTRUCTURE FORMULA SHEET	UNDER CONST.
2000 SUBSTRUCTURE CATEGORY			
3000 CONCRETE BEAM CATEGORY			
3000 ADJACENT BOX BEAM DETAILS			
	3000BB1	STANDARD BEAM NOTES	UNDER CONST.
	3000BB2	MISCELLANEOUS BEAM DETAILS 1 of 3	UNDER CONST.
	3000BB3	MISCELLANEOUS BEAM DETAILS 2 of 3	UNDER CONST.
	3000BB4	MISCELLANEOUS BEAM DETAILS 3 of 3	UNDER CONST.
	BR-S12A	12" PRESTRESSED PLANK BEAM DESIGN AND ASSEMBLY DETAILS	9/96
	BR-S12B	DESIGN TABLE FOR 12" PRESTRESSED PLANK BEAM	9/96
	BR-B17A	17" PRESTRESSED BOX BEAM DESIGN AND ASSEMBLY DETAILS	10/25/07
	BR-B17B	DESIGN TABLE FOR 17" PRESTRESSED BOX BEAM	7/1/10
	BR-B21A	21" PRESTRESSED BOX BEAM DESIGN AND ASSEMBLY DETAILS	10/25/07
	BR-B21B	DESIGN TABLE FOR 21" PRESTRESSED BOX BEAM	7/1/10
	BR-B27A	27" PRESTRESSED BOX BEAM DESIGN AND ASSEMBLY DETAILS	10/25/07
	BR-B27B	DESIGN TABLE FOR 27" PRESTRESSED BOX BEAM	7/1/10
	BR-B33A	33" PRESTRESSED BOX BEAM DESIGN AND ASSEMBLY DETAILS	10/25/07
	BR-B33B	DESIGN TABLE FOR 33" PRESTRESSED BOX BEAM	7/1/10
	BR-B39A	39" PRESTRESSED BOX BEAM DESIGN AND ASSEMBLY DETAILS	10/25/07
	BR-B39B	DESIGN TABLE FOR 39" PRESTRESSED BOX BEAM	7/1/10
	BR-B42A	42" PRESTRESSED BOX BEAM DESIGN AND ASSEMBLY DETAILS	10/25/07
	BR-B42B	DESIGN TABLE FOR 42" PRESTRESSED BOX BEAM	7/1/10

INDEX TO DETAIL SHEET 2 OF 2

SERIES	NAME	DESCRIPTION	REVISION DATE
3100 SPREAD BOX BEAM DETAILS			
	BRD-B 17X36	17"X36" P.C. SPREAD BOX BEAM	12/18/2006
	BRD-B 21X36	21"X36" P.C. SPREAD BOX BEAM	12/18/2006
	BRD-B 27X36	27"X36" P.C. SPREAD BOX BEAM	12/18/2006
	BRD-B 33X36	33"X36" P.C. SPREAD BOX BEAM	12/18/2006
	BRD-B 39X36	39"X36" P.C. SPREAD BOX BEAM	12/18/2006
	BRD-B 42X36	42"X36" P.C. SPREAD BOX BEAM	12/18/2006
	BRD-B 17X48	17"X48" P.C. SPREAD BOX BEAM	APPROVED
	BRD-B 21X48	21"X48" P.C. SPREAD BOX BEAM	9/22/2008
	BRD-B 27X48	27"X48" P.C. SPREAD BOX BEAM	9/22/2008
	BRD-B 33X48	33"X48" P.C. SPREAD BOX BEAM	9/22/2008
	BRD-B 39X48	39"X48" P.C. SPREAD BOX BEAM	9/22/2008
	BRD-B 42X48	42"X48" P.C. SPREAD BOX BEAM	9/22/2008
3200 AASHTO BEAM DETAILS			
	BRD-II 36X12	AASHTO TYPE II 36" PRECAST CONCRETE BEAM	APPROVED
	BRD-III 45X16	AASHTO TYPE III 45" PRECAST CONCRETE BEAM	8/1/2010
	BRD-IV 54X20	AASHTO TYPE IV 54" PRECAST CONCRETE BEAM	12/18/2006
	BRD-IVJ 60X37	AASHTO TYPE IV-J PC BEAM 60" DEEP, 37" TOP FLANGE	12/18/2006
	BRD-IVJ 60X43	AASHTO TYPE IV-J PC BEAM 60" DEEP, 43" TOP FLANGE	12/18/2006
	BRD-IVJ 60X49	AASHTO TYPE IV-J PC BEAM 60" DEEP, 49" TOP FLANGE	12/18/2006
	BRD-IVJ 60X61	AASHTO TYPE IV-J PC BEAM 60" DEEP, 61" TOP FLANGE	12/18/2006
	BRD-IVJ 66X37	AASHTO TYPE IV-J PC BEAM 66" DEEP, 37" TOP FLANGE	12/18/2006
	BRD-IVJ 66X43	AASHTO TYPE IV-J PC BEAM 66" DEEP, 49" TOP FLANGE	12/18/2006
	BRD-IVJ 66X49	AASHTO TYPE IV-J PC BEAM 66" DEEP, 49" TOP FLANGE	12/18/2006
	BRD-IVJ 66X61	AASHTO TYPE IV-J PC BEAM 66" DEEP, 61" TOP FLANGE	12/18/2006
	BRD-IVJ 72X37	AASHTO TYPE IV-J PC BEAM 72" DEEP, 37" TOP FLANGE	12/18/2006
	BRD-IVJ 72X43	AASHTO TYPE IV-J PC BEAM 72" DEEP, 43" TOP FLANGE	12/18/2006
	BRD-IVJ 72X49	AASHTO TYPE IV-J PC BEAM 72" DEEP, 49" TOP FLANGE	12/18/2006
	BRD-IVJ 72X61	AASHTO TYPE IV-J PC BEAM 72" DEEP, 61" TOP FLANGE	12/18/2006
	BRD-IVJ 78X37	AASHTO TYPE IV-J PC BEAM 78" DEEP, 37" TOP FLANGE	12/18/2006
	BRD-IVJ 78X43	AASHTO TYPE IV-J PC BEAM 78" DEEP, 43" TOP FLANGE	12/18/2006
	BRD-IVJ 78X49	AASHTO TYPE IV-J PC BEAM 78" DEEP, 49" TOP FLANGE	12/18/2006
	BRD-IVJ 78X61	AASHTO TYPE IV-J PC BEAM 78" DEEP, 61" TOP FLANGE	12/18/2006
	BRD-IVJ 84X37	AASHTO TYPE IV-J PC BEAM 84" DEEP, 37" TOP FLANGE	12/18/2006
	BRD-IVJ 84X43	AASHTO TYPE IV-J PC BEAM 84" DEEP, 43" TOP FLANGE	12/18/2006
	BRD-IVJ 84X49	AASHTO TYPE IV-J PC BEAM 84" DEEP, 49" TOP FLANGE	12/18/2006
	BRD-IVJ 84X61	AASHTO TYPE IV-J PC BEAM 84" DEEP, 61" TOP FLANGE	12/18/2006
	BRD-IVM 60X36	AASHTO TYPE IV MODIFIED 60" PRECAST CONCRETE BEAM	12/18/2006
	BRD-IVM 66X36	AASHTO TYPE IV MODIFIED 66" PRECAST CONCRETE BEAM	12/18/2006
	BRD-IVM 72X36	AASHTO TYPE IV MODIFIED 72" PRECAST CONCRETE BEAM	12/18/2006
	BRD-IVM 78X36	AASHTO TYPE IV MODIFIED 78" PRECAST CONCRETE BEAM	12/18/2006
	BRD-IVM 84X36	AASHTO TYPE IV MODIFIED 84" PRECAST CONCRETE BEAM	12/18/2006

SERIES	NAME	DESCRIPTION	REVISION DATE
4000 CONCRETE BOX CULVERT CATEGORY			
5000 MISCELLANEOUS CATEGORY			
	5000RB1	REINFORCED BACKFILL LESS THAN 2"	UNDER CONST.
	5000RB2	REINFORCED BACKFILL GREATER THAN 2"	UNDER CONST.
	5000RB3	REINFORCED BACKFILL TRANSVERSE DETAILS	UNDER CONST.
	5000RB4	GENERAL SLEEPER SLAB DETAILS	UNDER CONST.
	5000RB5	GENERAL SLEEPER SLAB JOINT DETAILS	UNDER CONST.
	5010RA1	RAILING DETAILS	UNDER CONST.
	BR-DD1	DECK DRAIN DETAILS FOR AASHTO TYPE IV PRECAST PC DEAM SUPERSTRUCTURE	9/22/2008
	BR-DD2	DECK DRAIN DETAILS FOR AASHTO TYPE IV MODIFIED PRECAST PC BEAM SUPERSTRUCTURE	9/22/2008
	BR-DD3	DECK DRAIN DETAILS FOR PRECAST PC BOX BEAM SUPERSTRUCTURE	9/22/2008
	BR-DD4	DECK DRAIN DETAILS FOR STEEL SUPERSTRUCTURE	9/22/2008

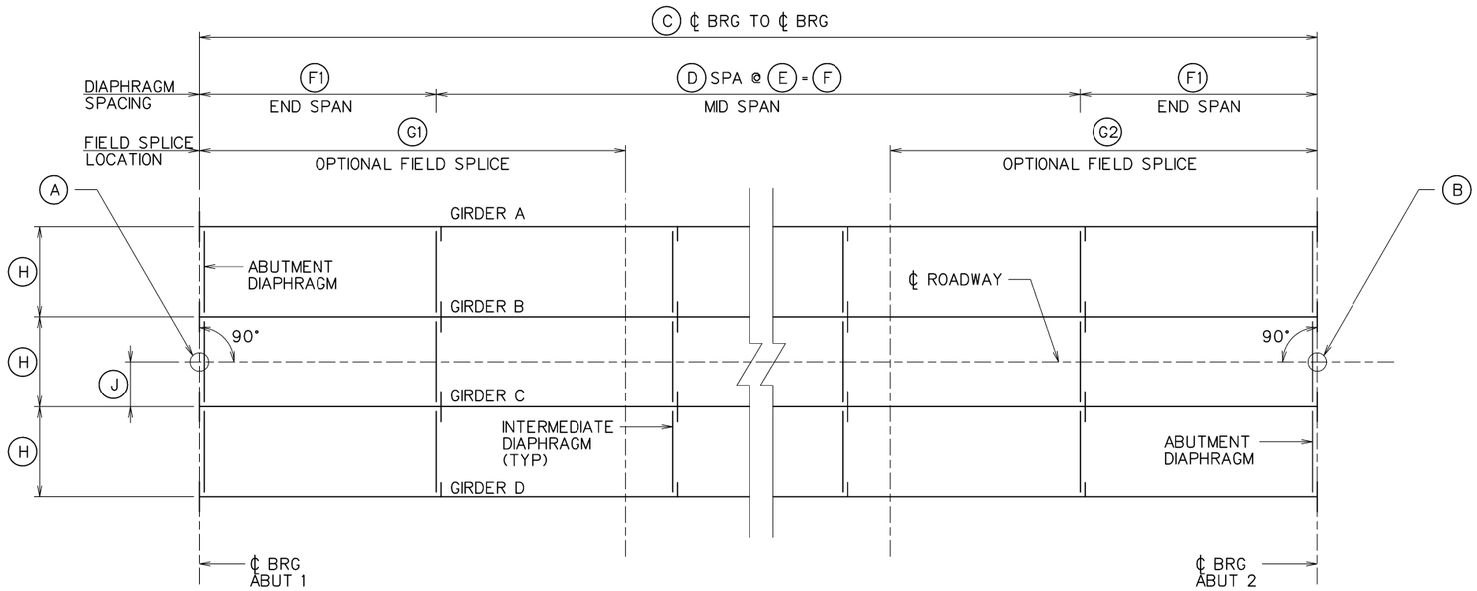

FRAMING PLAN

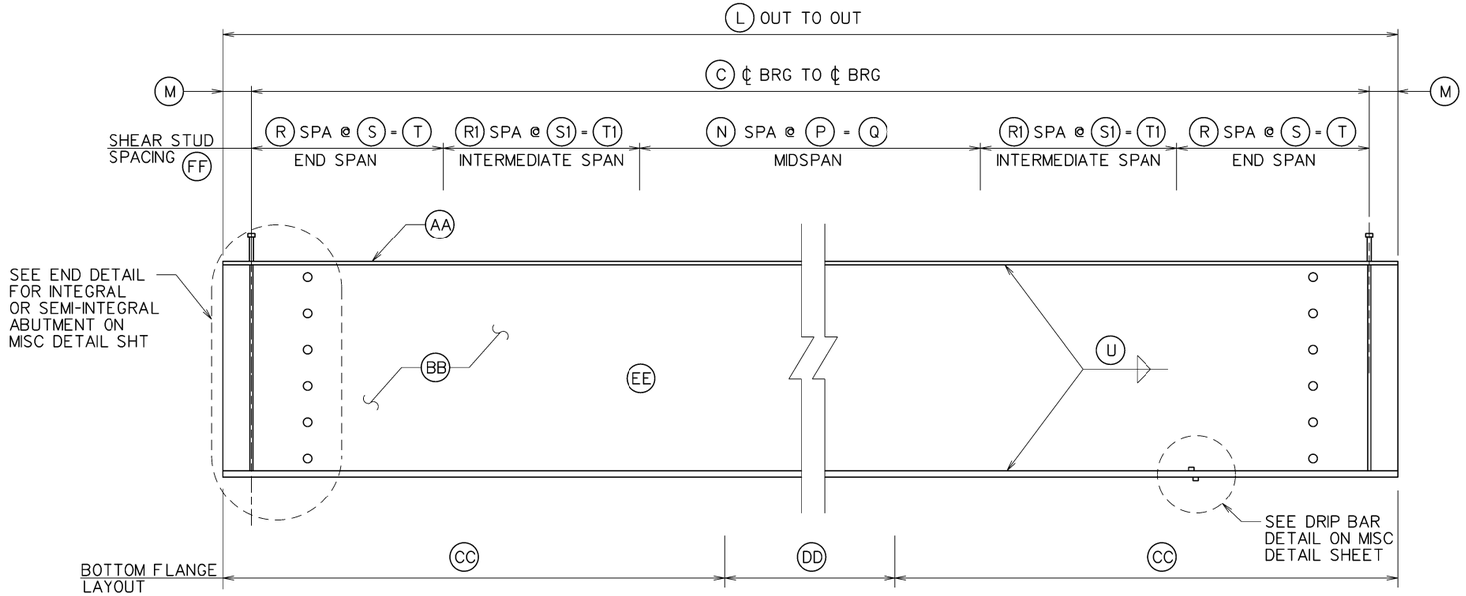

ELEVATION

FRAMING PLAN CONTROL POINTS		
CODE	DESCRIPTION	DIMENSION
A	WP STA	
B	WP STA	
C	BEARING TO BEARING LENGTH	
D	NUMBER OF MID SPAN DIAPHRAGM SPACES	
E	MID SPAN DIAPHRAGM SPACING	
F	MID SPAN DIAPHRAGM LENGTH	
F1	END SPAN DIAPHRAGM LENGTH	
G1	LOCATION OF FIELD SPLICE FROM WORK POINT A	
G2	LOCATION OF FIELD SPLICE FROM WORK POINT B	
H	BEAM SPACING	
J	OFFSET FROM ℄	

BEAM CONTROL POINTS		
CODE	DESCRIPTION	DIMENSION
L	OVERALL BEAM LENGTH	
M	BEGINNING OFFSET	
N	NUMBER OF SHEAR STUD SPACING	
P	SHEER STUD SPACING	
Q	LENGTH OF MIDSPAN SHEAR STUDS	
R	NUMBER OF END SPAN SHEAR STUD SPACES	
R1	NUMBER OF INTERMEDIATE SPAN SHEAR STUD SPACES	
S	END SPAN SHEAR STUD SPACING	
S1	INTERMEDIATE SPAN SHEAR STUD SPACING	
T	LENGTH OF END SPAN SHEAR STUD	
T1	LENGTH OF INTERMEDIATE SPAN SHEAR STUD	
U	WELD	

STEEL BEAM DIMENSIONS				
CODE	DESCRIPTION	PLATE DIM.	LENGTH	Fy
AA	TOP PLATE			
BB	WEB PLATE			
CC	BOTTOM PLATE ENDSPAN			
DD	BOTTOM PLATE MIDSPAN			
	OR			
EE	W BEAM			
QUANTITES				
FF	NUMBER OF SHEAR STUDS PER GIRDER			

NOT TO SCALE

18-AUG-2016 15:06

NO.	REVISION	DATE	BY

WEST VIRGINIA DEPARTMENT OF TRANSPORTATION
DIVISION OF HIGHWAYS
ENGINEERING DIVISION

DESIGNED	DATE	CHECKED	DATE
DRAWN	DATE	REVIEWED	DATE

STANDARD BRIDGE PLANS

STEEL SUPER 4 BEAM NO SKEW

SHEET NUMBER 1000FR1

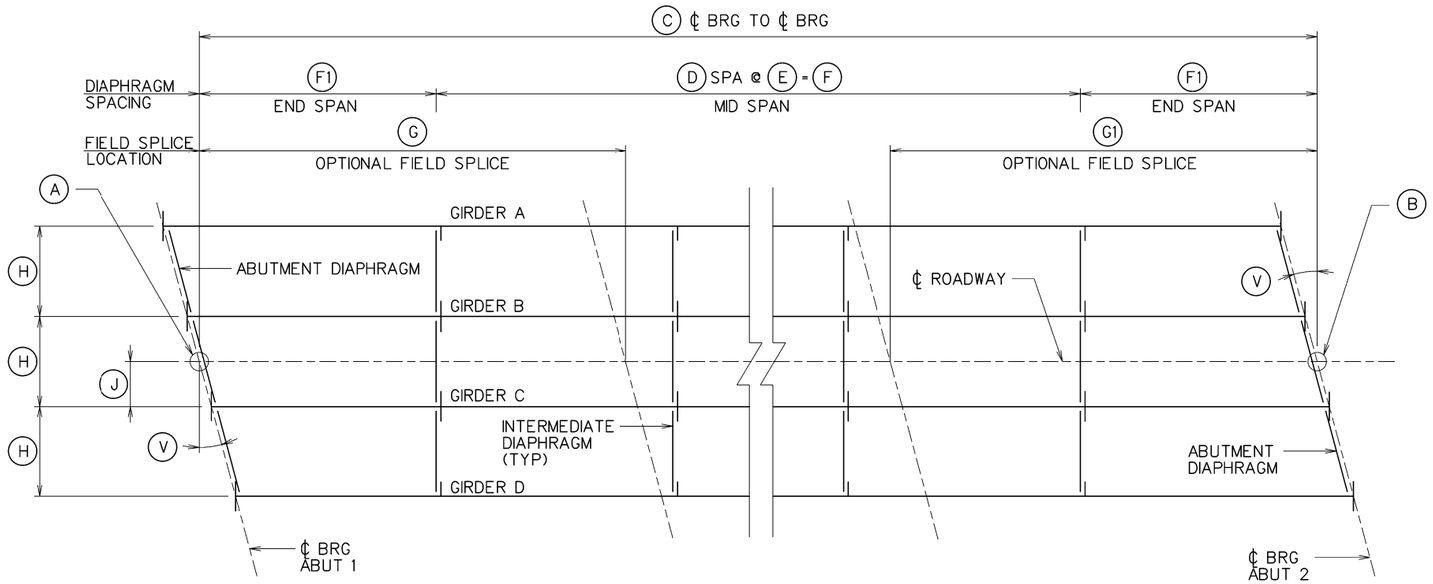

FRAMING PLAN

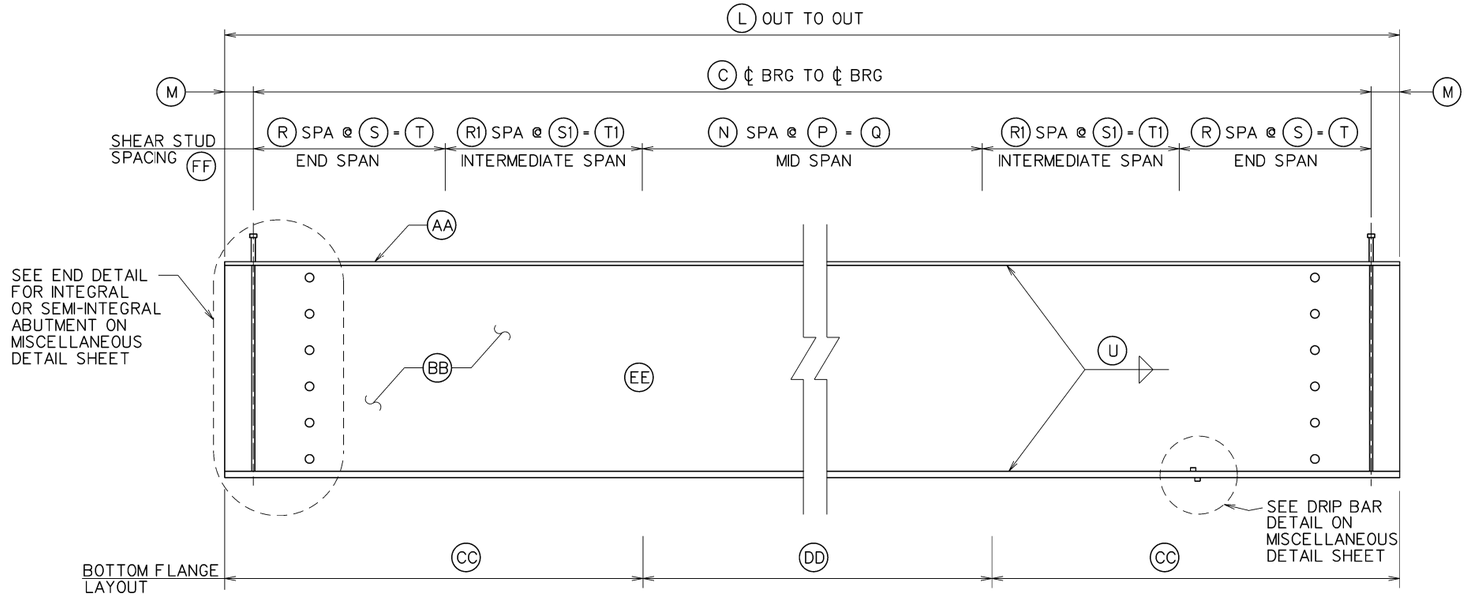

ELEVATION

FRAMING PLAN CONTROL POINTS		
CODE	DESCRIPTION	DIMENSION
A	WP STA	_____
B	WP STA	_____
C	BEARING TO BEARING LENGTH	_____
D	NUMBER OF MID SPAN DIAPHRAGM SPACES	_____
E	MID SPAN DIAPHRAGM SPACING	_____
F	MID SPAN DIAPHRAGM LENGTH	_____
F1	END SPAN DIAPHRAGM LENGTH	_____
G	LOCATION OF FIELD SPLICE FROM WORK POINT A	_____
G1	LOCATION OF FIELD SPLICE FROM WORK POINT B	_____
H	BEAM SPACING	_____
J	OFFSET FROM ℄	_____
V	SKEW	_____

BEAM CONTROL POINTS		
CODE	DESCRIPTION	DIMENSION
L	OVERALL BEAM LENGTH	_____
M	BEGINNING OFFSET	_____
N	NUMBER OF MID SPAN SHEAR STUD SPACING	_____
P	SHEAR STUD SPACING	_____
Q	LENGTH OF MID SPAN SHEAR STUDS	_____
R	NUMBER OF END SPAN SHEAR STUD SPACES	_____
R1	NUMBER OF INTERMEDIATE SPAN SHEAR STUD SPACES	_____
S	END SPAN SHEAR STUD SPACING	_____
S1	INTERMEDIATE SPAN SHEAR STUD SPACING	_____
T	LENGTH OF END SPAN SHEAR STUD	_____
T1	LENGTH OF INTERMEDIATE SPAN SHEAR STUD	_____
U	WELD	_____

STEEL BEAM DIMENSIONS				
CODE	DESCRIPTION	PLATE DIM.	LENGTH	Fy
AA	TOP PLATE	_____	_____	_____
BB	WEB PLATE	_____	_____	_____
CC	BOTTOM PLATE END SPAN	_____	_____	_____
DD	BOTTOM PLATE MID SPAN	_____	_____	_____
	OR			
EE	W BEAM	_____	_____	_____
QUANTITES				
FF	NUMBER OF SHEAR STUDS PER GIRDER			_____

NOT TO SCALE

18-AUG-2016 15:06

NO.	REVISION	DATE	BY

WEST VIRGINIA DEPARTMENT OF TRANSPORTATION
DIVISION OF HIGHWAYS
ENGINEERING DIVISION

DESIGNED	DATE	CHECKED	DATE
_____	_____	_____	_____
DRAWN	DATE	REVIEWED	DATE
_____	_____	_____	_____

STANDARD BRIDGE PLANS

STEEL SUPER 4 BEAM RF SKEW

SHEET NUMBER 1000FR2

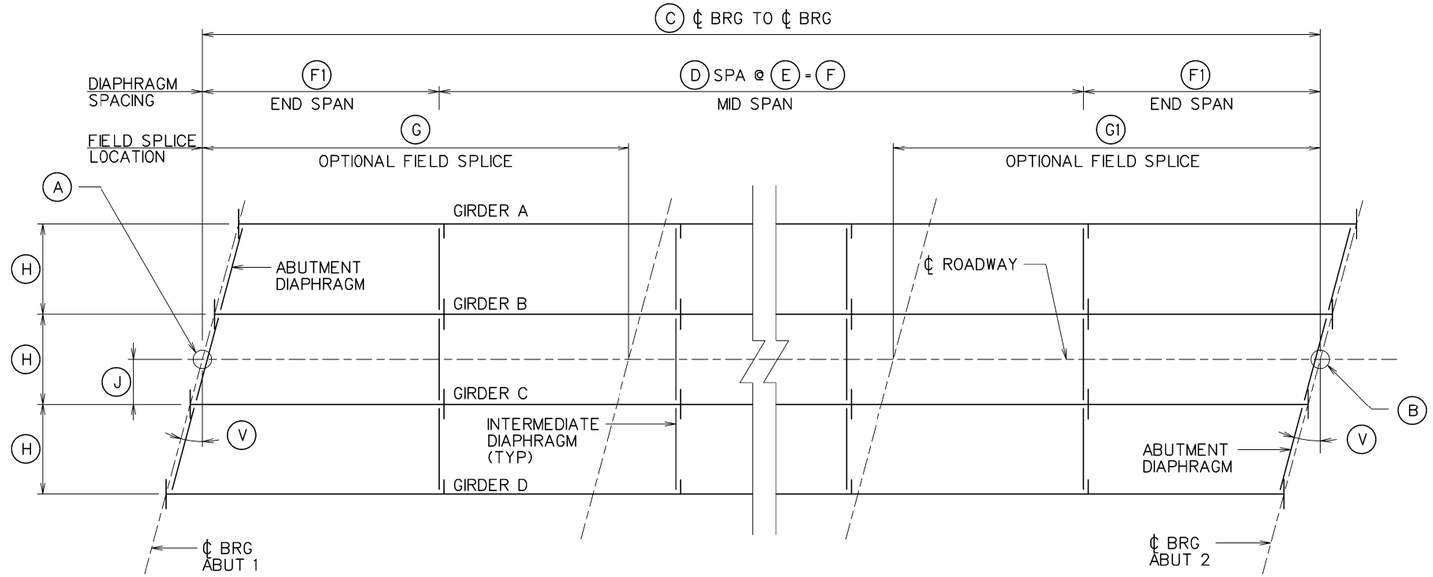

FRAMING PLAN

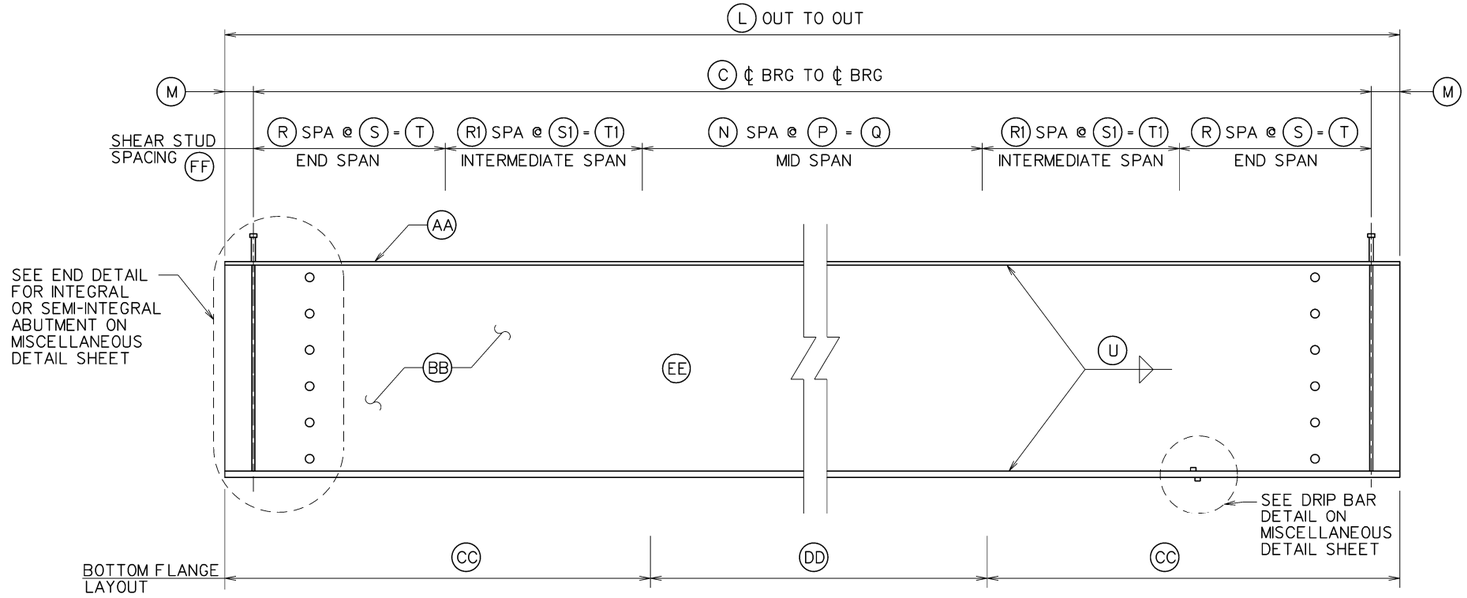

ELEVATION

FRAMING PLAN CONTROL POINTS		
CODE	DESCRIPTION	DIMENSION
A	WP STA	_____
B	WP STA	_____
C	BEARING TO BEARING LENGTH	_____
D	NUMBER OF MID SPAN DIAPHRAGM SPACES	_____
E	MID SPAN DIAPHRAGM SPACING	_____
F	MID SPAN DIAPHRAGM LENGTH	_____
F1	END SPAN DIAPHRAGM LENGTH	_____
G	LOCATION OF FIELD SPLICE FROM WORK POINT A	_____
G1	LOCATION OF FIELD SPLICE FROM WORK POINT B	_____
H	BEAM SPACING	_____
J	OFFSET FROM ℄	_____
V	SKEW	_____

BEAM CONTROL POINTS		
CODE	DESCRIPTION	DIMENSION
L	OVERALL BEAM LENGTH	_____
M	BEGINNING OFFSET	_____
N	NUMBER OF MID SPAN SHEAR STUD SPACING	_____
P	SHEAR STUD SPACING	_____
Q	LENGTH OF MID SPAN SHEAR STUDS	_____
R	NUMBER OF END SPAN SHEAR STUD SPACES	_____
R1	NUMBER OF INTERMEDIATE SPAN SHEAR STUD SPACES	_____
S	END SPAN SHEAR STUD SPACING	_____
S1	INTERMEDIATE SPAN SHEAR STUD SPACING	_____
T	LENGTH OF END SPAN SHEAR STUD	_____
T1	LENGTH OF INTERMEDIATE SPAN SHEAR STUD	_____
U	WELD	_____

STEEL BEAM DIMENSIONS				
CODE	DESCRIPTION	PLATE DIM.	LENGTH	Fy
AA	TOP PLATE	_____	_____	_____
BB	WEB PLATE	_____	_____	_____
CC	BOTTOM PLATE END SPAN	_____	_____	_____
DD	BOTTOM PLATE MID SPAN	_____	_____	_____
	OR			
EE	W BEAM	_____	_____	_____
QUANTITES				
FF	NUMBER OF SHEAR STUDS PER GIRDER			_____

NOT TO SCALE

NO.	REVISION	DATE	BY

WEST VIRGINIA DEPARTMENT OF TRANSPORTATION
DIVISION OF HIGHWAYS
ENGINEERING DIVISION

DESIGNED	DATE	CHECKED	DATE
_____	_____	_____	_____
DRAWN	DATE	REVIEWED	DATE
_____	_____	_____	_____

STANDARD BRIDGE PLANS

STEEL SUPER 4 BEAM LF SKEW

SHEET NUMBER 1000FR3

18-AUG-2016 15:06

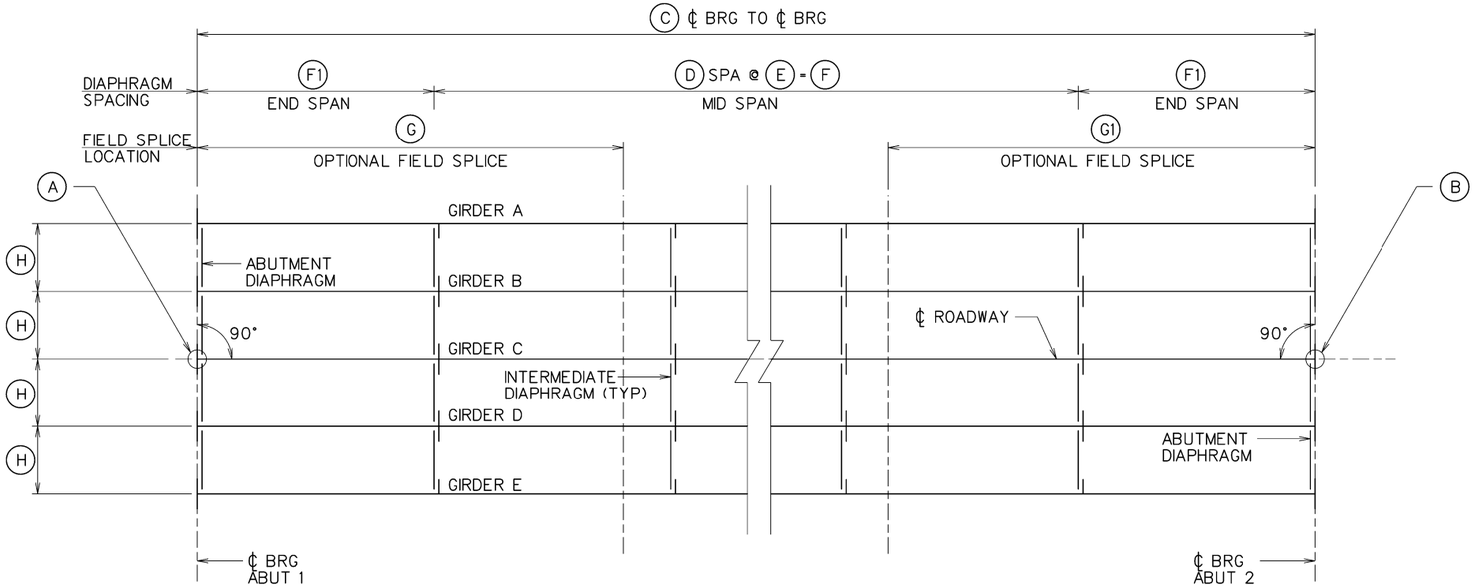

FRAMING PLAN

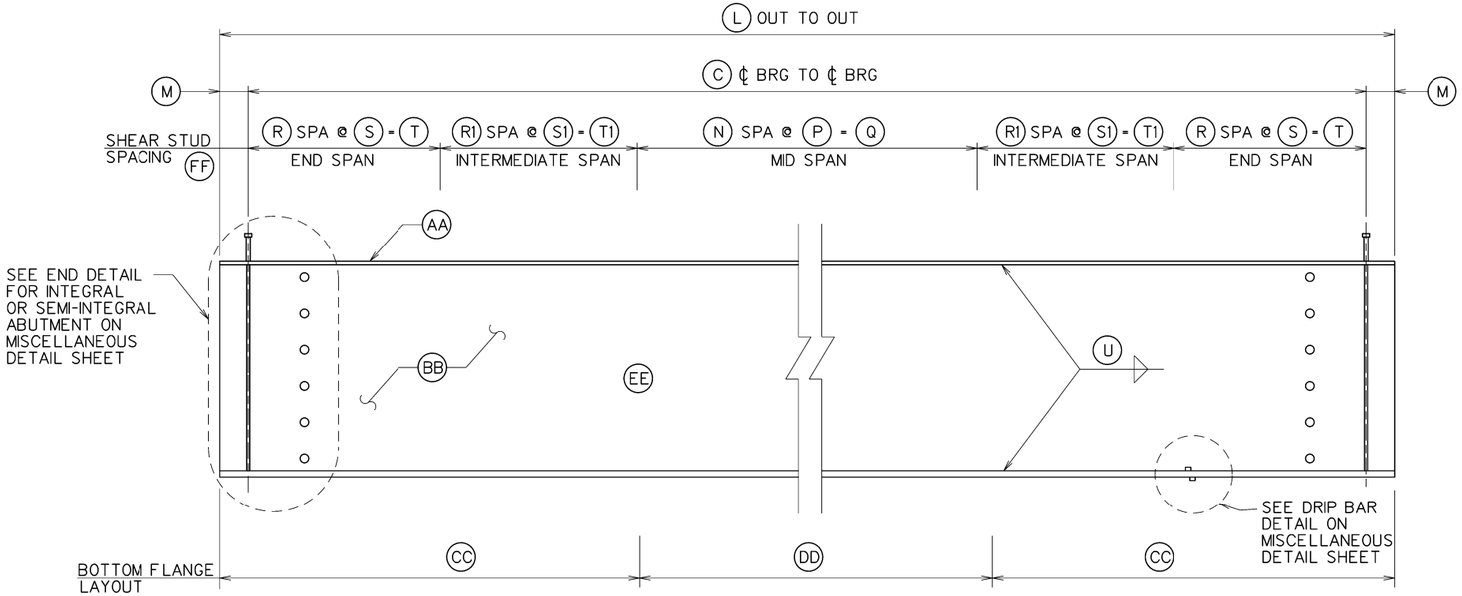

ELEVATION

FRAMING PLAN CONTROL POINTS		
CODE	DESCRIPTION	DIMENSION
A	WP STA	
B	WP STA	
C	BEARING TO BEARING LENGTH	
D	NUMBER OF MID SPAN DIAPHRAGM SPACES	
E	MID SPAN DIAPHRAGM SPACING	
F	MID SPAN DIAPHRAGM LENGTH	
F1	END SPAN DIAPHRAGM LENGTH	
G	LOCATION OF FIELD SPLICE FROM WORK POINT A	
G1	LOCATION OF FIELD SPLICE FROM WORK POINT B	
H	BEAM SPACING	

BEAM CONTROL POINTS		
CODE	DESCRIPTION	DIMENSION
L	OVERALL BEAM LENGTH	
M	BEGINNING OFFSET	
N	NUMBER OF MID SPAN SHEAR STUD SPACING	
P	SHEAR STUD SPACING	
Q	LENGTH OF MID SPAN SHEAR STUDS	
R	NUMBER OF END SPAN SHEAR STUD SPACES	
R1	NUMBER OF INTERMEDIATE SPAN SHEAR STUD SPACES	
S	END SPAN SHEAR STUD SPACING	
S1	INTERMEDIATE SPAN SHEAR STUD SPACING	
T	LENGTH OF END SPAN SHEAR STUD	
T1	LENGTH OF INTERMEDIATE SPAN SHEAR STUD	
U	WELD	

STEEL BEAM DIMENSIONS				
CODE	DESCRIPTION	PLATE DIM.	LENGTH	Fy
AA	TOP PLATE			
BB	WEB PLATE			
CC	BOTTOM PLATE END SPAN			
DD	BOTTOM PLATE MID SPAN			
	OR			
EE	W BEAM			
QUANTITES				
FF	NUMBER OF SHEAR STUDS PER GIRDER			

NOT TO SCALE

NO.	REVISION	DATE	BY

WEST VIRGINIA DEPARTMENT OF TRANSPORTATION
DIVISION OF HIGHWAYS
ENGINEERING DIVISION

DESIGNED	DATE	CHECKED	DATE
DRAWN	DATE	REVIEWED	DATE

STANDARD BRIDGE PLANS

STEEL SUPER 5 BEAM NO SKEW

SHEET NUMBER 1000FR4

18-AUG-2016 15:07

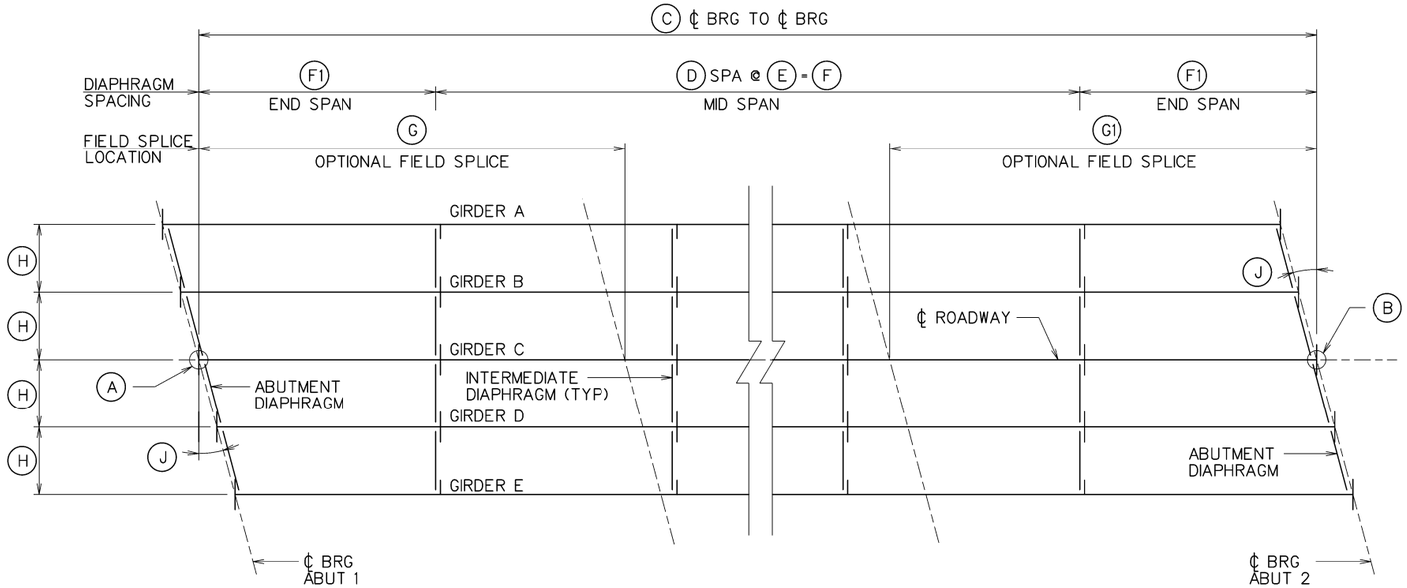

FRAMING PLAN

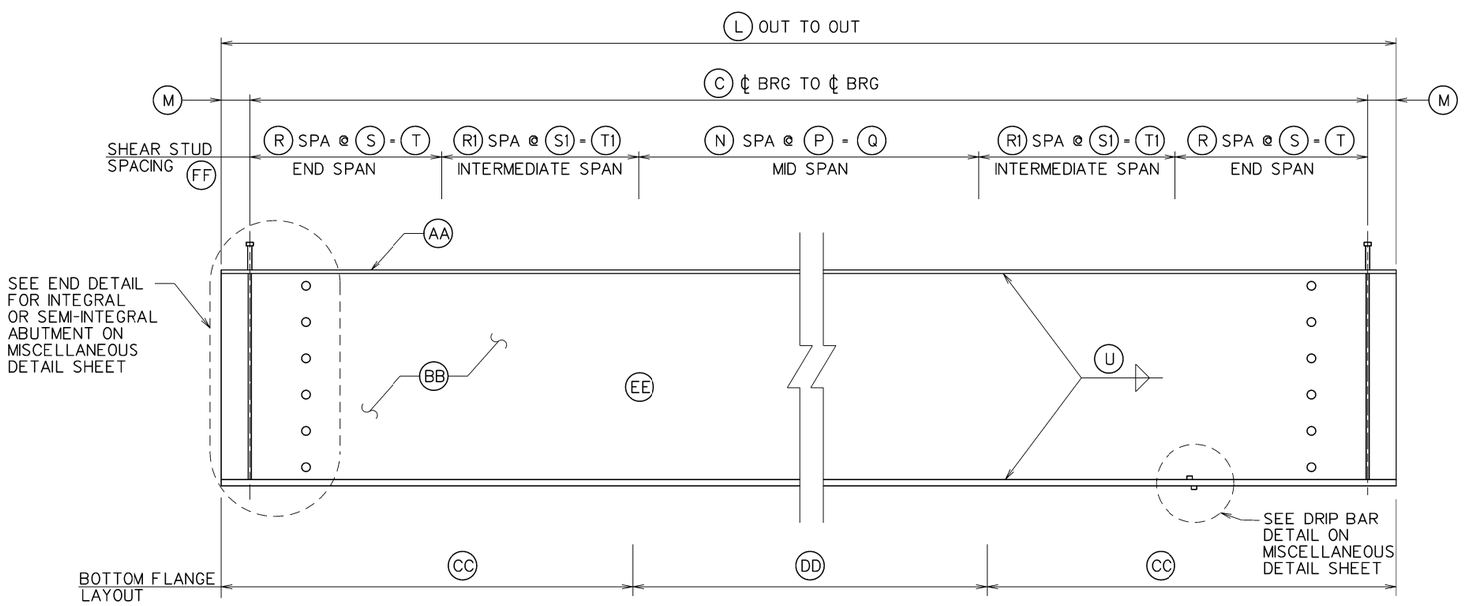

ELEVATION

FRAMING PLAN CONTROL POINTS		
CODE	DESCRIPTION	DIMENSION
A	WP STA	_____
B	WP STA	_____
C	BEARING TO BEARING LENGTH	_____
D	NUMBER OF MID SPAN DIAPHRAGM SPACES	_____
E	MID SPAN DIAPHRAGM SPACING	_____
F	MID SPAN DIAPHRAGM LENGTH	_____
F1	END SPAN DIAPHRAGM LENGTH	_____
G	LOCATION OF FIELD SPLICE FROM WORK POINT A	_____
G1	LOCATION OF FIELD SPLICE FROM WORK POINT B	_____
H	BEAM SPACING	_____
J	SKEW	_____

BEAM CONTROL POINTS		
CODE	DESCRIPTION	DIMENSION
L	OVERALL BEAM LENGTH	_____
M	BEGINNING OFFSET	_____
N	NUMBER OF MID SPAN SHEAR STUD SPACING	_____
P	SHEAR STUD SPACING	_____
Q	LENGTH OF MID SPAN SHEAR STUDS	_____
R	NUMBER OF END SPAN SHEAR STUD SPACES	_____
R1	NUMBER OF INTERMEDIATE SPAN SHEAR STUD SPACES	_____
S	END SPAN SHEAR STUD SPACING	_____
S1	INTERMEDIATE SPAN SHEAR STUD SPACING	_____
T	LENGTH OF END SPAN SHEAR STUD	_____
T1	LENGTH OF INTERMEDIATE SPAN SHEAR STUD	_____
U	WELD	_____

STEEL BEAM DIMENSIONS				
CODE	DESCRIPTION	PLATE DIM.	LENGTH	Fy
AA	TOP PLATE	_____	_____	_____
BB	WEB PLATE	_____	_____	_____
CC	BOTTOM PLATE END SPAN	_____	_____	_____
DD	BOTTOM PLATE MID SPAN	_____	_____	_____
	OR			
EE	W BEAM	_____	_____	_____
QUANTITES				
FF	NUMBER OF SHEAR STUDS PER GIRDER			_____

NOT TO SCALE

NO.	REVISION	DATE	BY

WEST VIRGINIA DEPARTMENT OF TRANSPORTATION
DIVISION OF HIGHWAYS
ENGINEERING DIVISION

DESIGNED	DATE	CHECKED	DATE
DRAWN	DATE	REVIEWED	DATE

STANDARD BRIDGE PLANS

STEEL SUPER 5 BEAM RF SKEW

SHEET NUMBER 1000FR5

18-AUG-2016 15:07

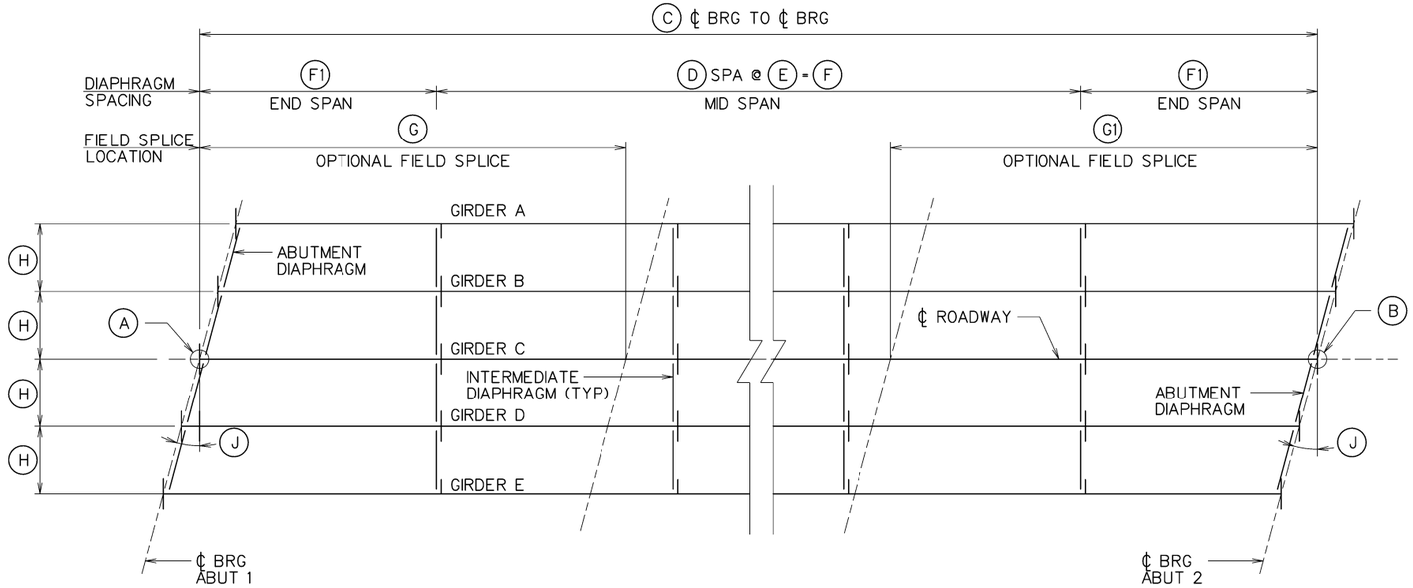

FRAMING PLAN

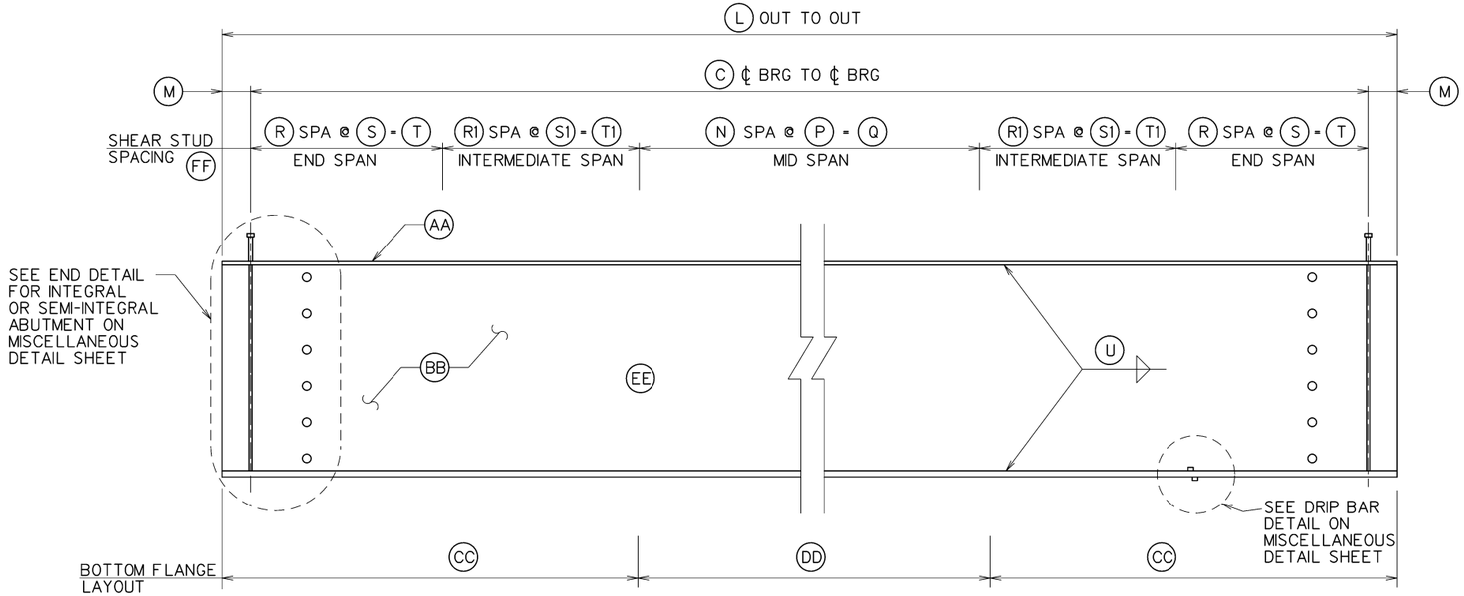

ELEVATION

FRAMING PLAN CONTROL POINTS		
CODE	DESCRIPTION	DIMENSION
A	WP STA	
B	WP STA	
C	BEARING TO BEARING LENGTH	
D	NUMBER OF MID SPAN DIAPHRAGM SPACES	
E	MID SPAN DIAPHRAGM SPACING	
F	MID SPAN DIAPHRAGM LENGTH	
F1	END SPAN DIAPHRAGM LENGTH	
G	LOCATION OF FIELD SPLICE FROM WORK POINT A	
G1	LOCATION OF FIELD SPLICE FROM WORK POINT B	
H	BEAM SPACING	
J	SKEW	

BEAM CONTROL POINTS		
CODE	DESCRIPTION	DIMENSION
L	OVERALL BEAM LENGTH	
M	BEGINNING OFFSET	
N	NUMBER OF MID SPAN SHEAR STUD SPACING	
P	SHEAR STUD SPACING	
Q	LENGTH OF MID SPAN SHEAR STUDS	
R	NUMBER OF END SPAN SHEAR STUD SPACES	
R1	NUMBER OF INTERMEDIATE SPAN SHEAR STUD SPACES	
S	END SPAN SHEAR STUD SPACING	
S1	INTERMEDIATE SPAN SHEAR STUD SPACING	
T	LENGTH OF END SPAN SHEAR STUD	
T1	LENGTH OF INTERMEDIATE SPAN SHEAR STUD	
U	WELD	

STEEL BEAM DIMENSIONS				
CODE	DESCRIPTION	PLATE DIM.	LENGTH	Fy
AA	TOP PLATE			
BB	WEB PLATE			
CC	BOTTOM PLATE END SPAN			
DD	BOTTOM PLATE MID SPAN			
	OR			
EE	W BEAM			
	QUANTITES			
FF	NUMBER OF SHEAR STUDS PER GIRDER			

NOT TO SCALE

18-AUG-2016 15:07

NO.	REVISION	DATE	BY

WEST VIRGINIA DEPARTMENT OF TRANSPORTATION
DIVISION OF HIGHWAYS
ENGINEERING DIVISION

DESIGNED	DATE	CHECKED	DATE
DRAWN	DATE	REVIEWED	DATE

STANDARD BRIDGE PLANS

STEEL SUPER 5 BEAM LF SKEW

SHEET NUMBER 1000FR6

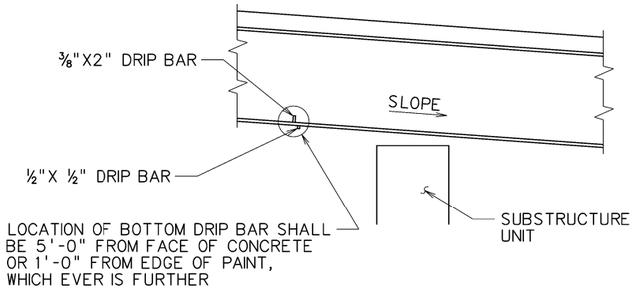

DRIP BAR LOCATION

DRIP BARS SHALL BE LOCATED ON THE UPWARD SLOPE OF ALL GIRDERS ADJACENT TO SUBSTRUCTURE UNITS.

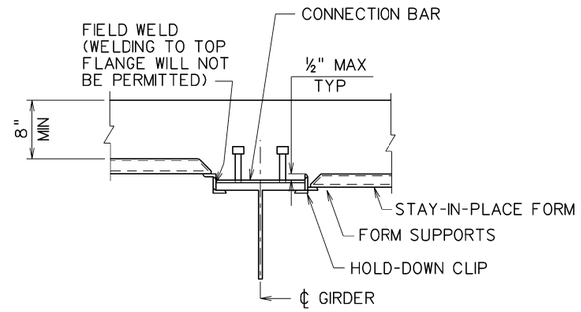

ELEVATION

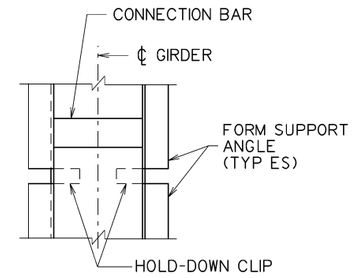

PLAN

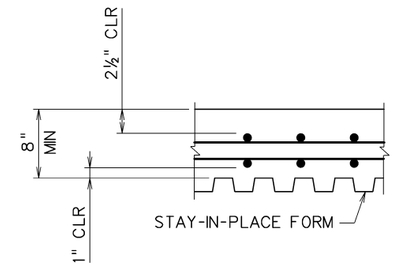

SECTION

STAY-IN-PLACE FORM

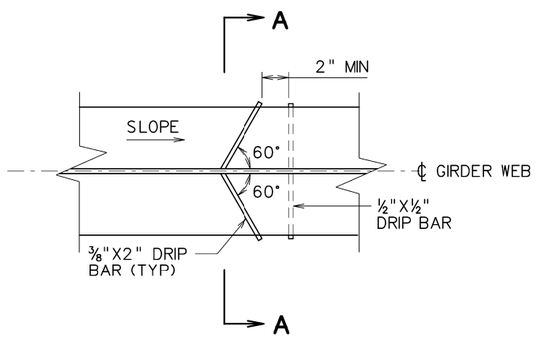

DRIP BAR DETAIL

NOTE:

DRIP BAR ON TOP OF BOTTOM FLANGE SHALL BE CAULKED AGAINST FLANGE, WEB, AND FILLET WELD WITH DARK BROWN CAULKING SUBJECT TO THE APPROVAL OF THE ENGINEER. INCLUDE COST IN ITEM 615001-001, STEEL SUPERSTRUCTURE.

CONTROL DIMENSIONS		
CODE	DESCRIPTION	DIMENSION
A	DISTANCE BETWEEN STUDS	_____
B	DISTANCE FROM CENTER LINE OF GIRDER TO STUDS	_____
C	DISTANCE FROM CENTER LINE OF BEARING TO CENTER LINE OF HOLES FOR REINFORCEMENT	_____
D	DEPTH OF WEB	_____
	SPACING	
E	NUMBER OF SPACING FOR REINFORCEMENT HOLES	_____

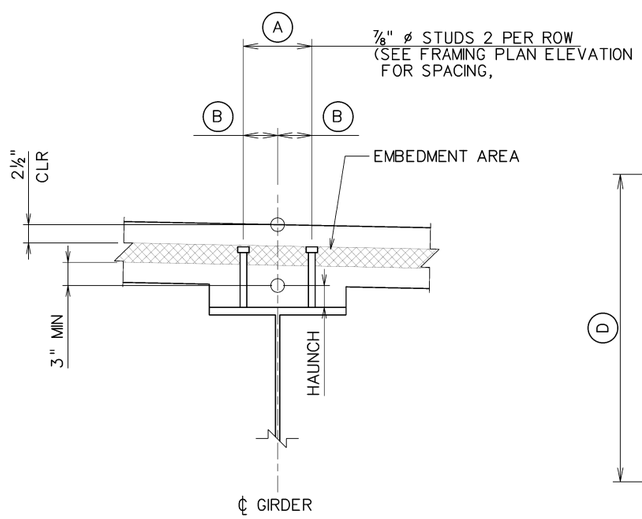

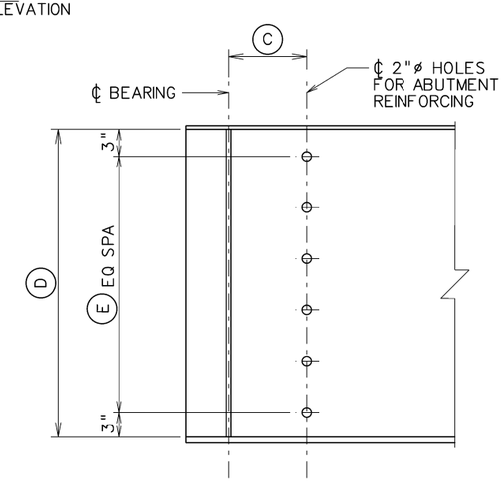

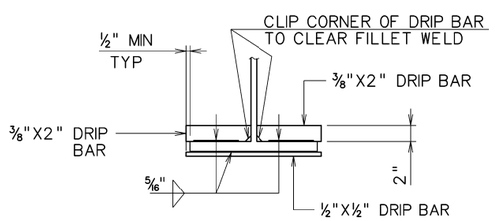

SECTION A-A

SHEAR STUD DETAIL

TYPICAL GIRDER END DETAIL

SHEET TO BE USED WITH _____ NOT TO SCALE

NO.	REVISION	DATE	BY

WEST VIRGINIA DEPARTMENT OF TRANSPORTATION
DIVISION OF HIGHWAYS
ENGINEERING DIVISION

DESIGNED	DATE	CHECKED	DATE
_____	_____	_____	_____
DRAWN	DATE	REVIEWED	DATE
_____	_____	_____	_____

STANDARD BRIDGE PLANS

MISCELLANEOUS STEEL DETAILS

SHEET NUMBER 1000FR7

18-AUG-2016 15:07

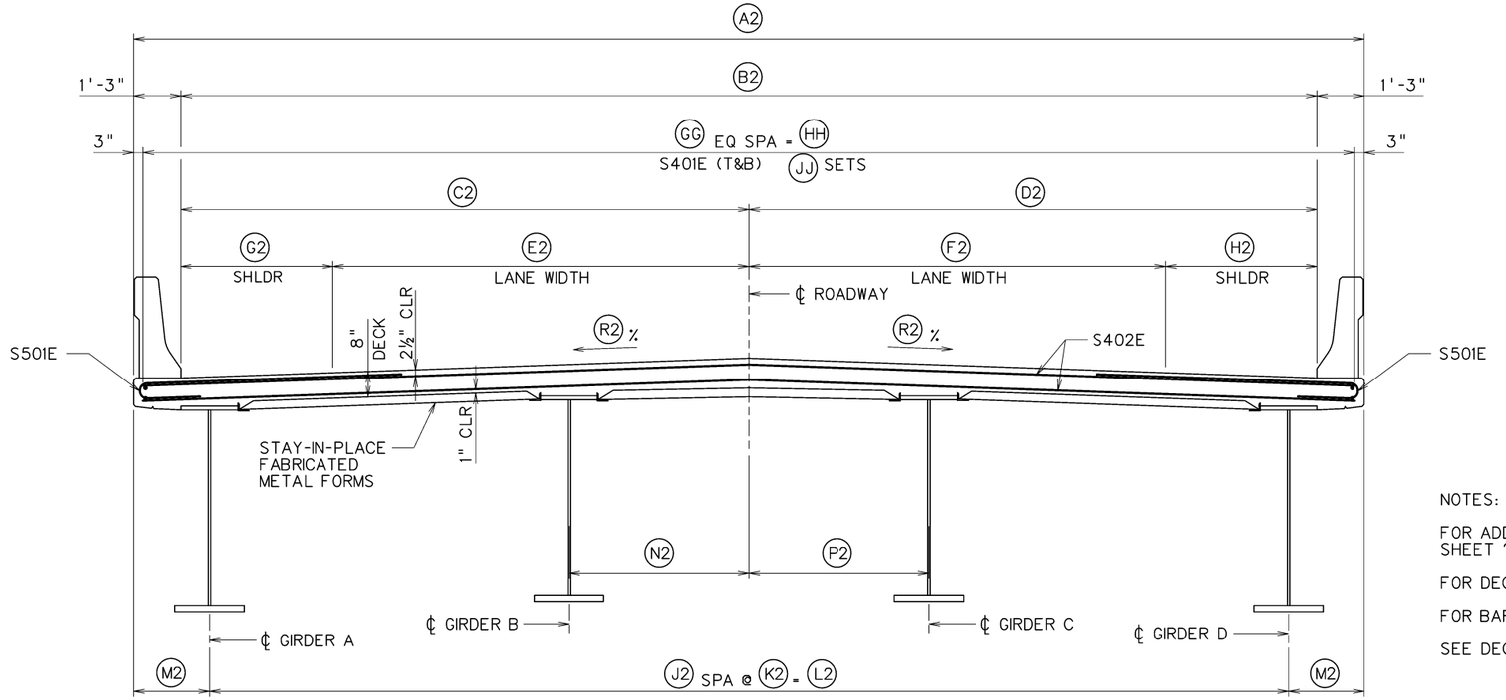

NOTES:

FOR ADDITIONAL REINFORCING, SEE "END ZONE LAYOUT", SHEET ?? OF ??.

FOR DECK NOTES, SEE SHEET ?? OF ??.

FOR BARRIER REINFORCING, SEE SHEET ?? OF ??.

SEE DECK LAYOUT FOR BILL OF REINFORCING SCHEDULE.

TYPICAL SECTION

LOOKING STATION AHEAD

TYPICAL SECTION CONTROL DIMENSIONS		
CODE	DESCRIPTION	DIMENSION
A2	OVERAL WIDTH	_____
B2	CLEAR WIDTH	_____
C2	℄ TO GUTTERLINE WIDTH (LEFT SIDE)	_____
D2	℄ TO GUTTERLINE WIDTH (RIGHT SIDE)	_____
E2	LEFT LANE WIDTH	_____
F2	RIGHT LANE WIDTH	_____
G2	LEFT SHOULDER WIDTH	_____
H2	RIGHT SHOULDER WIDTH	_____
J2	NUMBER OF SPACES	_____
K2	GIRDER SPACING	_____
L2	OVERALL WIDTH OF GIRDERS	_____
M2	OVERHANG	_____
N2	LEFT MOST INTERIOR GIRDER OFFSET FROM ℄	_____
P2	RIGHT MOST INTERIOR GIRDER OFFSET FROM ℄	_____
R2	CROSS SLOPE	_____

REBAR CONTROL DIMENSIONS		
CODE	DESCRIPTION	DIMENSION
GG	NUMBER OF EQUAL SPACES FOR TOP AND BOTTOM LONGITUDINAL REBAR	_____
HH	DISTANCE OF TOP AND BOTTOM LONGITUDINAL REBAR	_____
JJ	NUMBER OF REBAR SETS	_____

THIS SHEET TO BE USED WITH STANDARD DECK LAYOUT SHEET _____

NOT TO SCALE

NO.	REVISION	DATE	BY

WEST VIRGINIA DEPARTMENT OF TRANSPORTATION
DIVISION OF HIGHWAYS
ENGINEERING DIVISION

DESIGNED	DATE	CHECKED	DATE
DRAWN	DATE	REVIEWED	DATE

STANDARD BRIDGE PLANS
TYPICAL SECTION 4
BEAM NORMAL CROWN
SHEET NUMBER **1300TY1**

18-AUG-2016 15:07

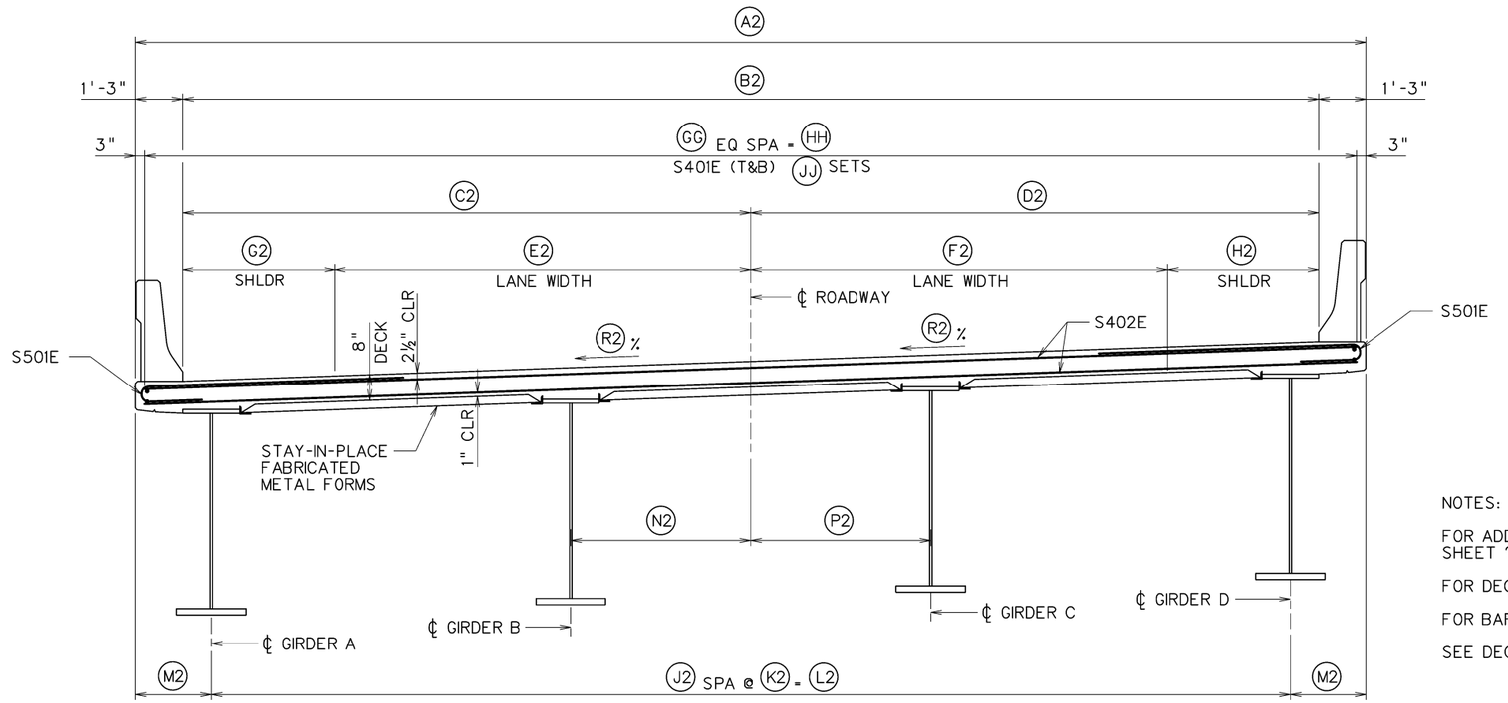

NOTES:

FOR ADDITIONAL REINFORCING, SEE "END ZONE LAYOUT", SHEET ?? OF ??.

FOR DECK NOTES, SEE SHEET ?? OF ??.

FOR BARRIER REINFORCING, SEE SHEET ?? OF ??.

SEE DECK LAYOUT FOR BILL OF REINFORCING SCHEDULE.

TYPICAL SECTION

LOOKING STATION AHEAD

TYPICAL SECTION CONTROL DIMENSIONS		
CODE	DESCRIPTION	DIMENSION
A2	OVERAL WIDTH	_____
B2	CLEAR WIDTH	_____
C2	℄ TO GUTTERLINE WIDTH (LEFT SIDE)	_____
D2	℄ TO GUTTERLINE WIDTH (RIGHT SIDE)	_____
E2	LEFT LANE WIDTH	_____
F2	RIGHT LANE WIDTH	_____
G2	LEFT SHOULDER WIDTH	_____
H2	RIGHT SHOULDER WIDTH	_____
J2	NUMBER OF SPACES	_____
K2	GIRDER SPACING	_____
L2	OVERALL WIDTH OF GIRDERS	_____
M2	OVERHANG	_____
N2	LEFT MOST INTERIOR GIRDER OFFSET FROM ℄	_____
P2	RIGHT MOST INTERIOR GIRDER OFFSET FROM ℄	_____
R2	CROSS SLOPE	_____

REBAR CONTROL DIMENSIONS		
CODE	DESCRIPTION	DIMENSION
GG	NUMBER OF EQUAL SPACES FOR TOP AND BOTTOM LONGITUDINAL REBAR	_____
HH	DISTANCE OF TOP AND BOTTOM LONGITUDINAL REBAR	_____
JJ	NUMBER OF REBAR SETS	_____

THIS SHEET TO BE USED WITH STANDARD DECK LAYOUT SHEET _____ NOT TO SCALE

NO.	REVISION	DATE	BY

WEST VIRGINIA DEPARTMENT OF TRANSPORTATION
DIVISION OF HIGHWAYS
ENGINEERING DIVISION

DESIGNED	DATE	CHECKED	DATE
DRAWN	DATE	REVIEWED	DATE

STANDARD BRIDGE PLANS
TYPICAL SECTION 4 BEAM SUPER RIGHT
SHEET NUMBER **1300TY2**

18-AUG-2016 15:07

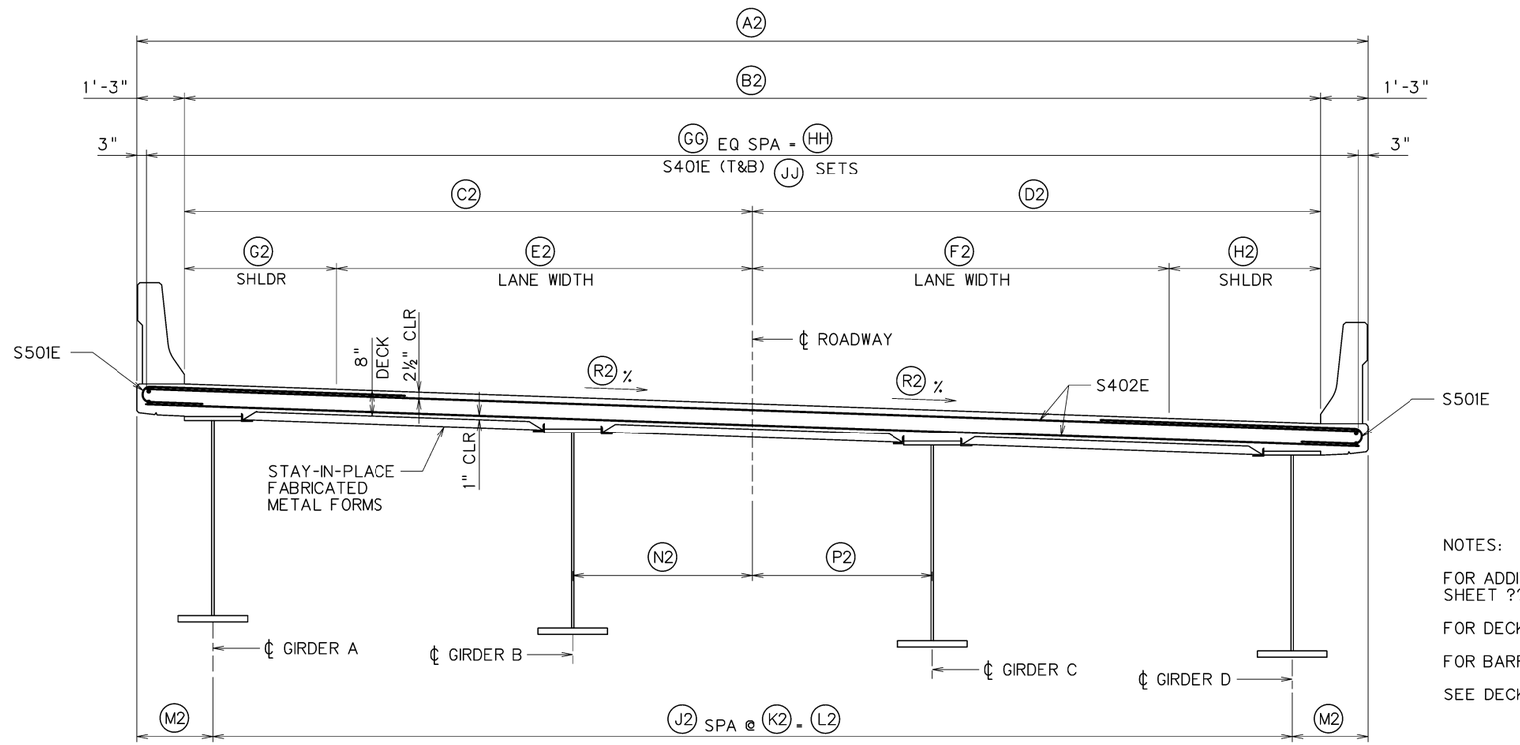

NOTES:

FOR ADDITIONAL REINFORCING, SEE "END ZONE LAYOUT", SHEET ?? OF ??.

FOR DECK NOTES, SEE SHEET ?? OF ??.

FOR BARRIER REINFORCING, SEE SHEET ?? OF ??.

SEE DECK LAYOUT FOR BILL OF REINFORCING SCHEDULE.

TYPICAL SECTION

LOOKING STATION AHEAD

TYPICAL SECTION CONTROL DIMENSIONS		
CODE	DESCRIPTION	DIMENSION
A2	OVERAL WIDTH	_____
B2	CLEAR WIDTH	_____
C2	℄ TO GUTTERLINE WIDTH (LEFT SIDE)	_____
D2	℄ TO GUTTERLINE WIDTH (RIGHT SIDE)	_____
E2	LEFT LANE WIDTH	_____
F2	RIGHT LANE WIDTH	_____
G2	LEFT SHOULDER WIDTH	_____
H2	RIGHT SHOULDER WIDTH	_____
J2	NUMBER OF SPACES	_____
K2	GIRDER SPACING	_____
L2	OVERALL WIDTH OF GIRDERS	_____
M2	OVERHANG	_____
N2	LEFT MOST INTERIOR GIRDER OFFSET FROM ℄	_____
P2	RIGHT MOST INTERIOR GIRDER OFFSET FROM ℄	_____
R2	CROSS SLOPE	_____

REBAR CONTROL DIMENSIONS		
CODE	DESCRIPTION	DIMENSION
GG	NUMBER OF EQUAL SPACES FOR TOP AND BOTTOM LONGITUDINAL REBAR	_____
HH	DISTANCE OF TOP AND BOTTOM LONGITUDINAL REBAR	_____
JJ	NUMBER OF REBAR SETS	_____

THIS SHEET TO BE USED WITH STANDARD DECK LAYOUT SHEET _____

NOT TO SCALE

NO.	REVISION	DATE	BY

WEST VIRGINIA DEPARTMENT OF TRANSPORTATION
DIVISION OF HIGHWAYS
ENGINEERING DIVISION

DESIGNED	DATE	CHECKED	DATE
_____	_____	_____	_____
DRAWN	DATE	REVIEWED	DATE
_____	_____	_____	_____

STANDARD BRIDGE PLANS
TYPICAL SECTION 4 BEAM SUPER LEFT
SHEET NUMBER 1300TY3

18-AUG-2016 15:07

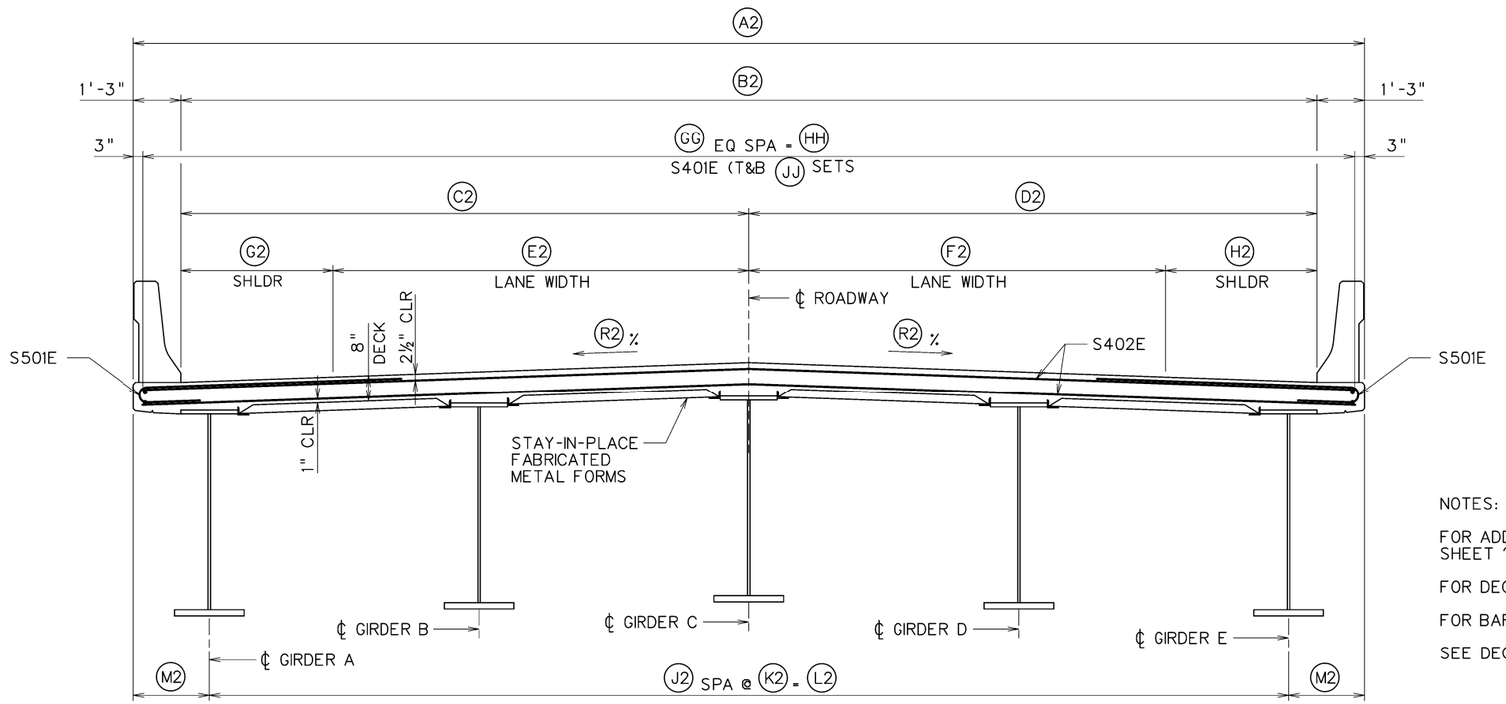

NOTES:

FOR ADDITIONAL REINFORCING, SEE "END ZONE LAYOUT", SHEET ?? OF ??.

FOR DECK NOTES, SEE SHEET ?? OF ??.

FOR BARRIER REINFORCING, SEE SHEET ?? OF ??.

SEE DECK LAYOUT FOR BILL OF REINFORCING SCHEDULE.

TYPICAL SECTION

LOOKING STATION AHEAD

TYPICAL SECTION CONTROL DIMENSIONS		
CODE	DESCRIPTION	DIMENSION
A2	OVERAL WIDTH	_____
B2	CLEAR WIDTH	_____
C2	℄ TO GUTTERLINE WIDTH (LEFT SIDE)	_____
D2	℄ TO GUTTERLINE WIDTH (RIGHT SIDE)	_____
E2	LEFT LANE WIDTH	_____
F2	RIGHT LANE WIDTH	_____
G2	LEFT SHOULDER WIDTH	_____
H2	RIGHT SHOULDER WIDTH	_____
J2	NUMBER OF SPACES	_____
K2	GIRDER SPACING	_____
L2	OVERALL WIDTH OF GIRDERS	_____
M2	OVERHANG	_____
R2	CROSS SLOPE	_____
		_____
		_____

REBAR CONTROL DIMENSIONS		
CODE	DESCRIPTION	DIMENSION
GG	NUMBER OF EQUAL SPACES FOR TOP AND BOTTOM LONGITUDINAL REBAR	_____
HH	DISTANCE OF TOP AND BOTTOM LONGITUDINAL REBAR	_____
JJ	NUMBER OF REBAR SETS	_____

THIS SHEET TO BE USED WITH STANDARD DECK LAYOUT SHEET _____ NOT TO SCALE

NO.	REVISION	DATE	BY

WEST VIRGINIA DEPARTMENT OF TRANSPORTATION
DIVISION OF HIGHWAYS
ENGINEERING DIVISION

DESIGNED	DATE	CHECKED	DATE
_____	_____	_____	_____
DRAWN	DATE	REVIEWED	DATE
_____	_____	_____	_____

STANDARD BRIDGE PLANS
TYPICAL SECTION 5 BEAM NORMAL CROWN
SHEET NUMBER 1300TY4

18-AUG-2016 15:07

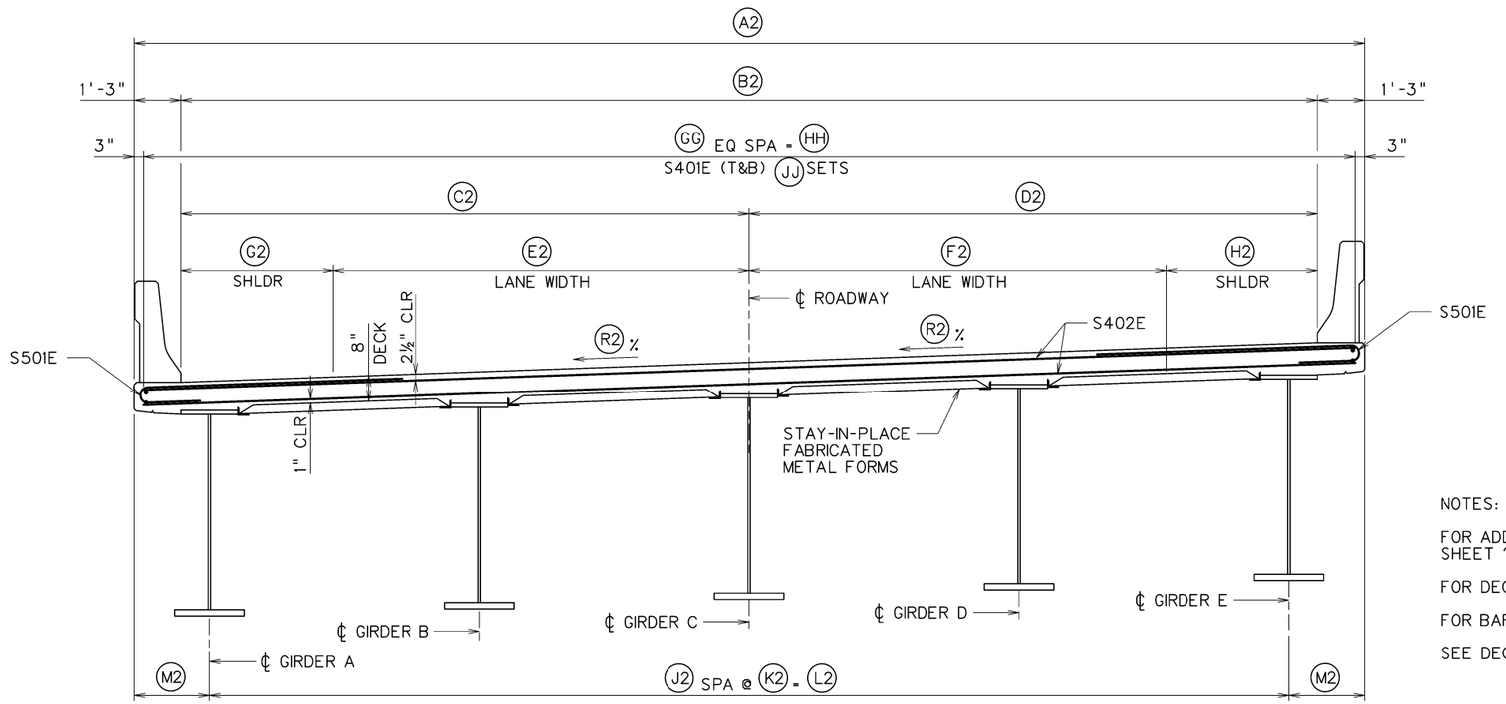

NOTES:

FOR ADDITIONAL REINFORCING, SEE "END ZONE LAYOUT", SHEET ?? OF ??.

FOR DECK NOTES, SEE SHEET ?? OF ??.

FOR BARRIER REINFORCING, SEE SHEET ?? OF ??.

SEE DECK LAYOUT FOR BILL OF REINFORCING SCHEDULE.

TYPICAL SECTION

LOOKING STATION AHEAD

TYPICAL SECTION CONTROL DIMENSIONS		
CODE	DESCRIPTION	DIMENSION
A2	OVERAL WIDTH	_____
B2	CLEAR WIDTH	_____
C2	℄ TO GUTTERLINE WIDTH (LEFT SIDE)	_____
D2	℄ TO GUTTERLINE WIDTH (RIGHT SIDE)	_____
E2	LEFT LANE WIDTH	_____
F2	RIGHT LANE WIDTH	_____
G2	LEFT SHOULDER WIDTH	_____
H2	RIGHT SHOULDER WIDTH	_____
J2	NUMBER OF SPACES	_____
K2	GIRDER SPACING	_____
L2	OVERALL WIDTH OF GIRDERS	_____
M2	OVERHANG	_____
R2	CROSS SLOPE	_____
		_____
		_____

REBAR CONTROL DIMENSIONS		
CODE	DESCRIPTION	DIMENSION
GG	NUMBER OF EQUAL SPACES FOR TOP AND BOTTOM LONGITUDINAL REBAR	_____
HH	DISTANCE OF TOP AND BOTTOM LONGITUDINAL REBAR	_____
JJ	NUMBER OF REBAR SETS	_____

THIS SHEET TO BE USED WITH STANDARD DECK LAYOUT SHEET _____ NOT TO SCALE

NO.	REVISION	DATE	BY

WEST VIRGINIA DEPARTMENT OF TRANSPORTATION
DIVISION OF HIGHWAYS
ENGINEERING DIVISION

DESIGNED	DATE	CHECKED	DATE
_____	_____	_____	_____
DRAWN	DATE	REVIEWED	DATE
_____	_____	_____	_____

STANDARD BRIDGE PLANS
TYPICAL SECTION 5 BEAM SUPER RIGHT
SHEET NUMBER 1300TY5

18-AUG-2016 15:07

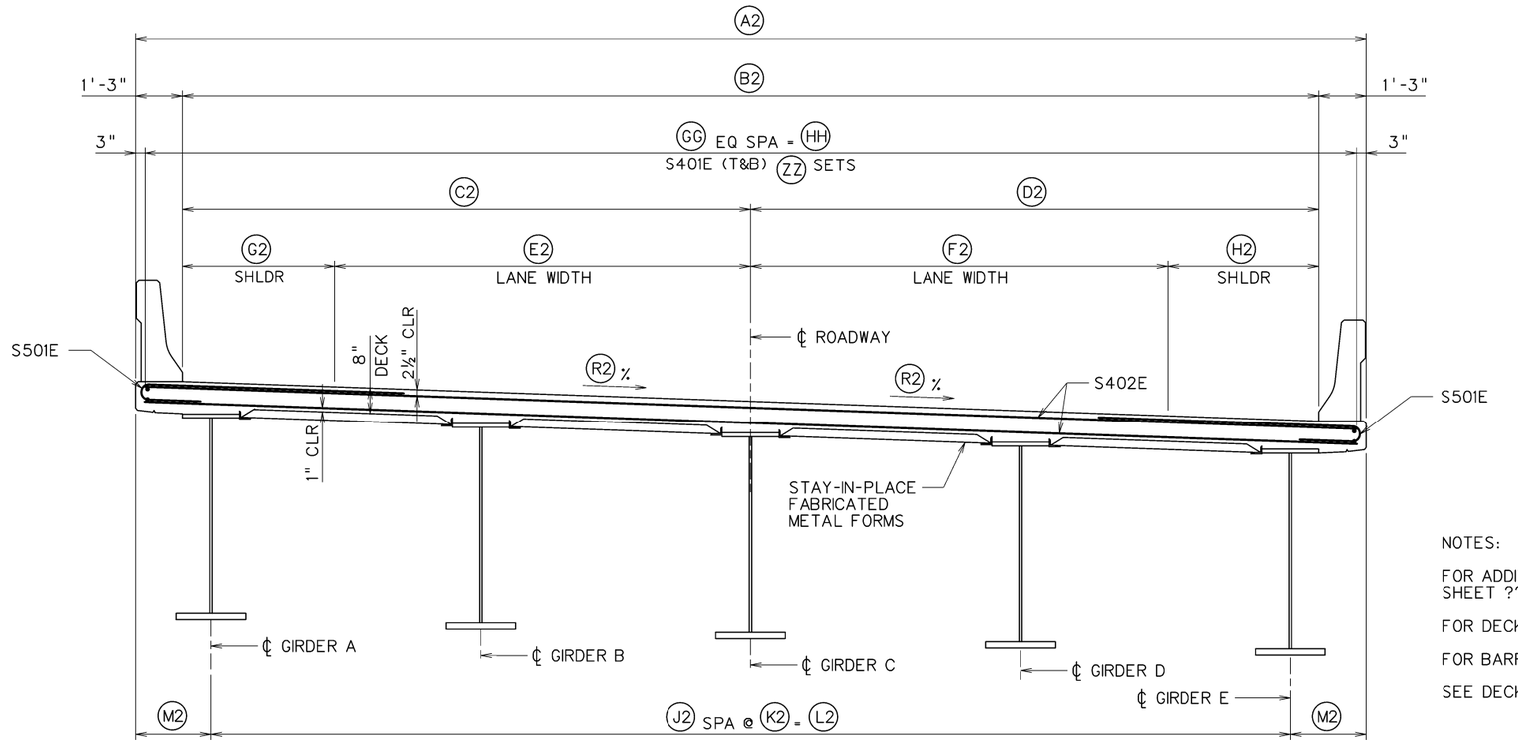

TYPICAL SECTION

LOOKING STATION AHEAD

NOTES:

FOR ADDITIONAL REINFORCING, SEE "END ZONE LAYOUT", SHEET ?? OF ??.

FOR DECK NOTES, SEE SHEET ?? OF ??.

FOR BARRIER REINFORCING, SEE SHEET ?? OF ??.

SEE DECK LAYOUT FOR BILL OF REINFORCING SCHEDULE.

TYPICAL SECTION CONTROL DIMENSIONS		
CODE	DESCRIPTION	DIMENSION
A2	OVERAL WIDTH	_____
B2	CLEAR WIDTH	_____
C2	℄ TO GUTTERLINE WIDTH (LEFT SIDE)	_____
D2	℄ TO GUTTERLINE WIDTH (RIGHT SIDE)	_____
E2	LEFT LANE WIDTH	_____
F2	RIGHT LANE WIDTH	_____
G2	LEFT SHOULDER WIDTH	_____
H2	RIGHT SHOULDER WIDTH	_____
J2	NUMBER OF SPACES	_____
K2	GIRDER SPACING	_____
L2	OVERALL WIDTH OF GIRDERS	_____
M2	OVERHANG	_____
R2	CROSS SLOPE	_____
		_____
		_____

REBAR CONTROL DIMENSIONS		
CODE	DESCRIPTION	DIMENSION
GG	NUMBER OF EQUAL SPACES FOR TOP AND BOTTOM LONGITUDINAL REBAR	_____
HH	DISTANCE OF TOP AND BOTTOM LONGITUDINAL REBAR	_____
JJ	NUMBER OF REBAR SETS	_____

THIS SHEET TO BE USED WITH STANDARD DECK LAYOUT SHEET _____ NOT TO SCALE

NO.	REVISION	DATE	BY

WEST VIRGINIA DEPARTMENT OF TRANSPORTATION
DIVISION OF HIGHWAYS
ENGINEERING DIVISION

DESIGNED	DATE	CHECKED	DATE
DRAWN	DATE	REVIEWED	DATE

STANDARD BRIDGE PLANS
TYPICAL SECTION 5 BEAM SUPER LEFT
SHEET NUMBER 1300TY6

18-AUG-2016 15:07