WEST VIRGINIA
DEPARTMENT OF TRANSPORTATION
DIVISION OF HIGHWAYS
PLANS FOR CONSTRUCTION
OF
STATE HIGHWAY

STATE PROJECT NO. X316-H-100.40 06
FEDERAL PROJECT NO. APD-0484(251)C
ROUTE NO. U.S. 48
MOOREFIELD DISTRICT
HARDY COUNTY

US 220 - FORT RUN

PROJECT	STATION TO STATION	LENGTH (FT.)	LENGTH (MI.)
ROADWAY	1701+00.00 TO 1707+47.50	647.50	0.123
BRIDGE	1707+47.50 TO 1708+98.50	NIC	NIC
ROADWAY	1708+98.50 TO 1724+68.50	1570.00	0.297
BRIDGE	1724+68.50 TO 1730+14.50	NIC	NIC
ROADWAY	1730+14.50 TO 1780+20.23	5005.73	0.948
BRIDGE #10444	1780+20.23 TO 1781+23.77	103.54	0.020
ROADWAY	1781+23.77 TO 1782+50.00	126.23	0.024
TOTAL		7453.00	1.412

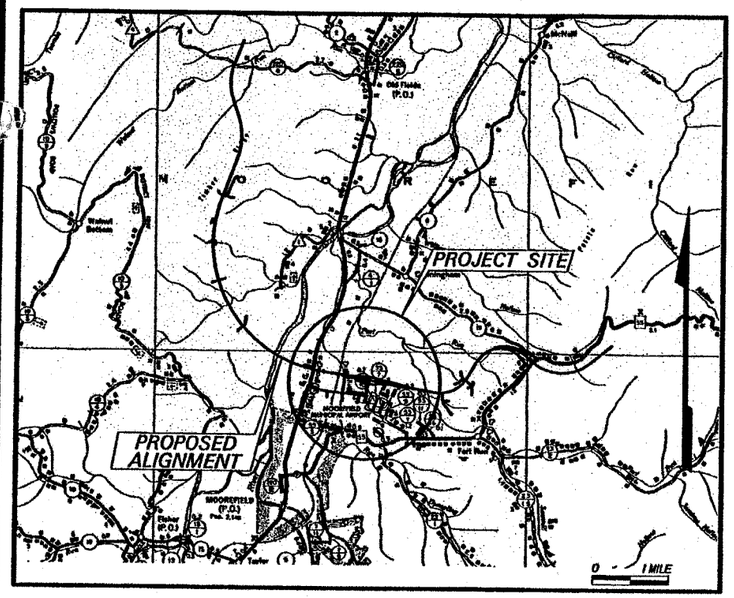

Public Roads Div.	State Stat. No.	State Project No.	Federal Project No.	Fiscal Year	County	Sheet No.	Total Sheets
W.V.	5	X316 -H- 100.40 06	APD 0484 (251)C	2003	HARDY	1	670

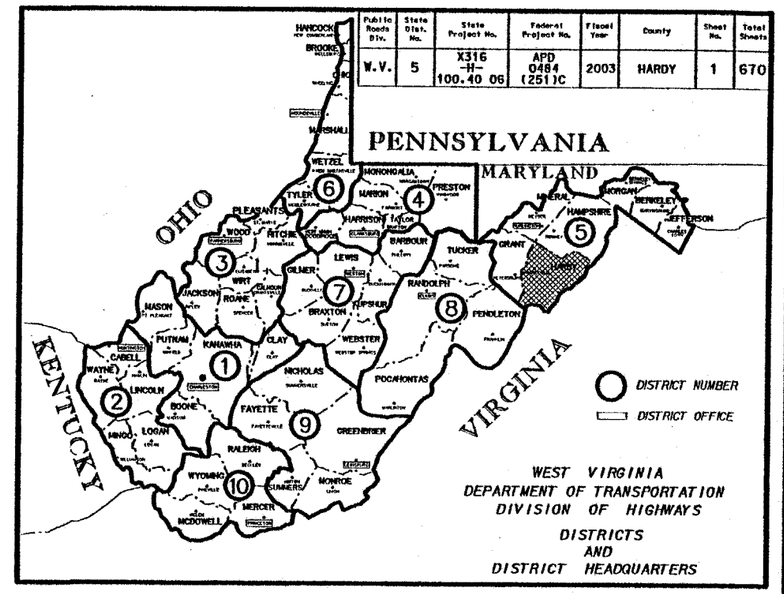

UTILITIES

ALLEGHENY POWER SYSTEMS (GAS)
ALLEGHENY POWER SYSTEMS (ELECTRIC)
FRONTIER COMMUNICATIONS OF WV
HARDY TELECOMMUNICATIONS INC.
WV STATE RAIL AUTHORITY
HARDY COUNTY PSD (WATER)
TOWN OF MOOREFIELD SEWER

TYPES OF CONSTRUCTION

GRADE, DRAIN, PAVE, WATERLINE RELOCATION
SANITARY SEWER RELOCATION (FORCE MAIN),
PRIVATE SANITARY SEWER RELOCATION (PARCEL 63)
PAVEMENT MARKING, SIGNING, LIGHTING, SIGNAL,
AND BRIDGE NO.'S 10443, 10444 & 10445

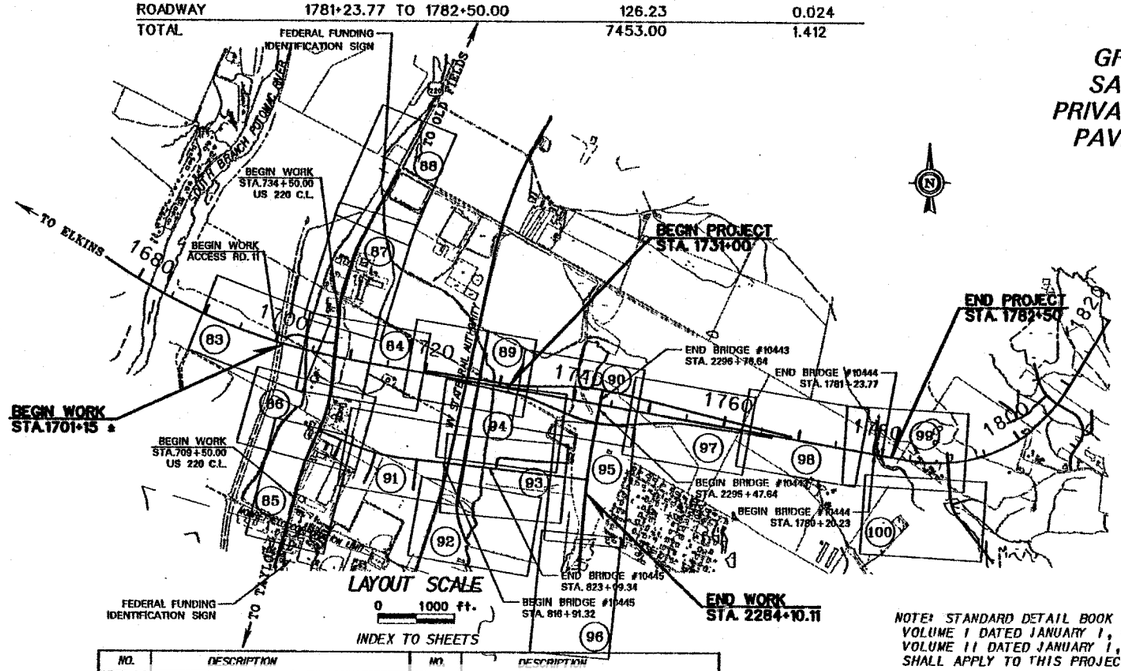

LEGEND

- HISTORIC AREA
- WETLANDS
- LANDFILL
- PUBLIC LAND CORPORATION

SCALES

PLAN HOR. 0 — 50 ft.
PROFILE VERT. 0 — 10 ft.
PROFILE HOR. 0 — 50 ft.

CONVENTIONAL SIGNS

- STATE LINE
- COUNTY LINE
- CORPORATION LINE
- PROPOSED R/W LINE
- PROPERTY LINE
- EXISTING FENCE
- PROPOSED FENCE
- EDGE OF STREAM
- PROPOSED GUARD RAIL
- EXISTING GUARD RAIL
- RAILROAD
- GAS LINE
- WATER LINE
- TELEPHONE LINE
- ELECTRIC LINE
- TELEPHONE POLE
- POWER POLE
- COMBINED POWER AND TELEPHONE POLE
- TREE
- SHRUB
- RIGHT OF WAY MARKER

DESIGN DESIGNATION	
A.D.T. (2003)	10,350
A.D.T. (2023)	18,600
D.H.V. 2023	1860
D	60/40
T (DHV)	10%
V	65MPH

NO.	DESCRIPTION	NO.	DESCRIPTION
1	TITLE SHEET	152-155	EROSION CONTROL PLAN SHEETS
2-10	[illegible]	[illegible]	[illegible] (AR.63)
11-13	SUMMARY OF QUANTITIES	162-165	FORCE MAIN RELOCATION (MOOREFIELD)
14-15	[illegible]	[illegible]	[illegible]
16-24	QUANTITY TABLES	176-194	SIGNING & PAVEMENT MARKING PLANS
25	SURVEY REFERENCE SHEETS	195-203	LIGHTING PLANS
27-33	[illegible] CUTS	204-209	WATERLINE RELOCATION
34-50	PAVEMENT INTERSECTION DETAILS	210-232	SOIL AND GEOLOGIC PLANS
51-52	TRAFFIC SKETCH MAP	232A-232B	ARCHITECTURAL PLANS
53-8[illegible]	SPECIAL DETAILS	233-277	BRIDGE #10443 PLANS
59	[illegible]	[illegible]	[illegible]
59-66	SUPERELEVATION TABLES & DIAGRAMS	318-380	BRIDGE #10445 PLANS
67-82	[illegible]	[illegible]	[illegible] 8'-1" PIPE ARCH CULVERT PLANS
83-100	PLAN SHEETS	372-381	OWNERSHIP INDEXES & PROPERTY MAPS
101-129	ROADWAY PROFILE SHEETS	382-393B	STREAM STABILIZATION
130-136	PIPE PROFILE SHEETS	394-407	LANDSCAPING PLANS
137-151	CONTOUR GRADING PLAN SHEETS	408-670	CROSS SECTIONS

The WVDOH approved order of sheets was defined after the submission of this project.

For the new order of sheets please refer to Design Directive DD-01

NOTE: STANDARD DETAIL BOOK VOLUME I DATED JANUARY 1, 2000 & VOLUME II DATED JANUARY 1, 1994, SHALL APPLY TO THIS PROJECT.

REVISION NUMBER	SHEET NUMBER	REVISIONS	DATE	BY

Sept. 19th 2003

I HEREBY CERTIFY THAT THIS IS A CORRECT COPY OF THE PLANS OF PROJECT X316-H-100.40 06, APD-0484(251)C

EXECUTIVE SECRETARY

GARY C. REED REGISTERED PROFESSIONAL ENGINEER
PLANS PREPARED BY MICHAEL BAKER JR., INC.
STATE OF WEST VIRGINIA
SIGNATURE Gary C. Reed
DATE September 16, 2003
PROJECT NO.

BRIDGE NO. 10443 PLANS PREPARED BY JOHN C. GIESE ENGINEERING INC.
REGISTERED PROFESSIONAL ENGINEER
SIGNATURE John C. Giese
No. 3065
DATE September 16, 2003
STATE OF WEST VIRGINIA

BRIDGE NO. 10445 PLANS PREPARED BY L.A. GATES COMPANY
REGISTERED PROFESSIONAL ENGINEER
SIGNATURE 13447
DATE September 16, 2003
STATE OF WEST VIRGINIA

RECOMMENDED DESIGNER

RECOMMENDED FOR APPROVAL STATE HIGHWAY ENGINEER for

APPROVED COMMISSIONER OF HIGHWAYS

PROJECT NO. X316-H-100.40 06, APD-0484(251)C

3/8/2004 PRINTED BY WVDOT OFFICE SERVICES DIVISION

Public Roads Div.	State Dist. No.	State Project No.	Federal Project No.	Fiscal Year	County	Sheet No.	Total Sheets
WV	5	X316 - H - 100.40 06	APD 0484 (251)C	2003	HARDY	4	670

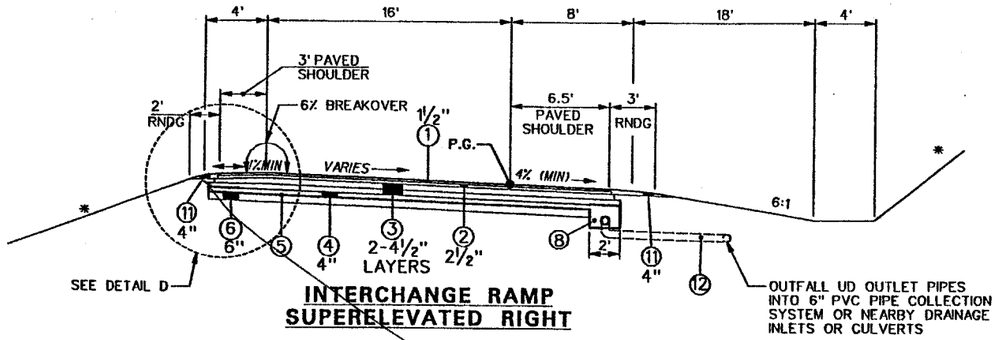

INTERCHANGE RAMP SUPERELEVATED RIGHT

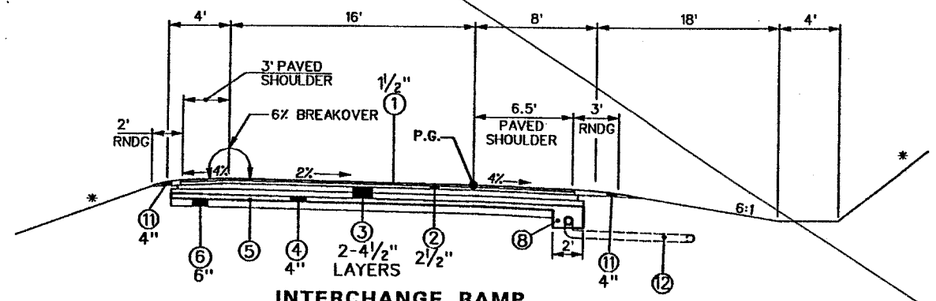

INTERCHANGE RAMP NORMAL SECTION

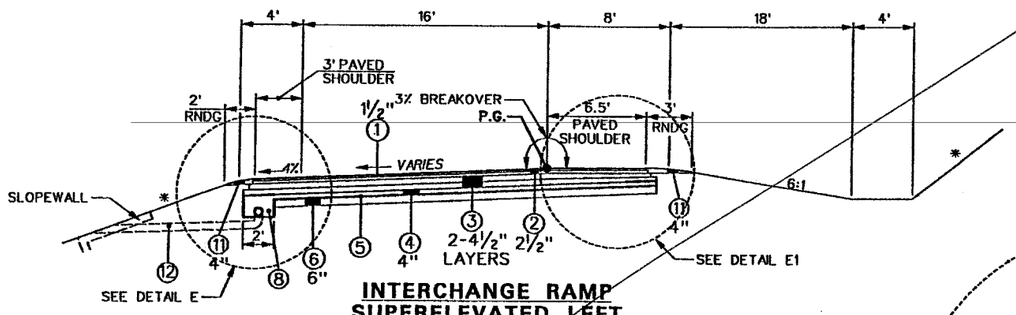

INTERCHANGE RAMP SUPERELEVATED LEFT

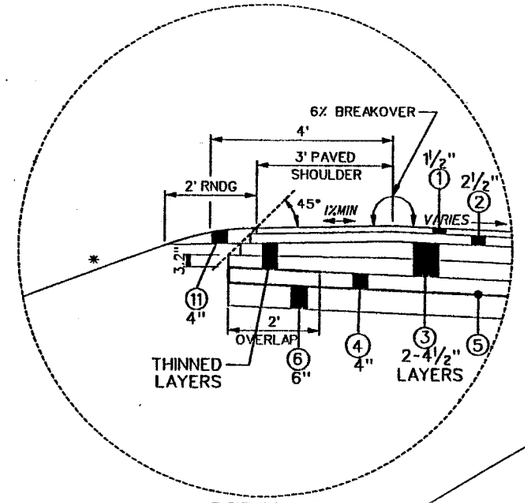

DETAIL D

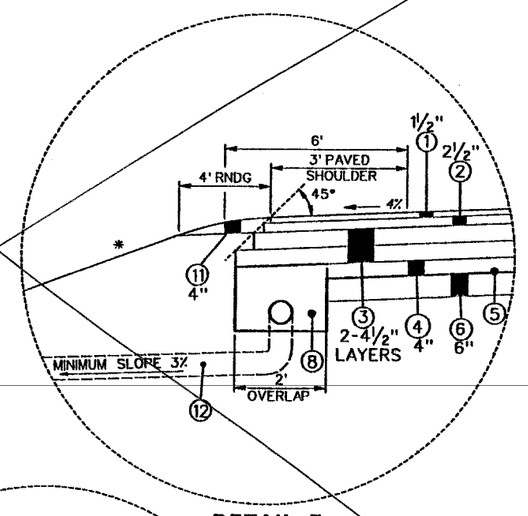

DETAIL E

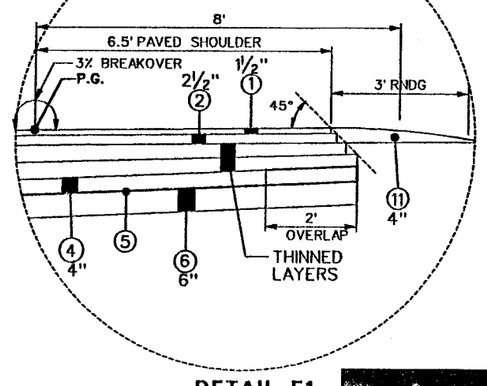

DETAIL E1

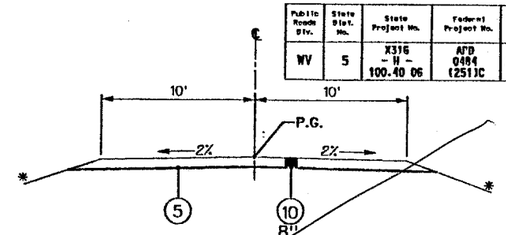

CONTRACTORS ACCESS ROAD

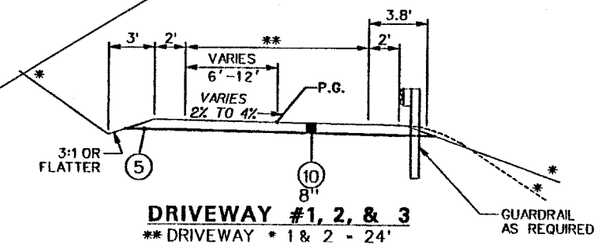

DRIVEWAY #1, 2, & 3

** DRIVEWAY * 1 & 2 - 24'
DRIVEWAY * 3 - 12'

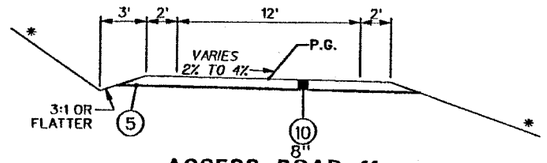

ACCESS ROAD 11

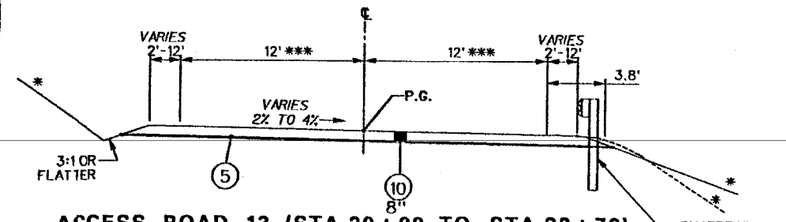

ACCESS ROAD 13 (STA.30+00 TO STA.32+72)

***** ACCESS ROAD 14**
(STA.40+68.00 TO STA.41+82.31) 12 FEET
(STA.41+82.31 TO STA.43+62.31) VARIES FROM 12 TO 6 FT
(STA.43+62.31 TO STA.51+51.93) 6 FEET

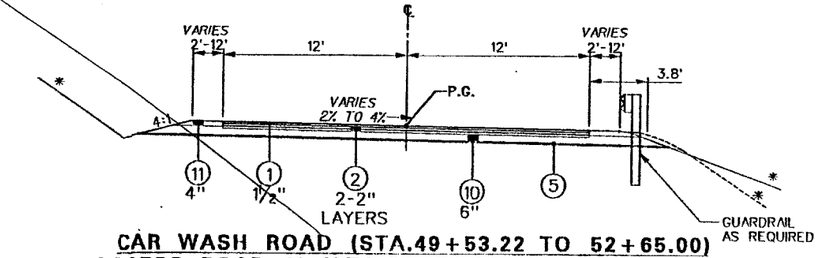

CAR WASH ROAD (STA.49+53.22 TO 52+65.00)
ACCESS ROAD 12 (STA.20+00.00 TO STA.23+21.39)
ACCESS ROAD 13 (STA.32+72.00 TO STA.32+92.00)
NORTH AND SOUTH ENTRANCE TO THE DEALERSHIP

LEGEND:

1. ITEM 402001-011 SUPERPAVE HOT MIX ASPHALT SKID RESISTANT PAVEMENT, TYPE 9.5, PER TON
2. ITEM 401001-011 SUPERPAVE HOT-MIX ASPHALT BASE COURSE, STONE OR GRAVEL, TYPE 19, PER TN
3. ITEM 401001-011 SUPERPAVE HOT MIX ASPHALT BASE COURSE, BASE 1, TYPE 37.5, PER TON
4. ITEM 311006-001 OPEN GRADED FREE DRAINING BASE COURSE, PER CY
5. ITEM 207034-000 FABRIC FOR SEPARATION, PER SY
6. ITEM 207002-000 SUBGRADE , PER CY
8. ITEM 606029-001 FREE DRAINING BASE TRENCH, PER LF
9. ITEM 610006-005 MEDIAN, TYPE F, PER LF
10. ITEM 307001-001 AGGREGATE BASE COURSE STONE OR GRAVEL, CLASS 1, PER CY
11. ITEM 307001-001 AGGREGATE BASE COURSE STONE OR GRAVEL, CLASS 10, PER CY
12. ITEM 606030-001 OUTLET PIPE, PER LF

NOTE:
* - SLOPE VARIES, SEE CROSS SECTIONS

Baker
Michael Baker Jr., Inc.

REVISION NUMBER	SHEET NUMBER	REVISION	DATE	BY
		Sheet Deleted		

THE WEST VIRGINIA DEPARTMENT OF TRANSPORTATION
DIVISION OF HIGHWAYS

TYPICAL SECTIONS

L:\proj\Corridor\H\Sect5\Contract 06\FinalDes\Const06\dr\typ03c.typ
04:24:35 PM
03/01/2004

Public Roads Div.	State Dist. No.	State Project No.	Federal Project No.	Fiscal Year	County	Sheet No.	Total Sheets
WV	5	X316 - H - 100.40 06	APD 0484 (251)C	2003	HARDY	3	670

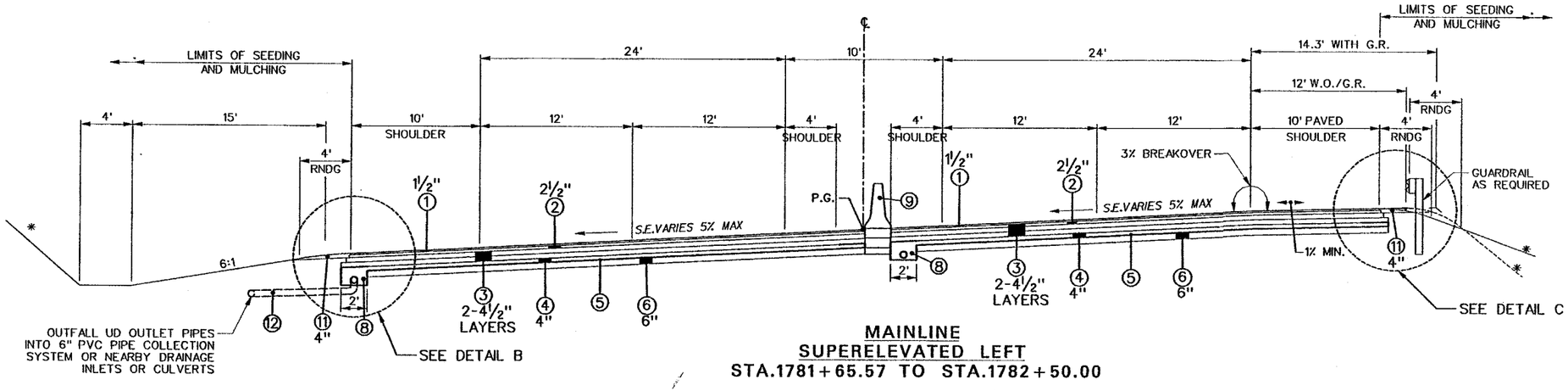

MAINLINE
SUPERELEVATED LEFT
STA.1781+65.57 TO STA.1782+50.00

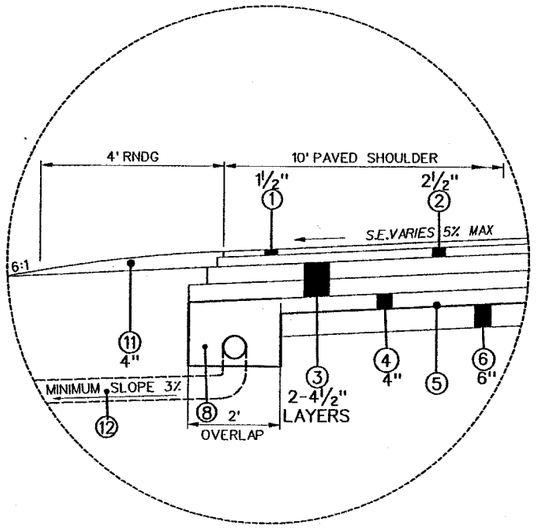

DETAIL B

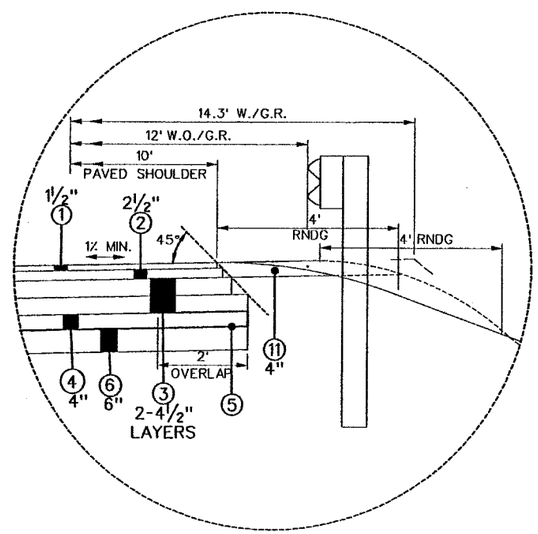

DETAIL C

NOTE:

* - SLOPE VARIES, SEE CROSS SECTIONS

LEGEND:

1. ITEM 402001-011 SUPERPAVE HOT MIX ASPHALT SKID RESISTANT PAVEMENT, TYPE 9.5, PER TON
2. ITEM 401001-011 SUPERPAVE HOT-MIX ASPHALT BASE COURSE, STONE OR GRAVEL, TYPE 19, PER TN
3. ITEM 401001-011 SUPERPAVE HOT MIX ASPHALT BASE COURSE, BASE 1, TYPE 37.5, PER TON
4. ITEM 311006-001 OPEN GRADED FREE DRAINING BASE COURSE, PER CY
5. ITEM 207034-000 FABRIC FOR SEPARATION, PER SY
6. ITEM 207002-000 SUBGRADE , PER CY
8. ITEM 606029-001 FREE DRAINING BASE TRENCH, PER LF
9. ITEM 610006-005 MEDIAN, TYPE F, PER LF
10. ITEM 307001-001 AGGREGATE BASE COURSE STONE OR GRAVEL, CLASS 1, PER CY
11. ITEM 307001-001 AGGREGATE BASE COURSE STONE OR GRAVEL, CLASS 10, PER CY
12. ITEM 606030-001 OUTLET PIPE, PER LF

Baker
Michael Baker Jr., Inc.

REVISION NUMBER	SHEET NUMBER	REVISION	DATE	BY

THE WEST VIRGINIA DEPARTMENT OF TRANSPORTATION
DIVISION OF HIGHWAYS

TYPICAL SECTIONS

I:\proj\corridorh\sect8\contract 08\finaldes\const08\avtyp02c.typ
11:32:27 AM
08/21/2003

Public Roads Div.	State Dist. No.	State Project No.	Federal Project No.	Fiscal Year	County	Sheet No.	Total Sheets
WV	5	X316 - H - 100.40 06	APD 0484 (251)C	2003	HARDY	4	670

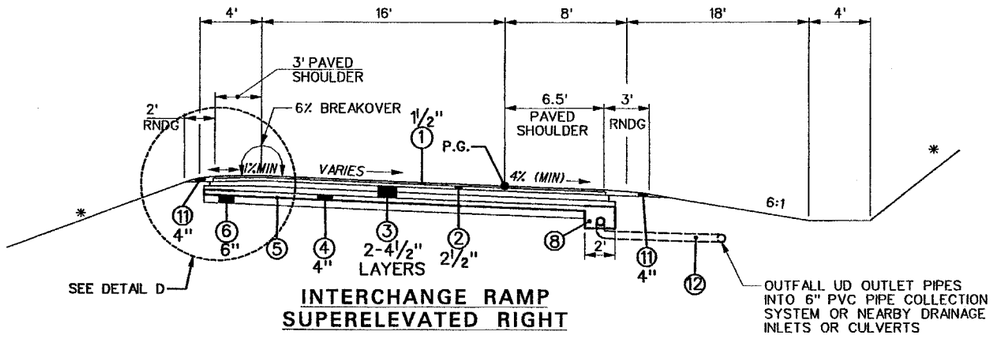

INTERCHANGE RAMP SUPERELEVATED RIGHT

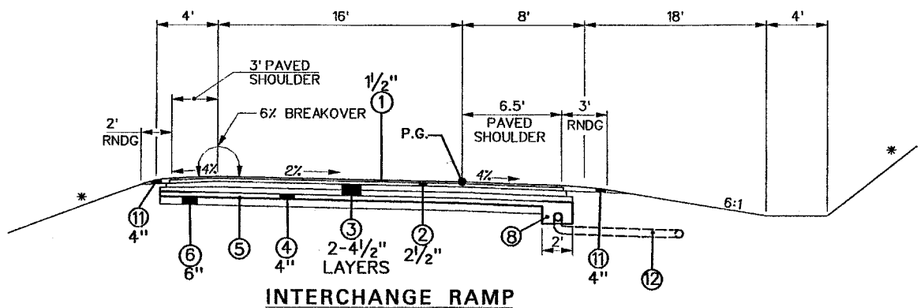

INTERCHANGE RAMP NORMAL SECTION

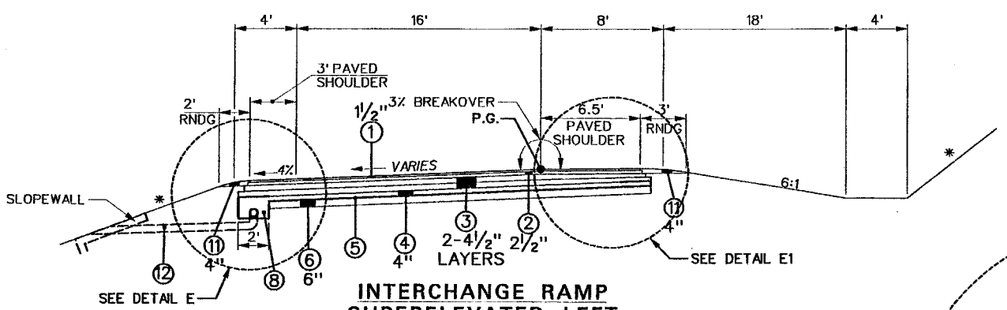

INTERCHANGE RAMP SUPERELEVATED LEFT

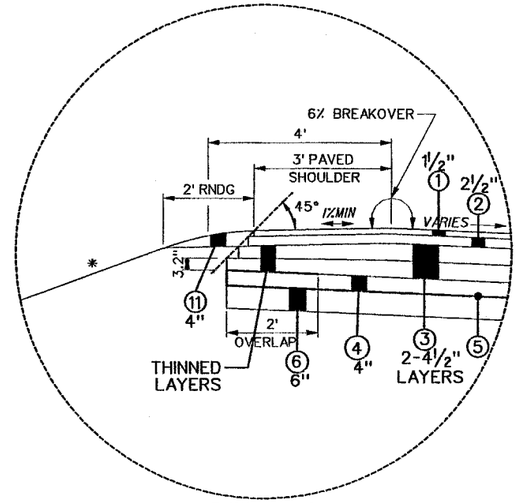

DETAIL D

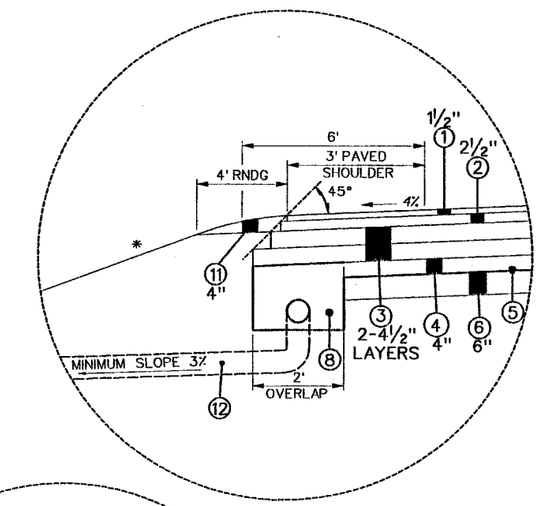

DETAIL E

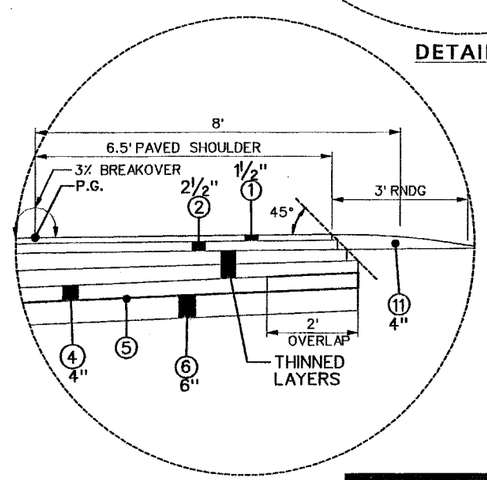

DETAIL E1

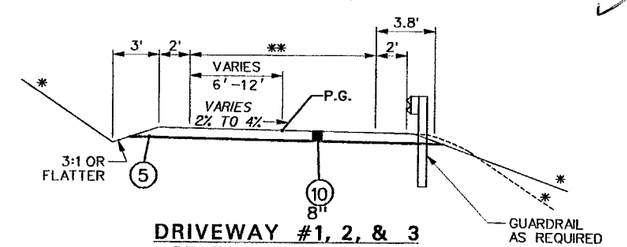

DRIVEWAY #1, 2, & 3

** DRIVEWAY * 1 & 2 = 24'
DRIVEWAY * 3 = 12'

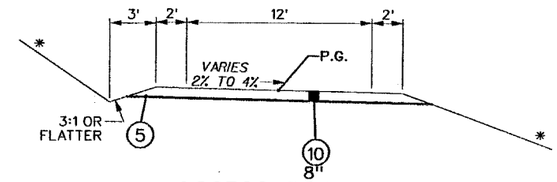

ACCESS ROAD 11

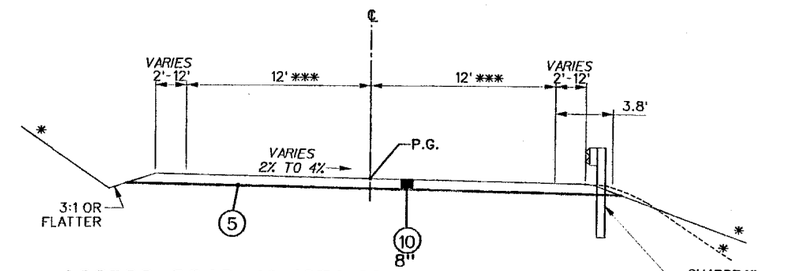

ACCESS ROAD 13 (STA.30+00 TO STA.32+72)

*** ACCESS ROAD 14
(STA.40+68.00 TO STA.41+82.31) 12 FEET
(STA.41+82.31 TO STA.43+62.31) VARIES FROM 12 TO 6 FT
(STA.43+62.31 TO STA.51+51.93) 6 FEET

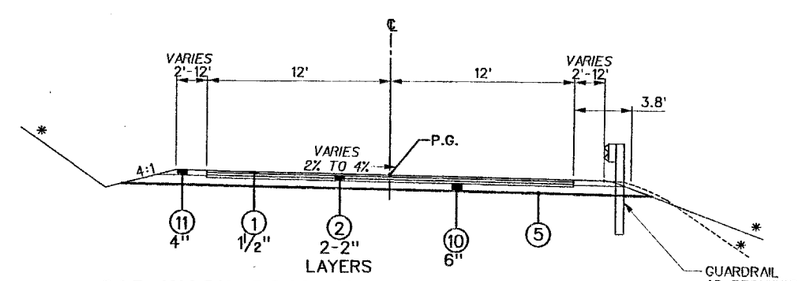

CAR WASH ROAD (STA.49+53.22 TO 52+65.00)
ACCESS ROAD 12 (STA.20+00.00 TO STA.23+21.39)
ACCESS ROAD 13 (STA.32+72.00 TO STA.32+92.00)
NORTH AND SOUTH ENTRANCE TO THE DEALERSHIP

LEGEND:

1. ITEM 402001-011 SUPERPAVE HOT MIX ASPHALT SKID RESISTANT PAVEMENT, TYPE 9.5, PER TON
2. ITEM 401001-011 SUPERPAVE HOT-MIX ASPHALT BASE COURSE, STONE OR GRAVEL, TYPE 19, PER TN
3. ITEM 401001-011 SUPERPAVE HOT MIX ASPHALT BASE COURSE, BASE I, TYPE 37.5, PER TON
4. ITEM 311006-001 OPEN GRADED FREE DRAINING BASE COURSE, PER CY
5. ITEM 207034-000 FABRIC FOR SEPARATION, PER SY
6. ITEM 207002-000 SUBGRADE , PER CY
8. ITEM 606029-001 FREE DRAINING BASE TRENCH, PER LF
9. ITEM 610006-005 MEDIAN, TYPE F, PER LF
10. ITEM 307001-001 AGGREGATE BASE COURSE STONE OR GRAVEL, CLASS 1, PER CY
11. ITEM 307001-001 AGGREGATE BASE COURSE STONE OR GRAVEL, CLASS 10, PER CY
12. ITEM 606030-001 OUTLET PIPE, PER LF

NOTE:
* - SLOPE VARIES, SEE CROSS SECTIONS

Baker
Michael Baker Jr., Inc.

REVISION NUMBER	SHEET NUMBER	REVISION	DATE	BY

THE WEST VIRGINIA DEPARTMENT OF TRANSPORTATION
DIVISION OF HIGHWAYS

TYPICAL SECTIONS

L:\proj\CorridorH\Sect6\Contract 06\FinalDes\Const06\dvtyp03c.typ
09:12:28 AM
01/14/2004

Public Roads Div.	State Dist. No.	State Project No.	Federal Project No.	Fiscal Year	County	Sheet No.	Total Sheets
WV	5	X316 - H - 100.40 06	APD 0484 (251)C	2003	HARDY	5	670

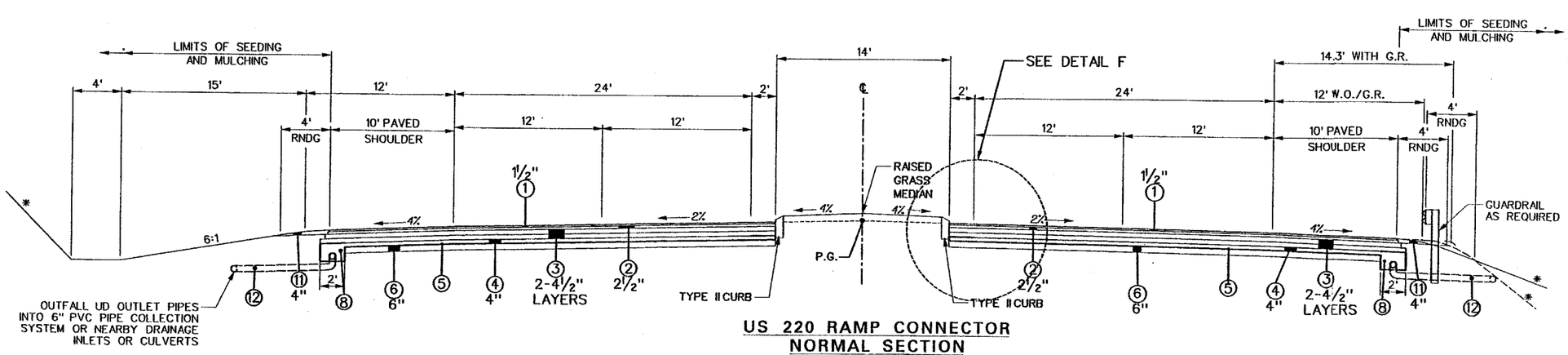

US 220 RAMP CONNECTOR
NORMAL SECTION
STA. 800+57.98 TO 801+85.68
STA. 823+53.00 TO 828+65.48

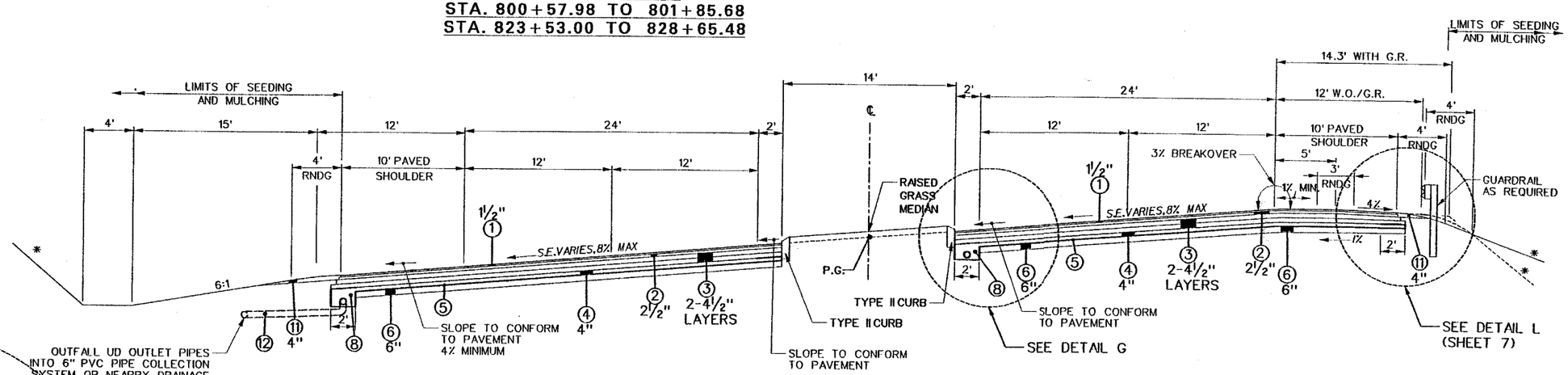

US 220 RAMP CONNECTOR
SUPERELEVATED LEFT
STA. 801+85.68 TO 803+98.00
STA. 807+42.75 TO 808+77.05
STA. 812+93.06 TO 814+25.00

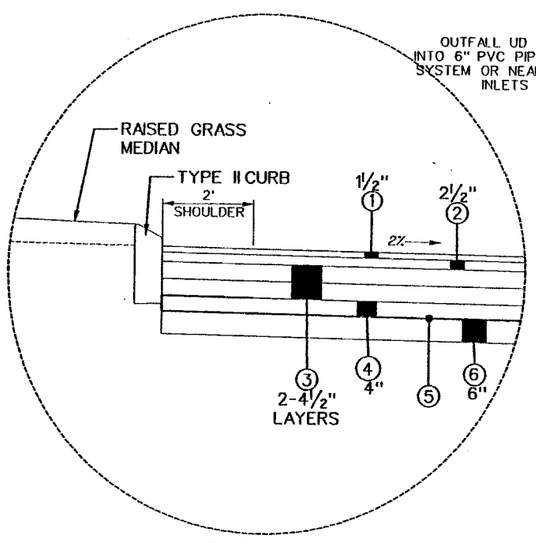

DETAIL F

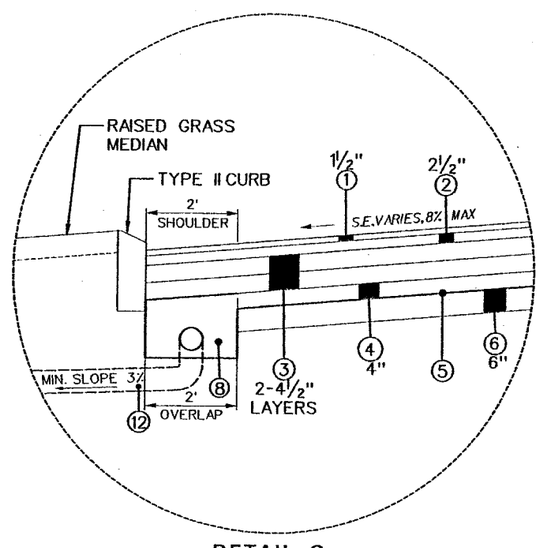

DETAIL G

NOTE:

* - SLOPE VARIES, SEE CROSS SECTIONS

LEGEND:

1. ITEM 402001-011 SUPERPAVE HOT MIX ASPHALT SKID RESISTANT PAVEMENT, TYPE 9.5, PER TON
2. ITEM 401001-011 SUPERPAVE HOT-MIX ASPHALT BASE COURSE, STONE OR GRAVEL, TYPE 19, PER TN
3. ITEM 401001-011 SUPERPAVE HOT MIX ASPHALT BASE COURSE, BASE I, TYPE 37.5, PER TON
4. ITEM 311006-001 OPEN GRADED FREE DRAINING BASE COURSE, PER CY
5. ITEM 207034-000 FABRIC FOR SEPARATION, PER SY
6. ITEM 207002-000 SUBGRADE , PER CY
8. ITEM 606029-001 FREE DRAINING BASE TRENCH, PER LF
9. ITEM 613006-005 MEDIAN, TYPE F, PER LF
10. ITEM 307001-001 AGGREGATE BASE COURSE STONE OR GRAVEL, CLASS 1, PER CY
11. ITEM 307001-001 AGGREGATE BASE COURSE STONE OR GRAVEL, CLASS 10, PER CY
12. ITEM 606030-001 OUTLET PIPE, PER LF

Baker
Michael Baker Jr., Inc.

REVISION NUMBER	SHEET NUMBER	REVISION	DATE	BY

THE WEST VIRGINIA DEPARTMENT OF TRANSPORTATION
DIVISION OF HIGHWAYS

TYPICAL SECTIONS

I:\proj\corridorh\sect5\contract 06\finaldes\conat06\dvtyp04c.typ
11:32:32 AM
08/21/2003

Public Roads Div.	State Dist. No.	State Project No.	Federal Project No.	Fiscal Year	County	Sheet No.	Total Sheets
WV	5	X316 - H - 100.40 06	APD 0484 (251)C	2003	HARDY	6	670

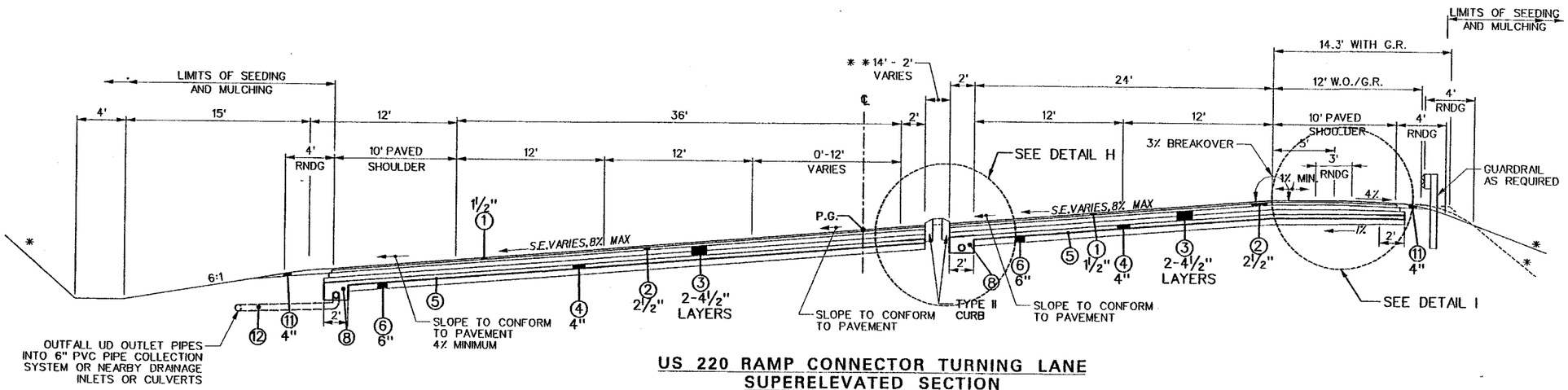

US 220 RAMP CONNECTOR TURNING LANE
SUPERELEVATED SECTION
STA. 803+98.00 TO 807+42.75
STA. 808+77.05 TO 812+93.06
STA. 814+25.00 TO 814+57.51

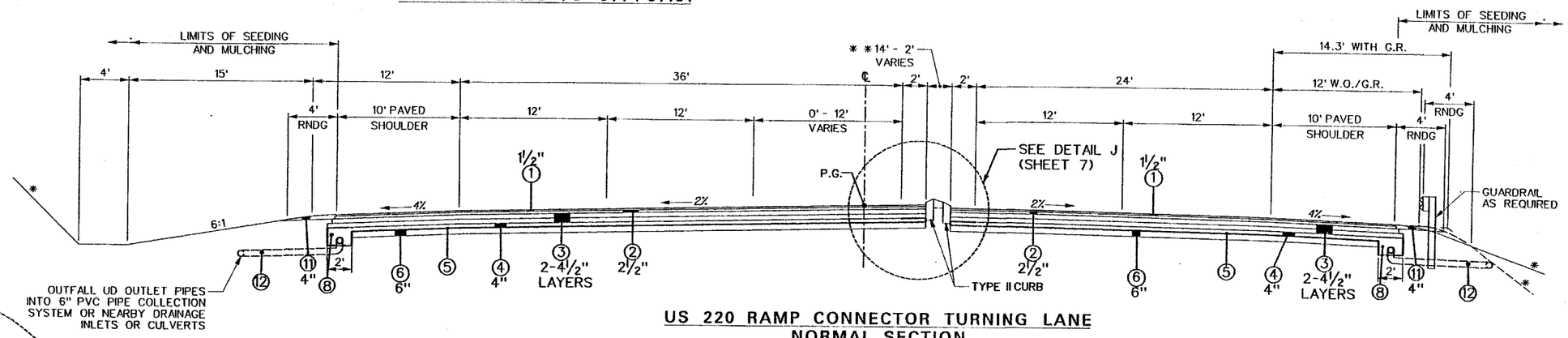

US 220 RAMP CONNECTOR TURNING LANE
NORMAL SECTION
STA. 814+57.51 TO 816+71.32

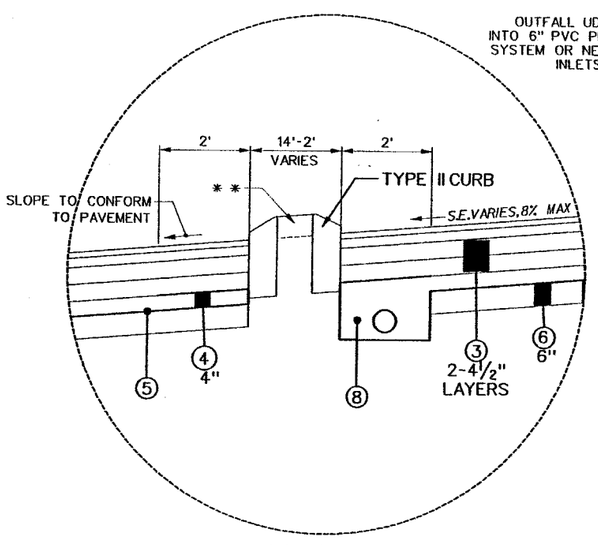

DETAIL H

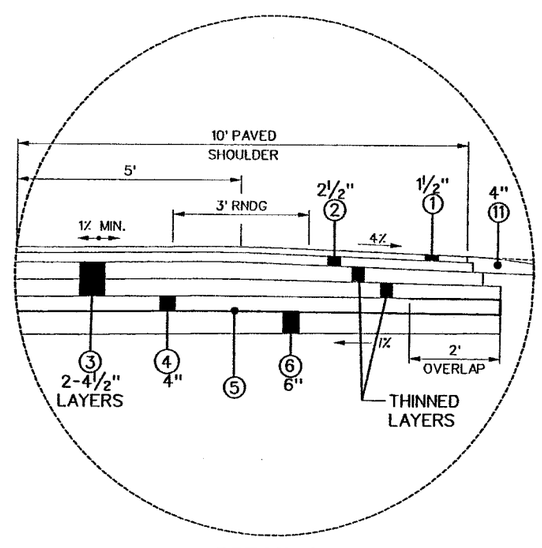

DETAIL I

NOTE:

* - SLOPE VARIES, SEE CROSS SECTIONS

** - WIDTH < 8 FT: CONCRETE SIDEWALK
WIDTH > 8 FT: RAISED GRASS MEDIAN

LEGEND:

① ITEM 402001-011 SUPERPAVE HOT MIX ASPHALT SKID RESISTANT PAVEMENT, TYPE 9.5, PER TON

② ITEM 401001-011 SUPERPAVE HOT-MIX ASPHALT BASE COURSE, STONE OR GRAVEL, TYPE 19, PER TN

③ ITEM 401001-011 SUPERPAVE HOT MIX ASPHALT BASE COURSE, BASE I, TYPE 37.5, PER TON

④ ITEM 311006-001 OPEN GRADED FREE DRAINING BASE COURSE, PER CY

⑤ ITEM 207034-000 FABRIC FOR SEPARATION, PER SY

⑥ ITEM 207002-000 SUBGRADE , PER CY

⑧ ITEM 606029-001 FREE DRAINING BASE TRENCH, PER LF

⑨ ITEM 610006-005 MEDIAN, TYPE F, PER LF

⑩ ITEM 307001-001 AGGREGATE BASE COURSE STONE OR GRAVEL, CLASS 1, PER CY

⑪ ITEM 307001-001 AGGREGATE BASE COURSE STONE OR GRAVEL, CLASS 10, PER CY

⑫ ITEM 606030-001 OUTLET PIPE, PER LF

Baker
Michael Baker Jr., Inc.

REVISION NUMBER	SHEET NUMBER	REVISION	DATE	BY

THE WEST VIRGINIA DEPARTMENT OF TRANSPORTATION
DIVISION OF HIGHWAYS

TYPICAL SECTIONS

I:\proj\corridorh\sect6\contract 06\finaldes\const06\dvtyp05c.typ
11:32:35 AM
08/21/2003

Public Roads Div.	State Dist. No.	State Project No.	Federal Project No.	Fiscal Year	County	Sheet No.	Total Sheets
WV	5	X316 - H - 100.40 06	APD 0484 (251)C	2003	HARDY	7	670

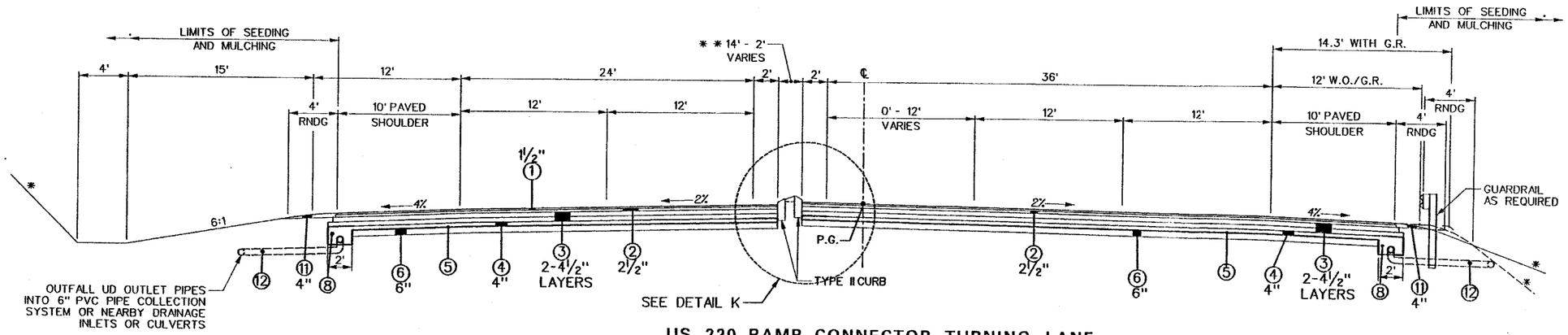

US 220 RAMP CONNECTOR TURNING LANE
NORMAL SECTION
STA. 823+29.34 TO 823+53.00
STA. 828+65.48 TO 835+07.86

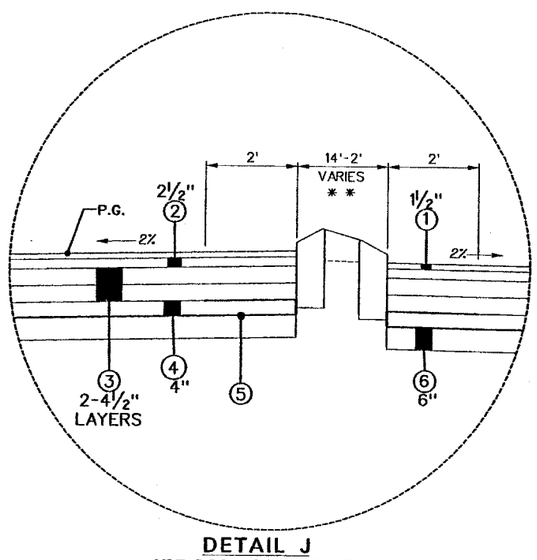

DETAIL J
(FROM SHEET 6)

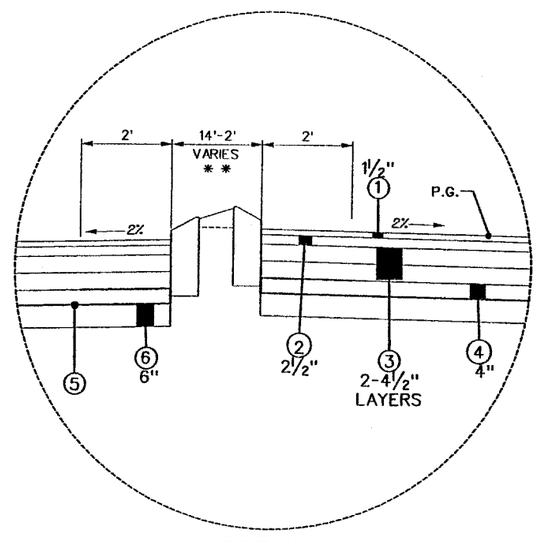

DETAIL K

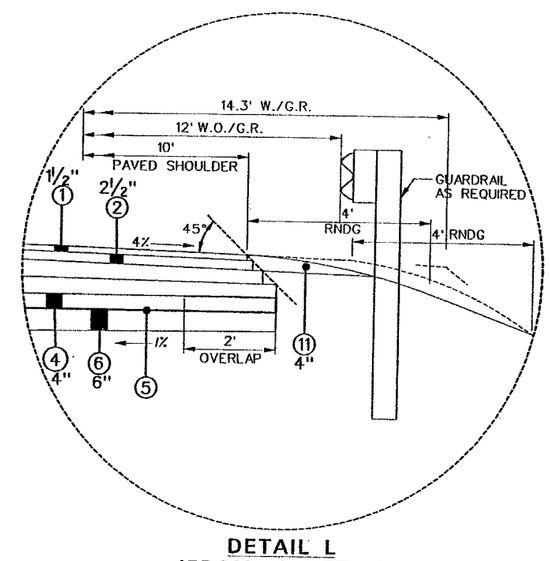

DETAIL L
(FROM SHEET 5)

LEGEND:

1. ITEM 402001-011 SUPERPAVE HOT MIX ASPHALT SKID RESISTANT PAVEMENT, TYPE 9.5, PER TON
2. ITEM 401001-011 SUPERPAVE HOT-MIX ASPHALT BASE COURSE, STONE OR GRAVEL, TYPE 19, PER TN
3. ITEM 401001-011 SUPERPAVE HOT MIX ASPHALT BASE COURSE, BASE I, TYPE 37.5, PER TON
4. ITEM 311006-001 OPEN GRADED FREE DRAINING BASE COURSE, PER CY
5. ITEM 207034-000 FABRIC FOR SEPARATION, PER SY
6. ITEM 207002-000 SUBGRADE , PER CY
8. ITEM 606029-001 FREE DRAINING BASE TRENCH, PER LF
9. ITEM 610006-005 MEDIAN, TYPE F, PER LF
10. ITEM 307001-001 AGGREGATE BASE COURSE STONE OR GRAVEL, CLASS 1, PER CY
11. ITEM 307001-001 AGGREGATE BASE COURSE STONE OR GRAVEL, CLASS 10, PER CY
12. ITEM 606030-001 OUTLET PIPE, PER LF

NOTE:

* - SLOPE VARIES, SEE CROSS SECTIONS

** - WIDTH < 8 FT: CONCRETE SIDEWALK
WIDTH > 8 FT: RAISED GRASS MEDIAN

Baker
Michael Baker Jr., Inc.

REVISION NUMBER	SHEET NUMBER	REVISION	DATE	BY

THE WEST VIRGINIA DEPARTMENT OF TRANSPORTATION
DIVISION OF HIGHWAYS

TYPICAL SECTIONS

I:\proj\corridorh\sect6\contract 06\finides\const06\dvtyp06c.typ
11:32:38 AM
08/21/2003

Public Roads Div.	State Dist. No.	State Project No.	Federal Project No.	Fiscal Year	County	Sheet No.	Total Sheets
WV	5	X316 - H - 100.40 06	APD 0484 (251)C	2003	HARDY	8	670

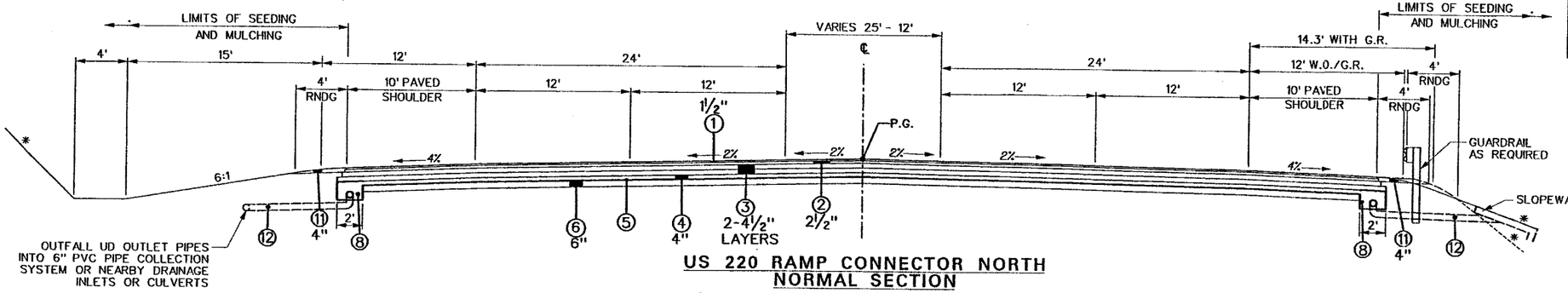

US 220 RAMP CONNECTOR NORTH
NORMAL SECTION

STA. 2284+91.25 TO 2286+52.85
STA. 2289+67.46 TO 2293+55.64
STA. 2295+27.64 TO 2296+96.64
STA. 2297+28.89 TO 2298+12.14

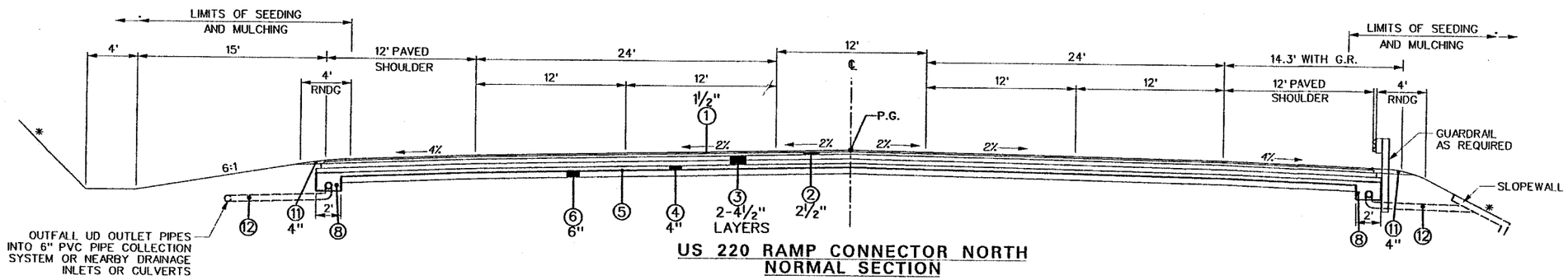

US 220 RAMP CONNECTOR NORTH
NORMAL SECTION

STA. 2293+55.64 TO 2295+27.64
STA. 2296+96.64 TO 2297+28.89

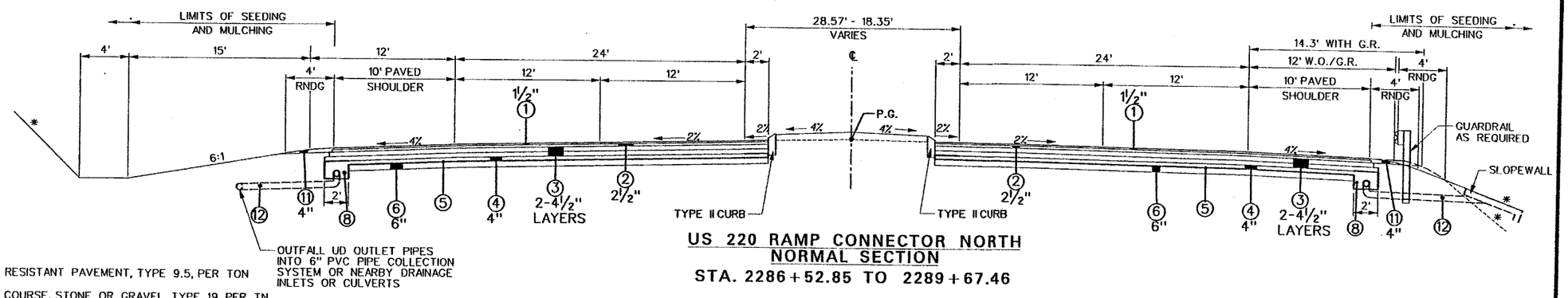

US 220 RAMP CONNECTOR NORTH
NORMAL SECTION

STA. 2286+52.85 TO 2289+67.46

LEGEND:

① ITEM 402001-011 SUPERPAVE HOT MIX ASPHALT SKID RESISTANT PAVEMENT, TYPE 9.5, PER TON
② ITEM 401001-011 SUPERPAVE HOT-MIX ASPHALT BASE COURSE, STONE OR GRAVEL, TYPE 19, PER TN
③ ITEM 401001-011 SUPERPAVE HOT MIX ASPHALT BASE COURSE, BASE I, TYPE 37.5, PER TON
④ ITEM 311006-001 OPEN GRADED FREE DRAINING BASE COURSE, PER CY
⑤ ITEM 207034-000 FABRIC FOR SEPARATION, PER SY
⑥ ITEM 207002-000 SUBGRADE , PER CY
⑧ ITEM 606029-001 FREE DRAINING BASE TRENCH, PER LF
⑨ ITEM 610006-005 MEDIAN, TYPE F, PER LF
⑩ ITEM 307001-001 AGGREGATE BASE COURSE STONE OR GRAVEL, CLASS 1, PER CY
⑪ ITEM 307001-001 AGGREGATE BASE COURSE STONE OR GRAVEL, CLASS 10, PER CY
⑫ ITEM 606030-001 OUTLET PIPE, PER LF

NOTE:

* - SLOPE VARIES, SEE CROSS SECTIONS

Baker
Michael Baker Jr., Inc.

REVISION NUMBER	SHEET NUMBER	REVISION	DATE	BY

THE WEST VIRGINIA DEPARTMENT OF TRANSPORTATION
DIVISION OF HIGHWAYS

TYPICAL SECTIONS

L:\proj\Corridor H\Sect8\Contract 06\FinalDes\Const06\dvtyp07c.typ

02:29:31 PM

09/03/2003

Public Roads Div.	State Dist. No.	State Project No.	Federal Project No.	Fiscal Year	County	Sheet No.	Total Sheets
WV	5	X316 - H - 100.40 06	APD 0484 (251)C	2003	HARDY	9	670

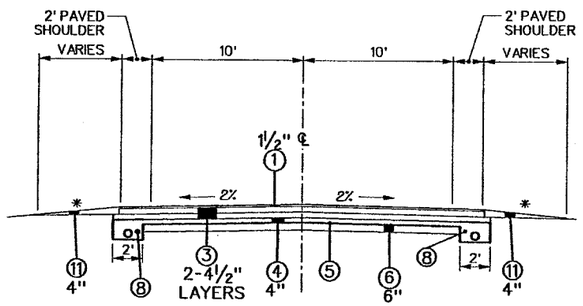

US 220
NORMAL SECTION
STA. 709+50.00 TO 709+53.55
STA. 734+25.00 TO 734+50.00

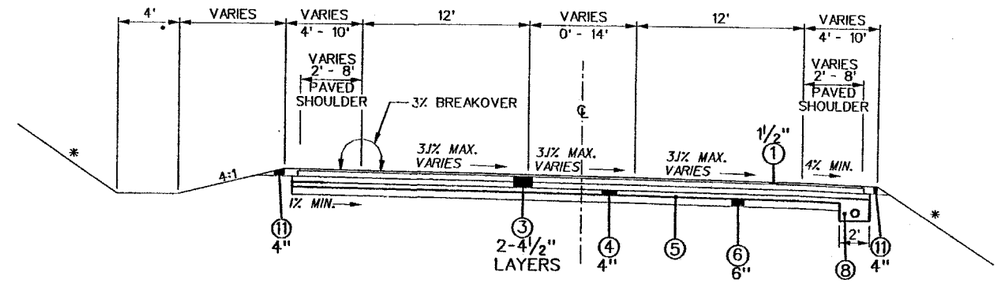

US 220
SUPERELEVATED SECTION RIGHT
STA. 709+53.55 TO 716+41.71

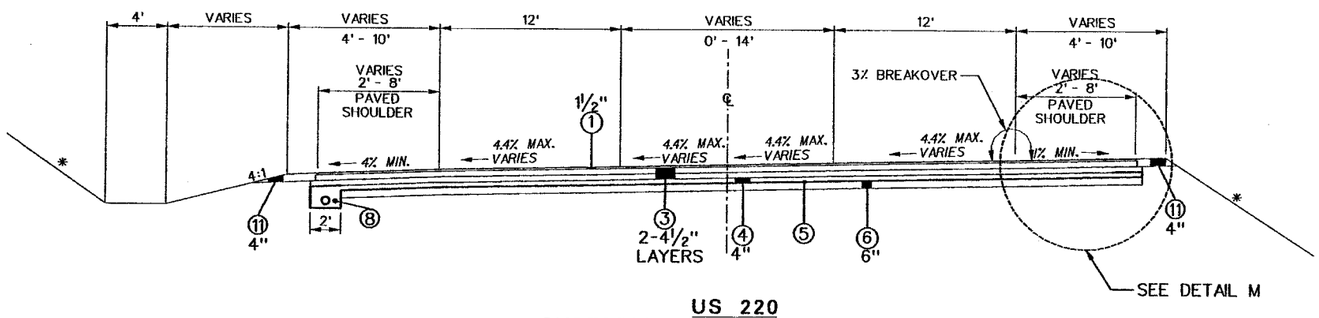

US 220
SUPERELEVATED SECTION LEFT
STA. 725+69.53 TO 734+25.00

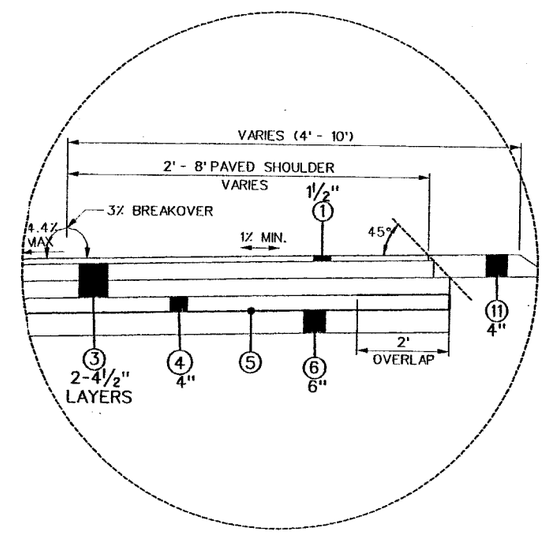

DETAIL M

LEGEND:

1. ITEM 402001-011 SUPERPAVE HOT MIX ASPHALT SKID RESISTANT PAVEMENT, TYPE 9.5, PER TON
2. ITEM 401001-011 SUPERPAVE HOT-MIX ASPHALT BASE COURSE, STONE OR GRAVEL, TYPE 19, PER TN
3. ITEM 401001-011 SUPERPAVE HOT MIX ASPHALT BASE COURSE, BASE I, TYPE 37.5, PER TON
4. ITEM 311006-001 OPEN GRADED FREE DRAINING BASE COURSE, PER CY
5. ITEM 207034-000 FABRIC FOR SEPARATION, PER SY
6. ITEM 207002-000 SUBGRADE , PER CY
8. ITEM 606029-001 FREE DRAINING BASE TRENCH, PER LF
9. ITEM 610006-005 MEDIAN, TYPE F, PER LF
10. ITEM 307001-001 AGGREGATE BASE COURSE STONE OR GRAVEL, CLASS 1, PER CY
11. ITEM 307001-001 AGGREGATE BASE COURSE STONE OR GRAVEL, CLASS 10, PER CY
12. ITEM 606030-001 OUTLET PIPE, PER LF

NOTE:

* - SLOPE VARIES, SEE CROSS SECTIONS

Baker
Michael Baker Jr., Inc.

REVISION NUMBER	SHEET NUMBER	REVISION	DATE	BY

THE WEST VIRGINIA DEPARTMENT OF TRANSPORTATION
DIVISION OF HIGHWAYS

TYPICAL SECTIONS

I:\proj\corridorh\sect6\contract 06\lindsas\const06\dvtypD8c.typ
11:32:42 AM
08/21/2003

Public Roads Div.	State Dist. No.	State Project No.	Federal Project No.	Fiscal Year	County	Sheet No.	Total Sheets
WV	5	X316 - H - 100.40 06	APD 0484 (251)C	2003	HARDY	10	670

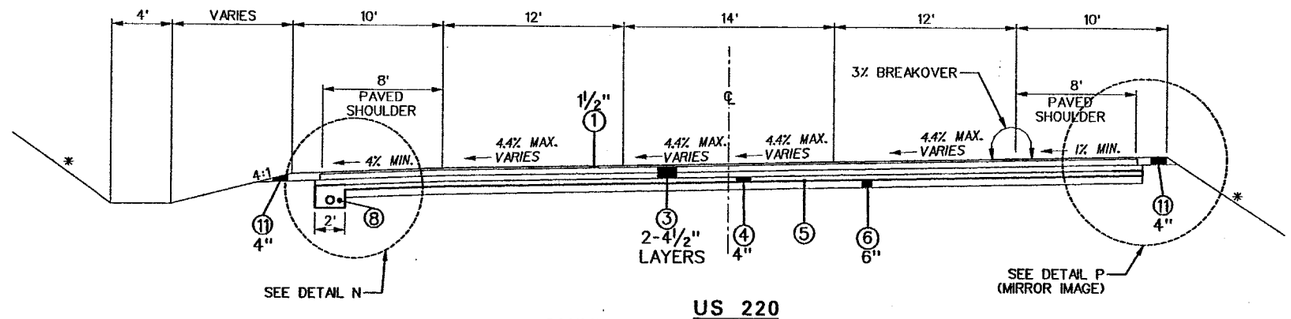

US 220
SUPERELEVATED SECTION LEFT
STA. 717+74.83 TO 725+69.53

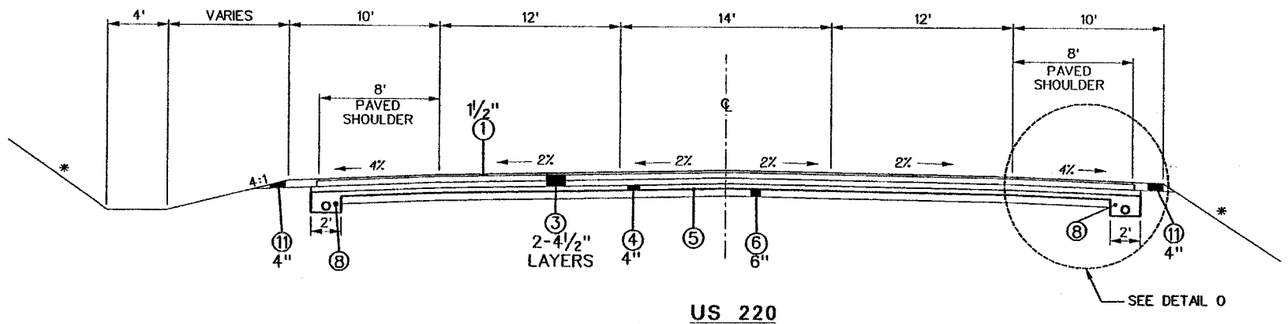

US 220
NORMAL SECTION
STA. 717+50.16 TO717+74.83

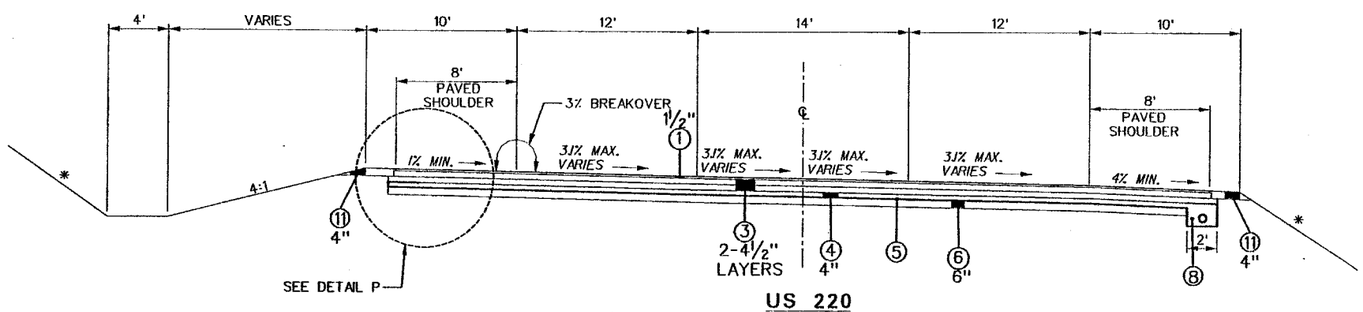

US 220
SUPERELEVATED SECTION RIGHT
STA. 709+53.55 TO 717+50.16

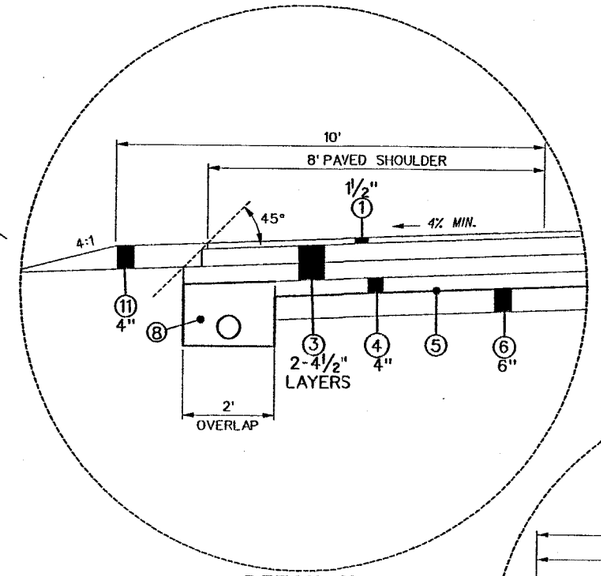

DETAIL N

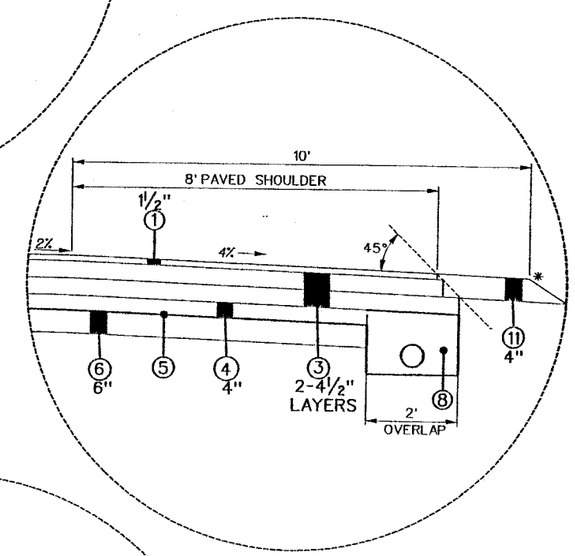

DETAIL O

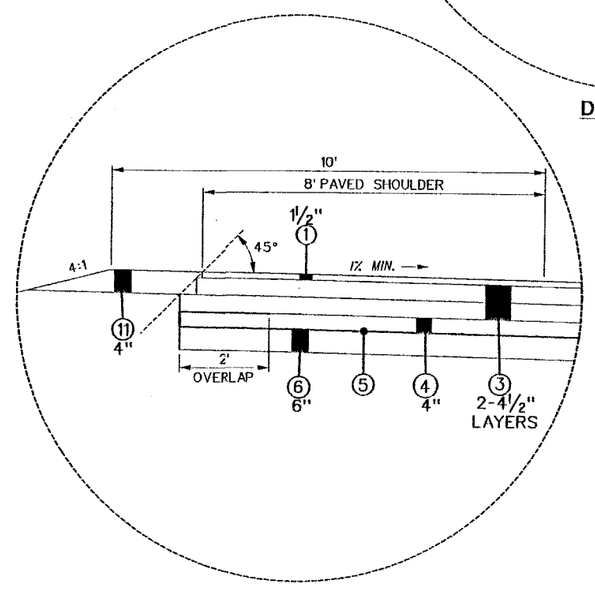

DETAIL P

LEGEND:

① ITEM 402001-011 SUPERPAVE HOT MIX ASPHALT SKID RESISTANT PAVEMENT, TYPE 9.5, PER TON
② ITEM 401001-011 SUPERPAVE HOT-MIX ASPHALT BASE COURSE, STONE OR GRAVEL, TYPE 19, PER TN
③ ITEM 401001-011 SUPERPAVE HOT MIX ASPHALT BASE COURSE, BASE I, TYPE 37.5, PER TON
④ ITEM 311006-001 OPEN GRADED FREE DRAINING BASE COURSE, PER CY
⑤ ITEM 207034-000 FABRIC FOR SEPARATION, PER SY
⑥ ITEM 207002-000 SUBGRADE , PER CY
⑧ ITEM 606029-001 FREE DRAINING BASE TRENCH, PER LF
⑨ ITEM 610006-005 MEDIAN, TYPE F, PER LF
⑩ ITEM 307001-001 AGGREGATE BASE COURSE STONE OR GRAVEL, CLASS 1, PER CY
⑪ ITEM 307001-001 AGGREGATE BASE COURSE STONE OR GRAVEL, CLASS 10, PER CY
⑫ ITEM 606030-001 OUTLET PIPE, PER LF

NOTE:
* - SLOPE VARIES, SEE CROSS SECTIONS

Baker
Michael Baker Jr., Inc.

REVISION NUMBER	SHEET NUMBER	REVISION	DATE	BY

THE WEST VIRGINIA DEPARTMENT OF TRANSPORTATION
DIVISION OF HIGHWAYS

TYPICAL SECTIONS

I:\proj\corridorh\sect6\contract 06\finales\cons106\dvtyp09c.typ
11:32:44 AM
08/21/2003

Public Roads Div.	State Dist. No.	State Project No.	Federal Project No.	Fiscal Year	County	Sheet No.	Total Sheets
WV	5	X316 - H - 100.40 06	APD 0484 (251)C	2003	HARDY	11	670

Item Number	ALT.	Description	Units	Quantity
		ROADWAY		
201001-000		CLEARING AND GRUBBING	LS	1
202001-000		BUILDING DEMOLITION NUMBER, 35-1/1	LS	1
202001-000		BUILDING DEMOLITION NUMBER, 35-1/2	LS	1
202001-000		BUILDING DEMOLITION NUMBER, 35-2/1	LS	1
202001-000		BUILDING DEMOLITION NUMBER, 36-1/1	LS	1
202001-000		BUILDING DEMOLITION NUMBER, 41-1/1	LS	1
202001-000		BUILDING DEMOLITION NUMBER, 41-1/2	LS	1
202001-000		BUILDING DEMOLITION NUMBER, 41-1/3	LS	1
202001-000		BUILDING DEMOLITION NUMBER, 41-A/1	LS	1
202002-000		WATER WELL ABANDONMENT NUMBER, 35-1/4	LS	1
202003-000		SEPTIC TANK ABANDONMENT NUMBER, 35-1/3	LS	1
204001-000		MOBILIZATION	LS	1
207001-001		UNCLASSIFIED EXCAVATION	CY	1,716,784
207002-000		SUBGRADE	CY	20,263
207034-000		FABRIC FOR SEPARATION	SY	164,514
208001-000		STORAGE TANK REMOVAL	EA	3
208002-000		BACKFILLING UNDERGROUND STORAGE TANK	EA	3
211002-000		ROCK BORROW EXCAVATION	CY	20,920
212001-000		STRUCTURE EXCAVATION	CY	300
212002-000		WET EXCAVATION	CY	610
307001-000		AGGREGATE BASE COURSE, CLASS 1	CY	8,262
307001-000		AGGREGATE BASE COURSE, CLASS 8	CY	13
307001-000		AGGREGATE BASE COURSE, CLASS 10	CY	1,162
311006-001		OPEN GRADED FREE DRAINING BASE COURSE	CY	13,630
406002-001		BITUMINOUS MATERIAL	GA	321
415005-001		REMOVE EXISTING PAVEMENT SURFACE	SY	75
501010-001		BRIDGE APPROACH EXPANSION JOINT (MODIFIED)	EA	2
501010-001		BRIDGE APPROACH EXPANSION JOINT	EA	4
502001-012		12 INCH PORTLAND CEMENT CONCRETE APPROACH SLAB	SY	1,203
601002-001		CLASS B CONCRETE	CY	149
602001-001		REINFORCING STEEL BAR	LB	2,300
604012-057		66X51 INCH HALF BITUMINOUS COATED AND PAVED INVERT CORRUGATED STEEL PIPE ARCH, C5	LF	160
604016-057		66X51 INCH CORRUGATED METAL PIPE ARCH END SECTION	EA	2
604020-099		152X97 INCH STRUCTURAL PLATE PIPE ARCH,D6	LF	88
605001-001		TYPE A MANHOLE	EA	1
605004-001		TYPE B INLET	EA	16
605009-001		TYPE G INLET	EA	32
606029-001		FREE DRAINING BASE TRENCH	LF	27,212
606030-001		OUTLET PIPE	LF	4,865
607001-001		TYPE 1 GUARDRAIL, CLASS I	LF	4,975
607006-001		THRIE BEAM GUARDRAIL BRIDGE TRANSITION	EA	12
607030-001		SPECIAL TRAILING END TERMINAL	EA	5
607065-001		FLARED END TERMINAL	EA	7
608001-004		5 FT RIGHT-OF-WAY FENCE, CHAIN LINK	LF	4,149
608002-001		3 FT X 11 IN RIGHT-OF-WAY FENCE, FARM FIELD	LF	16,025
609001-001		CONCRETE SIDEWALK	SY	843
609002-001		BED COURSE MATERIAL	CY	94
610001-002		PLAIN CONCRETE CURBING, TYPE II	LF	6,668
610005-001		BITUMINOUS CURB, TYPE I	LF	239
610006-005		MEDIAN, TYPE V	LF	5,150
633003-001		DUMPED ROCK GUTTER	CY	39
636005-001		TEMPORARY STRUCTURE FOR MAINTAINING TRAFFIC	LS	1
636007-001		ERADICATION OF PAVEMENT MARKING	LF	1,500
636008-001		TEMPORARY PAVEMENT MARKING-PAINT 4 IN SOLID LINE	LF	36,000
636011-001		TRAFFIC CONTROL DEVICE	UN	9,340
636012-010		PROJECT TRAFFIC CONTROL DEVICE CLEANING	EA	2

Item Number	ALT.	Description	Units	Quantity
		ROADWAY		
636013-001		INDIVIDUAL TRAFFIC CONTROL DEVICE CLEANING	EA	60
636014-001		FLAGGER	HR	3,000
636017-001		TEMPORARY CONCRETE BARRIER	LF	1,250
636022-001		CHANGAEBLE MESSAGE SIGN	DA	360
636025-001		WARNING LIGHTS, TYPE B	DA	1,080
636025-001		WARNING LIGHTS, TYPE C	DA	2,700
637001-001		WATER FOR DUST PALLIATIVE	MG	3,454
639001-001		CONSTRUCTION LAYOUT STAKE	LS	1
640002-001		LARGE FIELD OFFICE AND STORAGE BUILDING	MO	30
640003-001		BUILDING EQUIPMENT	LS	1
642001-001		TEMPORARY BERM	LF	9,300
642002-001		SLOPE DRAIN	LF	350
642004-001		SEED MIXTURE, TEMPORARY	LB	7,166
642004-002		SEED MIXTURE, B	LB	2,962
642004-003		SEED MIXTURE, D	LB	4,204
642005-001		MULCH, STRAW OR HAY	TN	256
642006-001		FERTILIZER	TN	51
642009-001		CONTOUR DITCH	LF	17,200
642010-001		AGRICULTURAL LIMESTONE	TN	192
642011-001		HAY OR STRAW BALE	EA	1,433
642012-001		SILT FENCE	LF	2,400
642015-001		SUPER SILT FENCE	LF	3,064
642031-001		DITCH CHECK	EA	197
642033-001		SEDIMENT TRAP	CY	1,600
642042-001		FLOCCULANT BLOCK	EA	9
642043-001		PREMANUFACTURED DITCH CHECK	EA	12
652001-001		AGRICULTURAL LIMESTONE	TN	35
652002-001		FERTILIZER, 10-20-10	TN	35
652003-001		SEED MIXTURES, B, C-1, OR C-2	LB	3,747
652003-002		SEED MIXTURE, D	LB	3,449
652004-001		STRAW OR HAY MULCH	TN	462
655001-001		MATTING	SY	23,524
655002-001		PERMANENT EROSION MATTING, TYPE A	SY	3,184
664001-008		IMPACT ATTENUATING DEVICE, TYPE IV	EA	2
665004-001		WATER WELL SURVEY	EA	1
		ROADWAY ALTERNATES		
401001-011	AA1	SUPERPAVE HOT-MIX ASPHALT BASE COURSE, STONE OR GRAVEL, TYPE 19	TN	16,696
401001-012	AA2	SUPERPAVE HOT-MIX ASPHALT BASE COURSE, SLAG, TYPE 19	TN	15,193
401001-011	BB1	SUPERPAVE HOT-MIX ASPHALT BASE COURSE, STONE OR GRAVEL, TYPE 37.5	TN	61,249
401001-012	BB2	SUPERPAVE HOT-MIX ASPHALT BASE COURSE, SLAG, TYPE 37.5	TN	55,737

Baker
Michael Baker Jr., Inc.

REVISION NUMBER	SHEET NUMBER	REVISION	DATE	BY

THE WEST VIRGINIA DEPARTMENT OF TRANSPORTATION
DIVISION OF HIGHWAYS

SUMMARY OF QUANTITIES

L:\proj\Corridor H\Sect5\Contract 06\FinalDes\Const06\dvsumqnt01.qnt
04:31:04 PM
03/01/2004

Public Roads Div.	State Dist. No.	State Project No.	Federal Project No.	Fiscal Year	County	Sheet No.	Total Sheets
WV	5	X316 - H - 100.40 06	APD 0484 (251)C	2003	HARDY	12	670

Item Number	ALT.	Description	Units	Quantity
402001-011	CC1	SUPERPAVE HOT-MIX ASPHALT SKID RESISTANT PAVEMENT, STONE OR GRAVEL, TYPE 9.5	TN	10,668
402001-012	CC2	SUPERPAVE HOT-MIX ASPHALT SKID RESISTANT PAVEMENT, SLAG, TYPE 9.5	TN	9,708
604076-016	DD1	18 INCH ALUMINUM COATED CORRUGATED STEEL PIPE, A2	LF	422
604009-016	DD1	18 INCH CORRUGATED STEEL PIPE END SECTION	EA	3
604025-016	DD2	18 INCH CORRUGATED ALUMINUM ALLOY PIPE, A7	LF	422
604028-016	DD2	18 INCH CORRUGATED ALUMINUM ALLOY PIPE END SECTION,	EA	3
604076-016	EE1	18 INCH ALUMINUM COATED CORRUGATED STEEL PIPE, A2	LF	1,461
604009-016	EE1	18 INCH CORRUGATED STEEL PIPE END SECTION	EA	2
604025-016	EE2	18 INCH CORRUGATED ALUMINUM ALLOY PIPE, A7	LF	1,461
604028-016	EE2	18 INCH CORRUGATED ALUMINUM ALLOY PIPE END SECTION,	EA	2
604037-016	EE3	18 INCH REINFORCED CONCRETE PIPE, CLASS II	LF	1,461
604038-016	EE3	18 INCH REINFORCED CONCRETE PIPE END SECTION	EA	2
604076-016	FF1	18 INCH ALUMINUM COATED CORRUGATED STEEL PIPE, A2	LF	28
604072-116	FF1	18 INCH CORRUGATED STEEL PIPE SAFETY SLOPE END SECTION	EA	2
604037-016	FF2	18 INCH REINFORCED CONCRETE PIPE, CLASS II	LF	28
604071-016	FF2	18 INCH REINFORCED CONCRETE PIPE SAFETY SLOPE END SECTION	EA	2
604076-020	GG1	24 INCH ALUMINUM COATED CORRUGATED STEEL PIPE, A2	LF	1,436
604009-020	GG1	24 INCH CORRUGATED STEEL PIPE END SECTION	EA	4
604025-020	GG2	24 INCH CORRUGATED ALUMINUM ALLOY PIPE, A7	LF	1,436
604028-020	GG2	24 INCH CORRUGATED ALUMINUM ALLOY PIPE END SECTION,	EA	4
604076-020	HH1	24 INCH ALUMINUM COATED CORRUGATED STEEL PIPE, A2	LF	1,318
604009-020	HH1	24 INCH CORRUGATED STEEL PIPE END SECTION	EA	5
604025-020	HH2	24 INCH CORRUGATED ALUMINUM ALLOY PIPE, A7	LF	1,318
604028-020	HH2	24 INCH CORRUGATED ALUMINUM ALLOY PIPE END SECTION,	EA	5
604037-020	HH3	24 INCH REINFORCED CONCRETE PIPE, CLASS II	LF	1,318
604038-020	HH3	24 INCH REINFORCED CONCRETE PIPE END SECTION	EA	5
604076-020	JJ1	24 INCH ALUMINUM COATED CORRUGATED STEEL PIPE, A2	LF	181
604072-120	JJ1	24 INCH CORRUGATED STEEL PIPE SAFETY SLOPE END SECTION	EA	3
604037-020	JJ2	24 INCH REINFORCED CONCRETE PIPE, CLASS II	LF	181
604071-020	JJ2	24 INCH REINFORCED CONCRETE PIPE SAFETY SLOPE END SECTION	EA	3
604025-022	KK1	30 INCH CORRUGATED ALUMINUM ALLOY PIPE, B2	LF	180
604037-022	KK2	30 INCH REINFORCED CONCRETE PIPE, CLASS II	LF	180
604002-022	LL1	30 INCH ALUMINUM COATED CORRUGATED STEEL PIPE, A2	LF	175
604025-022	LL2	30 INCH CORRUGATED ALUMINUM ALLOY PIPE, B2	LF	175
604037-022	LL3	30 INCH REINFORCED CONCRETE PIPE, CLASS II	LF	175
604025-024	MM1	36 INCH CORRUGATED ALUMINUM ALLOY PIPE, B2	LF	246
604037-024	MM2	36 INCH REINFORCED CONCRETE PIPE, CLASS II	LF	246
604076-024	NN1	36 INCH ALUMINUM COATED CORRUGATED STEEL PIPE, A2	LF	940
604009-024	NN1	36 INCH CORRUGATED STEEL PIPE END SECTION	EA	4
604025-024	NN2	36 INCH CORRUGATED ALUMINUM ALLOY PIPE, B2	LF	940
604028-024	NN2	36 INCH CORRUGATED ALUMINUM ALLOY PIPE END SECTION,	EA	4
604025-026	PP1	42 INCH CORRUGATED ALUMINUM ALLOY PIPE, B7	LF	769
604037-026	PP2	42 INCH REINFORCED CONCRETE PIPE, CLASS II	LF	769
604025-028	QQ1	48 INCH CORRUGATED ALUMINUM ALLOY PIPE, C7	LF	625
604037-028	QQ2	48 INCH REINFORCED CONCRETE PIPE, CLASS II	LF	625
604076-036	RR1	72 INCH ALUMINUM COATED CORRUGATED STEEL PIPE, B3	LF	1,755
604025-036	RR2	72 INCH CORRUGATED ALUMINUM ALLOY PIPE, D3	LF	1,755
636002-001	SS1	AGGREGATE FOR MAINTAINING TRAFFIC, STONE OR GRAVEL	TN	1,488
636002-002	SS2	AGGREGATE FOR MAINTAINING TRAFFIC, SLAG	TN	1,354
		SEDIMENT BASINS		
207001-001		UNCLASSIFIED EXCAVATION	CY	2,702
207034-000		FABRIC FOR SEPARATION	SY	2,410
211001-000		UNCLASSIFIED BORROW EXCAVATION	CY	8,181
211008-000		ROCK BORROW EXCAVATION	TN	5,177
211017-001		IMPERVIOUS CORE	SF	6,400
604001-020		24 INCH METALLIC COATED CORRUGATED STEEL PIPE, A2	LF	110
639001-001		CONSTRUCTION LAYOUT STAKE	LS	1
642035-001		RISER	EA	3
642036-001		SEDIMENT REMOVAL	CY	4,451

Item Number	ALT.	Description	Units	Quantity
		SANITARY SEWER RELOCATION (PRIVATE)		
639001-001		CONSTRUCTION LAYOUT STAKE	LS	1
675007-022		8 INCH PLASTIC SEWER PIPE	LF	985
675014-001		MANHOLE COMPLETE, INCLUDING CASTING	EA	7
675015-001		DROP MANHOLE COMPLETE, INCLUDING CASTING	EA	3
675021-320		18 INCH STEEL CASING PIPE, THICKNESS 0.375 INCH	LF	129
		FORCE MAIN (MOOREFIELD)		
639001-001		CONSTRUCTION LAYOUT STAKE	LS	1
675007-018		4 INCH PLASTIC SEWER PIPE, SDR21, 200 (psi) RATING, PUSH-ON JOINT	LF	1,885
675025-001		SPECIAL STRUCTURE, AIR RELEASE VALVE	EA	1
		SIGNALS		
660001-001		SIGNAL CONTROLLER (01)	LS	1
660002-005		TRAFFIC DETECTOR, LPS-C	EA	6
660003-006		SIGNAL SECTION, V-12	EA	22
660003-008		SIGNAL SECTION, V-8	EA	6
660004-040		SIGNAL SUPPORT, C1	EA	2
660004-042		SIGNAL SUPPORT, C1L	EA	2
660005-010		JUNCTION BOX, TYPE H	EA	4
660007-001		MISCELLANEOUS SIGNAL 01	LS	1
		SIGNING AND PAVEMENT MARKING		
657006-001		S4X7.7, A-441 SUPPORT, GALVANIZED	LF	308
657006-005		W6X12, A-441 SUPPORT, GALVANIZED	LF	149
657006-010		W8X18, A-441 SUPPORT, GALVANIZED	LF	81
657008-001		2.00 LB CHANNEL POST	LF	137
657010-001		3.00 LB CHANNEL POST	LF	1,916
657012-001		4.00 LB BACK TO BACK CHANNEL POST	LF	76
657017-001		CLASS B CONCRETE FOOTING, REINFORCED, ROADSIDE	CY	16.5
661001-001		0.080 IN FLAT SHEET SIGN	SF	1,331
661002-001		EXTRUDED PANEL SIGN	SF	770
661004-001		DELINEATOR, REFLEX REFLECTOR, SINGLE, WHITE	EA	7
661006-001		DELINEATOR, NINE PER UNIT, AMBER	UN	16
661007-001		DELINEATOR, THREE PER UNIT, AMBER	UN	8
661008-001		DELINEATOR BRACKET, TYPE A	EA	2
661013-001		PLASTIC DELINEATOR POST, WHITE	EA	133
663001-004		EDGE LINE, TYPE II,WHITE	LF	33,230
663001-004		EDGE LINE, TYPE II, YELLOW	LF	23,150
663002-005		LANE LINE OR CENTERLINE, TYPE II, WHITE	LF	4,785
663003-005		BARRIER LINE, TYPE II	LF	6,710
663004-004		CHANNELIZING LINE, TYPE II	LF	2,100
663005-010		STOP LINE, TYPE V (24")	LF	293
663006-010		CROSSWALK LINE, TYPE V (6")	LF	336
663007-010		STRIPE, TYPE V, WHITE (24")	LF	735
663007-010		STRIPE, TYPE V, WHITE (12")	LF	220
663007-010		STRIPE, TYPE V, YELLOW (12")	LF	3,137
663010-010		LANE ARROW, TYPE V	EA	27
663011-010		LANE LETTER, TYPE V	EA	36
663012-208		RAISED PAVEMENT MARKER, TYPE P-2	EA	226
		HIGHWAY LIGHTING		
662002-001		GALVANIZED STEEL CONDUIT, 01	LS	1
662006-001		JUNCTION BOX, TYPE A MODIFIED	EA	5
662006-001		JUNCTION BOX, TYPE H, 18 INCH X 18 INCH	EA	16
662007-001		LUMINAIRE, 250W	EA	26
662008-001		CABLE, 01	LS	1
662010-001		LIGHTING SUPPORT, TYPE I (40-10)	EA	2
662010-001		LIGHTING SUPPORT, TYPE I (40-15)	EA	9
662010-001		LIGHTING SUPPORT, TYPE I (40-20)	EA	13
662013-001		SERVICE AND CONTROL STATION, 01	LS	1
662014-001		INCIDENTAL ELECTRIC WORK	LS	1
662015-001		ELECTRICAL TEST	LS	1

Baker

Michael Baker Jr., Inc.

REVISION NUMBER	SHEET NUMBER	REVISION	DATE	BY

THE WEST VIRGINIA DEPARTMENT OF TRANSPORTATION
DIVISION OF HIGHWAYS

SUMMARY OF QUANTITIES

L:\proj\Corridorh\Sect6\Contract 06\FinalDes\Const06\drsumqnt02.QNT
01/14/2004 01:46:23 PM

Public Roads Div.	State Dist. No.	State Project No.	Federal Project No.	Fiscal Year	County	Sheet No.	Total Sheets
WV	5	X316 - H - 100.40 06	APD 0484 (251)C	2003	HARDY	13	670

Item Number	ALT.	Description	Units	Quantity
		BRIDGE # 10443 (INTERCHANGE)		
212005-000		SELECT MATERIAL FOR BACKFILLING	CY	90
601002-001		CLASS B CONCRETE	CY	127
601009-001		CLASS H CONCRETE	CY	442
601009-003		CLASS H CONCRETE, ARCHITECTURAL	CY	36
601014-001		TEST SLAB	LS	1
602002-001		EPOXY COATED REINFORCING STEEL BAR	LB	87,888
615001-001		STEEL SUPERSTRUCTURE	LS	1
616005-018		HP14X73 STEEL BEARING PILE, PRE-DRILLED AND DRIVEN	LF	641
617003-001		ALUMINUM RAILING, ANODIZED	LF	435
627017-001		INSTALL SILICONE EXPANSION JOINT SYSTEM	LF	14
639001-001		CONSTRUCTION LAYOUT STAKE	LS	1
662002-001		GALVANIZED STEEL CONDUIT	LS	1
662006-001		JUNCTION BOX, TYPE A (MODIFIED)	EA	1
626002-001	TT1	MSE RETAINING WALL, RETAINED EARTH	SF	7,048
626002-002	TT2	MSE RETAINING WALL, REINFORCED EARTH	SF	7,048
626002-003	TT3	MSE RETAINING WALL, ISOGRID	SF	7,048
626002-004	TT4	MSE RETAINING WALL, MSE PLUS	SF	7,048
626002-005	TT5	MSE RETAINING WALL, ARES	SF	7,048
		BRIDGE # 10444 (OVER FORT RUN)		
212001-000		STRUCTURE EXCAVATION	CY	186
212005-000		SELECT MATERIAL FOR BACKFILLING	CY	91
601002-001		CLASS B CONCRETE	CY	145
601009-001		CLASS H CONCRETE	CY	329
601009-003		CLASS H CONCRETE, ARCHITECTURAL	CY	25
601014-001		TEST SLAB	LS	1
602001-001		REINFORCING STEEL BAR	LB	27,056
602002-001		EPOXY COATED REINFORCING STEEL BAR	LB	58,919
615001-001		STEEL SUPERSTRUCTURE	LS	1
615029-001		NON-GUIDED BEARING	EA	20
617003-001		ALUMINUM RAILING, ANODIZED	LF	276
625001-012		36 INCH DIAMETER DRILLED CAISSONS	LF	147
625003-010		30 INCH ROCK SOCKET FOUNDATION	LF	184
625004-012		36 INCH DRILLED CAISSON TEST HOLE	LS	1
639001-001		CONSTRUCTION LAYOUT STAKE	LS	1
662002-001		GALVANIZED STEEL CONDUIT	LS	1
		BRIDGE # 10445 (OVER RAILROAD AND DUMPLING RUN)		
212001-000		STRUCTURE EXCAVATION	CY	400
212005-000		SELECT MATERIAL FOR BACKFILLING	CY	140
218004-001		6 INCH CRUSHED ROCK SLOPE PROTECTION	SY	1,250
601002-001		CLASS B CONCRETE	CY	633
601009-001		CLASS H CONCRETE	CY	1,969
601009-003		CLASS H CONCRETE, ARCHITECTURAL	CY	101
601014-001		TEST SLAB	LS	1
602001-001		REINFORCING STEEL BAR	LB	112,539
602002-001		EPOXY COATED REINFORCING STEEL BAR	LB	347,949
615001-001		STEEL SUPERSTRUCTURE	LS	1
615028-001		GUIDED BEARING	EA	16
615029-001		NON-GUIDED BEARING	EA	16
615030-001		FIXED BEARING	EA	8
617003-001		ALUMINUM RAILING, ANODIZED	LF	1,305
625001-016		48 INCH DIAMETER DRILLED CAISSONS	LF	409
625001-020		60 INCH DIAMETER DRILLED CAISSONS	LF	192
625003-014		42 INCH ROCK SOCKET FOUNDATION	LF	89
625003-018		54 INCH ROCK SOCKET FOUNDATION	LF	161
625004-020		60 INCH DRILLED CAISSON TEST HOLE	LS	1
639001-001		CONSTRUCTION LAYOUT STAKE	LS	1
662002-001		GALVANIZED STEEL CONDUIT	LS	1
662006-001		JUNCTION BOX, TYPE A (MODIFIED)	EA	4

Item Number	ALT.	Description	Units	Quantity
		STREAM STABILIZATION		
201001-000		CLEARING AND GRUBBING	LS	1
207001-001		UNCLASSIFIED EXCAVATION, SCOUR POOL	CY	31
207001-001		UNCLASSIFIED EXCAVATION	CY	865
639001-001		CONSTRUCTION LAYOUT STAKE	LS	1
641010-001		LIVE PLANT CUTTINGS, 2ft. LIVE STAKE	EA	432
641021-001		ROCK J - HOOK	CY	168
652003-003		SEED MIXTURE, WETLAND	LB	23
655002-001		PERMANENT EROSION MATTING, TYPE B	SY	720
		WATERLINE RELOCATION (HCPSD)		
639001-001		CONSTRUCTION LAYOUT STAKE	LS	1
670004-222		8 INCH DUCTILE IRON PIPE, TYPE II, CLASS 52	LF	100
670007-004		3/4 INCH PLASTIC PIPE, CLASS 200	LF	70
670007-022		8 INCH PLASTIC PIPE, CLASS 200	LF	1,820
670010-300		16 INCH STEEL CASING PIPE, THICKNESS 0.1875 INCH	LF	234
670015-040		3/4 INCH METER, HIGH PRESSURE SETTING	EA	1
670019-221		8 INCH SPECIAL VALVE, TAP AND SLEEVE WITH BOX	EA	2
		LANDSCAPING		
639001-001		CONSTRUCTION LAYOUT STAKE	LS	1
~~642005-003~~		~~MULCH, WOOD CHIPS~~	~~TN~~	~~2,242~~
642011-001		HAY OR STRAW BALE	EA	3,740
651001-001		FURNISHING AND PLACING TOPSOIL	CY	22,207
653001-001		VINES, FAST GROWING, PARTHENOCISSUS QUINQUEFOLIA	EA	350
653001-001		VINES, FAST GROWING, VITIS AESTIVALIS	EA	350
654001-001		TREE, DECIDUOUS, ACER RUBRUM	EA	29
654001-001		TREE, DECIDUOUS, BETULA LENTA	EA	13
654001-001		TREE, DECIDUOUS, NYSSA SYLVATICA	EA	38
654001-001		TREE, DECIDUOUS, OXYDENDRUM ARBOREUM	EA	30
654001-001		TREE, DECIDUOUS, PLATANUS OCCIDENTALIS	EA	24
654001-001		TREE, DECIDUOUS, PRUNUS SEROTINA	EA	41
654001-001		TREE, DECIDUOUS, QUERCUS PRIMUS	EA	27
654001-001		TREE, DECIDUOUS, QUERCUS RUBRA	EA	43
654003-001		SHRUB, DECIDUOUS, AMELANCHIER ABOREA	EA	101
654003-001		SHRUB, DECIDUOUS, CERCIS CANADENSIS	EA	142
654003-001		SHRUB, DECIDUOUS, RHUS GLABRA	EA	101
654003-001		SHRUB, DECIDUOUS, RHUS TYPHIRA	EA	76
654003-001		SHRUB, DECIDUOUS, VIBURNUM PRUNIFOLIUM	EA	66
654004-001		SHRUB, EVERGREEN, KALMIA LATIFOLIA	EA	167
654004-001		SHRUB, EVERGREEN, THUJA OCCIDENTALIS	EA	220
654005-001		TREE, EVERGREEN, JUNIPERUS VIRGINIANA	EA	20
654005-001		TREE, EVERGREEN, PINUS STROBUS	EA	27
654005-001		TREE, EVERGREEN, PINUS VIRGINIANA	EA	35
654005-001		TREE, EVERGREEN, IIEX OPACA	EA	35
654006-001		WATER FOR PLANTS	MG	54
		ON JOB TRAINING		
699000-001		ON JOB TRAINING	HR	2,000
		COMPUTER SYSTEM		
640004-001		COMPUTER SYSTEM FOR FIELD OFFICE	LS	1

Baker
Michael Baker Jr., Inc.

REVISION NUMBER	SHEET NUMBER	REVISION	DATE	BY
1	13	Item Deleted	—	—

THE WEST VIRGINIA DEPARTMENT OF TRANSPORTATION
DIVISION OF HIGHWAYS

SUMMARY OF QUANTITIES

L:\proj\Corridor H\Sect6\Contract 06\FinalDes\Const06\dvsumqnt03.qnt
12:57:31 PM
03/04/2004

Public Roads Div.	State Dist. No.	State Project No.	Federal Project No.	Fiscal Year	County	Sheet No.	Total Sheets
WV	5	X316 - H - 100.40 06	APD 0484 (251)C	2003	HARDY	14	670

GOVERNING SPECIFICATIONS

THE WEST VIRGINIA DEPARTMENT OF TRANSPORTATION, DIVISION OF HIGHWAYS, STANDARD SPECIFICATIONS ROADS AND BRIDGES, ADOPTED 2000, AS AMENDED BY THE WEST VIRGINIA DEPARTMENT OF TRANSPORTATION, DIVISION OF HIGHWAYS, SUPPLEMENTAL SPECIFICATIONS, DATED JANUARY 1, 2003, THE CONTRACT DOCUMENTS AND THE CONTRACT PLANS ARE THE GOVERNING PROVISIONS APPLICABLE TO THIS PROJECT.

EXISTING SIGNS AND DELINEATORS

ANY DELINEATORS OR SIGNS, DAMAGED OR REMOVED, BY THE CONTRACTOR SHALL BE REPLACED AT THE EXISTING LOCATION BY THE CONTRACTOR AT HIS EXPENSE.

PAVEMENT UNDERCUT

WHEN MATERIAL IS ENCOUNTERED AT SUBGRADE ELEVATION WHICH CANNOT BE COMPACTED TO THE REQUIRED DENSITY, IT SHALL BE UNDERCUT AND BACKFILLED WITH SELECT EMBANKMENT. THE VOLUME EXCAVATED SHALL BE PAID FOR AS ITEM 207001-001, UNCLASSIFIED EXCAVATION. THE BACKFILL SHALL BE SELECT EMBANKMENT AND BE PAIDED FOR AS ITEM 211002-000, ROCK BORROW EXCAVATION. THE TOP 6" OF THE BACKFILL SHALL BE MADE WITH PARTICLES NOT LARGER THAN 3". THE DECISION FOR UNDERCUTTING AND THE DEPTH OF THE UNDERCUT WILL BE DETERMINED BY THE ENGINEER.

BITUMINOUS PAVER

THE BITUMINOUS PAVER SHALL UTILIZE A 30 FOOT SKI ON ALL HOT ASPHALT MIX COURSES.

RUMBLE STRIPS IN PAVED SHOULDERS

RUMBLE STRIPS SHALL BE PLACED IN SHOULDERS UNDER THE FOLLOWING CONDITIONS, IN ACCORDANCE WITH THE SPECIAL DETAIL SHEET 53:

- TYPICAL PAVED SHOULDER WIDTH IS 8' OR MORE.
- MEDIAN SHOULDERS ON DIVIDED HIGHWAYS. IF SHOULDER WIDTH IS 3' OR GREATER.
- SHOULDERS ADJACENT TO ONE WAY RAMPS WHICH CONNECT TO ARTERIAL HIGHWAYS, IF TYPICAL SHOULDER IS 3' OR GREATER.

COST FOR RUMBLE STRIPS SHALL BE INCLUDED IN THE UNIT BID PRICE FOR ITEM 402001-011 SUPERPAVE HMA "HOT-MIX ASPHALT SKID RESISTANT PAVEMENT."

GEOTECHNICAL INFORMATION

ADDITIONAL GEOTECHNICAL INFORMATION MAY BE AVAILABLE IN THE FORM OF REPORTS OF GEOTECHNICAL AND SUBSURFACE INVESTIGATIONS. ANY INQUIRIES SHOULD BE DIRECTED TO:

JAMES E. SOTHEN, DIRECTOR
ENGINEERING DIVISION
WEST VIRGINIA DIVISION OF HIGHWAYS
BUILDING 5, ROOM 317
1900 KANAWHA BLVD., EAST
CHARLESTON, WV 25305

DUST PALLIATIVE

THE CONTRACTOR SHALL BE RESPONSIBLE FOR KEEPING THE DUST UNDER CONTROL, COST SHALL BE INCLUDED IN ITEM 637001-001, WATER FOR DUST PALLIATIVE.

WORK STOPPAGE

ANY WORK STOPPAGE INCURRED BY THE CONTRACTOR DUE TO HIS NEGLIGENCE OR FAILURE TO COMPLY WITH MITIGATION ITEM WILL BE AT THE CONTRACTOR'S EXPENSE WITH NO COMPENSATION FOR DOWN TIME.

EROSION CONTROL FEATURES INSTALLED BY THE CONTRACTOR WILL BE OPERATED AND MAINTAINED IN AN ACCEPTABLE CONDITION.

WHEN ANY EROSION OR SEDIMENT CONTROL FEATURE HAS REACHED HALF OF ITS CAPACITY, THE DEVICE IS TO BE CLEANED OUT AND RESTORED TO ITS ORIGINAL CONDITION.

THE CONTRACTOR WILL BE REQUIRED TO PREPARE A SPILL PREVENTION, CONTROL, AND COUNTER MEASURES (SPCC) PLAN THAT ITEMIZES SPECIFIC MEASURES THAT WILL BE IMPLEMENTED TO PREVENT AND CLEAN UP CHEMICAL AND PETROLEUM PRODUCT SPILLS THAT MAY OCCUR DURING ALL PHASES OF PROJECT CONSTRUCTION. FUEL STORAGE AND REFUELING ACTIVITIES, EQUIPMENT MAINTENANCE ACTIVITIES, AND EQUIPMENT WASHING WILL BE KEPT AT LEAST 500 FEET AWAY FROM ANY PERENNIAL OR INTERMITTENT WATERCOURSE OR WETLAND.

TYPE A & B INLET

ALL TYPE A AND B INLETS, THE STATION, ELEVATION AND OFFSET ARE MEASURED TO THE FACE OF CURB.

STORAGE TANK REMOVAL

THE REMOVAL OF THE THREE (3) STORAGE TANKS LOCATED LEFT OF STATION 717+60 +/- SHALL BE DONE AS SPECIFIED IN THE CONTRACT DOCUMENTS SPECIAL PROVISION. THE PAYMENT FOR THE REMOVAL SHALL BE PAID UNDER ITEM 208001-000 "STORAGE TANK REMOVAL", THE BACKFILLING SHALL BE PAID UNDER ITEM 208002-000 "BACKFILLING UNDERGROUND STORAGE TANK".

TEMPORARY SHEET PILE

SHEET PILES ARE NEEDED FOR THE UNDERCUT EXCAVATION AS SHOWN ON THE PLANS (ON SHEET'S 89 & 91). THE COST FOR THE SHEET PILES SHALL BE INCLUDED UNDER ITEM 207001-001, UNCLASSIFIED EXCAVATION. CONTRACTOR SHALL SUBMIT SHORING PLANS TO THE ENGINEER FOR APPROVAL AND COORDINATION WITH SOUTH BRANCH VALLEY RAILROAD.

REMOVAL OF DRAINAGE STRUCTURES

ALL EXISTING DRAINAGE STRUCTURES, HEADWALLS AND PIPES SHOWN TO BE REMOVED SHALL BECOME THE PROPERTY OF THE CONTRACTOR. THE COST OF THE REMOVAL OF EXISTING PIPES, INLETS, AND HEADWALLS SHALL BE INCLUDED IN THE UNIT BID PRICE FOR ITEM 201001-000 "CLEARING AND GRUBBING", AND TO INCLUDE REMOVAL, DISPOSAL, AND BACKFILL WITH SUITABLE MATERIAL, NO ADDITIONAL PAYMENT OR MEASUREMENT WILL BE MADE FOR THIS.

WATER QUALITY

THE CONTRACTOR WILL BE RESPONSIBLE FOR WATER QUALITY THROUGHOUT THE DURATION OF CONSTRUCTION. THE PROJECT ENGINEER WILL WORK CLOSELY WITH THE PROJECT SUPERINTENDENT. THE CONTRACTOR WILL BE RESPONSIBLE FOR THE FOLLOWING:

1. DEVELOPING AND IMPLEMENTING AN EFFECTIVE EROSION CONTROL PLAN.
2. DIRECTING THE CONSTRUCTION, OPERATION, AND DISMANTLING OF TEMPORARY EROSION CONTROL FEATURES
3. IMPLEMENTING REMEDIAL ACTION REQUIRED TO REPAIR FAILING EROSION AND SEDIMENTATION CONTROL FEATURES.
4. IMPLEMENTING STORM AND WINTER SHUTDOWN PROCEDURES.
5. WILL SHAPE THE EARTHWORK PRIOR TO THE SUSPENSION OF GRADING OPERATIONS EACH DAY IN A MANNER THAT WILL PERMIT STORM RUNOFF WITH A MINIMUM OF EROSION.
6. EROSION CONTROL FEATURES INSTALLED BY THE CONTRACTOR WILL BE OPERATED AND MAINTAINED IN AN ACCEPTABLE CONDITION.
7. WHEN ANY EROSION OR SEDIMENT CONTROL FEATURE HAS REACHED HALF OF ITS CAPACITY, THE DEVICE IS TO BE CLEANED OUT AND RESTORED TO ITS ORIGINAL CONDITION.

THE CONTRACTOR WILL BE REQUIRED TO PREPARE A SPILL PREVENTION, CONTROL, AND COUNTERMEASURES (SPCC) PLAN THAT ITEMIZES SPECIFIC MEASURES THAT WILL BE IMPLEMENTED TO PREVENT AND CLEAN UP CHEMICAL AND PETROLEUM PRODUCT SPILLS THAT MAY OCCUR DURING ALL PHASES OF PROJECT CONSTRUCTION. FUEL STORAGE, REFUELING ACTIVITIES, EQUIPMENT MAINTENANCE ACTIVITIES, AND EQUIPMENT WASHING WILL BE KEPT AT LEAST 500 FEET AWAY FROM ANY PERENNIAL OR INTERMITTENT WATERCOURSE OR WETLAND.

EQUIPMENT - NOISE ABATEMENT

THE CONTRACTOR WILL BE REQUIRED TO USE OPERABLE MUFFLERS ON CONSTRUCTION EQUIPMENT AT ALL TIMES ON THIS PROJECT.

OPEN-GRADED FREE DRAINING BASE COURSE

THE CONTRACTOR SHALL NOT PERMIT HEAVY EQUIPMENT TO USE THE ROAD BED AFTER THE FREE DRAINING BASE HAS BEEN PLACED. THE SURFACE OF THE FREE DRAINING BASE WILL NOT BE USED AS A HAUL ROAD. THE CONTRACTOR SHALL BE RESPONSIBLE FOR REPLACEMENT OF ANY SECTION OF FREE DRAINNG BASE, FREE DRAINING BASE TRENCH AND OUTLET PIPE DAMAGE BY CONSTRUCTION ACTIVITIES SUBSEQUENT TO PLACEMENT. DAMAGED AREAS SUBJECT TO REPLACEMENT SHALL BE DETERMINED BY THE PROJECT ENGINEER. NO ADDITIONAL PAYMENT OR COMPENSATION WILL BE MADE FOR THESE REPAIRS.

DESIGN ESAL VALUE

THE DESIGN ESAL VALUE ON THIS PROJECT SHALL BE 15 MILLION.

VERIFICATION OF DIMENSIONS

THE CONTRACTOR IS RESPONSIBLE FOR VERIFICATION OF ALL PLAN AND ELEVATION DIMENSIONS PRIOR TO ORDERING MATERIALS FOR THE CONSTRUCTION OF THE VARIOUS BID ITEMS ON THIS PROJECT.

BLASTING NEAR HISTORIC RESOURCES

THE LOCATION OF HISTORIC STRUCTURES PROTECTED BY SECTION 106 ARE SHOWN ON THE PLANS OR LISTED BELOW. THE CONTRACTOR IS TO EXERCISE CAUTION DURING BLASTING OPERATIONS TO PREVENT ANY DAMAGE TO THESE STRUCTURES. ANY DAMAGE DONE WILL BE REPAIRED AT THE CONTRACTOR'S EXPENSE.

HISTORIC PROPERTIES

HISTORIC PROPERTIES WITHIN THE CONFINES OF THE PLANS AS PRESENTED HAVE BEEN INDICATED BY CROSS-HATCHING WITHIN THE BOUNDARIES. THERE WILL BE NO WORK PERMITTED ON THESE PROPERTIES AT ANY TIME.

TEMPORARY PAVEMENT FOR MOT

THE CONTRACTOR SHALL REMOVE ALL TEMPORARY PAVEMENT AFTER CONSTRUCTION AND THE AREA TO BE SEEDED AND MULCHED. PAVEMENT REMOVAL SHALL BE PAID UNDER UNCLASSIFIED EXCAVATION.

WOODEN POSTS (APPALACHIAN REGION)

ALL GUARDRAIL POSTS AND BLOCKS SHALL BE PRESSURE TREATED WOOD FROM THE APPALACHIAN REGION IN ACCORDANCE WITH SECTION 607 OF THE SPECIFICATIONS. ALL POSTS AND BRACES FOR RIGHT OF WAY FENCE, FARM FIELD TYPE, SHALL BE PRESSURE TREATED WOOD IN ACCORDANCE WITH SECTION 608 OF THE SPECIFICATIONS.

Baker
Michael Baker Jr., Inc.

REVISION NUMBER	SHEET NUMBER	REVISION	DATE	BY

THE WEST VIRGINIA DEPARTMENT OF TRANSPORTATION
DIVISION OF HIGHWAYS

GENERAL NOTES

L:\proj\CorridorH\Sect6\Contract 06\FinalDes\Const06\dvgn01.gns
12:17:25 PM
10/08/2003

Public Roads Div.	State Dist. No.	State Project No.	Federal Project No.	Fiscal Year	County	Sheet No.	Total Sheets
WV	5	X316 - H - 100.40 06	APD 0484 (251)C	2003	HARDY	14A	670

DRAINAGE

THE LOCATION OF ALL KNOWN CULVERTS, INLETS, AND OTHER DRAINAGE ITEMS SHOWN ON THE CONTRACT PLANS ARE BASED ON THE BEST AVAILABLE INFORMATION FROM EXISTING PLANS AND FIELD INFORMATION. THE CONTRACTOR SHALL BE RESPONSIBLE FOR DETERMINING THE FINAL EXACT LOCATION.

THE CONTRACTOR SHALL MAINTAIN WORKING STORM DRAINAGE SYSTEMS THROUGHOUT THE WORK AREAS AT ALL TIMES DURING CONSTRUCTION. THE WORKING SYSTEM MAY CONSIST OF THE EXISTING STORM DRAINAGE SYSTEM, THE PROPOSED STORM DRAINAGE SYSTEM, OR A COMBINATION THEREOF. NO ADDITIONAL PAYMENT OR COMPENSATION WILL BE MADE FOR THIS WORK.

DRAINAGE PIPES FOR THE PROPOSED SYSTEMS SHALL BE CONSTRUCTED IN SECTION LENGTHS NECESSARY TO MAINTAIN THE LANES OF TRAFFIC INDICATED IN THE MAINTENANCE OF TRAFFIC NOTES.

ALL PIPES TO BE EXTENDED SHALL BE CONNECTED WITH A METAL BAND OR CONCRETE COLLAR AS DIRECTED BY THE PROJECT ENGINEER. THE CONTRACTOR SHALL COMPLETELY REMOVE EXISTING HEADWALLS AND INLETS AFFECTED BY THE EXTENSIONS.

THE CONTRACTOR IS RESPONSIBLE FOR ESTABLISHING FINAL ELEVATIONS ON ALL DRAINAGE STRUCTURES. DRAINAGE STRUCTURE ELEVATIONS ARE TO MATCH FINAL ELEVATIONS ON PARKING LOTS, DRIVEWAYS, CURB & GUTTER, AND ROADWAY PAVEMENT.

THE COST OF THE REMOVAL OR PLUGGING OF AN EXISTING PIPE SHALL BE INCLUDED IN ITEM 201001-000 THE COST OF CONNECTING PROPOSED DRAINAGE PIPES TO AN EXISTING PIPES OR INLETS SHALL BE INCLUDED IN THE UNIT BID PRICE OF THE PROPOSED PIPE.

UTILITIES

THE LOCATIONS OF ALL KNOWN UTILITIES ARE SHOWN ON THE CONTRACT PLANS BASED ON THE BEST AVAILABLE INFORMATION FROM EXISTING PLANS AND FIELD INFORMATION. IT IS THE CONTRACTOR'S RESPONSIBILITY TO ASCERTAIN THE STATUS AND LOCATION OF EACH UTILITY WHEN PERFORMING WORK WHICH MAY AFFECT THESE FACILITIES, INCLUDING PROBING, EXCAVATION, OR ANY OTHER PRECAUTION REQUIRED TO CONFIRM LOCATION. THE CONTRACTOR WILL BE RESPONSIBLE FOR ANY DAMAGE OR DISRUPTION TO UTILITY LINES WHICH ARE KNOWN ACTIVE AND ARE TO REMAIN IN OPERATION.

EROSION AND SEDIMENT CONTROL

DETAILS NOT SHOWN IN THE PLANS SHALL BE IN ACCORDANCE WITH THE WEST VIRGINIA DEPARTMENT OF HIGHWAYS EROSION AND SEDIMENT CONTROL MANUAL, DATED MARCH 1, 2003. IN THE EVENT THAT TEMPORARY EROSION AND POLLUTION CONTROL MEASURES ARE REQUIRED DUE TO THE CONTRACTOR'S NEGLEGENCE, CARELESSNESS, OR FAILURE TO INSTALL PERMANENT CONTROLS AS PART OF THE WORK AS SCHEDULED, AND ARE ORDERED BY THE ENGINEER, SUCH WORK PERFORMED SHALL BE PERFORMED BY THE CONTRACTOR AT HIS OWN EXPENSE.

THE FIRST ORDER OF WORK FOR THE CONTRACTOR IS TO INSTALL SEDIMENT CONTROL STRUCTURES, SILT FENCE, HAY/STRAW BALES, ETC. TO ESTABLISH EROSION CONTROL AT THE EARLIEST POSSIBLE DATE. INITIAL CLEARING AND GRUBBING IS TO ONLY BE WHAT IS NECESSARY IN ORDER TO ACCOMPLISH THESE OPERATIONS.

IN ADDITION, THE CONTRACTOR IS TO NAME AN INDIVIDUAL TO REVIEW THE EROSION CONTROL FEATURES AT A MINIMUM OF ONCE A WEEK DURING PERIODS OF HEAVY PRECIPITATION AND/OR ACTIVE CONSTRUCTION AND ONCE A MONTH DURING WINTER SHUTDOWN TO ASSESS THE SUCCESS OF THE EROSION CONTROL STRUCTURES, REVEGETATION EFFORTS, AND SEE THAT REPLACEMENT, CLEANING, AND/OR INSTALLATION OF ADDITIONAL FEATURES IF NECESSARY ARE CARRIED OUT.

IN ADDITION TO THE ENVIRONMENTAL MONITOR, PERIODICAL INSPECTIONS WILL BE CONDUCTED BY A REPRESENTATIVE OF THE WEST VIRGINIA DEPARTMENT OF ENVIRONMENTAL PROTECTION, DIVISION OF WATER AND WASTE MANAGEMENT TO ENSURE THAT THE REQUIREMENTS OF THE NATIONAL POLLUTANT DISCHARGE ELIMINATION SYSTEM (NPDES) PERMIT IS BEING FULFILLED. REPRESENTATIVES OF THE OTHER RESOURCE AGENCIES MAY CONDUCT PERIODIC INSPECTIONS THROUGH THE LIFE OF THE CONTRACT.

WORKING HOURS

NO WORK SHALL BE PERFORMED BETWEEN THE HOURS OF 10:00 PM AND 6:00 AM WITHIN A 600 FEET RADIUS OF A RESIDENTIAL AREA (OCCUPIED RESIDENCE).

RAILROAD FLAGGING

THE DIVISION OF HIGHWAYS, IN CONJUNCTION WITH THIS RAILROAD, HAS ESTIMATED THE NUMBER OF FLAGGING HOURS FOR THE CONSTRUCTION OF THE SUBJECT PROJECT TO BE 800. THE DIVISION OF HIGHWAYS WILL DIRECTLY REIMBURSE THE RAILROAD FOR YOUR USE OF THESE HOURS. ADDITIONAL HOURS FOR YOUR USE CAN BE ADDED IF THEY CAN BE JUSTIFIED. HOURS USED SOLELY FOR THE BENEFIT OF YOU, THE CONTRACTOR, WILL BE DEDUCTED FROM YOUR PAY ESTIMATE. MORE DETAIL CONCERNING RAILROAD FLAGGING IS FOUND IN SECTION 107.8 OF THE STANDARD SPECIFICATIONS.

EXISTING LEVEE

CONTRACTORS SHALL NOT OPERATE OR DRIVE VEHICLES ON TOP OF THE LEVEE. IF ACCESS IS NEEDED TO THE TOP OF THE LEVEE, CONTRACTOR MUST CONTACT MOOREFIELD TOWN OFFICE AT 304-538 6142 OR THE LEVEE SUPERINTENDENT, CHUCK SILLIMAN AT 304-668 0262. FOR TECHNICAL SUPPORT REGARDING THE LEVEE CALL PETE MAGETTI, COE BALTIMORE OFFICE AT 410-962 4281. THE CONTRACTOR SHALL MAINTAIN THE LEVEE TOP OF PROTECTION ELEVATION AT ALL TIMES.

WATER WELL SURVEY

WATER WELL SURVEY IS REQUIRED AT THE FOLLOWING LOCATION:

WAT 35-1/4 STA. 718+59 (US 220) OFFSET 110' LT

ALL WORK REQUIRED FOR SURVEYING THE WATER WELLS SHALL BE PAID UNDER BID ITEM 665004-001.

NOTICE TO CONTRACTORS

IT IS TO BE ANTICIPATED THAT OTHER CONTRACTORS WILL BE WORKING IN THIS AREA, AND IT IS IMPERATIVE THAT A STRICT PLAN OF COORDINATION BETWEEN CONTRACTORS BE AGREED ON IN REFERENCE TO WORKING PLANS AND STORAGE AREAS. THIS PLAN OF COORDINATION WILL BE PRESENTED TO THE RESPECTIVE ENGINEERS IN WRITING FOR THEIR REVIEW.

IN ADDITION, THE WVDOH WILL HAVE CONSULTANTS IN THE AREA PERFORMING VARIOUS TESTS, TAKING SAMPLES AND OBSERVING CERTAIN OPERATIONS TO ENSURE THAT THE COMMITMENTS AGREED TO DURING THE FINALIZATION OF THE ENVIRONMENT DOCUMENT ARE BEING FOLLOWED.

ALSO REPRESENTATIVES OF THE FOLLOWING STATE AND FEDERAL AGENCIES WILL BE IN THE AREA ON OCCASION TO OBSERVE AND MONITOR THE CONSTRUCTION:

WEST VIRGINIA DEPARTMENT OF ENVIRONMENTAL PROTECTION
WEST VIRGINIA DIVISION OF NATURAL RESOURCES
WEST VIRGINIA STATE HISTORIC PRESERVATION OFFICE
UNITED STATES FISH & WILDLIFE SERVICE
UNITED STATES ENVIRONMENTAL PROTECTION AGENCY
UNITED STATES ARMY CORPS OF ENGINEERS
UNITED STATES NATURAL RESOURCES CONSERVATION SERVICE
ADVISORY COUNCIL OF HISTORIC PRESERVATION
UNITED STATE DEPARTMENT OF AGRICULTURE, FOREST SERVICE

BUILDING DEMOLITION & ASBESTOS ABATEMENT

MINOR SHEDS WHICH REMAIN WITHIN THE STRUCTURE REMOVAL EASEMENT AT THE TIME OF CONSTRUCTION ARE TO BE REMOVED UNDER ITEM 201001-000. "CLEARING AND GRUBBING".

THE CONTRACTOR IS HEREBY ADVISED THAT ASBESTOS ABATEMENT REPORTS ARE NOT AVAILABLE AS OF THE LETTING DATE FOR SOME/ALL OF THE BUILDINGS LISTED ON THE "BUILDING DEMOLITION & ASBESTOS ABATEMENT" TABLE ON SHEET 24. THEREFORE, THE CONTRACTOR WILL NOT BE ALLOWED TO PERFORM THE BUILDING DEMOLITION ON THOSE BUILDINGS UNTIL SUCH TIME AS THE ASBESTOS INSPECTIONS ARE COMPLETED BY THE WEST VIRGINIA DEPARTMENT OF TRANSPORTATION, DIVISION OF HIGHWAYS.

IF THE ASBESTOS INSPECTIONS REVEAL THAT ASBESTOS IS PRESENT IN ANY FORM IN ANY BUILDING TO BE DEMOLISHED, THE REPORT WILL BE MADE AVAILABLE TO THE CONTRACTOR, AND THE CONTRACTOR SHALL ARRANGE FOR THE ASBESTOS ABATEMENT TO BE PERFORMED BY A FIRM LICENSED IN THE STATE OF WEST VIRGINIA TO PERFORM SUCH WORK. THIS WORK, IF REQUIRED, SHALL BE PERFORMED ACCORDING TO THE WEST VIRGINIA DEPARTMENT OF TRANSPORTATION, DIVISION OF HIGHWAYS SPECIAL PROVISION FOR ASBESTOS ABATEMENT, SECTION 681.

ADDITIONAL PAYMENT FOR ANY REQUIRED ASBESTOS ABATEMENT WILL BE MADE ACCORDING TO THE WEST VIRGINIA DEPARTMENT OF TRANSPORTATION, DIVISION OF HIGHWAYS STANDARD SPECIFICATIONS, SECTION 104, SCOPE OF WORK.

ENVIRONMENTAL MONITOR

THE WVDOH IS UTILIZING A FULL TIME ENVIRONMENTAL MONITOR ON THE CORRIDOR H PROJECT TO ASSURE THAT MITIGATION COMMITMENTS DEVELOPED IN THE ENVIRONMENTAL IMPACT STATEMENT AND THE DESIGN PROCESS ARE CARRIED OUT THROUGH THE CONSTRUCTION PHASE OF THE PROJECT. THE ENVIRONMENTAL MONITOR FOR THE WVDOH IS CHARLES RILING.
MR. RILING CAN BE CONTACTED AT (304) 558-0601
THE ENVIRONMENTAL MONITOR'S RESPONSIBILITIES ARE BUT NOT LIMITED TO, THE FOLLOWING:

1. REPORT DIRECTLY TO THE STATE HIGHWAY ENGINEER OR HIS DESIGNEE.
2. PARTICIPATE IN THE MANDATORY PRE-BID CONFERENCE AND PRE-CONSTRUCTION MEETING WITH THE CONTRACTORS IN ORDER TO EXPLAIN THE MITIGATION MEASURES AND PERMIT CONDITIONS INCLUDED WITHIN EACH CONSTRUCTION PROJECT.
3. ASSURE THAT CONTRACTORS ARE PROPERLY CONSTRUCTING, INSTALLING, AND/OR MAINTAINING REQUIRED MITIGATION MEASURES.
4. ASSURE THAT CONTRACTORS ARE PROPERLY CONSTRUCTING, INSTALLING AND MAINTAINING REQUIRED EROSION AND SEDIMENTATION CONTROL MEASURES.
5. CONDUCT MONITORING IN ORDER TO DETERMINE COMPLIANCE WITH STATE WATER QUALITY STANDARDS.
6. ASSURE THAT ALL PERMIT CONDITIONS ARE BEING ADHERED TO DURING THE CONSTRUCTION PHASE.
7. ADVISE AGENCIES OF MAJOR CONSTRUCTION OPERATIONS WHICH MAY HAVE IMPACT ON WATER QUALITY, NATURAL RESOURCES, CULTURAL RESOURCES, AND WILL ATTEND ALL FIELD REVIEWS CONDUCTED WITH THE AGENCIES DURING CONSTRUCTION.
8. WILL OVERSEE WATER QUALITY MONITORING, BY INDEPENDENT CONSULTANTS, DURING THE CONSTRUCTION TO ASSURE COMPLIANCE WITH ALL PERMIT CONDITIONS AND EFFECTIVENESS OF EROSION AND SEDIMENT CONTROL PLANS.

IN ADDITION TO THE ABOVE, THE ENVIRONMENTAL MONITOR HAS THE AUTHORITY TO SHUT DOWN THE CONSTRUCTION PROJECT WHERE ANY OPERATION RESULTS IN CONSTRUCTION IMPACTS TO WATER QUALITY, NATURAL RESOURCES, OR CULTURAL RESOURCES. WORK WILL NOT BE PERMITTED TO RESUME UNTIL THE APPROPRIATE CORRECTIVE ACTION HAS BEEN INSTITUTED OR COMPLETED.

COORDINATES

COORDINATES SHOWN ON THESE PLANS ARE BASED ON WEST VIRGINIA NORTH ZONE PLANE COORDINATES 1983.

ELEVATIONS

ALL ELEVATIONS SHOWN REFER TO NATIONAL GEODETIC VERTICAL DATUM OF 1929.

Baker
Michael Baker Jr., Inc.

REVISION NUMBER	SHEET NUMBER	REVISION	DATE	BY

THE WEST VIRGINIA DEPARTMENT OF TRANSPORTATION
DIVISION OF HIGHWAYS

GENERAL NOTES

L:\proj\Corridorh\Sect6\Contract 06\FinalDes\Const06\dvgn02.gms
12:46:21 PM
02/13/2004

Public Roads Div.	State Dist. No.	State Project No.	Federal Project No.	Fiscal Year	County	Sheet No.	Total Sheets
WV	5	X316 - H - 100.40 06	APD 0484 (251)C	2003	HARDY	15	670

NOISE RESTRICTION

NO WORKING WITHIN 600 FEET OF AN OCCUPIED RESIDENCE DURING THE HOURS BETWEEN 10 PM AND 6 AM.

STRIPPING AND STOCKPILING OF TOP SOIL

THE CONTRACTOR WILL BE REQUIRED TO STRIP TOPSOIL FROM THOSE AREAS WITHIN THE CONSTRUCTION LIMITS NOT FORESTED OR DESIGNATED WETLANDS. THE CONTRACTOR IS REQUIRED TO STOCKPILE THIS TOPSOIL. TOPSOIL STOCKPILED WILL BE CLEARLY MARKED WITH IDENTIFICATION SIGNS. TOPSOIL WILL BE STORED SEPARATELY FROM OTHER EARTH MATERIALS TO AVOID CONTAMINATION OR MIXING. IF TOPSOIL IS STOCKPILED FOR MORE THAN ONE YEAR, STOCKPILES ARE TO BE SEEDED WITH NATIVE GRASSES FOR EROSION CONTROL. THIS TOP SOIL SHALL BE REDISTRIBUTED IN AREAS AS DESIGNATED BELOW.

THOSE GENERAL AREAS TO BE STRIPPED ARE LOCATED AT:

MAINLINE:
STA.1700+00 TO STA.1782+50 - 41,122 CY

US 220 RAMP CONNECTOR
STA.800+50 TO STA.835+00 - 36,866 CY

RAMP 1
STA.110+00 TO STA.120+00 - 8,035 CY

RAMP 4
STA.410+50 TO STA.423+60.90 - 8,450 CY

ACCESS ROAD 11
STA.11+00 TO STA.18+00 - 2,270 CY

ACCESS ROAD 14
STA.41+00 TO STA.51+52 - 3,112 CY

THOSE GENERAL AREAS FOR PLACING TOPSOIL ARE LOCATED AT:

1. VEGETATIVE SCREENING AND LANDSCAPING AREAS (SEE LANDSCAPING PLANS)
2. FILL SLOPES 3:1 OR FLATTER
3. WASTE SITE (RDA PROPERTY)

ARCHEOLOGICAL SITE AREA WORK RESTRICTIONS (FOR INFORMATION ONLY)

ARCHEOLOGICAL SITES WILL BE FENCED OFF WITH CONSTRUCTION FENCING AND FLAGGED IN COORDINATION WITH BAKER AND WVSHPO. THE LOCATION OF THESE SITES ARE AS FOLLOWS:

US 220 - 709+50 TO 734+50
US 220 RAMP CONNECTOR - 800+50 TO 833+00
DUMPLING RUN OVERFLOW CHANNEL - 550+00 TO 572+00
MAINLINE - 1701+15 TO 1740+00 (INCLUDING RAMPS AND SEDIMENT PONDS)
MAINLINE - 1743+00 TO 1782+50 (INCLUDING RAMPS AND SEDIMENT PONDS)

SILTSTONE FILL

ON THIS PROJECT THERE ARE TWO AREAS OF FILLING THAT REQUIRE THE PLACEMENT OF A SILTSTONE FILL LAYER. THE AREAS ARE LOCATED BETWEEN MAINLINE STATION 1702+00 TO STATION 1740+00 AND THE US 220 RAMP CONNECTOR STATION 806+00 TO STATION 834+00. A SPECIAL PROVISION HAS BEEN INCLUDED IN THE PLANS THAT SET FORTH REQUIREMENTS THAT THE CONTRACTOR SHALL FOLLOW WHEN THIS SILTSTONE FILL LAYER IS CONSTRUCTED.

DEWATERING SYSTEMS

ANY DEWATERING SYSTEM, IF REQUIRED NEAR THE 12'-8" X 8'-1" SPPA SHALL BE DESIGNED TO ENSURE FINE GRAINED MATERIALS ARE NOT REMOVED FROM THE SURROUNDING SOIL IN THE VICINITY OF THE LEVEE.

WV STATE RAIL AUTHORITY

THE CONTRACTOR IS REQUIRED TO SUBMIT A PROPOSED CONSTRUCTION SEQUENCE DETAILS TO WV STATE RAIL AUTHORITY ATTENTION WILLIAM HARTMAN (304-289-3521). ALL SUBMISSIONS ARE TO BE MADE IN EXCESS OF THIRTY DAYS (30) OF THE COMMENCEMENT OF WORK.

Public Roads Div.	State Dist. No.	State Project No.	Federal Project No.	Fiscal Year	County	Sheet No.	Total Sheets
WV	5	X316 - H - 100.40 06	APD 0484 (251)C	2003	HARDY	16	670

PAVING QUANTITIES

ITEM NUMBER		402001-011 SKID (Type 9.5)		401001-011 BASE (Type 19)		401001-011 BASE (Type 37.5)		602001-012	408002-001	311006-001	207034-000	207002-000	307001-000	307001-000	
STATION	STATION	PRINCIPLE TON	ALTERNATE TON	PRINCIPLE TON	ALTERNATE TON	PRINCIPLE TON	ALTERNATE TON	12" App Slab SY	Bit. Material GA	4" F.D.B. (CY)	FABRIC SY	SUBGRADE CY	Agg. B. C. CL 1 (CY)	Agg. B. C. CL 10 (CY)	REMARKS
1731+00.00	1779+00.00	3344	3043	5573	5072	20241	18419			4702	46933.3	7052.4		356	MAINLINE
1779+00.00	1780+00.23	70	64	116	106	423	385			98	980.0	147.3		7	MAINLINE
1780+00.23	1780+20.23	20	18					188.0	56.0	21	188.0				APPROACH SLAB
1780+20.23	1781+23.77														BRIDGE # 10444
1781+23.77	1781+45.58	20	18					188.0	56.0	21	188.0				APPROACH SLAB
1781+45.58	1782+50.00	73	66	121	110	440	401			102	1021.0	153.4		8	MAINLINE
107+99.93	110+61.29	85	77	142	129	511	465			115	1031.9	172.0			RAMP1
110+61.29	120+69.17	236	214	393	357	1451	1320			334	3677.6	501.0		47	RAMP 1
200+00.00	210+76.91	252	229	420	382	1550	1411			357	3929.5	535.3		50	RAMP 2
210+76.91	223+19.49	109	99	182	165	654	595			147	1321.4	220.2			RAMP 2
300+00.00	319+53.55	457	416	761	693	2812	2559			647	7128.3	971.0		90	RAMP 3
319+53.55	325+03.28	109	99	181	165	653	594			147	1319.1	219.9			RAMP 3
410+99.70	412+63.15	35	32	58	53	209	190			47	4222.6	70.4			RAMP 4
412+63.15	423+60.90	257	234	428	389	1580	1438			364	4005.6	545.6		51	RAMP 4
709+53.55	717+50.16	326	296	543	494	1955	1779			439	5133.3	658.1		59	US 220
717+50.16	717+74.83	15	14	25	23	89	81			20	234.7	30.1		2	US 220
717+74.83	734+25.00	773	703	1288	1172	4638	4220			1041	12179.7	1561.5		122	US 220
800+50.00	801+85.66	98	89	163	148	592	539			134	1382.0	201.0		10	220 RAMP CONNECTOR
801+85.66	815+00.00	1112	1012	1853	1687	6720	6116			1519	15888.3	2279.1		97	220 RAMP CONNECTOR
815+00.00	816+71.34	358	325	596	542	2152	1958			484	4649.0	726.7		13	220 RAMP CONNECTOR
816+71.34	816+91.32	23	21					207.0	63.0	23	207.0				APPROACH SLAB
816+91.32	823+09.34														BRIDGE # 10445
823+09.34	823+29.42	23	21					207.0	63.0	23	207.0				APPROACH SLAB
823+29.42	823+53.00	260	237	434	394	1561	1421			351	3196.0	526.0		2	220 RAMP CONNECTOR
823+53.00	835+63.19	905	824	1509	1373	5433	4944			1219	12723.0	1829.2		80	220 RAMP CONNECTOR
2284+91.25	2293+55.64	679	618	1132	1030	4076	3709			915	9097.8	1372.2		64	220 RAMP CONNECTOR
2293+55.64	2295+27.64	114	104	190	173	683	621			153	1524.3	229.9		13	220 RAMP CONNECTOR
2295+27.64	2295+47.64	21	19					206.5	41.3	23	200.0				APPROACH SLAB
2295+47.64	2296+76.64														BRIDGE # 10443
2296+76.64	2296+96.64	21	19					206.5	41.3	23	200.0				APPROACH SLAB
2296+96.64	2297+28.89	25	23	41	38	149	136			33	332.6	50.2		2	220 RAMP CONNECTOR
2297+28.89	2297+93.14	48	44	80	73	290	264			65	646.7	97.5		5	220 RAMP CONNECTOR
11+00.00	18+33.38										1719.1		357.9		ACCESS RD # 11
20+00.00	23+21.39	71	64	189	172						1285.6		206.3	37	ACCESS RD # 12
30+00.00	32+72.00										997.3		206.0		ACCESS RD # 13
32+72.00	32+92.00	4	4	12	11						80.0		12.8	2	ACCESS RD # 13
40+88.00	42+00.00										498.7		100.0		ACCESS RD # 14
42+00.00	43+80.00										468.0		109.6		ACCESS RD # 14
43+80.00	51+51.93										1715.4		355.9		ACCESS RD # 14
49+53.22	52+65.00	70	64	188	171						1268.7		200.2	36	CAR WASH ROAD
721+25.00											143.6		24.6		Driveway # 1
723+00.00											256.8		44.0		Driveway # 2
725+77.00											167.1		28.6		Driveway # 3
715+40.00		14	13	23	21	83	75			19	217.8	30.9			Mc DONALDS ENTRANCE
717+05.00		10	9	16	15	59	53			13	154.3	22.7			CAR WASH ENTRANCE
725+90.00		12	11	20	19	73	67			16	192.3	31.2			North Entrance to Car Dealership
722+80.00		11	10	19	17	67	61			15	175.8	28.4			South Entrance to Car Dealership
1001+50.00	1030+00.00	611	556			2107	1917				10293.0		5181		US 220 DETOUR
1701+21.47	1701+11.95												1030		152 x 97 INCH CULVERT WINGWALL
10+00	14+25										1133.3		405		CONTRACTOR ACCESS ROAD
TOTAL		10,668	9,708	16,696	15,193	61,249	55,737	1,203	0,321	13,630	164,514	20,263	8,262	1,162	

Baker

Michael Baker Jr., Inc.

REVISION NUMBER	SHEET NUMBER	REVISION	DATE	BY

THE WEST VIRGINIA DEPARTMENT OF TRANSPORTATION
DIVISION OF HIGHWAYS

QUANTITY TABLES

L:\proj\CorridorH\Sect6\Contract 06\Finalbes\Const06\dvqtable01.qnt

04:30:14 PM

03/01/2004

Public Roads Div.	State Dist. No.	State Project No.	Federal Project No.	Fiscal Year	County	Sheet No.	Total Sheets
WV	5	X316 - H - 100.40 06	APD 0484 (251)C	2003	HARDY	17	670

GRADING SUMMARY

LOCATION STATION	LOCATION STATION	TOTAL EXCAVATION UNCLASS. C.Y.	* UNSUIT. EXCAVATION C.Y.	USABLE EXCAVATION C.Y.	SHRINK OR SWELL.	ADJUST. EXCAV. C.Y.	UNCLASS. EMBANK. C.Y.	SELECT EMBANK. C.Y.	SILT STONE EMBANK. C.Y.	TOTAL EMBANK. C.Y.	EXCESS(+) OR BORROW(-) C.Y.	REMARKS
1700+00	1782+50	668,778	41,122	627,656	1.04	652,762	565,056	0	107,693	672,749	-19,987	MAINLINE
2283+50	2296+00	294,270	0	294,270	1.04	306,041	0	0	0	0	306,041	US 220 RAMP CONNECTOR NORTH
800+50	835+00	51,781	36,866	14,915	1	14,915	447,512	0	95,107	542,619	-527,704	US 220 RAMP CONNECTOR
709+50	734+50	5,038	0	5,038	1	5,038	14,014	0	0	14,014	-8,976	US 220
110+00	120+00	12,350	8,035	4,315	1	4,315	91,778	0	21,119	112,897	-108,582	RAMP 1
200+50	212+50	231,297	0	231,297	1.04	240,549	0	0	0	0	240,549	RAMP 2
300+00	320+50	360,974	0	360,974	1.04	375,413	0	0	0	0	375,413	RAMP 3
410+50	423+80.90	24,384	8,450	15,934	1	15,934	105,155	0	21,387	126,542	-110,608	RAMP 4
11+00	18+00	2,270	2,270	0	1	0	3,801	0	5,313	8,914	-8,914	ACCESS ROAD 11
20+00	23+50	181	0	181	1	181	2,953	0	0	2,953	-2,772	ACCESS ROAD 12
30+00	33+50	47	0	47	1	47	17,609	0	0	17,609	-17,562	ACCESS ROAD 13
41+00	51+52	3,112	3,112	0	1	0	13,298	0	7,798	21,096	-21,096	ACCESS ROAD 14
50+00	52+00	79	0	79	1	79	43	0	0	43	36	CAR WASH ROAD
551+50	578+00	49,499	0	49,499	1	49,499	6,807	1,378	0	8,185	41,314	OVERFLOW CHANNEL
709+00	737+00	5,100	0	5,100	1	5,100	0	0	0	0	5,100	US 220 DETOUR
US 220 Pvmt Removal		7,500	0	7,500	1	7,500	0	0	0	0	7,500	US 220 EXISTING PAVEMENT REMOVAL
1725+00	1725+40							13,143				ABUTMENT 1 MAINLINE
1729+38	1729+76							8,572				ABUTMENT 2 MAINLINE
FORT RUN		0	0	0	1	0	0	665	0	665	-665	FORT RUN SLOPE PROTECTION
220 RMP CONN. BR		0	0	0	1	0	0	300	0	300	-300	220 RAMP CONNECTOR BRIDGE
10+00	14+25	124	0	124	1	124	204	0	0	204	-80	CONTRACTOR ACCESS ROAD
		1,716,784	99,855	1,616,929		1,677,497	1,268,030	24,058	258,417	1,526,790	148,707	

BORROW COMPUTATION

SELECT EMBANKMENT REQUIRED (FROM TABLE "GRADING SUMMARY")	=	24,058
SELECT EMBANKMENT AVAILABLE (FROM TABLE "PROBABLE SOURCE OF S.E.")	=	0
SELECT EMBANKMENT NEEDED	=	24,058
ROCK BORROW REQUIRED TO MEET S.E. REQUIRMENTS WITH 0% SWELL ITEM 211002-000, ROCK BORROW EXCAVATION = S.E. NEEDED 1+0.15	=	20,920
SILT STONE REQUIRED (FROM TABLE "GRADING SUMMARY")	=	258,417
SILT STONE AVAILABLE (FROM TABLE "PROBABLE SOURCE OF SILT STONE")	=	267,778
SILT STONE NEEDED	=	0

UNCLASS. EMBANKMENT REQUIRED (FROM TABLE "GRADING SUMMARY")	=	1,268,030
ADJUSTED EXCAVATION (FROM TABLE "GRADING SUMMARY") - "S.E. AVAILABLE" - "SILT STONE AVAILABLE"	=	1,409,719
EMBANKMENT NEEDED	=	0
EXCAVATION REQUIRED TO MEET EMBANK. REQUIRMENTS WITH 10% SHRINK ITEM 211001-000. UNCLASSIFIED BORROW EXCAVATION	=	0

* THIS MATERIAL SHALL BE STORED AND USED AS TOP SOIL AS SHOWN ON THE LANDSCAPING PLANS

*PROBABLE SOURCE OF SILT STONE MATERIAL

STATION	STATION	Approximate Average Thickness (FT)	Approximate Average Width (FT)	Estimated Silt Stone (CY)	REMARKS
1742+00	1750+00	20	145	85,926	US 48
1750+00	1754+00	20	120	35,556	US 48
1754+00	1762+00	20	110	65,185	US 48
203+00	209+00	15	80	26,667	RAMP 2
209+00	212+00	15	60	10,000	RAMP 2
310+00	315+00	15	90	25,000	RAMP 3
315+00	320+00	15	70	19,444	RAMP 3
TOTAL				267,778	

* FOR INFORMATION ONLY

MEDIAN

LOCATION STATION	LOCATION STATION	ITEM 610006-005 Type V Median, LF	REMARKS
1731+00.00	1782+50.00	5,150	MAINLINE
TOTAL		5,150	

GUARDRAIL

STATION	STATION	ITEM 607001-001 Type 1 G/R Class I LT	ITEM 607001-001 Type 1 G/R Class I RT	ITEM 607065-001 Flared End Terminal LT	ITEM 607065-001 Flared End Terminal RT	ITEM 607030-001 S.T.E.T. (EA) LT	ITEM 607030-001 S.T.E.T. (EA) RT	ITEM 607006-001 TH.Beam	*BUFFER END (EACH)	REMARKS
1779+28	1779+53	25.0				1		1		MAINLINE
1781+40	1781+77	37.5		1				1		MAINLINE
1779+67	1780+04		37.5		1			1		MAINLINE
1781+91	1782+54		62.5					1		MAINLINE
809+23	32+94		450.0		1				1	220 RAMP CONNECTOR
32+83	816+54		325.0					1	1	220 RAMP CONNECTOR
807+79	816+62	875.0				1		1		220 RAMP CONNECTOR
823+47	43+28	325.0		1				1		220 RAMP CONNECTOR
823+39	2284+86		1262.5					1	1	220 RAMP CONNECTOR
824+97	2287+05	1150.0		1		1				220 RAMP CONNECTOR
2294+87	119+81	137.5		1				1		220 RAMP CONNECTOR NORTH
2294+87	200+88		137.5				1	1		220 RAMP CONNECTOR NORTH
2297+48	422+77	75.0				1		1		220 RAMP CONNECTOR NORTH
2297+48	300+84		75.0		1			1		220 RAMP CONNECTOR NORTH
TOTAL		4,975		7		5		12	3	

* These will be paid under the Guardrail, Item 607001-001

SIDEWALK AND CURBING

LOCATION STATION	LOCATION STATION	ITEM 609001-001 Concrete Sidewalk SY	ITEM 609002-001 Bed Course Material CY	ITEM 610001-002 Concrete Curb Type II LF	ITEM 610005-001 Bituminous Curb Type I LF	REMARKS
800+55.24	802+69.37			444		US 220 Ramp Connector median
803+97.00	807+46.23			707		US 220 Ramp Connector median
808+78.05	812+96.37			850		US 220 Ramp Connector median
814+24.00	823+51.00			1857		US 220 Ramp Connector median
824+27.31	835+08.86			2172		US 220 Ramp Connector median
2288+54.90	2289+65.24			638		US 220 Ramp Connector North median
803+97.61	808+49.05	57.8	6.4			US 220 Ramp Connector median
808+78.66	811+85.74	62.8	7.0			US 220 Ramp Connector median
814+24.61	823+50.39	645.0	71.7			US 220 Ramp Connector median
828+54.74	835+08.24	77.7	8.5			US 220 Ramp Connector median
816+68.56	816+80.56				12	US 220 Ramp Connector Left
816+61.47	816+72.47				11	US 220 Ramp Connector Right
2295+05.39	2293+97.39				108	US 220 Ramp Connector North Left
2295+05.39	2293+97.39				108	US 220 Ramp Connector North Right
TOTAL		843.2	93.7	6,668	239	

Baker
Michael Baker Jr., Inc.

REVISION NUMBER	SHEET NUMBER	REVISION	DATE	BY

THE WEST VIRGINIA DEPARTMENT OF TRANSPORTATION
DIVISION OF HIGHWAYS

QUANTITY TABLES

L:\proj\Corridor H\Sect6\Contract 06\FinalDes\Const06\dvqtable02.qnt
04:15:15 PM
03/01/2004

Public Roads Div.	State Dist. No.	State Project No.	Federal Project No.	Fiscal Year	County	Sheet No.	Total Sheets
WV	5	X316 - H - 100.40 06	APD 0464 (251)C	2003	HARDY	18	670

RIGHT OF WAY MARKER QUANTITIES* (NOT IN CONTRACT)

STATION	LEFT(ft)	RIGHT(ft)	R/W MARKER (EA)	REMARKS
1700+97	66		1	MAINLINE
1700+85	179		1	MAINLINE
1702+44	254		1	MAINLINE
1704+56	216		1	MAINLINE
1706+81	213		1	MAINLINE
1708+82	189		1	MAINLINE
1724+17	193		1	MAINLINE
1725+04	237		1	MAINLINE
1725+16	673		1	MAINLINE
1725+44	76		1	MAINLINE
1725+46	149		1	MAINLINE
1725+61	681		1	MAINLINE
1725+84	76		1	MAINLINE
1725+88	202		1	MAINLINE
1725+99	621		1	MAINLINE
1728+85	244		1	MAINLINE
1728+86	205		1	MAINLINE
1732+44	210		1	MAINLINE
1735+11	257		1	MAINLINE
1734+89	366		1	MAINLINE
1739+64	460		1	MAINLINE
1739+70	314		1	MAINLINE
1741+49	295		1	MAINLINE
1747+50	299		1	MAINLINE
1757+84	253		1	MAINLINE
1770+96	100		1	MAINLINE
1773+99	132		1	MAINLINE
1779+61	118		1	MAINLINE
1779+68	267		1	MAINLINE
1784+10	111		1	MAINLINE
1701+13		70	1	MAINLINE
1701+25		169	1	MAINLINE
1707+64		158	1	MAINLINE
1709+43		172	1	MAINLINE
1724+06		172	1	MAINLINE
1725+37		172	1	MAINLINE
1725+40		75	1	MAINLINE
1725+80		75	1	MAINLINE
1725+77		151	1	MAINLINE
1729+57		165	1	MAINLINE
1735+35		185	1	MAINLINE
1749+50		348	1	MAINLINE
1750+20		543	1	MAINLINE
1755+05		524	1	MAINLINE
1755+15		350	1	MAINLINE
1759+91		237	1	MAINLINE
1767+47		177	1	MAINLINE
1771+36		98	1	MAINLINE
1771+86		240	1	MAINLINE
1774+47		254	1	MAINLINE
1775+24		305	1	MAINLINE
1775+71		238	1	MAINLINE
1775+74		109	1	MAINLINE
1780+53		124	1	MAINLINE
1780+43		203	1	MAINLINE
1785+06		390	1	MAINLINE
1786+45		355	1	MAINLINE
708+81	21		1	US 220
709+03	100		1	US 220
711+50	100		1	US 220
716+00	80		1	US 220
719+00	85		1	US 220
721+50	70		1	US 220
724+00	48		1	US 220
734+00	65		1	US 220
737+01	33		1	US 220
718+12		49	1	US 220
720+21		70	1	US 220
723+97		85	1	US 220
734+50		100	1	US 220
736+48		115	1	US 220
736+81		27	1	US 220
804+32	84		1	220 CONNECTOR
804+26	104		1	220 CONNECTOR

RIGHT OF WAY MARKER QUANTITIES* (NOT IN CONTRACT)

STATION	LEFT(ft)	RIGHT(ft)	R/W MARKER (EA)	REMARKS
809+32	128		1	220 CONNECTOR
816+34	173		1	220 CONNECTOR
817+56	71		1	220 CONNECTOR
817+96	71		1	220 CONNECTOR
822+52	159		1	220 CONNECTOR
823+90	268		1	220 CONNECTOR
826+22	239		1	220 CONNECTOR
806+78		204	1	220 CONNECTOR
808+88		145	1	220 CONNECTOR
813+25		159	1	220 CONNECTOR
814+49		210	1	220 CONNECTOR
814+65		159	1	220 CONNECTOR
817+33		171	1	220 CONNECTOR
817+43		71	1	220 CONNECTOR
817+83		71	1	220 CONNECTOR
817+38		446	1	220 CONNECTOR
817+87		465	1	220 CONNECTOR
818+27		766	1	220 CONNECTOR
819+00		956	1	220 CONNECTOR
820+31		1034	1	220 CONNECTOR
821+73		961	1	220 CONNECTOR
821+74		949	1	220 CONNECTOR
822+50		775	1	220 CONNECTOR
822+21		604	1	220 CONNECTOR
822+40		497	1	220 CONNECTOR
822+48		188	1	220 CONNECTOR
831+96		214	1	220 CONNECTOR
2273+87	212		1	MOOREFIELD BYPASS
2283+84	179		1	MOOREFIELD BYPASS
2288+56	118		1	MOOREFIELD BYPASS
2291+89	133		1	MOOREFIELD BYPASS
2271+87		268	1	MOOREFIELD BYPASS
2278+00		299	1	MOOREFIELD BYPASS
2278+20		258	1	MOOREFIELD BYPASS
2282+10		277	1	MOOREFIELD BYPASS
2282+15		255	1	MOOREFIELD BYPASS
2282+39		244	1	MOOREFIELD BYPASS
2289+55		201	1	MOOREFIELD BYPASS
2291+99		193	1	MOOREFIELD BYPASS
TOTAL			113	

* FOR INFORMATION ONLY

RIGHT OF WAY FENCE QUANTITIES

STATION	STATION	ITEM 608001-004, Chain Link		ITEM 608002-001, F.F.Fence		REMARKS
		LEFT	RIGHT	LEFT	RIGHT	
1701+30	1707+18			743	153	MAINLINE
1701+59	1707+51				603	MAINLINE
1708+94	1725+45			1654		MAINLINE
1709+19	1725+36				1618	MAINLINE
1729+72	1771+29			4458		MAINLINE
1730+20	2286+46				2075	MAINLINE
2285+55	2271+91				1919	MAINLINE
2271+91	1753+35		4149			MAINLINE
1753+35	1772+02				876	MAINLINE
1771+41	1779+73			905		MAINLINE
1772+13	1780+23				1019	MAINLINE
TOTAL		4,149		16,025		

*CLEARING AND GRUBBING

LOCATION				REMARKS
STATION	STATION	SF	ACRE	
1700+00	1782+50	1,720,670	39.50	MAINLINE
110+00	120+00	156,275	3.59	RAMP 1
200+50	212+50	225,900	5.19	RAMP 2
300+00	320+50	349,518	8.02	RAMP 3
410+50	423+60.90	188,102	4.32	RAMP 4
709+50	734+50	250,523	5.75	US 220
800+50	835+00	713,360	16.38	US 220 RAMP CONNECTOR
2284+00	2296+00	299,250	6.87	MOOREFIELD BYPASS
11+00	18+00	49,851	1.14	ACCESS RD 11
20+00	23+50	24,884	0.57	ACCESS RD 12
30+00	33+50	41,153	0.94	ACCESS RD 13
41+00	51+52	56,410	1.29	ACCESS RD 14
50+00	52+00	8,292	0.19	CAR WASH ROAD
551+50	578+00	775,482	17.80	OVERFLOW CHANNEL
		4,859,490	111.6	

* FOR INFORMATION ONLY

SEEDING AND MULCHING

LOCATION		Area	Area	652001-001 Agr. Lime	652002-001 Fertilizer 10-20-10	652003-001 Seed Mix B,C-1or C-2	652003-002 Seed Mix Type D	652004-001 Straw/ Hay Mulch	REMARKS
STATION	STATION	SF	Ac.	TN	TN	LB.	LB.	TN	
1700+00	1782+50	1,194,579	27.42	12.34	12.34	1070	1316	164.54	MAINLINE
110+00	120+00	136,660	3.14	1.41	1.41	306	94	18.82	RAMP 1
200+50	212+50	201,144	4.62	2.08	2.08	180	222	27.71	RAMP 2
300+00	320+50	314,324	7.22	3.25	3.25	563	260	43.30	RAMP 3
410+50	423+60.90	188,102	4.32	1.94	1.94	421	130	25.91	RAMP 4
709+50	734+50	117,556	2.70	1.21	1.21	526	0	16.19	US 220
800+50	835+00	500,002	11.48	5.17	5.17	224	820	68.87	US 220 RAMP CONNECTOR
2284+00	2296+00	211,479	4.85	2.18	2.18	95	262	29.13	US 220 RAMP CONNECTOR NORTH
11+00	18+00	39,633	0.91	0.41	0.41	177	0	5.46	ACCESS RD 11
20+00	23+50	13,219	0.30	0.14	0.14	30	9	1.82	ACCESS RD 12
30+00	33+50	28,084	0.64	0.29	0.29	0	39	3.87	ACCESS RD 13
41+00	51+52	38,873	0.89	0.40	0.40	104	21	5.35	ACCESS RD 14
50+00	52+00	444	0.01	0.00	0.00	2	0	0.06	CAR WASH ROAD
551+50	578+00	346,064	7.94	3.58	3.58	0	477	47.67	OVERFLOW CHANNEL
MEDIANS		16,474	0.38	0.17	0.17	37	0	2.27	220 CONNECTOR MEDIAN
2286+55	2289+65	5,609	0.13	0.06	0.06	13	0	0.77	220 CONNECTOR NORTH MEDIAN
TOTAL		3,352,266	76.96	35	35	3747	3449	462	

Baker
Michael Baker Jr., Inc.

REVISION NUMBER	SHEET NUMBER	REVISION	DATE	BY

THE WEST VIRGINIA DEPARTMENT OF TRANSPORTATION
DIVISION OF HIGHWAYS

QUANTITY TABLES

L:\proj\Corridor H\Sect6\Contract 05\FinalDes\Cont05\dvqtable03.qnt
04:09:50 PM
11/03/2003

Public Roads Div.	State Dist. No.	State Project No.	Federal Project No.	Fiscal Year	County	Sheet No.	Total Sheets
WV	5	X316 - H - 100.40 06	APD 0484 (251)C	2003	HARDY	19	670

DRAINAGE TABLE 1

LOCATION		2 ALTS 18" PIPE & END SECTIONS				3 ALTS. 18" PIPE & END SECTIONS						2 ALTS 18" PIPE & SAFETY END SECTIONS				2 ALTS 24" PIPE & END SECTIONS				3 ALTS 24" PIPE & END SECTIONS						2 ALTS 24" PIPE & SAFETY END SECTIONS				REMARKS
STATION	STATION	604076 016 C.S.P.,A2 LF	604009 016 C.S.P. EA	604025 016 ALUM.,A7 LF	604028 016 ALUM. EA	604076 016 C.S.P.,A2 LF	604009 016 C.S.P. EA	604025 016 ALUM.,A7 LF	604028 016 ALUM EA	604037 016 CON.CL II LF	604038 016 CONC. EA	604076 016 C.S.P.,A2 LF	604072 116 C.S.P. EA	604037 016 CON.CL II LF	604071 016 CONC. EA	604076 020 C.S.P.,A2 LF	604009 020 C.S.P. EA	604025 020 ALUM.,A7 LF	604028 020 ALUM. EA	604076 020 C.S.P.,A2 LF	604009 020 C.S.P. EA	604025 020 ALUM,A7 LF	604028 020 ALUM EA	604037 020 CON. CL II LF	604038 020 CONC. EA	604076 020 C.S.P.,A2 LF	604072 120 C.S.P. EA	604037 020 CON. CL II LF	604071 020 CONC. EA	
1701+21.47	1701+11.95																													WW22 TO WW23
1724+00.00	1724+00.00																													MES16 TO MES15
1740+50.00	1740+50.00															114		114												G15 TO G18
1740+50.00	1740+76.31															137		137												G18 TO 72" PIPE
1744+50.00	1744+50.00															223		223												G12 TO G13
1744+50.00	1744+50.00															113		113												G13 TO G14
1744+50.00	1744+64.04															42		42												G14 TO 72" PIPE
1752+15.01	1735+88.61																													WW20,WW21 & CAP
1773+50.00	1774+00.00																			38		38		38						WW30 TO RISER
1772+05.00	1771+37.50																													MES41 TO MES42
1774+50.00	1774+50.00																			143	2	143	2	143	2					MES50 TO MES51
120+00.00	120+00.00					86		86		86																				G86 TO CONN.
202+00.00	201+50.00															48		48												G54 TO G55
201+50.00	1744+50.00															101		101												G55 TO G12
207+50.00	207+64.56	85		85																										G10 TO CONN
212+00.00	210+07.83																			190		190		190						G71 TO G72
210+07.83	209+40.63																			64		64		64						G72 TO G9
209+40.63	208+50.00																													G9 TO G11
208+50.00	205+79.56																													G11 TO G20
205+79.56	205+52.13																													G20 TO 72" PIPE
208+73.43	209+40.63					66		66		66																				G9 TO G73
310+60.00	310+00.00																			121		121		121						G19 TO G22
310+00.00	209+40.63																													G22 TO G9
312+17.86	311+38.88					77		77		77																				G6 TO G8
311+38.88	310+60.00																			77		77		77						G8 TO G19
721+37.57	721+06.15											28	2	28	2															SES2 TO SES1
725+58.00	725+92.55																									35	2	35	2	SES3 TO SES4
711+00.00	714+50.00					348		348		348																				G82 to G83
714+50.00	716+50.00																			198		198		198						G83 TO G84
716+50.00	717+50.00																													G84 TO G85
717+50.00	717+50.00																													G85 TO G86
717+50.00	720+00.00																													G86 TO G67
720+00.00	723+06.00																													G67 TO G68
723+06.00	727+89.40																													G68 TO MH1
727+89.40	1701+55.00																													MH1 TO WW26
727+00.00	727+50.00					48		48		48																				G69 TO G70
727+50.00	727+89.40					37		37		37																				G70 TO MH1
732+00.00	730+50.00																									146	1	146	1	SES5 TO G100
730+50.00	14+50.00																			337		337		337						G100 TO RISER
14+50.00	12+08.46															271	1	271	1											RISER TO MES26
800+59.25	801+00.00					79		79		79																				B20 TO G101
801+00.00	718+21.56					64		64		64																				G101 TO B21
718+21.56	717+50.00					70		70		70																				B21 TO G65
804+06.29	804+00.00					7		7		7																				B1 TO B2
804+00.00	804+00.00					59	1	59	1	59	1																			B2 TO MES12
804+50.76	804+06.29					45		45		45																				B3 TO B1
806+73.47	806+73.47					67	1	67	1	67	1																			B4 TO MES13
807+00.00	806+73.47					26		26		26																				B5 TO B4
808+77.05	809+00.00	21		21																										B14 TO B13
809+00.00	809+00.00	90	1	90	1																									B13 TO MES40
812+76.00	812+76.00	109	1	109	1																									B6 TO MES14
816+00.00	816+00.00																													MES17 TO MES18
816+65.31	816+72.91															86		86												B7 TO B8
816+72.91	816+62.64															86	1	86	1											B8 TO MES31
2294+00.00	2294+00.00					83		83		83																				B10 TO B9
2294+00.00	119+08.30	117	1	117	1																									B9 TO MES32
2294+10.00	2294+00.00					10		10		10																				B11 TO B9
2294+10.00	2294+00.00					10		10		10																				B12 TO B10
23+25.53	23+22.53																			119	2	119	2	119	2					MES29 TO MES30
32+77.24	32+67.83															215	2	215	2											MES9 TO MES8
44+65.90	44+65.90																			31	1	31	1	31	1					G52 TO MES25
52+07.40	801+00.00					279		279		279																				G105 TO G101
417+00.00																														AT WW21
TOTAL		422	3	422	3	1,461	2	1,461	2	1,461	2	28	2	28	2	1,436	4	1,436	4	1,318	5	1,318	5	1,318	5	181	3	181	3	

CONTINUED ON DRAINAGE TABLE 2

L:\proj\Corridor H\Sect5\Contract 05\FinalDes\Const05\drqtable04.cpt

01/27/2004 02:35:29 PM

Baker
Michael Baker Jr., Inc.

REVISION NUMBER	SHEET NUMBER	REVISION	DATE	BY

THE WEST VIRGINIA DEPARTMENT OF TRANSPORTATION
DIVISION OF HIGHWAYS

QUANTITY TABLES

Public Roads Div.	State Dist. No.	State Project No.	Federal Project No.	Fiscal Year	County	Sheet No.	Total Sheets
WV	5	X316 - H - 100.40 06	APD 0484 (251)C	2003	HARDY	20	670

CONTINUED FROM DRAINAGE TABLE 1

DRAINAGE TABLE 2

LOCATION		2 ALTS. 30" PIPE		3 ALTS. 30" PIPE			2 ALTS. 36" PIPE		2 ALTS. 36" PIPE & END SECTION				2 ALTS. 42" PIPE		2 ALTS. 48" PIPE		66 X 51 INCH ARCH PIPE		152 X 97 INCH SPPA	2 ALTS. 72" PIPE		INLET TYPE B	INLET TYPE G	MAN HOLE TYPE A	WING WALLS		REMARKS
STATION	STATION	604025 022 ALUM.,B2 LF	604037 022 CON.CL II LF	604076 022 C.S.P.,A2 LF	604025 022 ALUM.,B2 LF	604037 022 CON.CL II LF	604025 024 ALUM.,B2 LF	604037 024 CON.CL II LF	604076 024 C.S.P.,A2 LF	604009 024 C.S.P. EA	604025 024 ALUM.,B2 LF	604028 024 ALUM EA	604025 026 ALUM.,B7 LF	604037 026 CON.CL II LF	604025 028 ALUM.,C7 LF	604037 028 CON.CL II LF	604012 057 C5 LF	604016 055 LF	604020 099 D6 LF	604076 036 C.S.P.,B3 LF	604025 036 ALUM.,D3 LF	605004 001 EA	605009 001 EA	605001 001 EA	CONC. C.S.P. C.Y.	* STEEL LBS.	
1701+21.47	1701+11.95																		88						34	2300	WW22 TO WW23
1724+00.00	1724+00.00								268	2	268	2															MES16 TO MES15
1740+50.00	1740+50.00																						1				G15 TO G18
1740+50.00	1740+78.31																						1				G18 TO 72" PIPE
1744+50.00	1744+50.00																						1				G12 TO G13
1744+50.00	1744+50.00																						1				G13 TO G14
1744+50.00	1744+64.04																						1				G14 TO 72" PIPE
1752+15.01	1735+88.61																			1755	1755				36.44	1944	WW20,WW21 & CAP
1773+50.00	1774+00.00																								1.02	52.4	WW30 TO RISER
1772+05.00	1771+37.50																160	2									MES41 TO MES42
1774+50.00	1774+50.00																										MES50 TO MES51
120+00.00	120+00.00																						1				G86 TO CONN.
202+00.00	201+50.00																						1				G54 TO G55
201+50.00	1744+50.00																						1				G55 TO G12
207+50.00	207+64.56																						1				G10 TO CONN
212+00.00	210+07.83																						1				G71 TO G72
210+07.83	209+40.63																						1				G72 TO G9
209+40.63	208+50.00								111		111												1				G9 TO G11
208+50.00	205+79.56								274		274												1				G11 TO G20
205+79.56	205+52.13								35		35												1				G20 TO 72" PIPE
208+73.43	209+40.63																						1				G9 TO G73
310+60.00	310+00.00																						1				G19 TO G22
310+00.00	209+40.63			175	175	175																	1				G22 TO G9
312+17.86	311+38.88																						1				G6 TO G8
311+38.88	310+60.00																						1				G8 TO G19
721+37.57	721+06.15																										SES2 TO SES1
725+58.00	725+92.55																										SES3 TO SES4
711+00.00	714+50.00																						1				G62 to G63
714+50.00	716+50.00																						1				G63 TO G64
716+50.00	717+50.00	98	98																				1				G64 TO G65
717+50.00	717+50.00	82	82																				1				G65 TO G66
717+50.00	720+00.00						246	246															1				G66 TO G67
720+00.00	723+06.00												296	296									1				G67 TO G68
723+06.00	727+89.40												473	473									1				G68 TO MH1
727+89.40	1701+55.00														625	625								1	3.97	262	MH1 TO WW26
727+00.00	727+50.00																						1				G69 TO G70
727+50.00	727+89.40																						1				G70 TO MH1
732+00.00	730+50.00																										SES5 TO G100
730+50.00	14+50.00																						1				G100 TO RISER
14+50.00	12+08.46																										RISER TO MES26
800+59.25	801+00.00																					1					B20 TO G101
801+00.00	718+21.56																						1				G101 TO B21
718+21.56	717+50.00																					1					B21 TO G65
804+06.29	804+00.00																					1					B1 TO B2
804+00.00	804+00.00																					1					B2 TO MES12
804+50.76	804+06.29																					1					B3 TO B1
806+73.47	806+73.47																					1					B4 TO MES13
807+00.00	806+73.47																					1					B5 TO B4
808+77.05	809+00.00																					1					B14 TO B13
809+00.00	809+00.00																					1					B13 TO MES40
812+76.00	812+76.00																					1					B6 TO MES14
816+00.00	816+00.00								252	2	252	2															MES17 TO MES18
816+65.31	816+72.91																					1					B7 TO B8
816+72.91	816+62.64																					1					B8 TO MES31
2294+00.00	2294+00.00																					1					B10 TO B9
2294+00.00	119+08.30																					1					B9 TO MES32
2294+10.00	2294+00.00																					1					B11 TO B9
2294+10.00	2294+00.00																					1					B12 TO B10
23+25.53	23+22.53																										MES29 TO MES30
32+77.24	32+67.83																										MES9 TO MES8
44+65.90	44+65.90																						1				G52 TO MES25
52+07.40	801+00.00																						1				G105 TO G101
417+00.00																									74		AT WW21
TOTAL		180	180	175	175	175	246	246	940	4	940	4	769	769	625	625	160	2	88	1,755	1,755	16	32	1	149	4,558	

* FOR INFORMATION ONLY

Baker
Michael Baker Jr., Inc.

REVISION NUMBER	SHEET NUMBER	REVISION	DATE	BY

THE WEST VIRGINIA DEPARTMENT OF TRANSPORTATION
DIVISION OF HIGHWAYS

QUANTITY TABLES

L:\proj\Corridor H\Sect6\Contract 06\FinalDes\Const06\dvqtable05.qnt

02:33:20 PM

01/27/2004

Public Roads Div.	State Dist. No.	State Project No.	Federal Project No.	Fiscal Year	County	Sheet No.	Total Sheets
WV	5	X316 - H - 100.40 06	APD 0484 (251)C	2003	HARDY	21	670

EROSION TABLE

LOCATION STATION	LOCATION STATION	LOCATION SIDE	ITEM NO 642001-001 TEMPORARY BERM LF.	ITEM NO 642002-001 SLOPE DRAIN LF	ITEM NO 642004-001 TEMPORARY SEEDING LB.	ITEM NO 642004-002 TYPE B SEEDING LB.	ITEM NO 642004-003 TYPE D SEEDING LB.	ITEM NO 642005-001 MULCHING TN	ITEM NO 642006-001 FERTILIZER TN	ITEM NO 642009-001 CONTOUR DITCH LF	ITEM NO 642010-001 AGRICULTURE LIMESTONE TN	ITEM NO 642011-001 HAY BALE EA	ITEM NO 642012-001 SILT FENCE LF	ITEM NO 642015-001 SUPER SILT FENCE	REMARKS
1702+00	1725+00	LT.			764.26	370.50	393.76	25.39	5.08		19.04				SEC_06 EAST
1702+00	1725+00	RT.			387.81		387.81	19.39	3.88		14.54				
1725+00	1743+00	LT.			591.66	384.15	207.51	16.29	3.26		12.21				WITH RAMP-4
1725+00	1743+00	RT.			658.13	471.90	186.23	16.57	3.31		12.43				WITH RAMP-1
1743+00	1771+00	LT.			969.77	663.00	306.77	25.54	5.11		19.15				WITH RAMP-3
1743+00	1771+00	RT.			885.57	468.00	417.57	28.08	5.62		21.06				WITH RAMP-2
1770+00	1782+50	LT.			104.07		104.07	5.20	1.04		3.90				
1770+00	1782+50	RT.			105.54		105.54	5.28	1.06		3.96				
106+00	119+25	RT.												1587	RAMP-1
800+50	834+05	RT.			509.64		509.64	25.48	5.10		19.11			1477	220 CONNECTOR
800+50	834+05	LT.			353.60		353.60	17.68	3.54		13.26				
102+00	120+00	RT.													RAMP-1
															US-220
710+00	716+00	RT.			12.38		12.38	0.62	0.12		0.46				
710+00	716+00	LT.			9.64		9.64	0.48	0.10		0.36				
716+00	727+50	RT.			29.53		29.53	1.48	0.30		1.11				
716+00	727+50	LT.			76.88		76.88	3.84	0.77		2.88				
731+00	734+00	RT.			7.81		7.81	0.39	0.08		0.29				
731+00	734+00	LT.			2.48		2.48	0.12	0.02		0.09				
10+00	16+00	LT.&RT.			214.50	214.50		3.30	0.66		2.48				ACC-11
20+00	23+22	LT.&RT.			97.50	97.50		1.50	0.30		1.13				ACC-12
30+00	33+00	LT.&RT.			58.50	58.50		0.90	0.18		0.68				ACC-13
40+00	51+50	LT.&RT.			306.00	234.00	72.00	7.20	1.44		5.40				ACC-14
2284+00	2293+50	RT.			124.44		124.44	6.22	1.24		4.67				MOREFIELD
2287+00	2293+50	LT.			41.81		41.81	2.09	0.42		1.57				
551+00	559+00				275.97		275.97	13.80	2.76		10.35				OVERFLOW CANNAL
561+50	570+00				292.15		292.15	14.61	2.92		10.96				& DITCH
200+00	1767+00	RT.			126.00		126.00	6.30	1.26		4.73				DITCH RT. R-2
1735+50	1740+00	LT			129.00		129.00	6.45	1.29		4.84				
1784+50	1786+00	RT.			12.00		12.00	0.60	0.12		0.45				
1773+50	1775+50	RT.			19.20		19.20	0.96	0.19		0.72				
1702+00	1707+50	LT.	825	37.4											
1709+50	1725+00	LT.	2325	117.8											
1730+50	1733+00	LT.	375	16											
1772+00	1775+00	LT.	450	3											
1780+50	1786+50	LT.	900	8.4											
807+00	817+00	LT.&RT.	1500	38											
823+00	824+00	LT.&RT.	150	7											
624+00	635+00	LT.&RT.	1650	88											
11+50	13+00	LT.	225	1.5											ACC_11
31+00	33+00	LT.	300	6											AC_13
40+00	44+00	LT.	600	27.2											ACC_14
1735+50	1740+00	LT.													
1784+50	1786+00	RT.													
1773+50	1775+50	RT.													
13+00	17+00	RT.													
1703+50	1707+00	LR													US-35
1735+00	1740+50	LT.													
1735+50	1740+50	RT.													
1741+00	1755+00	LT.													
1755+00	1771+00	LT.													
1741+00	1752+00	RT.													
1756+50	1771+50	RT.													
1760+50	1767+00	RT.													TOP OF CUT SLOPE
1753+50	1760+50	MED.													
201+50	206+50	RT.													
2285+00	2293+50	RT.													MOOREFIELD
2287+00	2293+00	LT.													
300+00	316+00	LT.													RAMP-3
316+00	325+50	RT.													
200+50	212+70	RT.													RAMP-2
212+70	223+00	RT.													
200+50	205+00	LT.													
716+00	728+00	LT.													US-220
1735+50		LT.													DAM #4E
1774+00		RT.													POND # 5
13+00		RT.													POND # 6E
1731+00	1779+00														MAINLINE
TOTAL			9300	350	7166	2962	4204	258	51	17200	192	1433	2400.00	3064	

CONTINUED ON SHEET 22

Baker
Michael Baker Jr., Inc.

REVISION NUMBER	SHEET NUMBER	REVISION	DATE	BY

THE WEST VIRGINIA DEPARTMENT OF TRANSPORTATION
DIVISION OF HIGHWAYS

QUANTITY TABLES

L:\proj\Corridor H\Sec16\Contract 06\FinalDes\Const06\dvqtable06.qnt
03:11:47 PM
09/15/2003

Public Route Div.	State Rout. No.	State Project No.	Federal Project No.	Fiscal Year	County	Sheet No.	Total Sheets
WV	5	X316 - H - 100.40 06	APD 0484 (251)C	2003	HARDY	22	670

EROSION TABLE

CONTINUED FROM SHEET 21

LOCATION STATION	LOCATION STATION	LOCATION SIDE	ITEM NO 642031-001 DITCH CHECK EA	ITEM NO 642033-001 SEDIMENT TRAP CY	ITEM NO 642042-001 FLOC BLOCK EA	ITEM NO 642043-001 P. DITCH CHECK EA	REMARKS
1702+00	1725+00	LT.					SEC_06 EAST
1702+00	1725+00	RT.					
1725+00	1743+00	LT.					WITH RAMP-4
1725+00	1743+00	RT.					WITH RAMP-1
1743+00	1771+00	LT.					WITH RAMP-3
1743+00	1771+00	RT.					WITH RAMP-2
1770+00	1782+50	LT.					
1770+00	1782+50	RT.					
106+00	119+25	RT.					RAMP-1
800+50	834+05	RT.					220 CONNECTOR
800+50	834+05	LT.					
102+00	120+00	RT.					RAMP-1
710+00	716+00	RT.					US-220
710+00	716+00	LT.					
716+00	727+50	RT.					
716+00	727+50	LT.					
731+00	734+00	RT.					
731+00	734+00	LT.					
10+00	16+00	LT.&RT.					ACC-11
20+00	23+22	LT.&RT.					ACC-12
30+00	33+00	LT.&RT.					ACC-13
40+00	51+50	LT.&RT.					ACC-14
2284+00	2293+50	RT.					MOREFIELD
2287+00	2293+50	LT.					
551+00	559+00						OVERFLOW CANNAL
561+50	570+00						& DITCH
200+00	1787+00	RT.					DITCH RT R-2
1735+50	1740+00	LT					
1784+50	1786+00	RT.					
1773+50	1775+50	RT.					
1702+00	1707+50	LT.					
1709+50	1725+00	LT.					
1730+50	1733+00	LT.					
1772+00	1775+00	LT.					
1780+50	1786+50	LT.					
807+00	817+00	LT.&RT.					
823+00	824+00	LT.&RT.					
824+00	835+00	LT.&RT.					
11+50	13+00	LT.					ACC. 11
31+00	33+00	LT.					AC. 13
40+00	44+00	LT.					ACC. 14
1735+50	1740+00	LT.					
1784+50	1786+00	RT.					
1773+50	1775+50	RT.					
13+00	17+00	RT.					
1703+50	1707+00	LR	1				US-35
1735+00	1740+50	LT.	2				
1735+50	1740+50	RT.	2				
1741+00	1755+00	LT.	5				
1755+00	1771+00	LT.	32				
1741+00	1752+00	RT.	4				
1756+50	1771+50	RT.	30				
1760+50	1767+00	RT.	3				TOP OF CUT SLOPE
1753+50	1760+50	MED.	2				
201+50	206+50	RT.	1				
2285+00	2293+50	RT.	17				MOORFIELD
2287+00	2293+00	LT.	12				
300+00	316+00	LT.	21				RAMP-3
316+00	325+50	RT.	19				
200+50	212+70	RT.	16				RAMP-2
212+70	223+00	RT.	21				
200+50	205+00	LT.	6				
716+00	728+00	LT.	3				US-220
1735+50		LT.			3		DAM #4E
1774+00		RT.			3		POND # 5
13+00		RT.			3		POND # 6E
1731+00	1779+00					12	MAINLINE
TOTAL			197	1600	9	12	

Baker
Michael Baker Jr., Inc.

REVISION NUMBER	SHEET NUMBER	REVISION	DATE	BY

THE WEST VIRGINIA DEPARTMENT OF TRANSPORTATION
DIVISION OF HIGHWAYS

QUANTITY TABLES

L:\proj\Corridor H\Sect6\Contract 06\FinalBas\Const06\drqtable07.qnt
02:35:13 PM
09/03/2003

Public Roads Div.	State Dist. No.	State Project No.	Federal Project No.	Fiscal Year	County	Sheet No.	Total Sheets
WV	5	X316 - H - 100.40 06	APD 0484 (251)C	2003	HARDY	23	670

DUMPED ROCK GUTTER AND MATTING

LOCATION		SIDE	633003-001 DUMPED ROCK GUTTER	655001-001 MATTING	655002-001 PERM. MATTING SY		REMARKS
STATION	STATION		CY	SY	TYPE A	TYPE B	
1734+00	1734+50	RT.		101.4			MAINLINE
1734+50	1735+50	RT.		247.2			MAINLINE
1735+50	1737+00	RT.		719.4			MAINLINE
1742+50	1742+00	RT.		123.6			MAINLINE
1748+00	1744+50	RT.		640.8			MAINLINE
1750+50	1749+00	RT.		274.6			MAINLINE
1754+00	1751+78	RT.		450.1			MAINLINE
1770+50	1764+00	RT.		1190.1			MAINLINE
1775+07	1779+00	RT.		394.2			MAINLINE
1729+06	1735+14	LT.			1377.8		MAINLINE
1733+50	1734+50	LT.		170.1			MAINLINE
1743+00	1740+50	LT.		516.2			MAINLINE
1750+00	1748+50	LT.		321.8			MAINLINE
1748+50	1744+50	LT.		794.1			MAINLINE
1762+94	1760+00	LT.		397.4			MAINLINE
1760+00	1753+45	LT.		2128.6			MAINLINE
1771+42		LT.			51.3		AT WW19
1772+00	1778+00	LT.		598.0			MAINLINE
200+50	207+50	RT.		1281.6			RAMP 2
208+00	209+40	RT.		258.3			RAMP 2
212+00	209+40	RT.		476.0			RAMP 2
220+69	212+00	RT.			1591.1		RAMP 2
201+00	207+97	LT.		1276.1			RAMP 2
302+00	310+58	LT.		1570.9			RAMP 3
324+50	312+00	LT.		2288.6			RAMP 3
2285+50	2291+50	RT.		1055.2			220 RAMP CONNECTOR NORTH
2291+50	2292+50	RT.		183.1			220 RAMP CONNECTOR NORTH
2287+00	2292+50	LT.		1007.0			220 RAMP CONNECTOR NORTH
2294+19	2295+29	LT.			93.3		AT MES32
808+50	809+00	LT.		91.5			220 RAMP CONNECTOR
814+64	815+14	LT.		91.5			220 RAMP CONNECTOR
50+50	50+00	RT.		56.8			ACCESS RD.14
47+50	44+67	RT.		412.7			ACCESS RD.14
41+50	44+67	RT.		801.4			ACCESS RD.14
720+00	722+00	LT.		363.8			US 220
723+00	725+00	LT.		363.8			US 220
1973+34	1978+45	RT.		648.4			RAIL ROAD
205+50	202+00	RT.		428.3			TOP OF CUT SLOPE
1767+00	1754+50	RT.		1803.2			TOP OF CUT SLOPE
1754+50	1754+00	RT.			70.6		TOP OF CUT SLOPE
1702+00		LT.	7.0				MAINLINE
1709+50		LT.	9.0				MAINLINE
1775+00		RT.	19.0				MAINLINE
812+76		LT.	4.0				220 RAMP CONNECTOR
TOTALS			39	23,524	3,184	0	

SEDIMENT BASIN SUMMARY

LOCATION				207001-001	207034-000	211001-000	211008-000	211017-001	604001-020	642035-001	642036-001	(NOTE 2)	(NOTE 3)				REMARKS
STATION	SIDE	BASIN NO.	BASIN TYPE	UNC EXC	FABRIC FOR SEPARATION	UNC BORROW EXC (NOTE 1)	ROCK BORROW EXC	IMPERVIOUS CORE	24 INCH C.S.P.,A2	RISER	SEDIMENT REMOVAL	CLEAR/ GRUBB	SEED MIX	MULCH	FERTILIZER	AGR. LIMESTONE	
				CY	SY	CY	TN	SF	LF	EACH	CY	ACRE	LB.	TN	TN	TN	
1735+50	LT.	D-4E	DAM	2462	2340	8062	5078	6400		1	3981	2	390	8.00	1.20	4.50	DAM #4E
1774+00	RT.	P-5	POND	240	70	119	99		110	1	270	0	62	1.28	0.19	0.72	POND # 5
13+00	RT.	P-4	POND							1	200						POND # 4
TOTAL				2702	2410	8181	5177	6400	110	3	4451	2	452	9.28	1.39	5.22	

NOTE 1 :- UNCLASSIFIED BORROW EXCAVATION QUANTITY CALCULATED FOR EACH BASIN ON THE TOTAL REQUIRED EXCAVATION FOR EACH BASIN.
NOTE 2 :- COST AND QUANTITY INCLUDED IN THE UNIT PRICE BID FOR ITEM 201001, CLEARING AND GRUBBING, PER LS - QUANTITY FOR INFORMATION ONLY.
NOTE 3 :- COST TO BE INCLUDED IN UNIT BID PRICE FOR ITEM 207001, UNCLASSIFIED EXCAVATION, PER CY. MATERIAL CERTIFICATION REQUIREMENTS FOR THESE ITEMS SHALL BE WAIVED. QUANTITIES FOR INFORMATION ONLY.

Baker
Michael Baker Jr., Inc.

REVISION NUMBER	SHEET NUMBER	REVISION	DATE	BY

THE WEST VIRGINIA DEPARTMENT OF TRANSPORTATION
DIVISION OF HIGHWAYS

QUANTITY TABLES

L:\proj\Corridorh\Sect5\Contract 06\FinalDes\Const06\dvqtable06.qmt
02:35:36 PM
09/03/2003

Public Roads Div.	State Dist. No.	State Project No.	Federal Project No.	Fiscal Year	County	Sheet No.	Total Sheets
WV	5	X316 - H - 100.40 06	APD 0484 (251)C	2003	HARDY	24	670

FREE DRAINING BASE
TRENCH, UNDERDRAIN AND PIPE QUANTITIES

LOCATION	ITEM NUMBER		606029-001				606030-001		SLOPEWALLS	REMARKS
			FREE DRAINING BASE TRENCH				6" OUTLET PIPE		FOR INFO.	
	STATION	STATION	LT (FT)	MED. LT	MED. RT	RT (FT)	LT (FT)	RT (FT)	ONLY (EA.)	
US 48	1731+00.00	1740+67.50	967.50			967.50	314.00	321.00	5	
	1740+67.50	1782+50.00	4182.50			4182.50	840.00	636.00	10	
	1741+68.77		49.00			48.50	92.00			GRADING TRANSITION
RAMP 1	110+81.29	112+35.64	174.35					32.00	2	
	112+35.64	116+59.27	423.63					32.00	2	
	116+59.27	120+18.76				359.49	127.00		1	
	120+24.94		25.50			45.00		15.00		GRADING TRANSITION
RAMP 2	200+40.67	204+09.90	369.23				25.00			
	204+09.90	209+40.63				530.73		109.00		
	209+40.63	210+76.91				136.28		10.00		
RAMP 3	300+40.35	302+41.98				201.63		35.00	1	
	302+41.98	311+38.88	896.90				52.00	162.00	3	
	311+38.88	319+53.55	814.67				241.00			
RAMP 4	412+63.15	413+07.97	44.82				32.00		2	
	413+07.97	418+08.98	501.01				32.00		2	
	418+08.98	423+20.56				511.58		63.00	2	
	422+24.21		8.50			26.50		35.00	1	GRADING TRANSITION
US 220 RAMP CONNECTOR NORTH	2284+91.25	2293+06.73	803.96			815.48	94.00	359.00	3	
	2293+06.73	2295+27.64	220.91			220.91	66.00	127.00		
	2296+96.64	2297+86.23	89.59			89.59				
US 220 RAMP CONNECTOR	800+25.83	803+07.90	322.38			290.74	46.00	19.00		
	803+07.90	803+94.44	86.54		86.54	86.54	100.00	73.00		
	803+94.44	813+35.29	940.85		940.85	940.85	136.00	163.00	5	DRAIN TO INLET "G105"
	813+35.25	816+96.02	360.77			353.24	16.00	16.00	2	
	823+29.17	835+00.32	1171.15			1174.82	102.00	96.00	12	
US 220	709+50.00	709+98.71	48.71			48.71	32.00			
	709+98.71	711+23.14				124.43		15.00		
	711+23.14	716+79.13				555.99		6.00		
	716+79.13	718+00.00	120.87			120.87	44.00	3.00		
	718+00.00	718+45.29	45.29			9.24	12.00			
	718+45.29	733+80.00	1534.71				135.00			
	733+80.00	734+50.00	70.00			70.00				
GRAND TOTAL			27,212				4,865		53	

* BUILDING DEMOLITION & ASBESTOS ABATEMENT

STRUCTURE NO.	TYPE OF IMPROVEMENT	LOCATION		ITEM 202001-000 BUILDING DEMOLITION	ITEM 681001-001 ASBESTOS ABATEMENT	ITEM 202002-000 WATER WELL ABANDONMENT	ITEM:202003-000 SEPTIC TANK ABANDONMENT	ROADWAY
		STATION	OFFSET					
BLD 35-1/1	BP STATION BLOCK BUILDING	718+27	78' LT	35-1/1				US 220
BLD 35-1/2	WOOD OUTBUILDING	718+60	129' LT	35-1/2				US 220
BLD 35-2/1	BLOCK BUILDING FLEA MARKET	723+28	83' RT	35-2/1				US 220
BLD 36-1/1	NAPA AUTO BLOCK BUILDING	719+30	100' LT	36-1/1				US 220
BLD 41-1/1	2 STORY FRAME HOUSE	1715+40	178' RT	41-1/1				MAINLINE
BLD 41-1/2	COLLAPSED 1 STORY FRAME	1716+24	155' RT	41-1/2				MAINLINE
BLD 41-1/3	OUT HOUSE	1716+10	134' RT	41-1/3				MAINLINE
BLD 41-A/1	BILLBOARD	731+76	46' RT	41-A/1				US 220
SEP 35-1/3	SEPTIC TANK	718+48	133' LT				35-1/3	US 220
WAT 35-1/4	WATER WELL	718+59	110' LT			35-1/4		US 220

* AT THE TIME OF THE LETTING, NOT ALL ASBESTOS REPORTS HAVE BEEN RECEIVED.

BUILDING DEMOLITION CANNOT PROCEED UNTIL AN ASBESTOS REPORT HAS BEEN COMPLETED.

Baker
Michael Baker Jr., Inc.

REVISION NUMBER	SHEET NUMBER	REVISION	DATE	BY

THE WEST VIRGINIA DEPARTMENT OF TRANSPORTATION
DIVISION OF HIGHWAYS

QUANTITY TABLES

L:\proj\Corridor H\Sect6\Contract 06\FinalDes\Const06\dvqtable09.QNT
02:35:56 PM
09/03/2003

Public Roads Div.	State Dist. No.	State Project No.	Federal Project No.	Fiscal Year	County	Sheet No.	Total Sheets
WV	5	X316 - H - 100.40 06	APD 0484 (251)C	2003	HARDY	25	670

SHEET VOIDED

L:\proj\CorridorH\Sect6\Contract 06\FinalDes\Const06\Design_Criteria_06.dgn

03:08:45 PM

09/04/2003

Baker

Michael Baker Jr., Inc.

REVISION NUMBER	SHEET NUMBER	REVISION	DATE	BY

THE WEST VIRGINIA DEPARTMENT OF TRANSPORTATION
DIVISION OF HIGHWAYS

DESIGN CRITERIA

Public Roads Div.	State Dist. No.	State Project No.	Federal Project No.	Fiscal Year	County	Sheet No.	Total Sheets
WV	5	X316 - H - 100.40 06	APD D484 (251)C	2003	HARDY	26	559

OFFSITE CONTROL

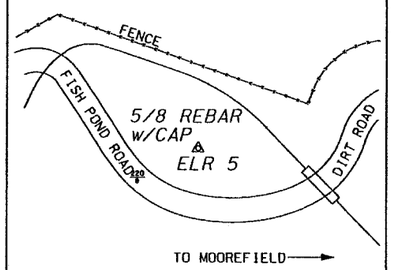

N=231213.88	E=2115095.55	EL.=1095.55

OFFSITE CONTROL

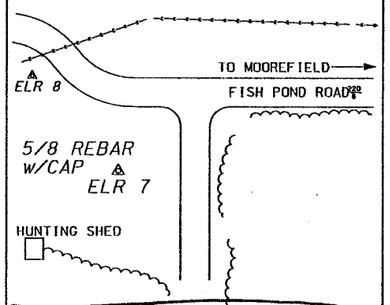

N=233876.99	E=2115095.79	EL.=1325.34

OFFSITE CONTROL

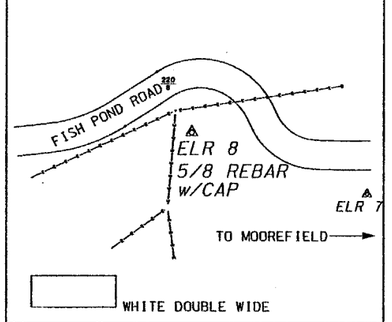

N=234401.27	E=2109568.33	EL.=1363.49

OFFSITE CONTROL

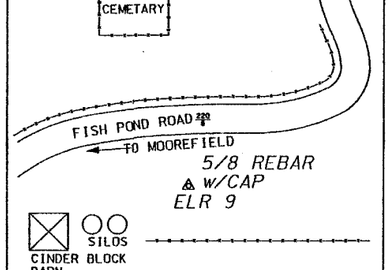

N=237697.19	E=2110925.61	EL.=1157.52

OFFSITE CONTROL

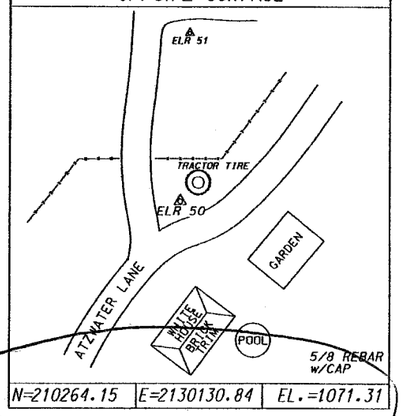

N=210264.15	E=2130130.84	EL.=1071.31

OFFSITE CONTROL

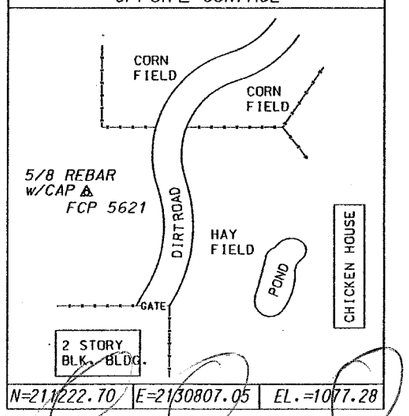

N=211222.70	E=2130807.05	EL.=1077.28

OFFSITE CONTROL

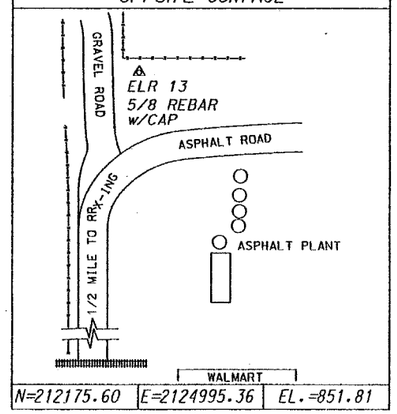

N=212175.60	E=2124995.36	EL.=851.81

OFFSITE CONTROL

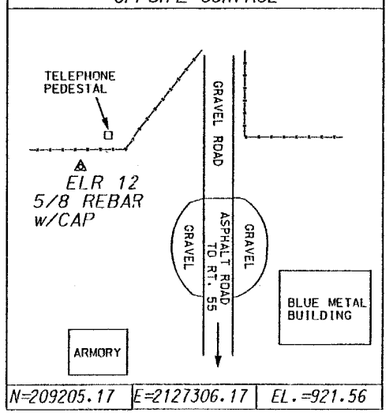

N=209205.17	E=2127306.17	EL.=921.56

OFFSITE CONTROL

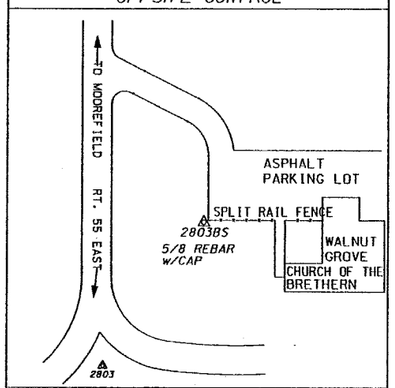

N=211859.71	E=2133893.01	EL.=1266.94

OFFSITE CONTROL

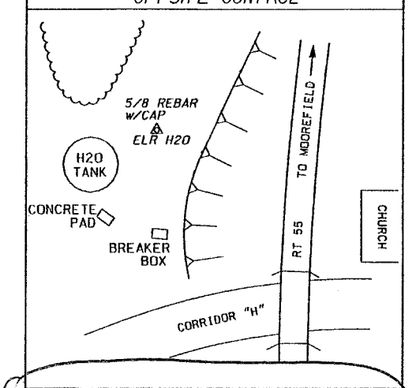

N=213496.64	E=2133342.42	EL.=1216.90

OFFSITE CONTROL

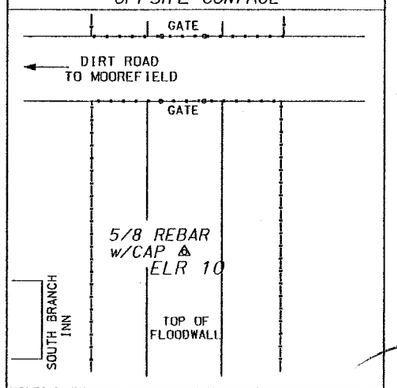

N=212360.31	E=2119919.50	EL.=801.95

OFFSITE CONTROL

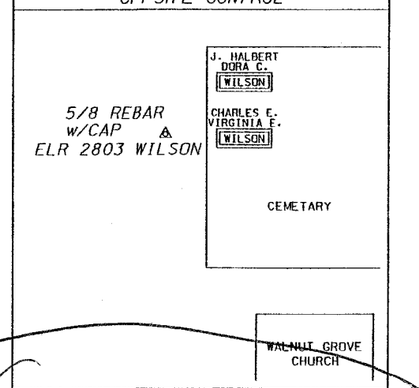

N=212627.37	E=2134770.56	EL.=1218.23

NOT TO SCALE

Baker
Michael Baker Jr., Inc.

REVISION NUMBER	SHEET NUMBER	REVISION	DATE	BY

THE WEST VIRGINIA DEPARTMENT OF TRANSPORTATION
DIVISION OF HIGHWAYS

REFERENCE & CONTROL POINTS

L:\proj\Corridorh\Sect8\Contract 06\FinalDes\Const06\dvrefptst.ref

11:03:56 AM

07/21/2003

Public Roads Div.	State Dist. No.	State Project No.	Federal Project No.	Fiscal Year	County	Sheet No.	Total Sheets
WV	5	X316 - H - 100.40 06	APD 0464 (251)C	2003	HARDY	27	670

CURVE H6-8

PI = 1665+79.85
Δ = 99° 52′ 00″ (LT)
D = 0° 42′ 58″
R = 8,000.00
L = 13,944.02
T = 9,511.53
SE = 2.40%

MAINLINE CURVE NO.8 DATA		
STATION	COORDINATES	
	NORTHING	EASTING
PI Sta 1665+79.85	213,385.7352	2,111,404.8329
PC Sta 1570+68.32	222,323.6507	2,114,657.9681
PT Sta 1710+12.34	211,712.2816	2,120,767.9934

CURVE AC11-1

PI = 11+49.62
Δ = 52° 47′ 06″ (LT)
D = 57° 17′ 45″
R = 100.00
L = 92.13
T = 49.62

ACCESS RD.11 CURVE NO.1 DATA		
STATION	COORDINATES	
	NORTHING	EASTING
PI Sta 11+49.62	212,001.7477	2,119,906.1776
PC Sta 11+00.00	212,026.1471	2,119,862.9665
PT Sta 11+92.13	212,021.4027	2,119,951.7432

CURVE AC11-2

PI = 12+81.21
Δ = 39° 13′ 30″ (RT)
D = 22° 55′ 06″
R = 250.00
L = 171.15
T = 89.08

ACCESS RD.11 CURVE NO.2 DATA		
STATION	COORDINATES	
	NORTHING	EASTING
PI Sta 12+81.21	212,056.6865	2,120,033.5401
PC Sta 11+92.13	212,021.4027	2,119,951.7432
PT Sta 13+63.28	212,032.2940	2,120,119.2179

CURVE AC11-3

PI = 16+85.23
Δ = 11° 25′ 41″ (LT)
D = 11° 27′ 33″
R = 500.00
L = 99.73
T = 50.03

ACCESS RD.11 CURVE NO.3 DATA		
STATION	COORDINATES	
	NORTHING	EASTING
PI Sta 16+85.23	211,944.1383	2,120,428.8619
PC Sta 16+35.20	211,957.8374	2,120,380.7443
PT Sta 17+34.92	211,940.2445	2,120,478.7398

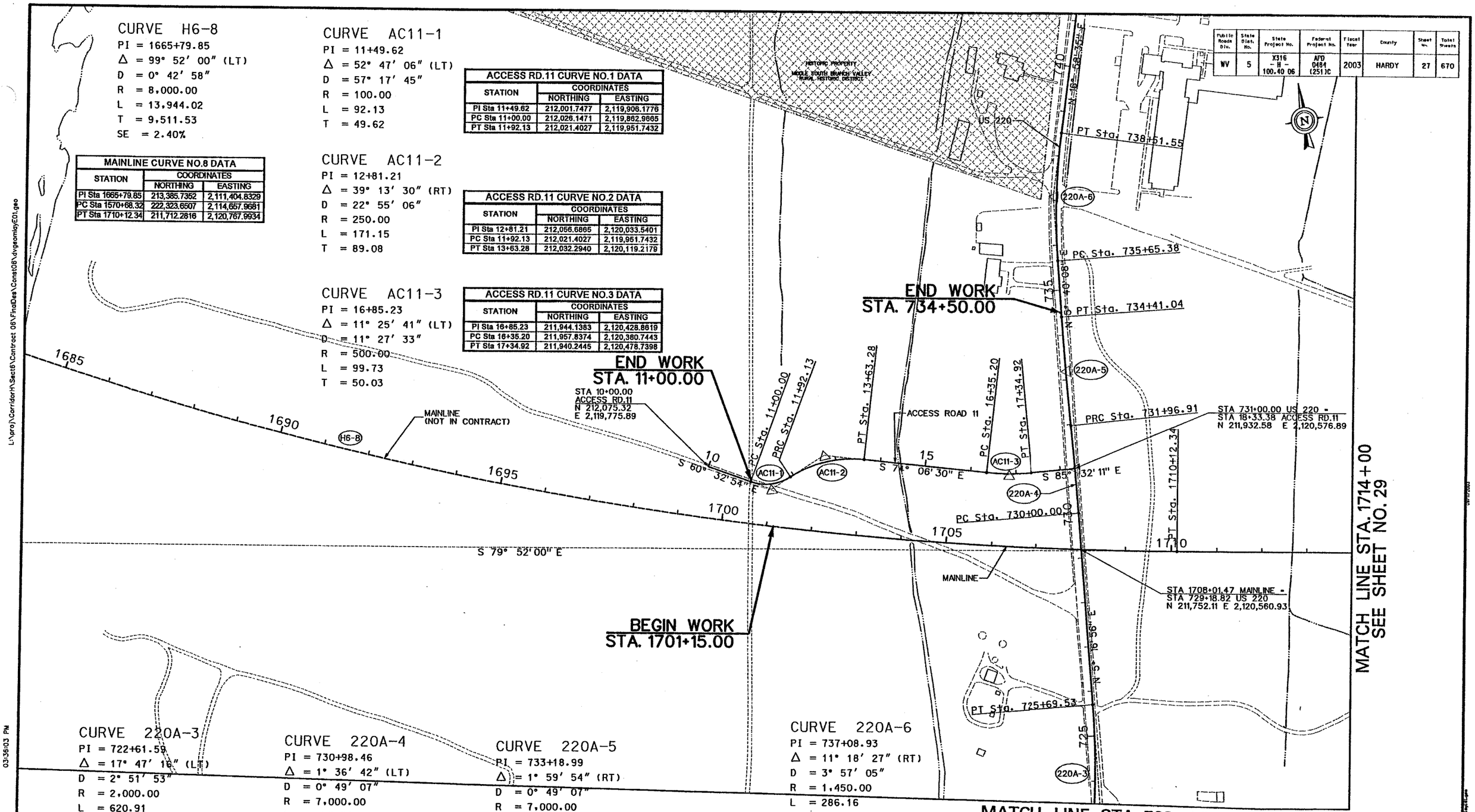

CURVE 220A-3

PI = 722+61.59
Δ = 17° 47′ 16″ (LT)
D = 2° 51′ 53″
R = 2,000.00
L = 620.91
T = 312.97
SE = 4.40%

US 220 CURVE NO.3 DATA		
STATION	COORDINATES	
	NORTHING	EASTING
PI Sta 722+61.59	211,092.6560	2,120,499.9549
PC Sta 719+48.62	210,804.7130	2,120,377.3150
PT Sta 725+69.53	211,404.2993	2,120,528.7679

CURVE 220A-4

PI = 730+98.46
Δ = 1° 36′ 42″ (LT)
D = 0° 49′ 07″
R = 7,000.00
L = 196.91
T = 98.46
SE = N.C.%

US 220 CURVE NO.4 DATA		
STATION	COORDINATES	
	NORTHING	EASTING
PI Sta 730+98.46	211,930.9863	2,120,577.4627
PC Sta 730+00.00	211,832.9446	2,120,568.3982
PT Sta 731+96.91	212,029.2442	2,120,583.7660

CURVE 220A-5

PI = 733+18.99
Δ = 1° 59′ 54″ (RT)
D = 0° 49′ 07″
R = 7,000.00
L = 244.14
T = 122.08
SE = N.C.%

US 220 CURVE NO.5 DATA		
STATION	COORDINATES	
	NORTHING	EASTING
PI Sta 733+18.99	212,151.0749	2,120,591.5816
PC Sta 731+96.91	212,029.2442	2,120,583.7660
PT Sta 734+41.04	212,272.5590	2,120,603.6406

CURVE 220A-6

PI = 737+08.93
Δ = 11° 18′ 27″ (RT)
D = 3° 57′ 05″
R = 1,450.00
L = 286.16
T = 143.55

US 220 CURVE NO.6 DATA		
STATION	COORDINATES	
	NORTHING	EASTING
PI Sta 737+08.93	212,539.1350	2,120,630.1021
PC Sta 735+65.38	212,396.2893	2,120,615.9226
PT Sta 738+51.55	212,676.4277	2,120,672.0148

SCALE : 0 100 ft.

Baker
Michael Baker Jr., Inc.

REVISION NUMBER	SHEET NUMBER	REVISION	DATE	BY

THE WEST VIRGINIA DEPARTMENT OF TRANSPORTATION
DIVISION OF HIGHWAYS

GEOMETRIC LAYOUT

L:\proj\Corridor H\Sect6\Contract 06\FinalDes\Const06\dvgeomlay01.geo
03:36:03 PM
09/11/2003

Public Roads Div.	State Dist. No.	State Project No.	Federal Project No.	Fiscal Year	County	Sheet No.	Total Sheets
WV	5	X316 - H - 100.40 06	APD 0484 (251)C	2003	HARDY	28	670

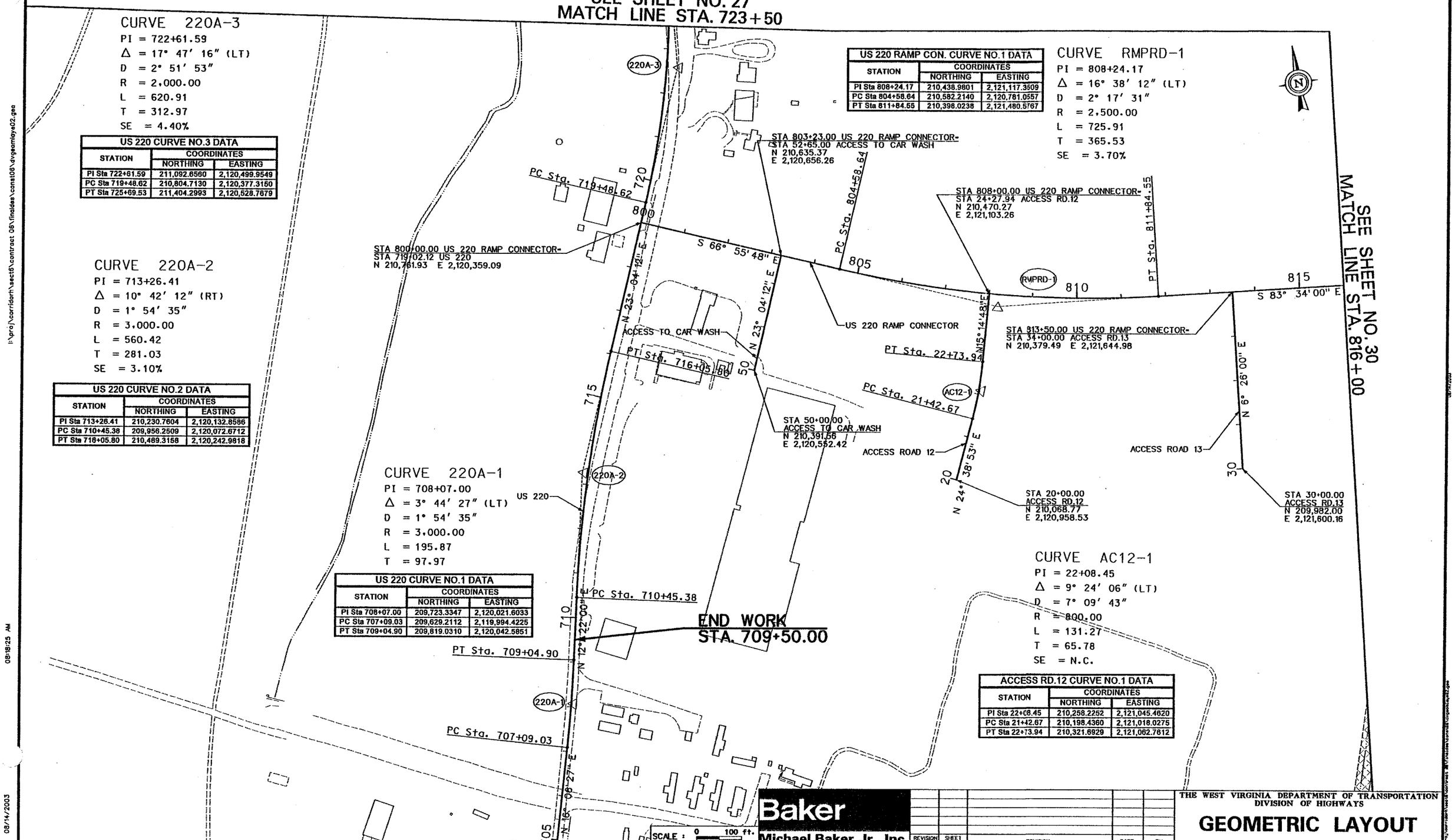

CURVE 220A-3
PI = 722+61.59
Δ = 17° 47′ 16″ (LT)
D = 2° 51′ 53″
R = 2,000.00
L = 620.91
T = 312.97
SE = 4.40%

US 220 CURVE NO.3 DATA		
STATION	COORDINATES	
	NORTHING	EASTING
PI Sta 722+61.59	211,092.6560	2,120,499.9549
PC Sta 719+48.62	210,804.7130	2,120,377.3150
PT Sta 725+69.53	211,404.2993	2,120,528.7679

CURVE 220A-2
PI = 713+26.41
Δ = 10° 42′ 12″ (RT)
D = 1° 54′ 35″
R = 3,000.00
L = 560.42
T = 281.03
SE = 3.10%

US 220 CURVE NO.2 DATA		
STATION	COORDINATES	
	NORTHING	EASTING
PI Sta 713+26.41	210,230.7604	2,120,132.8586
PC Sta 710+45.38	209,956.2509	2,120,072.6712
PT Sta 716+05.80	210,469.3158	2,120,242.9818

CURVE 220A-1
PI = 708+07.00
Δ = 3° 44′ 27″ (LT)
D = 1° 54′ 35″
R = 3,000.00
L = 195.87
T = 97.97

US 220 CURVE NO.1 DATA		
STATION	COORDINATES	
	NORTHING	EASTING
PI Sta 708+07.00	209,723.3347	2,120,021.6033
PC Sta 707+09.03	209,629.2112	2,119,994.4225
PT Sta 709+04.90	209,819.0310	2,120,042.5851

US 220 RAMP CON. CURVE NO.1 DATA		
STATION	COORDINATES	
	NORTHING	EASTING
PI Sta 808+24.17	210,438.9801	2,121,117.3509
PC Sta 804+58.64	210,582.2140	2,120,781.0557
PT Sta 811+84.55	210,398.0238	2,121,480.5767

CURVE RMPRD-1
PI = 808+24.17
Δ = 16° 38′ 12″ (LT)
D = 2° 17′ 31″
R = 2,500.00
L = 725.91
T = 365.53
SE = 3.70%

CURVE AC12-1
PI = 22+08.45
Δ = 9° 24′ 06″ (LT)
D = 7° 09′ 43″
R = 800.00
L = 131.27
T = 65.78
SE = N.C.

ACCESS RD.12 CURVE NO.1 DATA		
STATION	COORDINATES	
	NORTHING	EASTING
PI Sta 22+08.45	210,258.2252	2,121,045.4620
PC Sta 21+42.67	210,198.4360	2,121,018.0275
PT Sta 22+73.94	210,321.6929	2,121,062.7612

Baker
Michael Baker Jr., Inc.

REVISION NUMBER	SHEET NUMBER	REVISION	DATE	BY

THE WEST VIRGINIA DEPARTMENT OF TRANSPORTATION
DIVISION OF HIGHWAYS

GEOMETRIC LAYOUT

08/14/2003 08:18:25 AM

Public Roads Div.	State Dist. No.	State Project No.	Federal Project No.	Fiscal Year	County	Sheet No.	Total Sheets
WV	5	X316 - H - 100.40 06	APD 0484 (251)C	2003	HARDY	29	670

CURVE RMP4-1

PI = 412+61.00
Δ = 8° 51′ 15″ (LT)
D = 2° 17′ 31″
R = 2,500.00
L = 386.34
T = 193.55
SE = 4.30%

RAMP 4 CURVE NO.1 DATA		
STATION	COORDINATES	
	NORTHING	EASTING
PI Sta 412+61.00	211,370.0675	2,122,990.8652
PC Sta 410+67.44	211,400.3046	2,122,799.6868
PT Sta 414+53.78	211,369.6170	2,123,184.4195

CURVE RMP4-2

PI = 420+99.77
Δ = 10° 00′ 00″ (RT)
D = 1° 54′ 35″
R = 3,000.00
L = 523.60
T = 262.47
SE = R.C.

RAMP 4 CURVE NO.2 DATA		
STATION	COORDINATES	
	NORTHING	EASTING
PI Sta 420+99.77	211,368.1137	2,123,830.4058
PC Sta 418+37.30	211,368.7245	2,123,567.9405
PT Sta 423+60.90	211,321.9356	2,124,088.7776

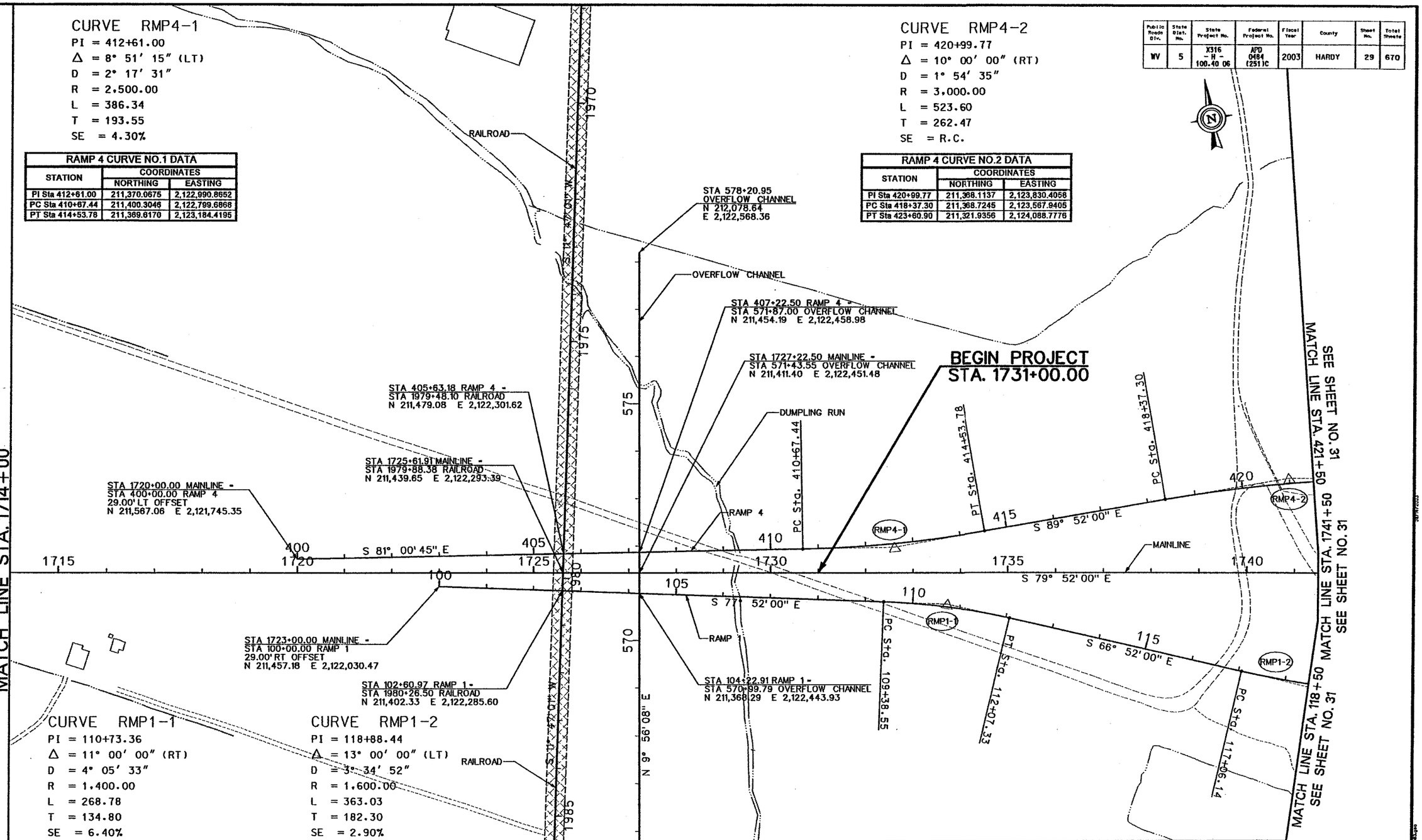

CURVE RMP1-1

PI = 110+73.36
Δ = 11° 00′ 00″ (RT)
D = 4° 05′ 33″
R = 1,400.00
L = 268.78
T = 134.80
SE = 6.40%

CURVE RMP1-2

PI = 118+88.44
Δ = 13° 00′ 00″ (LT)
D = 3° 34′ 52″
R = 1,600.00
L = 363.03
T = 182.30
SE = 2.90%

RAMP 1 CURVE NO.1 DATA		
STATION	COORDINATES	
	NORTHING	EASTING
PI Sta 110+73.36	211,231.5778	2,123,079.8438
PC Sta 109+38.55	211,259.9120	2,122,948.0505
PT Sta 112+07.33	211,178.6168	2,123,203.8093

RAMP 1 CURVE NO.2 DATA		
STATION	COORDINATES	
	NORTHING	EASTING
PI Sta 118+88.44	210,911.0284	2,123,830.1515
PC Sta 117+06.14	210,982.6478	2,123,662.5124
PT Sta 120+69.17	210,878.9552	2,124,009.6048

SCALE : 0 100 ft.

Baker
Michael Baker Jr., Inc.

REVISION NUMBER	SHEET NUMBER	REVISION	DATE	BY

THE WEST VIRGINIA DEPARTMENT OF TRANSPORTATION
DIVISION OF HIGHWAYS

GEOMETRIC LAYOUT

I:\proj\corridorh\sect5\contract 06\finaldes\cons106\drygeomlaye03.geo
08:18:59 AM
08/14/2003

Public Roads Div.	State Dist. No.	State Project No.	Federal Project No.	Fiscal Year	County	Sheet No.	Total Sheets
WV	5	X316 - H - 100.40 06	APD 0484 (251)C	2003	HARDY	30	670

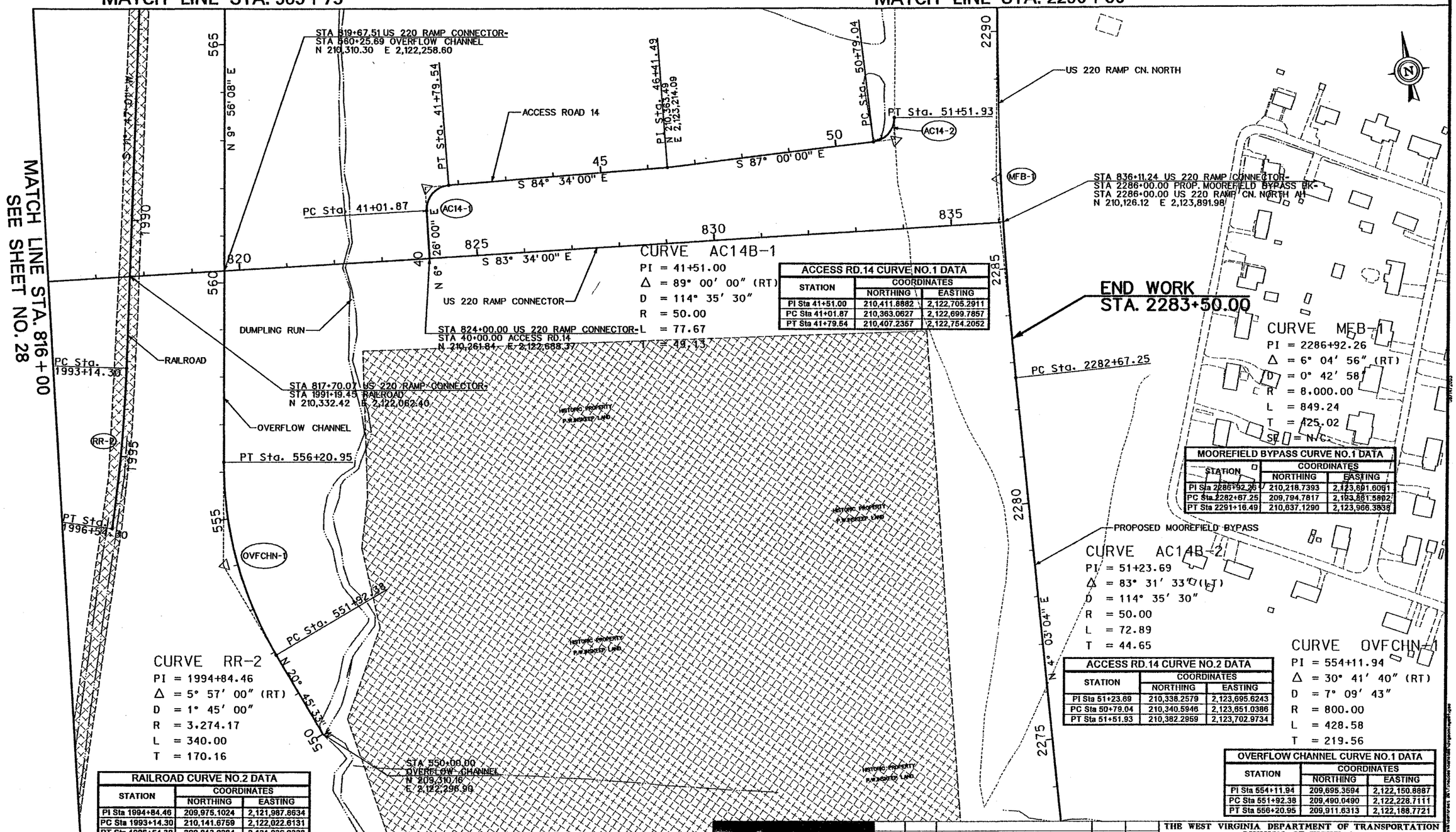

ACCESS RD.14 CURVE NO.1 DATA		
STATION	COORDINATES	
	NORTHING	EASTING
PI Sta 41+51.00	210,411.8882	2,122,705.2911
PC Sta 41+01.87	210,363.0627	2,122,699.7857
PT Sta 41+79.54	210,407.2357	2,122,754.2052

MOOREFIELD BYPASS CURVE NO.1 DATA		
STATION	COORDINATES	
	NORTHING	EASTING
PI Sta 2286+92.26	210,218.7393	2,123,891.6061
PC Sta 2282+67.25	209,794.7617	2,123,861.5892
PT Sta 2291+16.49	210,637.1290	2,123,966.3835

ACCESS RD.14 CURVE NO.2 DATA		
STATION	COORDINATES	
	NORTHING	EASTING
PI Sta 51+23.69	210,338.2579	2,123,695.6243
PC Sta 50+79.04	210,340.5946	2,123,851.0386
PT Sta 51+51.93	210,382.2959	2,123,702.9734

OVERFLOW CHANNEL CURVE NO.1 DATA		
STATION	COORDINATES	
	NORTHING	EASTING
PI Sta 554+11.94	209,695.3594	2,122,150.8887
PC Sta 551+92.38	209,490.0490	2,122,228.7111
PT Sta 556+20.95	209,911.6313	2,122,188.7721

RAILROAD CURVE NO.2 DATA		
STATION	COORDINATES	
	NORTHING	EASTING
PI Sta 1994+84.46	209,975.1024	2,121,987.8634
PC Sta 1993+14.30	210,141.6759	2,122,022.6131
PT Sta 1996+54.30	209,813.0284	2,121,936.0338

Baker
Michael Baker Jr., Inc.

REVISION NUMBER	SHEET NUMBER	REVISION	DATE	BY

THE WEST VIRGINIA DEPARTMENT OF TRANSPORTATION
DIVISION OF HIGHWAYS

GEOMETRIC LAYOUT

08/14/2003 08:19:35 AM
I:\proj\corridorh\sect5\contract 06\finalses\cont506\dvgeomlaye04.geo

Public Roads Div.	State Dist. No.	State Project No.	Federal Project No.	Fiscal Year	County	Sheet No.	Total Sheets
WV	5	X316 - H - 100.40 06	APD 0484 (251)C	2003	HARDY	31	670

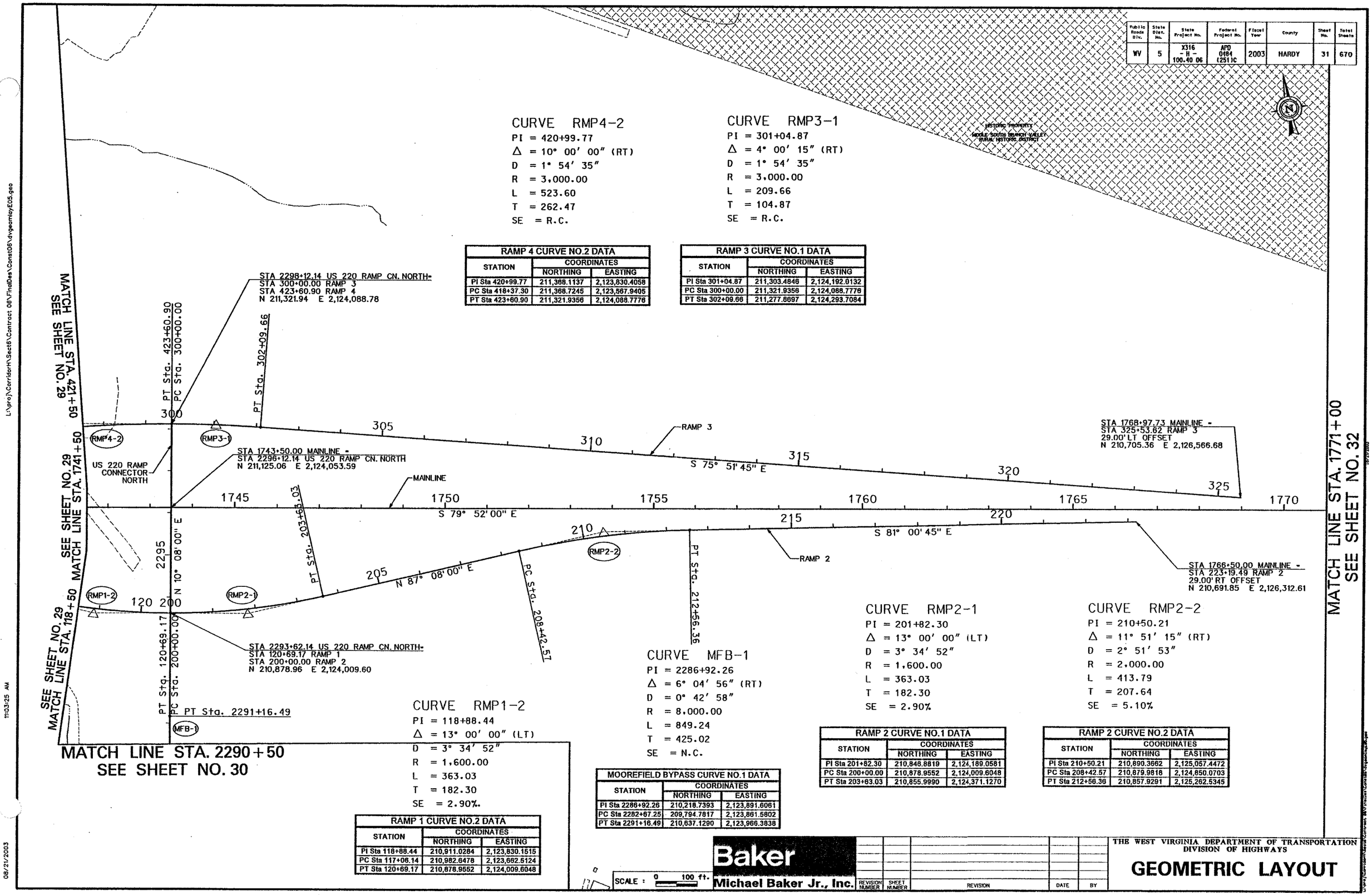

CURVE RMP4-2

PI = 420+99.77
Δ = 10° 00′ 00″ (RT)
D = 1° 54′ 35″
R = 3,000.00
L = 523.60
T = 262.47
SE = R.C.

RAMP 4 CURVE NO.2 DATA		
STATION	COORDINATES	
	NORTHING	EASTING
PI Sta 420+99.77	211,368.1137	2,123,830.4058
PC Sta 418+37.30	211,368.7245	2,123,567.9405
PT Sta 423+60.90	211,321.9356	2,124,088.7776

CURVE RMP3-1

PI = 301+04.87
Δ = 4° 00′ 15″ (RT)
D = 1° 54′ 35″
R = 3,000.00
L = 209.66
T = 104.87
SE = R.C.

RAMP 3 CURVE NO.1 DATA		
STATION	COORDINATES	
	NORTHING	EASTING
PI Sta 301+04.87	211,303.4846	2,124,192.0132
PC Sta 300+00.00	211,321.9356	2,124,088.7776
PT Sta 302+09.66	211,277.8697	2,124,293.7084

CURVE RMP1-2

PI = 118+88.44
Δ = 13° 00′ 00″ (LT)
D = 3° 34′ 52″
R = 1,600.00
L = 363.03
T = 182.30
SE = 2.90%.

RAMP 1 CURVE NO.2 DATA		
STATION	COORDINATES	
	NORTHING	EASTING
PI Sta 118+88.44	210,911.0284	2,123,830.1515
PC Sta 117+06.14	210,982.6478	2,123,662.5124
PT Sta 120+69.17	210,878.9552	2,124,009.6048

CURVE MFB-1

PI = 2286+92.26
Δ = 6° 04′ 56″ (RT)
D = 0° 42′ 58″
R = 8,000.00
L = 849.24
T = 425.02
SE = N.C.

MOOREFIELD BYPASS CURVE NO.1 DATA		
STATION	COORDINATES	
	NORTHING	EASTING
PI Sta 2286+92.26	210,218.7393	2,123,891.6061
PC Sta 2282+67.25	209,794.7817	2,123,861.5802
PT Sta 2291+16.49	210,637.1290	2,123,966.3838

CURVE RMP2-1

PI = 201+82.30
Δ = 13° 00′ 00″ (LT)
D = 3° 34′ 52″
R = 1,600.00
L = 363.03
T = 182.30
SE = 2.90%

RAMP 2 CURVE NO.1 DATA		
STATION	COORDINATES	
	NORTHING	EASTING
PI Sta 201+82.30	210,846.8819	2,124,189.0581
PC Sta 200+00.00	210,878.9552	2,124,009.6048
PT Sta 203+63.03	210,855.9990	2,124,371.1270

CURVE RMP2-2

PI = 210+50.21
Δ = 11° 51′ 15″ (RT)
D = 2° 51′ 53″
R = 2,000.00
L = 413.79
T = 207.64
SE = 5.10%

RAMP 2 CURVE NO.2 DATA		
STATION	COORDINATES	
	NORTHING	EASTING
PI Sta 210+50.21	210,890.3662	2,125,057.4472
PC Sta 208+42.57	210,879.9818	2,124,850.0703
PT Sta 212+56.36	210,857.9291	2,125,262.5345

SCALE : 0 100 ft.

Baker
Michael Baker Jr., Inc.

REVISION NUMBER	SHEET NUMBER	REVISION	DATE	BY

THE WEST VIRGINIA DEPARTMENT OF TRANSPORTATION
DIVISION OF HIGHWAYS

GEOMETRIC LAYOUT

L:\proj\CorridorH\Sect6\Contract 06\FinalDes\Const06\drgeomlayE05.geo
11:03:25 AM
08/21/2003

Public Roads Div.	State Dist. No.	State Project No.	Federal Project No.	Fiscal Year	County	Sheet No.	Total Sheets
WV	5	X316 - H - 100.40 06	APD 0484 (251)C	2003	HARDY	32	670

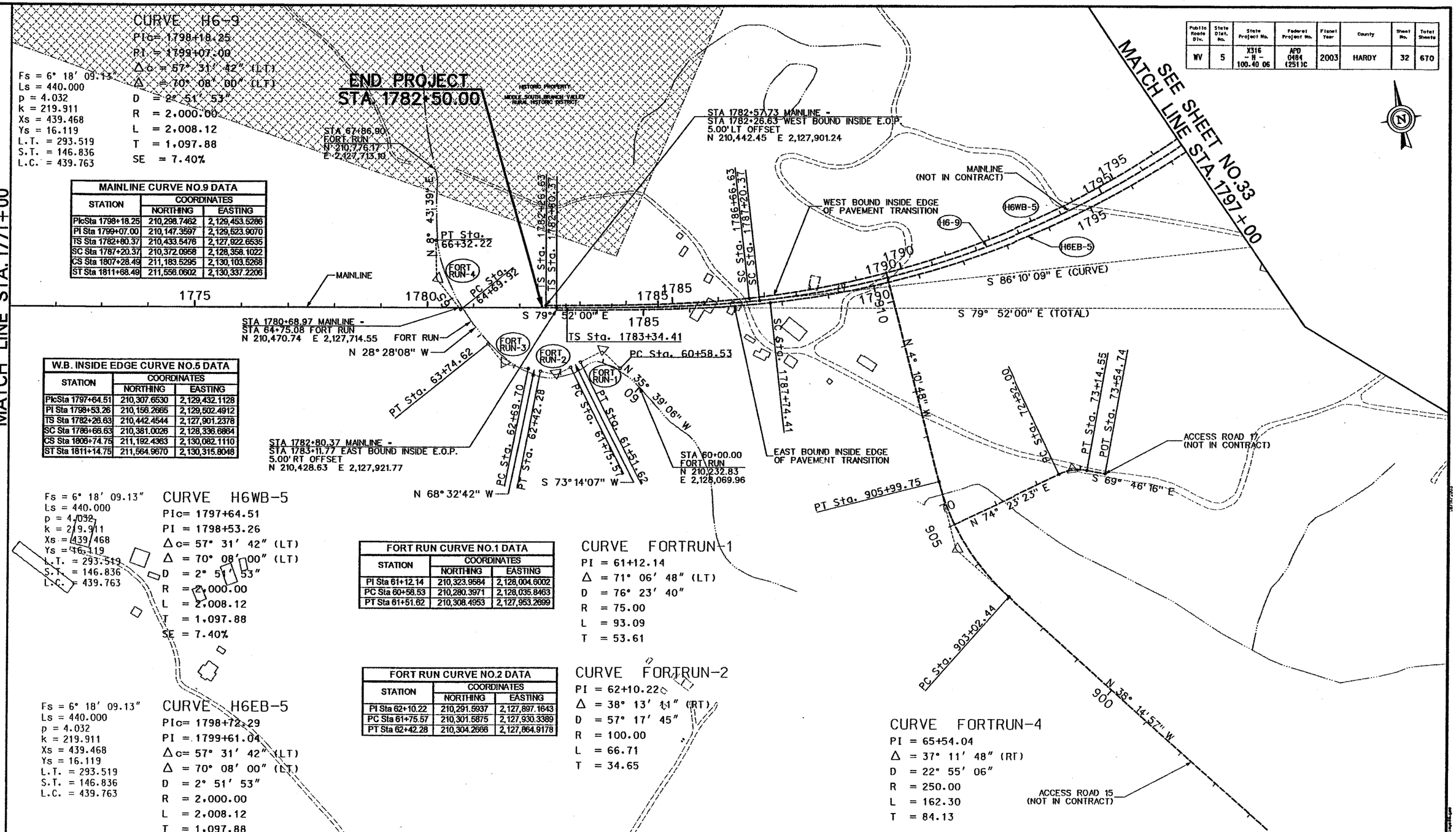

CURVE H6-9
PIc= 1798+18.25
PI = 1799+07.00
Δc = 57° 31' 42" (LT)
Δ = 70° 08' 00" (LT)
D = 2° 51' 53"
R = 2,000.00
L = 2,008.12
T = 1,097.88
SE = 7.40%

Fs = 6° 18' 09.13"
Ls = 440.000
p = 4.032
k = 219.911
Xs = 439.468
Ys = 16.119
L.T. = 293.519
S.T. = 146.836
L.C. = 439.763

MAINLINE CURVE NO.9 DATA		
STATION	COORDINATES	
	NORTHING	EASTING
PIcSta 1798+18.25	210,298.7462	2,129,453.5266
PI Sta 1799+07.00	210,147.3597	2,129,523.9070
TS Sta 1782+80.37	210,433.5476	2,127,922.6535
SC Sta 1787+20.37	210,372.0958	2,128,358.1022
CS Sta 1807+28.49	211,183.5295	2,130,103.5268
ST Sta 1811+68.49	211,556.0602	2,130,337.2206

W.B. INSIDE EDGE CURVE NO.5 DATA		
STATION	COORDINATES	
	NORTHING	EASTING
PIcSta 1797+64.51	210,307.6530	2,129,432.1128
PI Sta 1798+53.26	210,156.2665	2,129,502.4912
TS Sta 1782+26.63	210,442.4544	2,127,901.2378
SC Sta 1786+66.63	210,381.0026	2,128,336.6864
CS Sta 1806+74.75	211,192.4363	2,130,082.1110
ST Sta 1811+14.75	211,564.9670	2,130,315.8048

CURVE H6WB-5
PIc= 1797+64.51
PI = 1798+53.26
Δc= 57° 31' 42" (LT)
Δ = 70° 08' 00" (LT)
D = 2° 51' 53"
R = 2,000.00
L = 2,008.12
T = 1,097.88
SE = 7.40%

Fs = 6° 18' 09.13"
Ls = 440.000
p = 4.032
k = 219.911
Xs = 439.468
Ys = 16.119
L.T. = 293.519
S.T. = 146.836
L.C. = 439.763

FORT RUN CURVE NO.1 DATA		
STATION	COORDINATES	
	NORTHING	EASTING
PI Sta 61+12.14	210,323.9584	2,128,004.6002
PC Sta 60+58.53	210,280.3971	2,128,035.8463
PT Sta 61+51.62	210,308.4953	2,127,953.2699

CURVE FORTRUN-1
PI = 61+12.14
Δ = 71° 06' 48" (LT)
D = 76° 23' 40"
R = 75.00
L = 93.09
T = 53.61

FORT RUN CURVE NO.2 DATA		
STATION	COORDINATES	
	NORTHING	EASTING
PI Sta 62+10.22	210,291.5937	2,127,897.1643
PC Sta 61+75.57	210,301.5875	2,127,930.3389
PT Sta 62+42.28	210,304.2666	2,127,864.9178

CURVE FORTRUN-2
PI = 62+10.22
Δ = 38° 13' 11" (RT)
D = 57° 17' 45"
R = 100.00
L = 66.71
T = 34.65

Fs = 6° 18' 09.13"
Ls = 440.000
p = 4.032
k = 219.911
Xs = 439.468
Ys = 16.119
L.T. = 293.519
S.T. = 146.836
L.C. = 439.763

CURVE H6EB-5
PIc= 1798+72.29
PI = 1799+61.04
Δc= 57° 31' 42" (LT)
Δ = 70° 08' 00" (LT)
D = 2° 51' 53"
R = 2,000.00
L = 2,008.12
T = 1,097.88
SE = 7.40%

CURVE FORTRUN-3
PI = 63+24.41
Δ = 40° 04' 34" (RT)
D = 38° 11' 50"
R = 150.00
L = 104.92
T = 54.71

FORT RUN CURVE NO.3 DATA		
STATION	COORDINATES	
	NORTHING	EASTING
PI Sta 63+24.41	210,334.3100	2,127,788.4717
PC Sta 62+69.70	210,314.2994	2,127,839.3892
PT Sta 63+74.62	210,382.4029	2,127,762.3931

CURVE FORTRUN-4
PI = 65+54.04
Δ = 37° 11' 48" (RT)
D = 22° 55' 06"
R = 250.00
L = 162.30
T = 84.13

FORT RUN CURVE NO.4 DATA		
STATION	COORDINATES	
	NORTHING	EASTING
PI Sta 65+54.04	210,540.1250	2,127,676.8676
PC Sta 64+69.92	210,466.1719	2,127,716.9690
PT Sta 66+32.22	210,623.2769	2,127,689.6327

E.B. INSIDE EDGE CURVE NO.5 DATA		
STATION	COORDINATES	
	NORTHING	EASTING
PIcSta 1798+72.29	210,289.8394	2,129,474.9443
PI Sta 1799+61.04	210,138.4529	2,129,545.3227
TS Sta 1783+34.41	210,424.6408	2,127,944.0693
SC Sta 1787+74.41	210,363.1890	2,128,379.5179
CS Sta 1807+82.53	211,174.6227	2,130,124.9426
ST Sta 1812+22.53	211,547.1534	2,130,358.6363

SCALE : 0 100 ft.

Baker
Michael Baker Jr., Inc.

REVISION NUMBER	SHEET NUMBER	REVISION	DATE	BY

THE WEST VIRGINIA DEPARTMENT OF TRANSPORTATION
DIVISION OF HIGHWAYS

GEOMETRIC LAYOUT

I:\proj\corridor\sect5\contract 06\finales\cont06\dvgeomlayo06.geo
08:20:53 AM
08/14/2003

Public Roads Div.	State Dist. No.	State Project No.	Federal Project No.	Fiscal Year	County	Sheet No.	Total Sheets
WV	5	X316 - H - 100.40 06	APD 0484 (251)C	2003	HARDY	33	670

CURVE H6-9

PIc= 1798+18.25
PI = 1799+07.00
Δc= 57° 31′ 42″ (LT)
Δ = 70° 08′ 00″ (LT)
D = 2° 51′ 53″
R = 2,000.00
L = 2,008.12
T = 1,097.88
SE = 7.40%

Fs = 6° 18′ 09.13″
Ls = 440.000
p = 4.032
k = 219.911
Xs = 439.468
Ys = 16.119
L.T. = 293.519
S.T. = 146.836
L.C. = 439.763

MAINLINE CURVE NO.9 DATA

STATION	COORDINATES	
	NORTHING	EASTING
PIcSta 1798+18.25	210,298.7462	2,129,453.5286
PI Sta 1799+07.00	210,147.3597	2,129,523.9070
TS Sta 1782+80.37	210,433.5476	2,127,922.6535
SC Sta 1787+20.37	210,372.0958	2,128,358.1022
CS Sta 1807+28.49	211,183.5295	2,130,103.5268
ST Sta 1811+68.49	211,556.0602	2,130,337.2206

W.B. INSIDE EDGE CURVE NO.5 DATA

STATION	COORDINATES	
	NORTHING	EASTING
PIcSta 1797+64.51	210,307.6530	2,129,432.1128
PI Sta 1798+53.26	210,156.2665	2,129,502.4912
TS Sta 1782+26.63	210,442.4544	2,127,901.2378
SC Sta 1786+66.63	210,381.0026	2,128,336.6864
CS Sta 1806+74.75	211,192.4363	2,130,082.1110
ST Sta 1811+14.75	211,564.9670	2,130,315.8046

CURVE H6WB-5

PIc= 1797+64.51
PI = 1798+53.26
Δc= 57° 31′ 42″ (LT)
Δ = 70° 08′ 00″ (LT)
D = 2° 51′ 53″
R = 2,000.00
L = 2,008.12
T = 1,097.88
SE = 7.40%

Fs = 6° 18′ 09.13″
Ls = 440.000
p = 4.032
k = 219.911
Xs = 439.468
Ys = 16.119
L.T. = 293.519
S.T. = 146.836
L.C. = 439.763

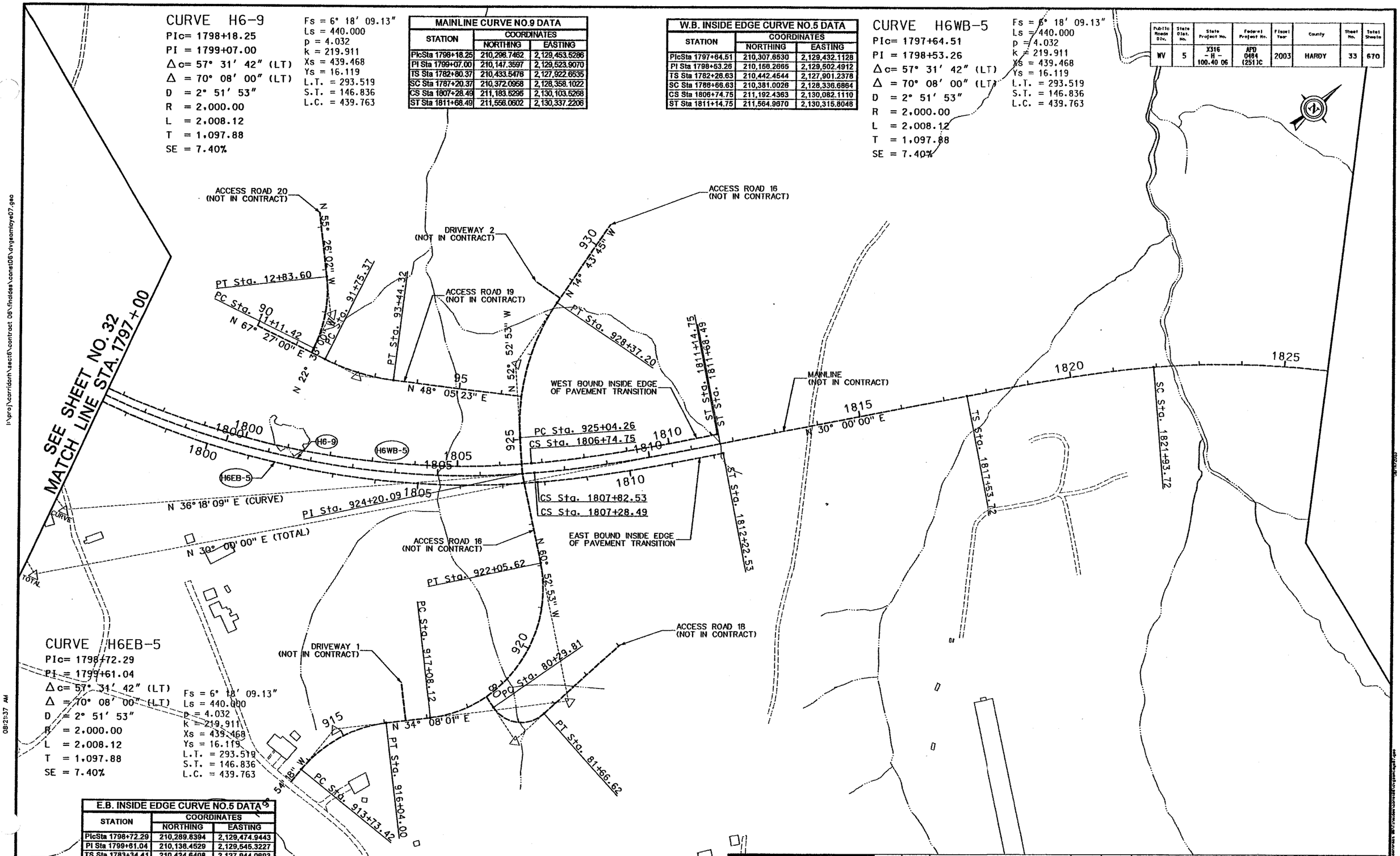

CURVE H6EB-5

PIc= 1798+72.29
PI = 1799+61.04
Δc= 57° 31′ 42″ (LT)
Δ = 70° 08′ 00″ (LT)
D = 2° 51′ 53″
R = 2,000.00
L = 2,008.12
T = 1,097.88
SE = 7.40%

Fs = 6° 18′ 09.13″
Ls = 440.000
p = 4.032
k = 219.911
Xs = 439.468
Ys = 16.119
L.T. = 293.519
S.T. = 146.836
L.C. = 439.763

E.B. INSIDE EDGE CURVE NO.5 DATA

STATION	COORDINATES	
	NORTHING	EASTING
PIcSta 1798+72.29	210,289.8394	2,129,474.9443
PI Sta 1799+61.04	210,138.4529	2,129,545.3227
TS Sta 1783+34.41	210,424.6408	2,127,944.0693
SC Sta 1787+74.41	210,363.1890	2,128,379.5179
CS Sta 1807+82.53	211,174.6227	2,130,124.9426
ST Sta 1812+22.53	211,547.1534	2,130,356.6363

SCALE : 0 100 ft.

Baker
Michael Baker Jr., Inc.

REVISION NUMBER	SHEET NUMBER	REVISION	DATE	BY

THE WEST VIRGINIA DEPARTMENT OF TRANSPORTATION
DIVISION OF HIGHWAYS

GEOMETRIC LAYOUT

08/14/2003 08:21:37 AM

Public Roads Div.	State Dist. No.	State Project No.	Federal Project No.	Fiscal Year	County	Sheet No.	Total Sheets
WV	5	X316 - H - 100.40 06	APD 0461 (251)C	2003	HARDY	34	670

US 220

THE WEST VIRGINIA DEPARTMENT OF TRANSPORTATION
DIVISION OF HIGHWAYS

PAVEMENT DETAILS

SCALE : 0 20 ft.

Baker
Michael Baker Jr., Inc.

REVISION NUMBER	SHEET NUMBER	REVISION	DATE	BY

08/12/2003 03:48:51 PM

Public Roads Div.	State Dist. No.	State Project No.	Federal Project No.	Fiscal Year	County	Sheet No.	Total Sheets
WV	5	X316 - H - 100.40 06	APD 0484 (251)C	2003	HARDY	35	670

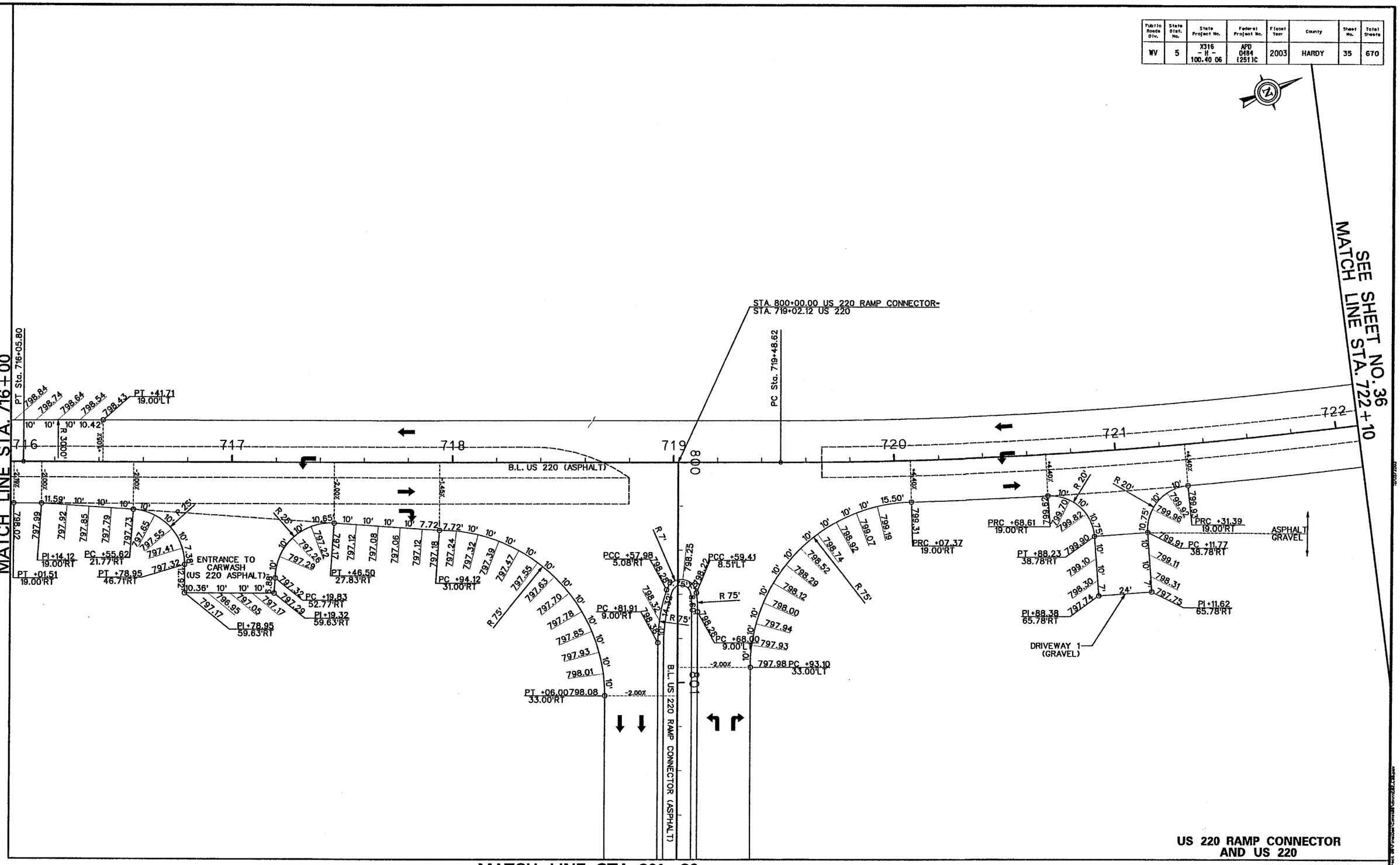

MATCH LINE STA. 801+80
SEE SHEET NO. 44

US 220 RAMP CONNECTOR
AND US 220

SCALE : 0 20 ft.

Baker
Michael Baker Jr., Inc.

REVISION NUMBER	SHEET NUMBER	REVISION	DATE	BY

THE WEST VIRGINIA DEPARTMENT OF TRANSPORTATION
DIVISION OF HIGHWAYS

PAVEMENT DETAILS

L:\proj\Corridor H\Sect6\Contract 06\FinalDes\Const06\dvintE02_C06.pav

01:43:35 PM

12/05/2003

Public Roads Div.	State Dist. No.	State Project No.	Federal Project No.	Fiscal Year	County	Sheet No.	Total Sheets
WV	5	X316 - H - 100.40 06	APD 0484 (251)C	2003	HARDY	36	670

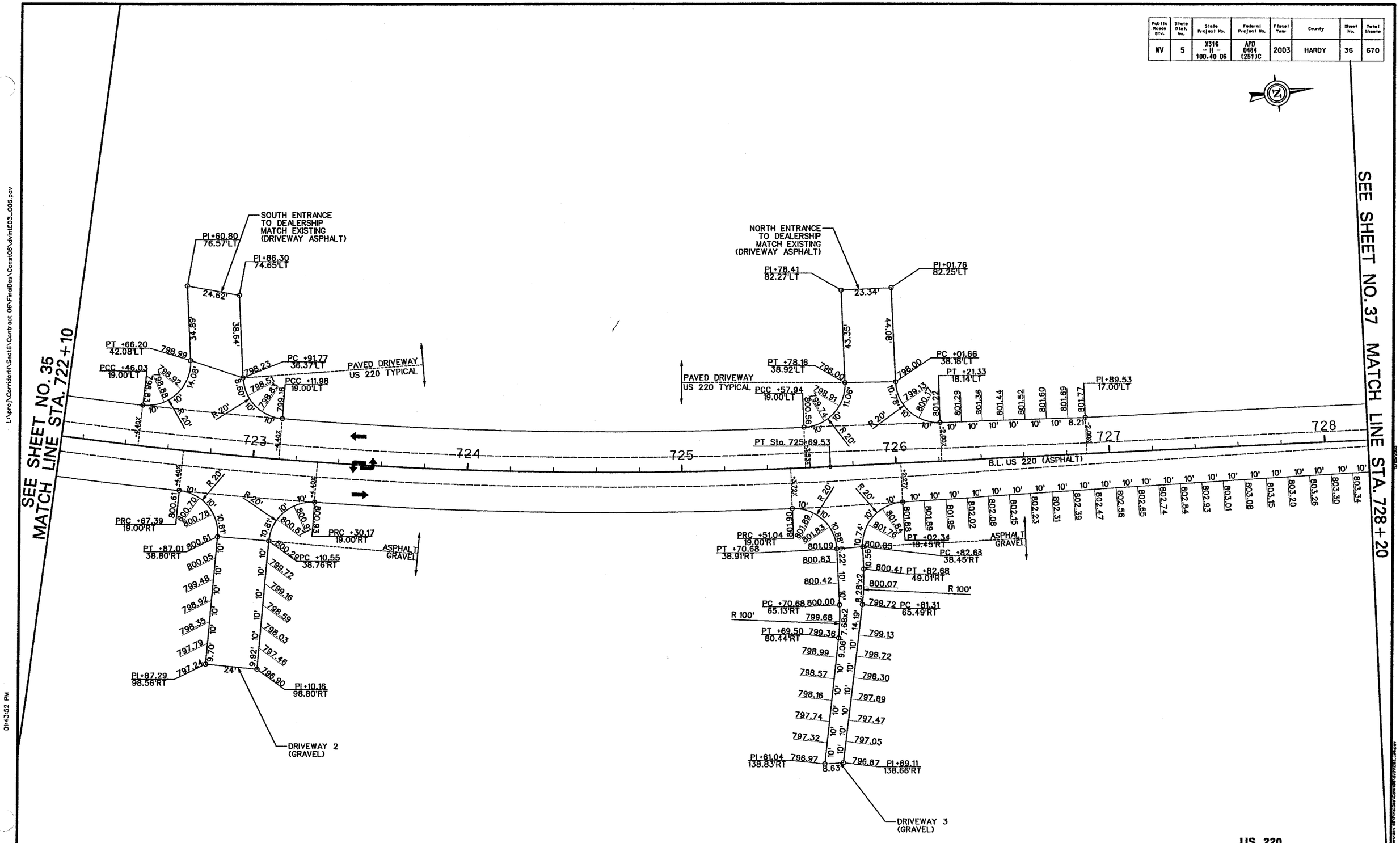

SCALE : 0 20 ft.

Baker
Michael Baker Jr., Inc.

REVISION NUMBER	SHEET NUMBER	REVISION	DATE	BY

US 220

THE WEST VIRGINIA DEPARTMENT OF TRANSPORTATION
DIVISION OF HIGHWAYS

PAVEMENT DETAILS

L:\proj\Corridor H\Sect6\Contract 06\FinalDes\Const06\dvintE03_C06.pov

01:43:52 PM

12/05/2003

Public Roads Div.	State Dist. No.	State Project No.	Federal Project No.	Fiscal Year	County	Sheet No.	Total Sheets
WV	5	X316 - H - 100.40 06	APD 0484 (251)C	2003	HARDY	37	670

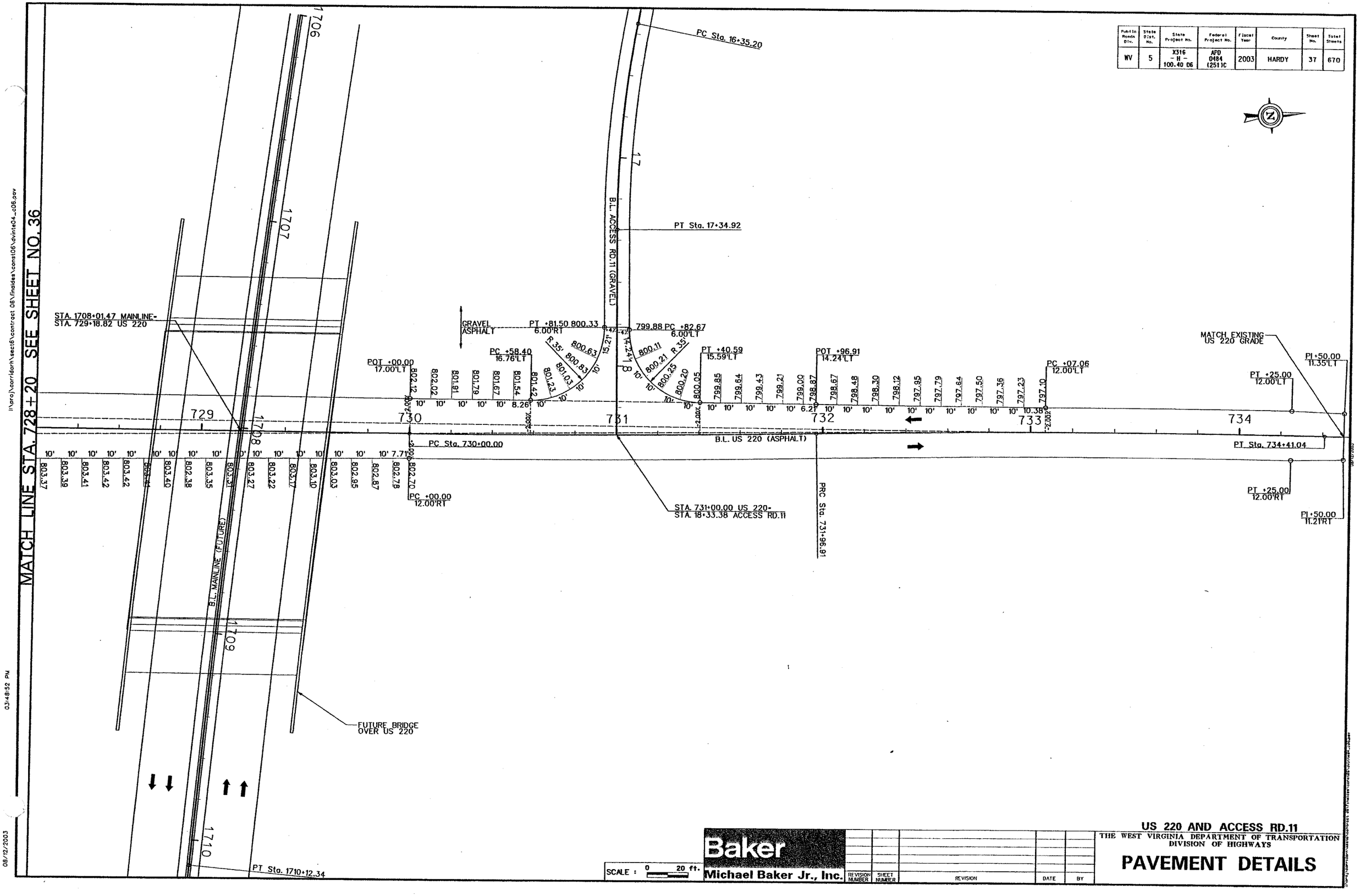

Public Roads Div.	State Dist. No.	State Project No.	Federal Project No.	Fiscal Year	County	Sheet No.	Total Sheets
WV	5	X316 - H - 100.40 06	APD 0484 (2511C	2003	HARDY	38	670

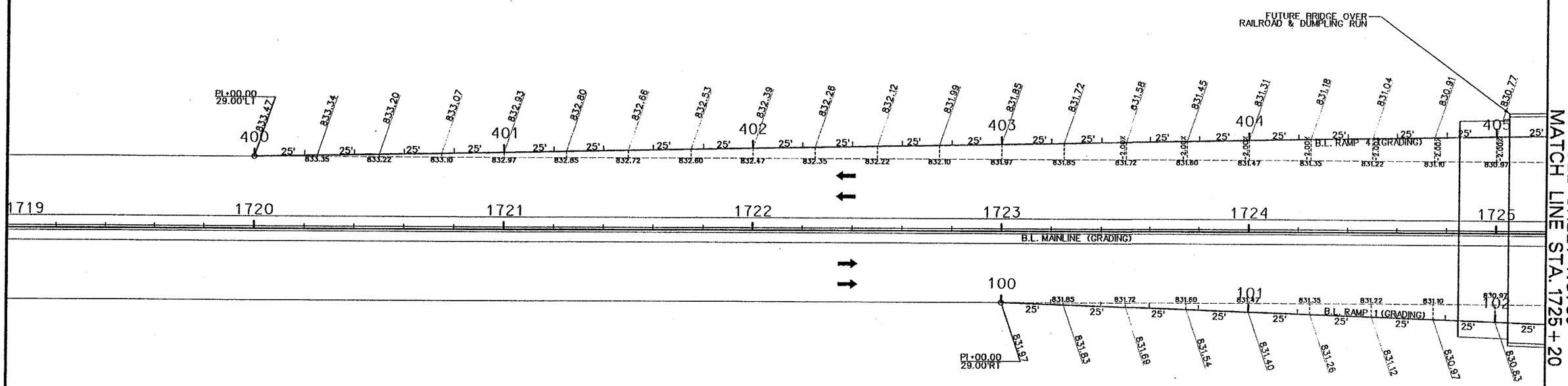

NOTE: ALL ELEVATIONS SHOWN ARE FOR INFORMATION ONLY. ELEVATIONS REPRESENT FUTURE FINISHED GRADE.

SCALE : 0 20 ft.

Baker
Michael Baker Jr., Inc.

REVISION NUMBER	SHEET NUMBER	REVISION	DATE	BY

MAINLINE AND RAMP 1, RAMP 4

THE WEST VIRGINIA DEPARTMENT OF TRANSPORTATION
DIVISION OF HIGHWAYS

PAVEMENT DETAILS

I:\proj\corridorh\sect6\contract 06\finaldes\const06\dvinta05_c06.pav

03:48:53 PM

08/12/2003

Public Roads Div.	State Dist. No.	State Project No.	Federal Project No.	Fiscal Year	County	Sheet No.	Total Sheets
WV	5	X316 - H - 100.40 06	APD 0484 (251)C	2003	HARDY	39	670

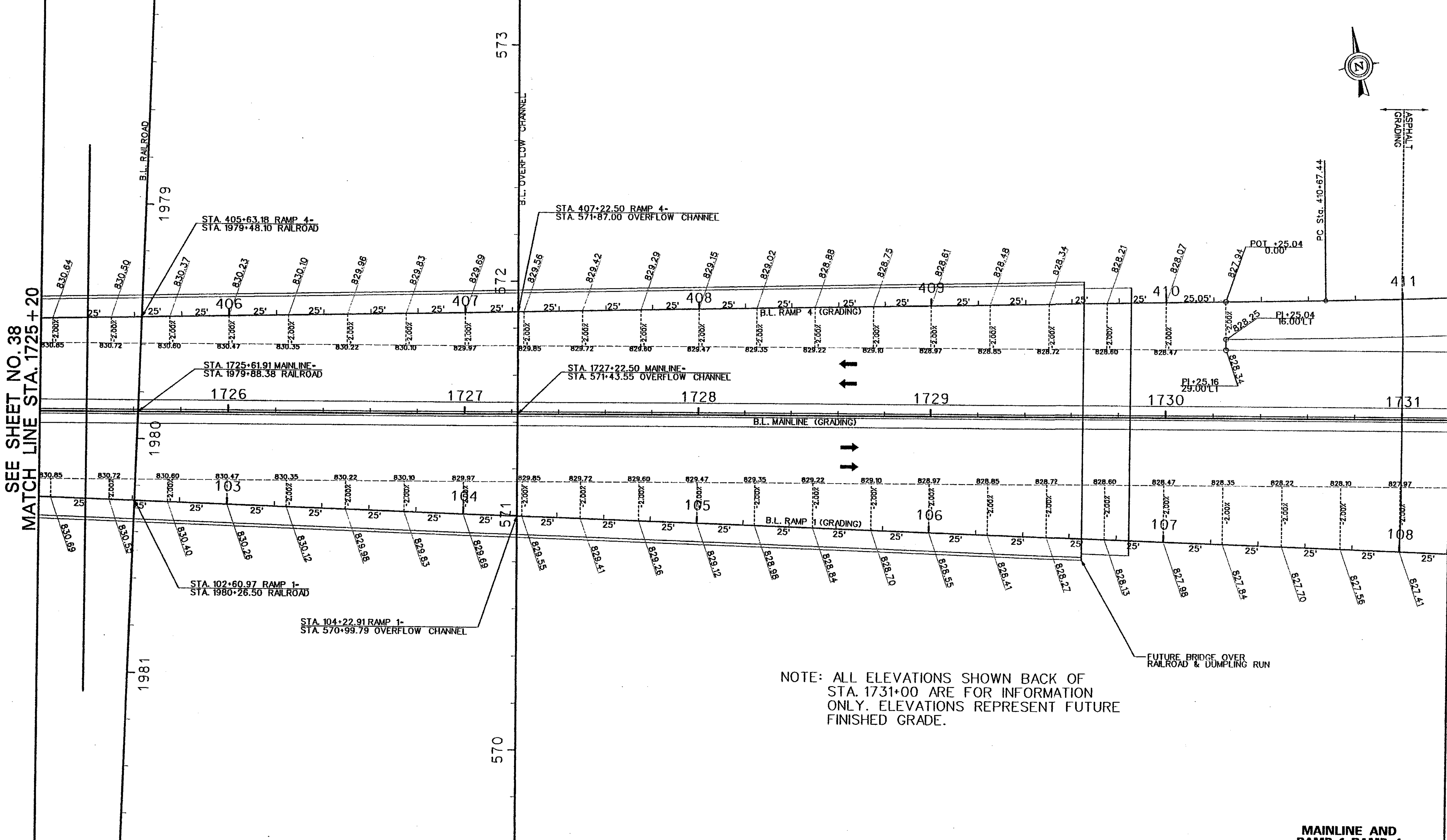

NOTE: ALL ELEVATIONS SHOWN BACK OF STA. 1731+00 ARE FOR INFORMATION ONLY. ELEVATIONS REPRESENT FUTURE FINISHED GRADE.

SCALE : 0 20 ft.

Baker
Michael Baker Jr., Inc.

REVISION NUMBER	SHEET NUMBER	REVISION	DATE	BY

MAINLINE AND
RAMP 1, RAMP 4

THE WEST VIRGINIA DEPARTMENT OF TRANSPORTATION
DIVISION OF HIGHWAYS

PAVEMENT DETAILS

08/12/2003 03:48:54 PM

Public Roads Div.	State Dist. No.	State Project No.	Federal Project No.	Fiscal Year	County	Sheet No.	Total Sheets
WV	5	X316 - H - 100.40 06	APD 0484 (251)C	2003	HARDY	40	670

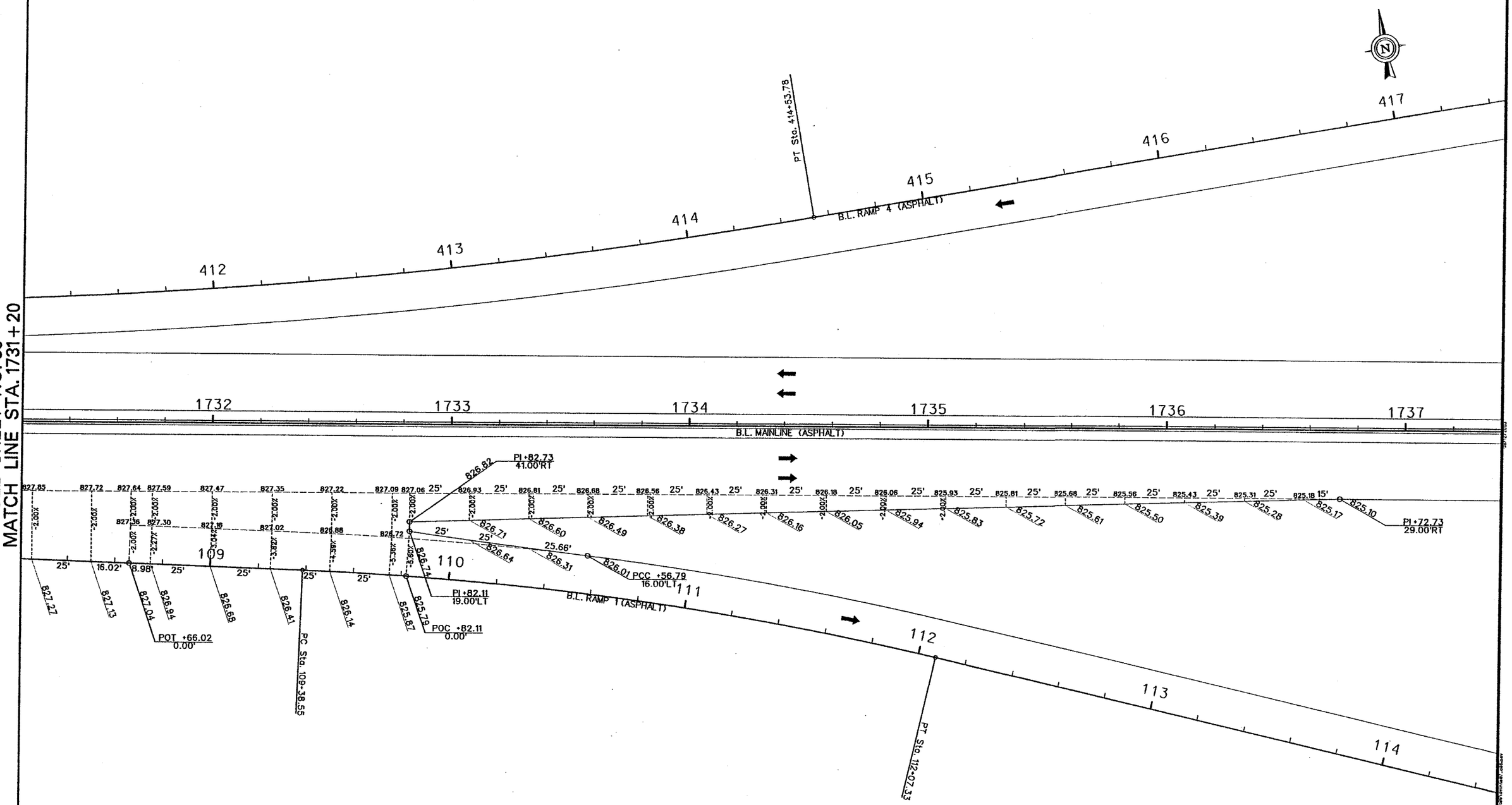

SCALE : 0 20 ft.

Baker
Michael Baker Jr., Inc.

REVISION NUMBER	SHEET NUMBER	REVISION	DATE	BY

THE WEST VIRGINIA DEPARTMENT OF TRANSPORTATION
DIVISION OF HIGHWAYS

MAINLINE AND RAMP 1, RAMP 4

PAVEMENT DETAILS

I:\proj\corridorh\sect6\contract 06\finaldes\const06\dvinte07_c06.pav

03:48:54 PM

08/12/2003

Public Roads Div.	State Dist. No.	State Project No.	Federal Project No.	Fiscal Year	County	Sheet No.	Total Sheets
WV	5	X316 - H - 100.40 06	APD 0484 (251)C	2003	HARDY	41	670

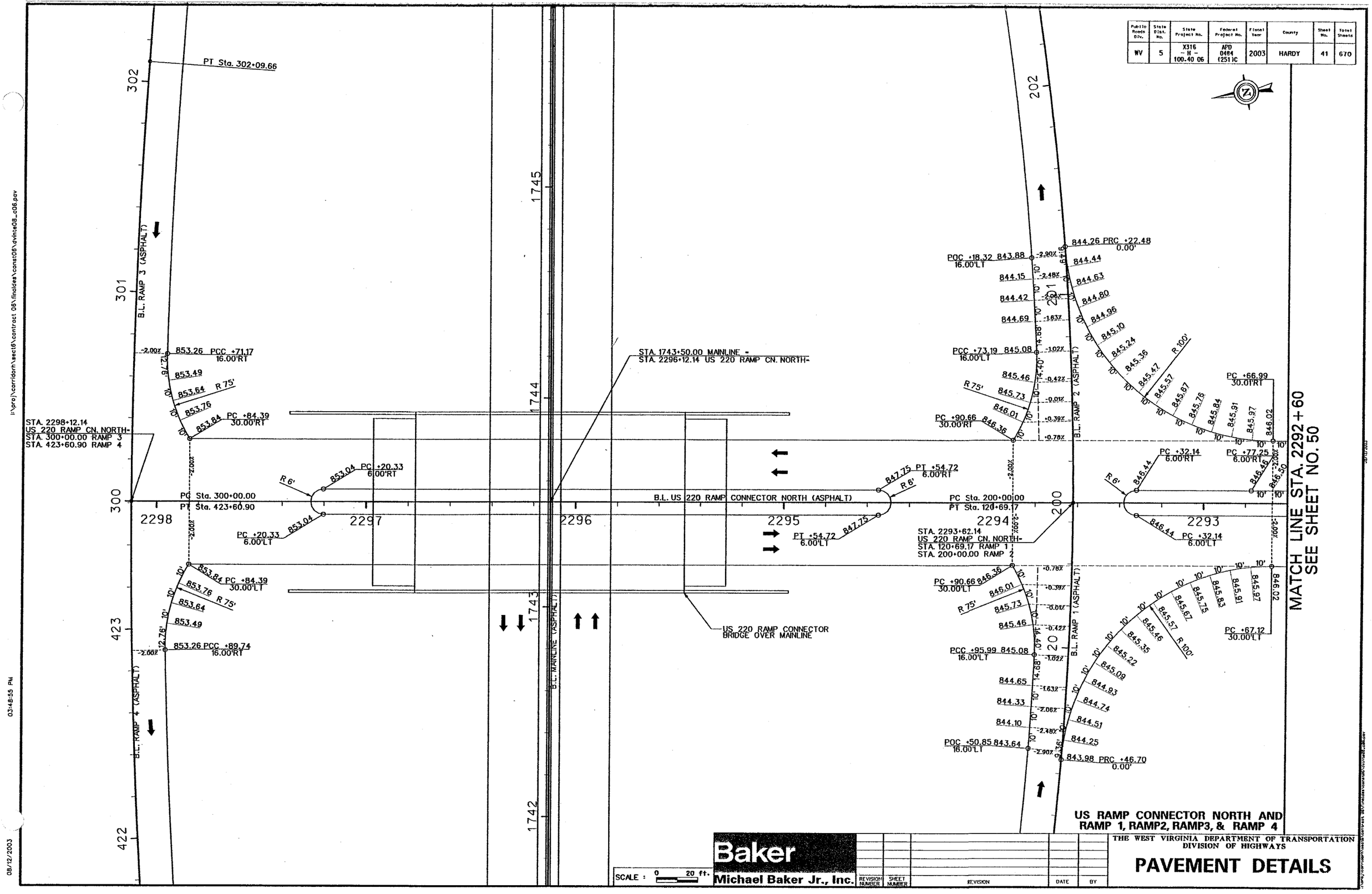

Baker
Michael Baker Jr., Inc.

REVISION NUMBER	SHEET NUMBER	REVISION	DATE	BY

THE WEST VIRGINIA DEPARTMENT OF TRANSPORTATION
DIVISION OF HIGHWAYS

PAVEMENT DETAILS

US RAMP CONNECTOR NORTH AND RAMP 1, RAMP2, RAMP3, & RAMP 4

08/12/2003 03:48:55 PM

Public Roads Div.	State Dist. No.	State Project No.	Federal Project No.	Fiscal Year	County	Sheet No.	Total Sheets
WV	5	X316 - H - 100.40 06	APD 0484 (251)C	2003	HARDY	42	670

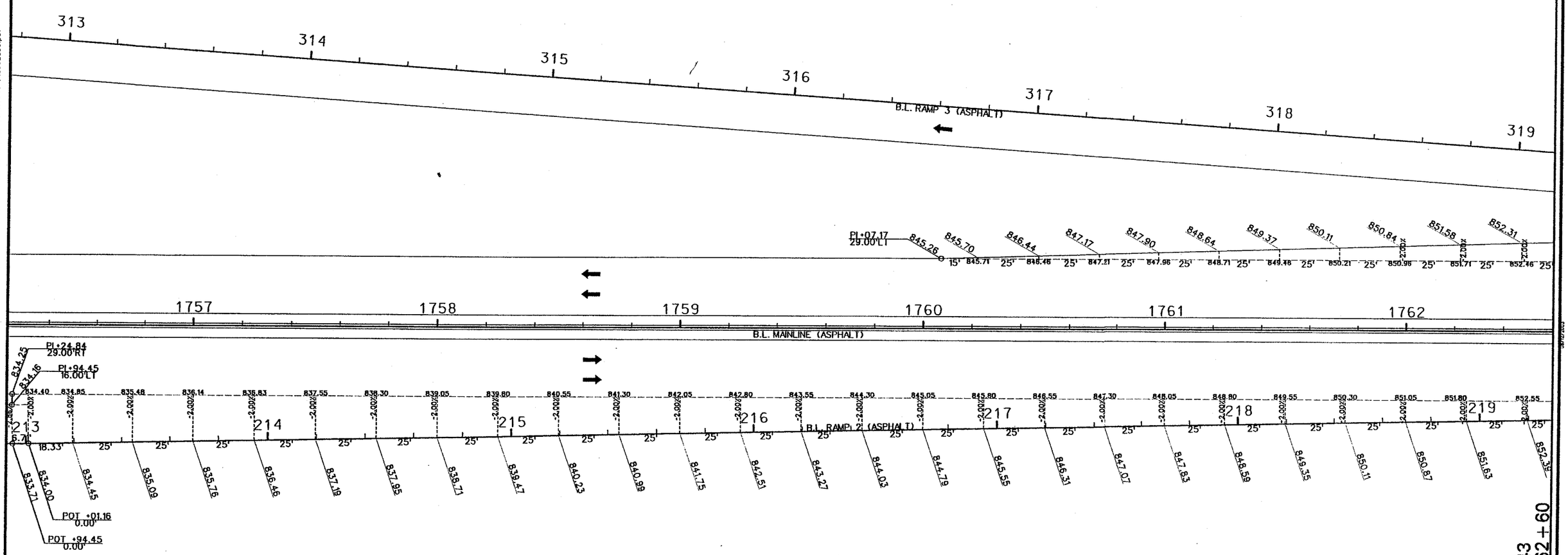

SEE SHEET NO. 43
MATCH LINE STA. 1762+60

MAINLINE AND RAMP 2, RAMP 3

SCALE : 0 20 ft.

Baker
Michael Baker Jr., Inc.

REVISION NUMBER	SHEET NUMBER	REVISION	DATE	BY

THE WEST VIRGINIA DEPARTMENT OF TRANSPORTATION
DIVISION OF HIGHWAYS

PAVEMENT DETAILS

I:\proj\corridorh\sect5\contract 06\finaldes\const06\dvinte09_c06.pov
03:48:56 PM
08/12/2003

Public Roads Div.	State Dist. No.	State Project No.	Federal Project No.	Fiscal Year	County	Sheet No.	Total Sheets
WV	5	X316 - H - 100.40 06	APD 0484 (251)C	2003	HARDY	43	670

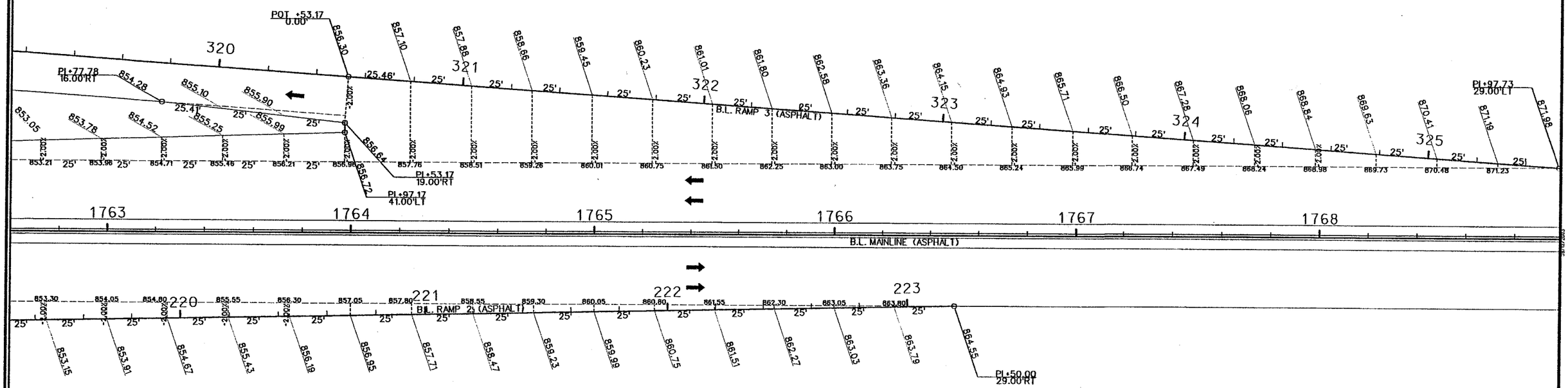

MATCH LINE STA. 1762+60
SEE SHEET NO. 42

SCALE : 0 20 ft.

Baker
Michael Baker Jr., Inc.

REVISION NUMBER	SHEET NUMBER	REVISION	DATE	BY

THE WEST VIRGINIA DEPARTMENT OF TRANSPORTATION
DIVISION OF HIGHWAYS

MAINLINE AND RAMP 2, RAMP 3

PAVEMENT DETAILS

08/12/2003 03:48:56 PM

Public Roads Div.	State Dist. No.	State Project No.	Federal Project No.	Fiscal Year	County	Sheet No.	Total Sheets
WV	5	X316 - H - 100.40 06	APD 0484 (251)C	2003	HARDY	44	670

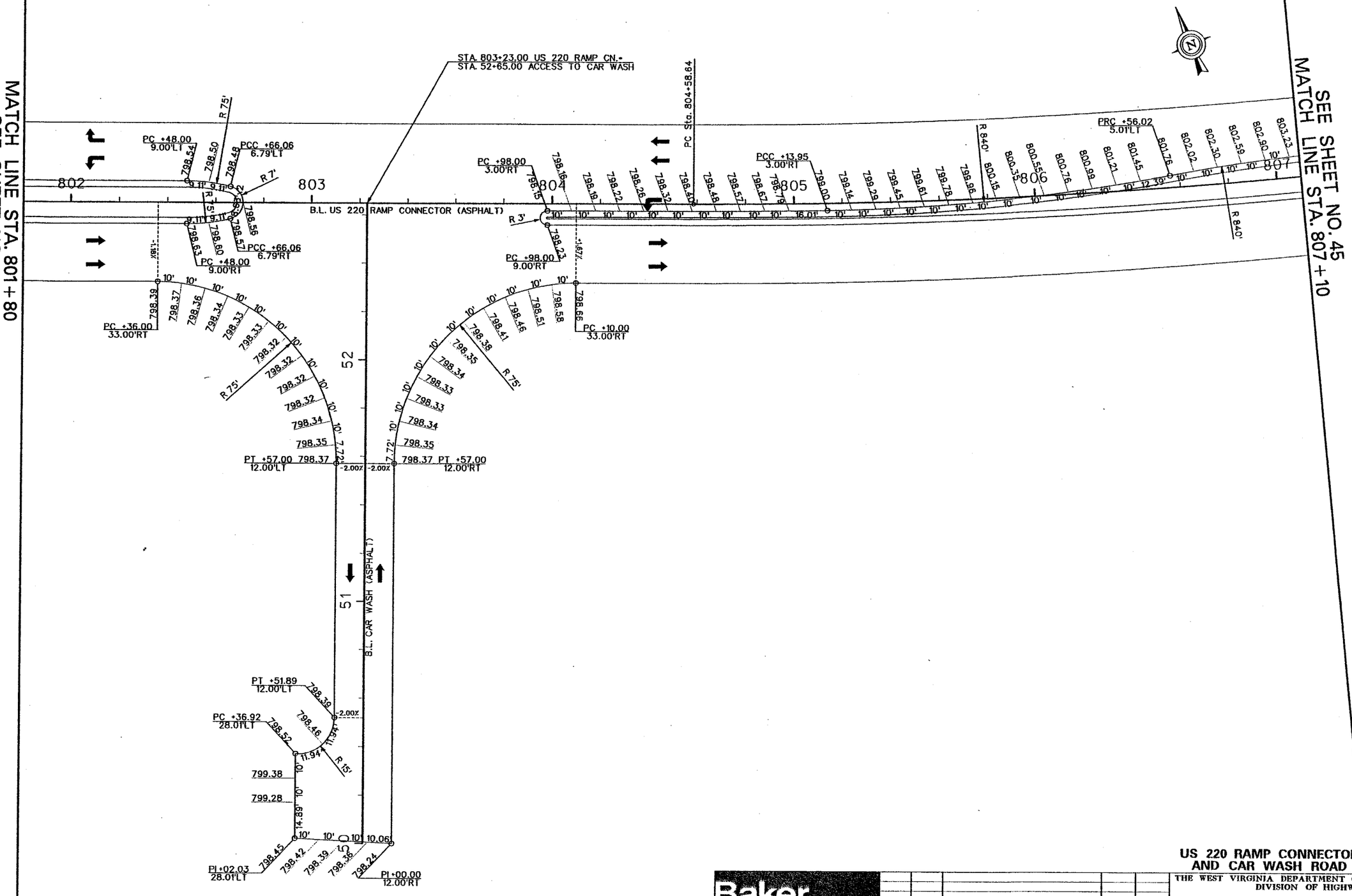

US 220 RAMP CONNECTOR
AND CAR WASH ROAD

THE WEST VIRGINIA DEPARTMENT OF TRANSPORTATION
DIVISION OF HIGHWAYS

PAVEMENT DETAILS

SCALE : 0 20 ft.

Baker
Michael Baker Jr., Inc.

REVISION NUMBER	SHEET NUMBER	REVISION	DATE	BY

I:\proj\corridorh\sect6\contract 06\finaldes\cons06\dvinte1_c06.pov

03:48:57 PM

08/12/2003

Public Roads Div.	State Dist. No.	State Project No.	Federal Project No.	Fiscal Year	County	Sheet No.	Total Sheets
WV	5	X316 - H - 100.40 06	APD 0484 (251)C	2003	HARDY	45	670

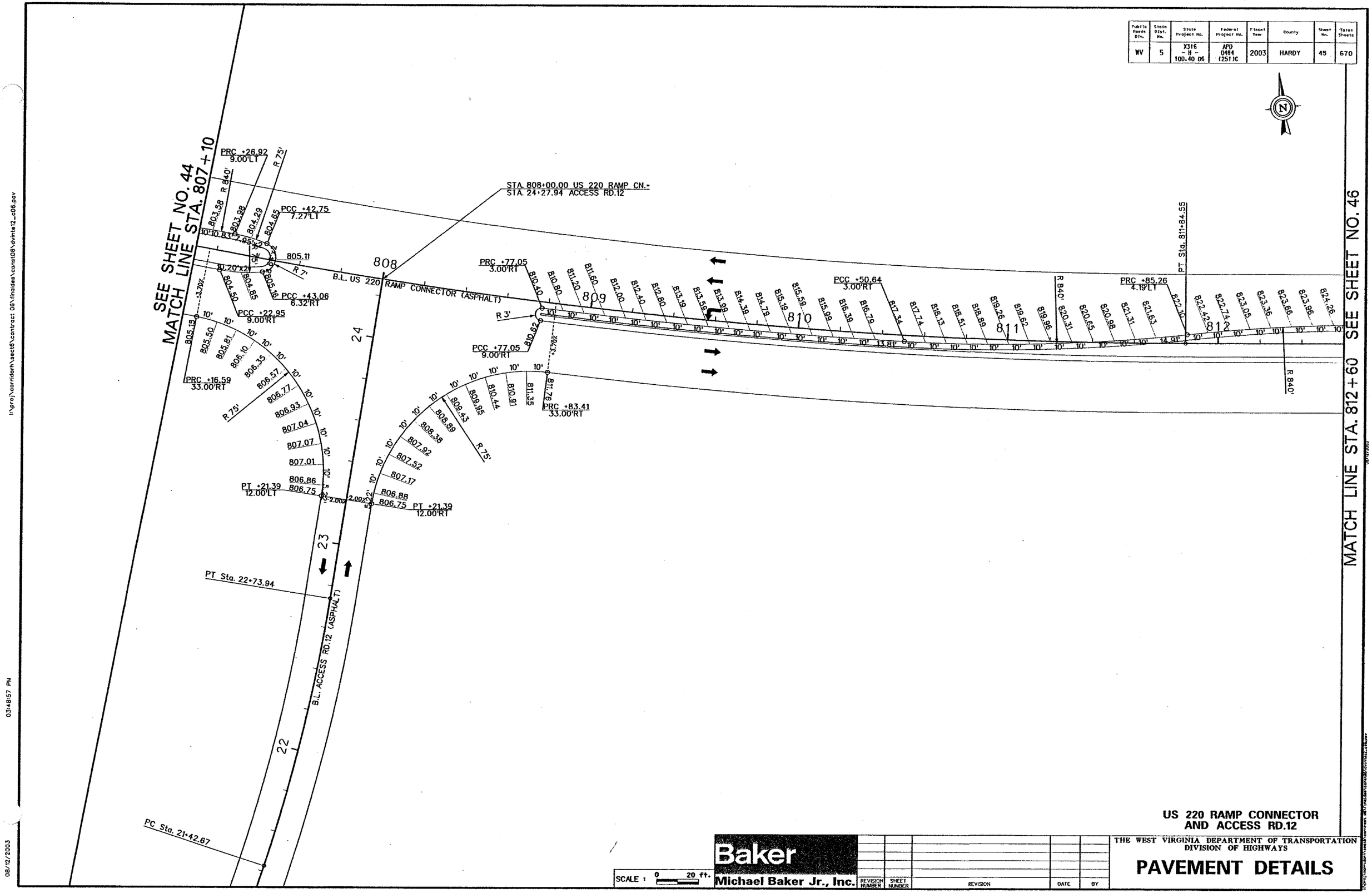

US 220 RAMP CONNECTOR
AND ACCESS RD.12

Baker
Michael Baker Jr., Inc.

REVISION NUMBER	SHEET NUMBER	REVISION	DATE	BY

THE WEST VIRGINIA DEPARTMENT OF TRANSPORTATION
DIVISION OF HIGHWAYS

PAVEMENT DETAILS

08/12/2003 03:48:57 PM

Public Roads Div.	State Dist. No.	State Project No.	Federal Project No.	Fiscal Year	County	Sheet No.	Total Sheets
WV	5	X316 - H - 100.40 06	APD 0484 (251)C	2003	HARDY	46	670

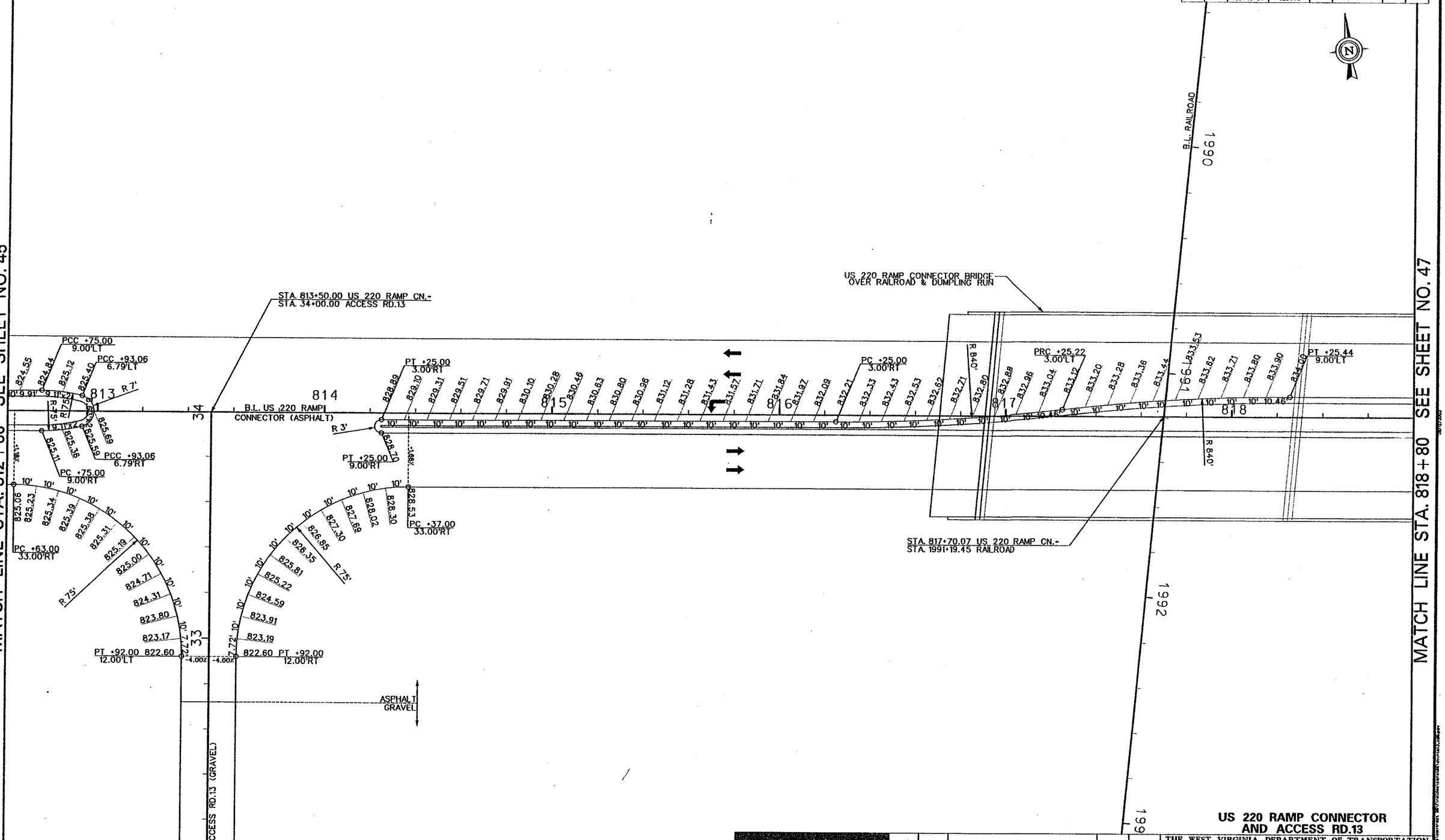

SCALE : 0 20 ft.

Baker
Michael Baker Jr., Inc.

REVISION NUMBER	SHEET NUMBER	REVISION	DATE	BY

THE WEST VIRGINIA DEPARTMENT OF TRANSPORTATION
DIVISION OF HIGHWAYS

US 220 RAMP CONNECTOR
AND ACCESS RD.13

PAVEMENT DETAILS

08/12/2003 03:48:58 PM

Public Roads Div.	State Dist. No.	State Project No.	Federal Project No.	Fiscal Year	County	Sheet No.	Total Sheets
WV	5	X316 - H - 100.40 06	APD 0484 (251)C	2003	HARDY	47	670

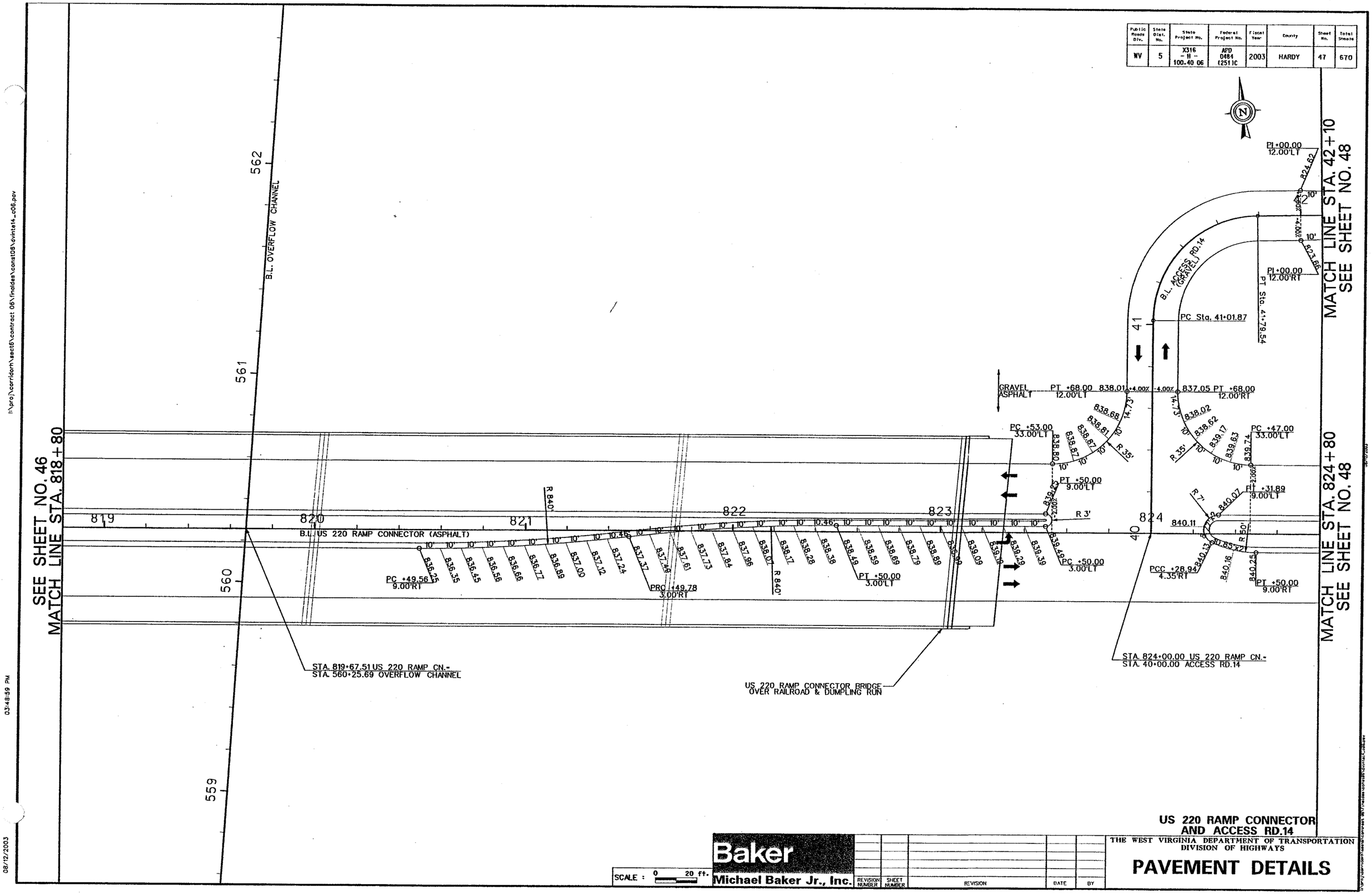

Baker
Michael Baker Jr., Inc.

REVISION NUMBER	SHEET NUMBER	REVISION	DATE	BY

US 220 RAMP CONNECTOR
AND ACCESS RD.14

THE WEST VIRGINIA DEPARTMENT OF TRANSPORTATION
DIVISION OF HIGHWAYS

PAVEMENT DETAILS

I:\proj\corridor\sect6\contract 06\lindlee\const06\dvinta14_c06.pov
03:48:59 PM
08/12/2003

Public Roads Div.	State Dist. No.	State Project No.	Federal Project No.	Fiscal Year	County	Sheet No.	Total Sheets
WV	5	X316 - H - 100.40 06	APD 0484 (251)C	2003	HARDY	48	670

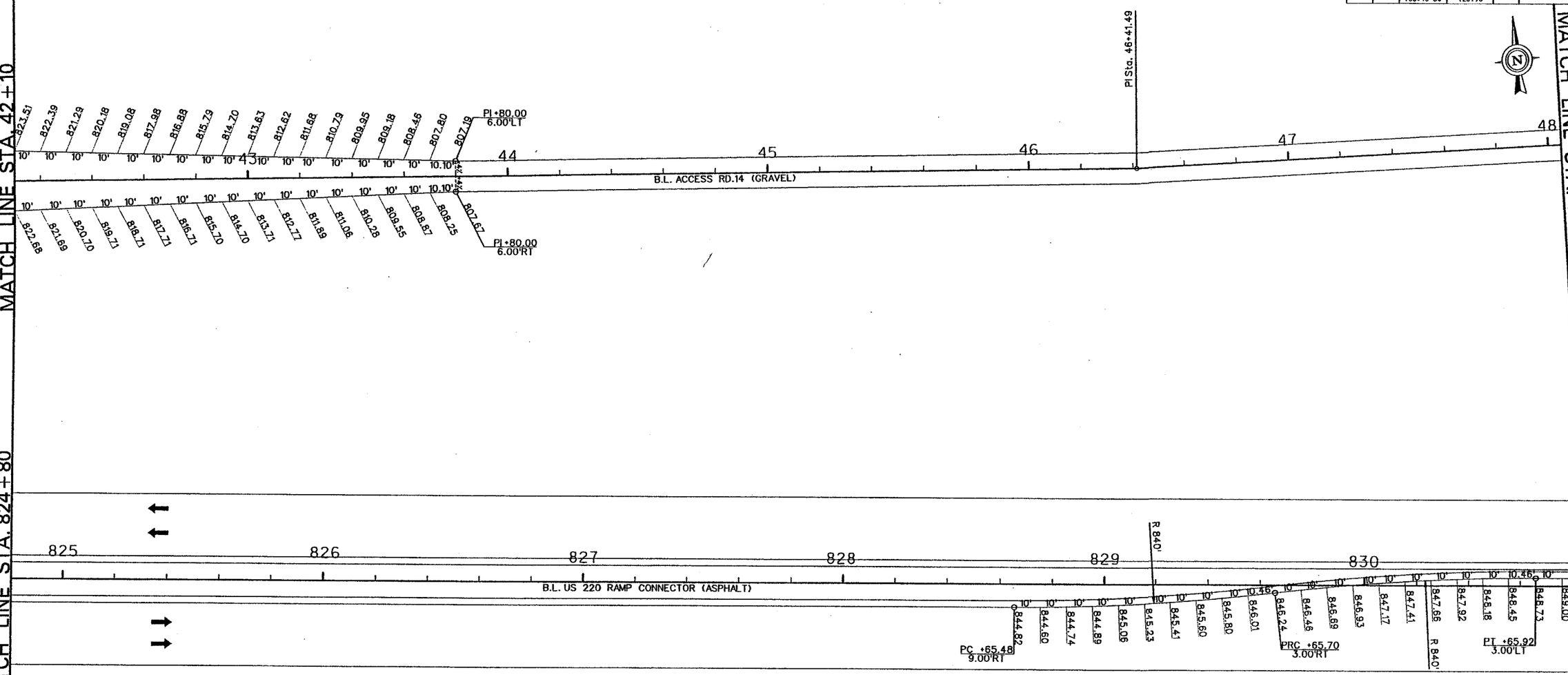

SCALE : 0 20 ft.

Baker
Michael Baker Jr., Inc.

REVISION NUMBER	SHEET NUMBER	REVISION	DATE	BY

US 220 RAMP CONNECTOR
AND ACCESS RD.14

THE WEST VIRGINIA DEPARTMENT OF TRANSPORTATION
DIVISION OF HIGHWAYS

PAVEMENT DETAILS

08/12/2003 03:48:59 PM
p:\proj\corridor\sect5\contract 06\finaldes\const06\dvinte15_c06.pov

Public Roads Div.	State Dist. No.	State Project No.	Federal Project No.	Fiscal Year	County	Sheet No.	Total Sheets
WV	5	X316 - H - 100.40 06	APD 0484 (251)C	2003	HARDY	49	670

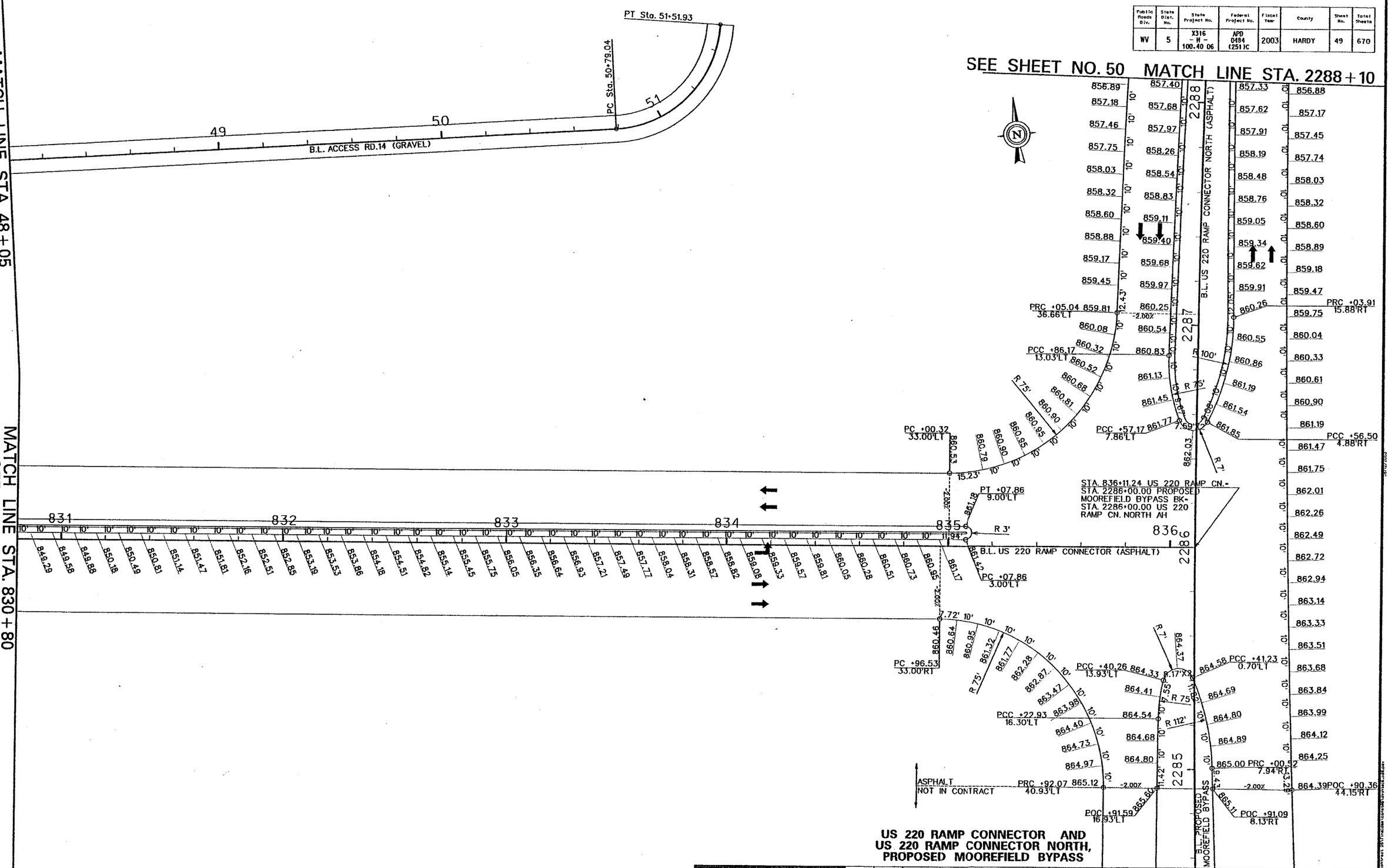

US 220 RAMP CONNECTOR AND
US 220 RAMP CONNECTOR NORTH,
PROPOSED MOOREFIELD BYPASS

Baker
Michael Baker Jr., Inc.

REVISION NUMBER	SHEET NUMBER	REVISION	DATE	BY

THE WEST VIRGINIA DEPARTMENT OF TRANSPORTATION
DIVISION OF HIGHWAYS

PAVEMENT DETAILS

I:\proj\corridorh\sect6\contract 06\finaldes\const06\dvinte15_c06.pov
03:49:00 PM
08/12/2003

Public Roads Div.	State Dist. No.	State Project No.	Federal Project No.	Fiscal Year	County	Sheet No.	Total Sheets
WV	5	X316 -H- 100.40 06	APD 0484 (251)C	2003	HARDY	50	670

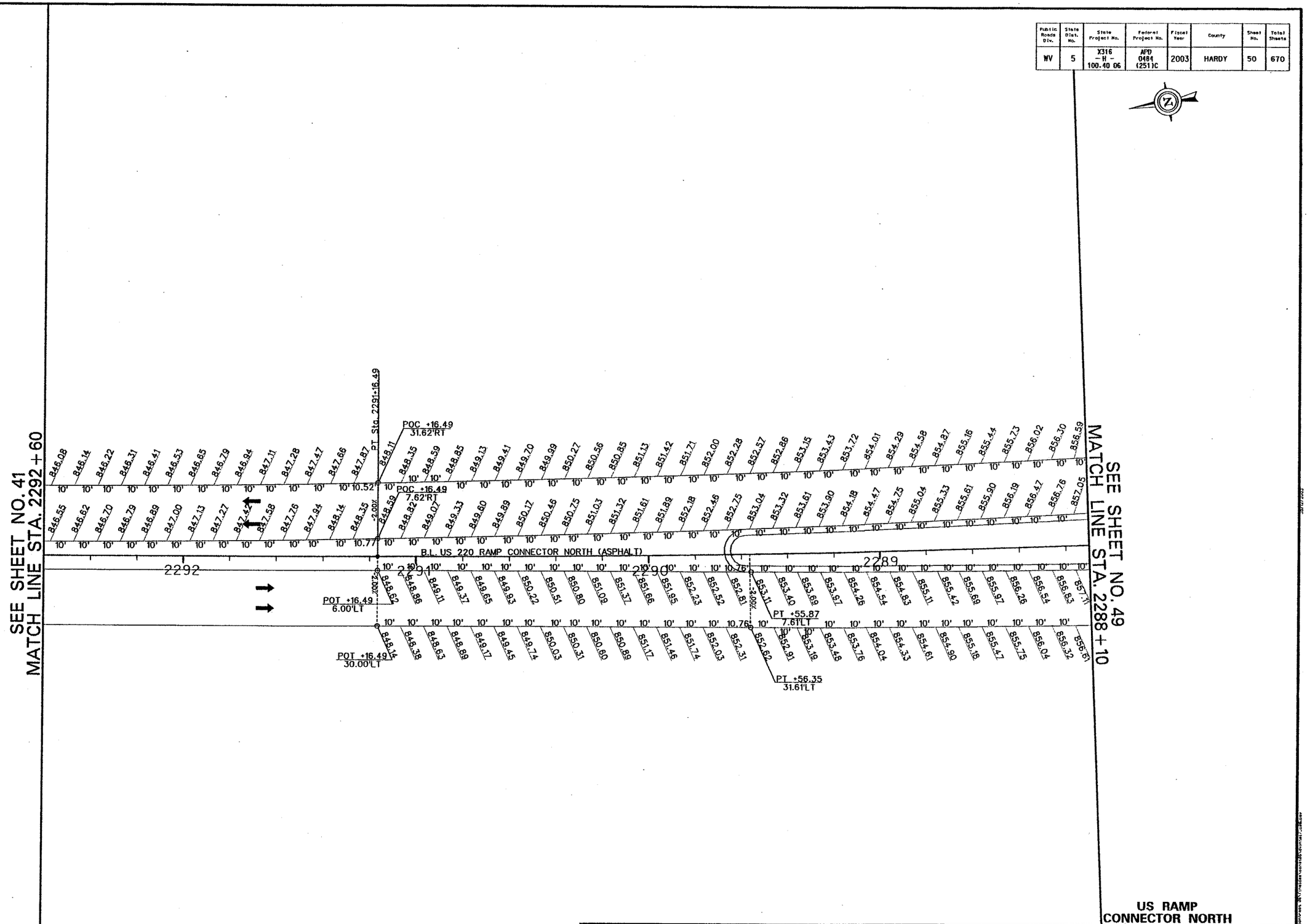

US RAMP
CONNECTOR NORTH

SCALE : 0 20 ft.

Baker
Michael Baker Jr., Inc.

REVISION NUMBER	SHEET NUMBER	REVISION	DATE	BY

THE WEST VIRGINIA DEPARTMENT OF TRANSPORTATION
DIVISION OF HIGHWAYS

PAVEMENT DETAILS

H:\proj\corridor\sect6\contract 06\finaldes\const05\dvinte17_c06.pov

03:49:01 PM

08/12/2003