State Project No.	Federal Project No.	State Dist. No.	Fiscal Year	County	Sheet No.	Total Sheets
X316-H-100.40 06	APD 0484(251)C	5	2003	HARDY	232A	670

NOTE:

THE ARCHITECTURAL TREATMENT SHALL APPROXIMATELY MATCH THE WILLOW-WALL PATTERN SHOWN, AS DETERMINED BY THE ENGINEER. FOR ADDITIONAL REQUIREMENTS, SEE THE BRIDGE PLANS.

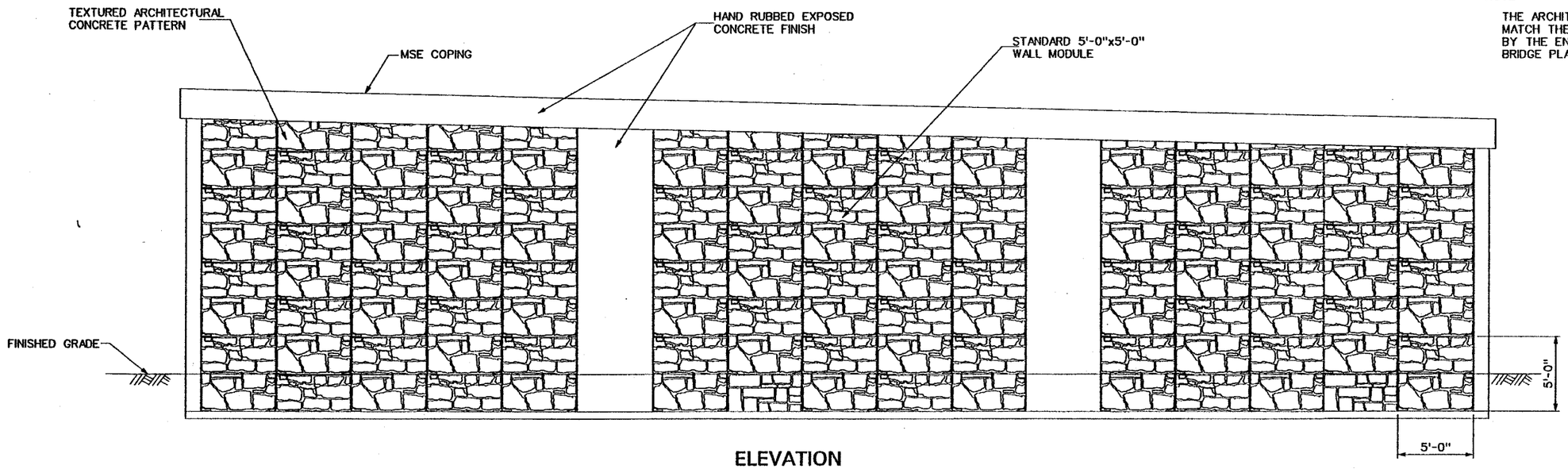

ELEVATION
TYPICAL ARCHITECTURAL TREATMENT FOR MSE WALLS IN FRONT OF ABUTMENT (BRIDGE #10443)

2 0 2 4 FEET

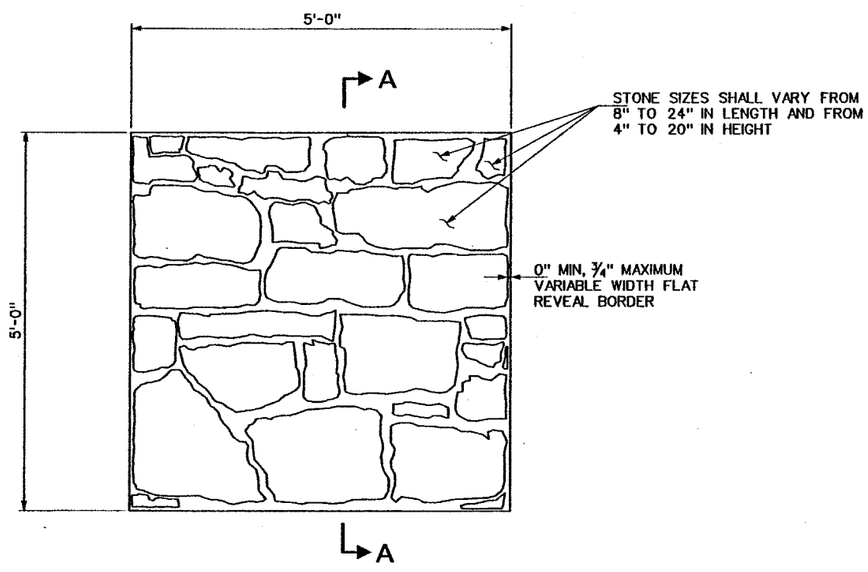

TYPICAL WALL MODULE

6 0 6 12 INCHES

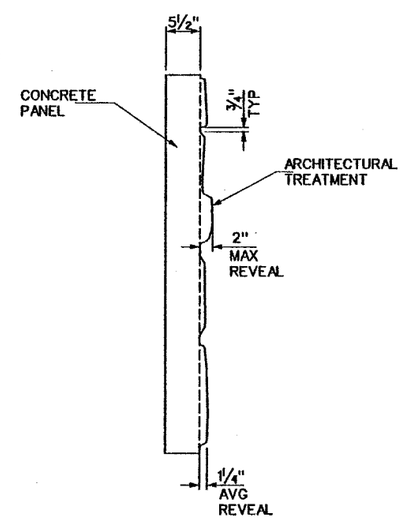

SECTION A–A

6 0 6 12 INCHES

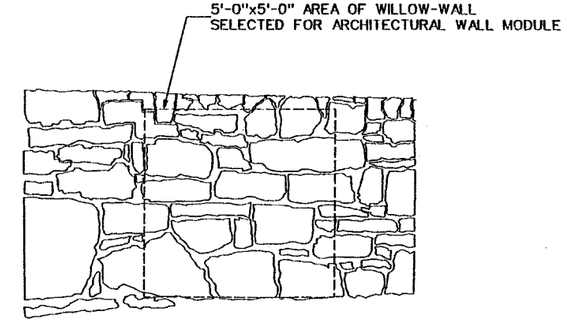

HISTORIC "WILLOW-WALL" IN HARDY COUNTY, WV

1 0 1 2 FEET

NO.	REVISION	DATE:	BY:

W. VA. DEPARTMENT OF TRANSPORTATION
DIVISION OF HIGHWAYS

APPALACHIAN CORRIDOR H
MOOREFIELD DISTRICT
ARCHITECTURAL TREATMENT DETAILS – I

	DATE
DESIGNED JM	08/03
DRAWN jcb	09/03
CHECKED JD	09/03
CHECKED GCR	09/03

Baker
Michael Baker Jr., Inc. Charleston, W.Va.

SHEET 232A OF 670
BRIDGE NO.

09:44:46 AM
09/09/2
c:\dgn\AutoCad\P

State Project No.	Federal Project No.	State Dist. No.	Fiscal Year	County	Sheet No.	Total Sheets
X316-H-100.40 06	APD 0484(251)C	5	2003	HARDY	2328	670

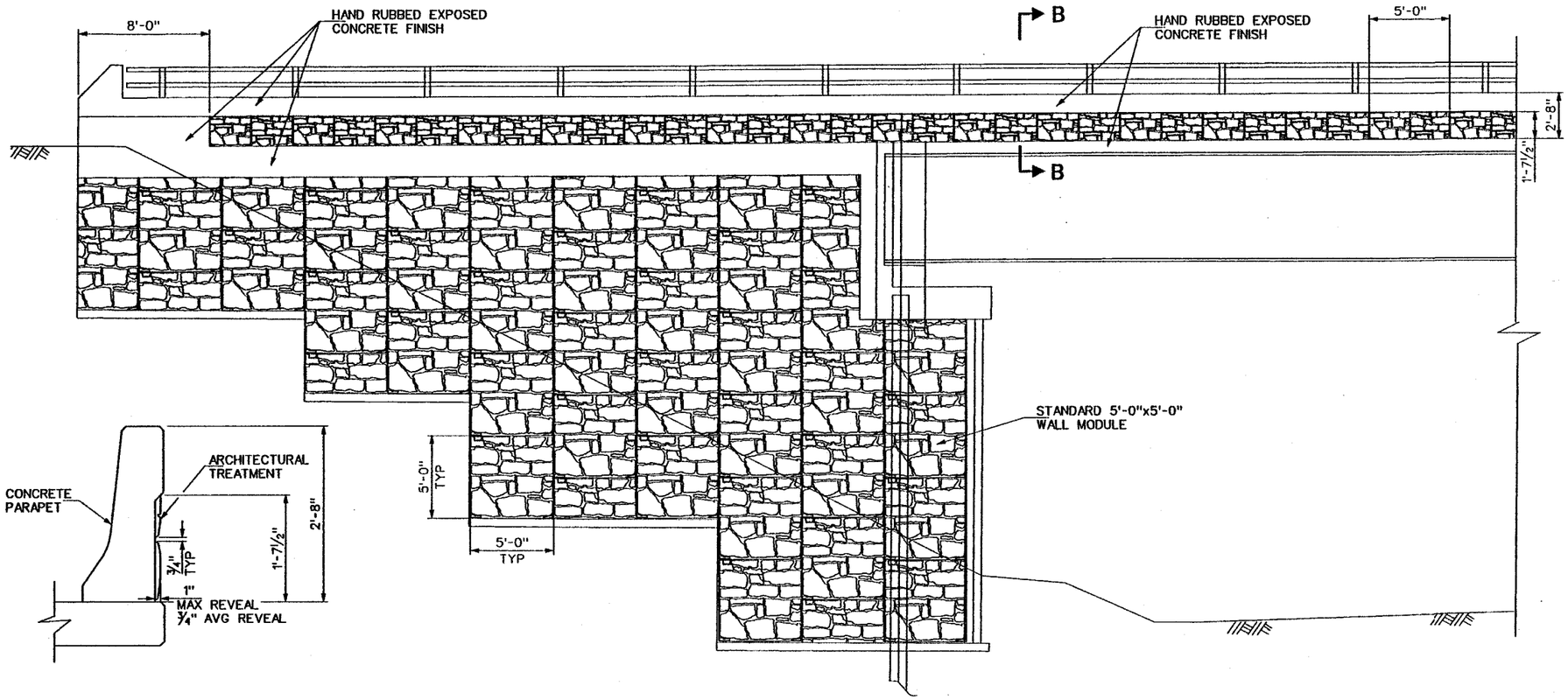

SECTION B–B
6 0 6 12 INCHES

ELEVATION
TYPICAL ARCHITECTURAL TREATMENT FOR MSE WING WALLS
(BRIDGE #10443) AND PARAPETS (BRIDGE #10443, #10444, #10445)
2 0 2 4 FEET

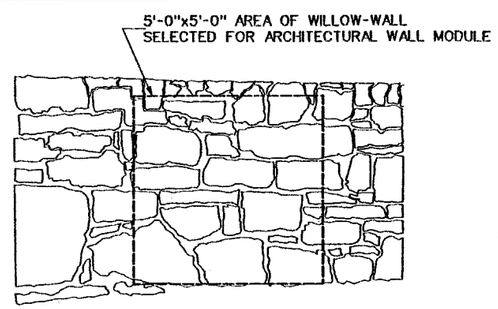

HISTORIC "WILLOW–WALL"
IN HARDY COUNTY, WV
1 0 1 2 FEET

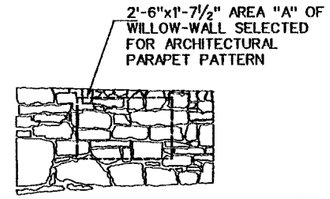

HISTORIC "WILLOW–WALL"
IN HARDY COUNTY, WV
1 0 1 2 FEET

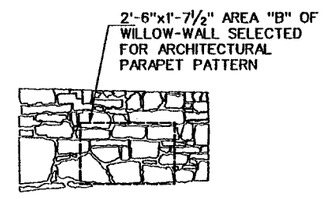

HISTORIC "WILLOW–WALL"
IN HARDY COUNTY, WV
1 0 1 2 FEET

NOTES:
THE ARCHITECTURAL TREATMENT SHALL APPROXIMATELY MATCH THE WILLOW-WALL PATTERN SHOWN, AS DETERMINED BY THE ENGINEER. FOR ADDITIONAL REQUIREMENTS, SEE THE BRIDGE PLANS.

PARAPET PATTERN WAS OBTAINED BY COMBINING WILLOW-WALL PATTERNS "A" AND "B".

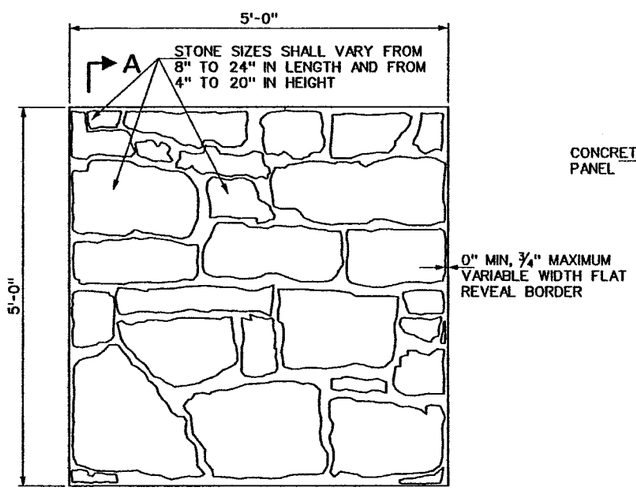

TYPICAL WALL MODULE
A
6 0 6 12 INCHES

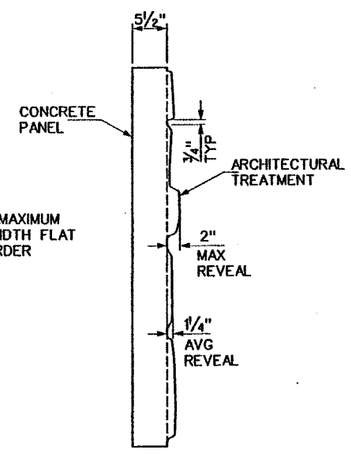

SECTION A–A
6 0 6 12 INCHES

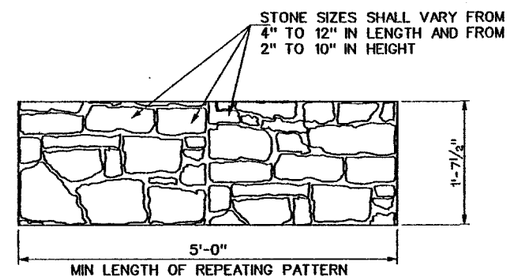

TYPICAL PARAPET PATTERN
6 0 6 12 INCHES

NO.	REVISION	DATE:	BY:

DESIGNED	DATE
JM	08/03
DRAWN jcb	09/03
CHECKED JD	09/03
CHECKED GCR	09/03

W. VA. DEPARTMENT OF TRANSPORTATION
DIVISION OF HIGHWAYS

APPALACHIAN CORRIDOR H
MOOREFIELD DISTRICT
ARCHITECTURAL TREATMENT DETAILS – II

Baker
Michael Baker Jr., Inc. Charleston, W.Va.

SHEET 232B OF 670
BRIDGE NO.

09:44:15 AM
09/09/2C
c:\dgn\AutoCad\pd

PUBLIC ROADS DIV.	STATE RDS. DIV.	STATE PROJ. NO.	FEDERAL PROJ. NO.	FISCAL YEAR	COUNTY	SHEET NO.	TOTAL SHEETS
WV	5	X316 -H- (100.40) 06	APD 0484 (251) C		HARDY	233	670

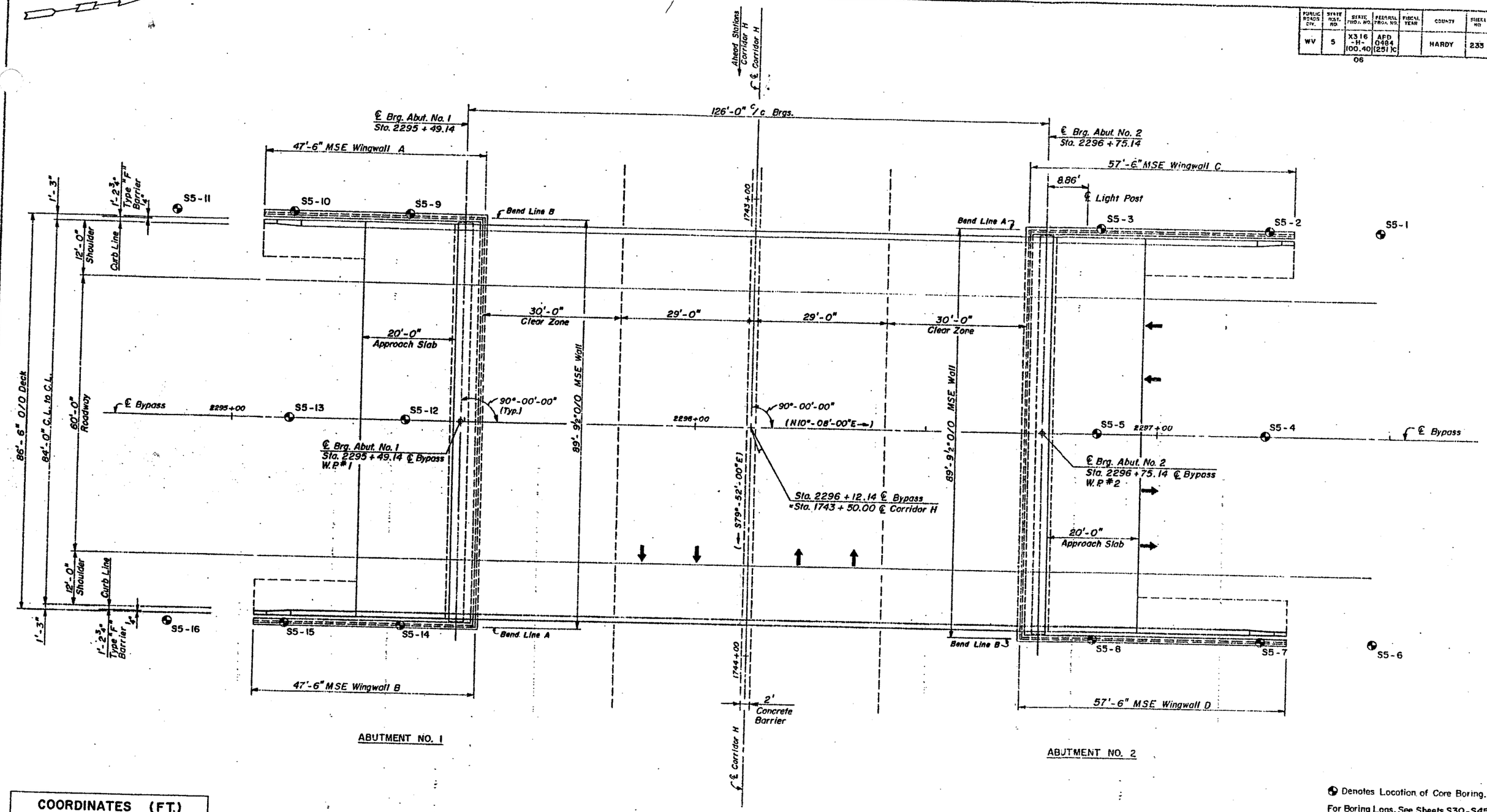

COORDINATES (FT.)		
	NORTHING	EASTING
WP#1	211,063.0341	2,124,042.5047
WP#2	211,187.0686	2,124,064.6731

PLAN

0 10'
Scale

Denotes Location of Core Boring.
For Boring Logs, See Sheets S30-S45

REVISION NUMBER	SHEET NUMBER	REVISIONS	DATE	BY

MOOREFIELD INTERCHANGE BRIDGE

PROJECT NO. X316 - H - 100.40 06 HARDY COUNTY

GENERAL PLAN
BORING LAYOUT

DESIGNED BY	JCG	DRAWN BY	SLN	INKED BY	SLN	DATE	SHEET NO.
CHECKED BY	WJR	CHECKED BY	JD	CHECKED BY	JD WJR	SCALE AS NOTED	S1 of S45

JOHN C. GIESE ENGINEERS, INC.
CONSULTING ENGINEERS CLARKSBURG, W. VA.

10443

PUBLIC ROADS DIV.	STATE DIST. NO.	STATE PROJ. NO.	FEDERAL PROJ. NO.	FISCAL YEAR	COUNTY	SHEET NO.	TOTAL SHEETS
WV	5	X316 -H- 100.40 06	APD 0484 (251)C		HARDY	234	670

NOTE FOR EXCAVATION

All excavation to the 2:1 slope shown at each abutment and for the roadway between MSE Walls in front of the abutments is included in Roadway Item 207001-001, Unclassified Excavation.

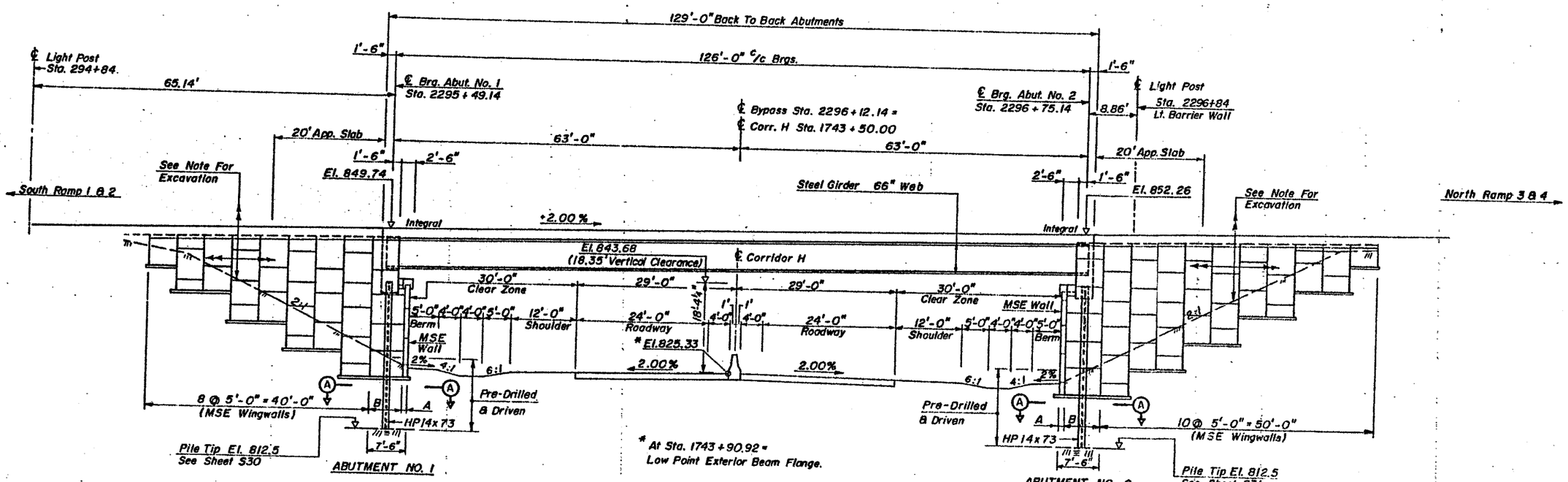

* At Sta. 1743 + 90.92 = Low Point Exterior Beam Flange.

A = Varies 1'-0" ± to 2'-0" ±
B = Varies 6'-6" ± to 5'-6" ±

PROFILE ALONG ℄ BRIDGE
N.T.S.

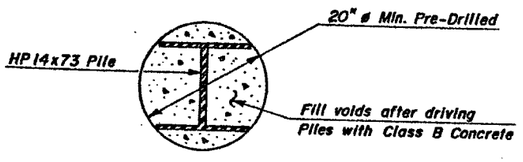

SECTION A-A
Scale: 1" = 1'-0"

REVISION NUMBER	SHEET NUMBER	REVISIONS	DATE	BY

MOOREFIELD INTERCHANGE BRIDGE

PROJECT NO. X316 - H - 100.40 06 HARDY COUNTY

PROFILE

DESIGNED BY	JCG	DRAWN BY	JD	INKED BY	ALS JD	DATE	SHEET NO
CHECKED BY	WJR	CHECKED BY	WJR	CHECKED BY	WJR	SCALE NONE	S2 of S45

JOHN C. GIESE ENGINEERS, INC.
CONSULTING ENGINEERS CLARKSBURG, W. VA.

10443

GENERAL NOTES

GOVERNING SPECIFICATIONS

THE WEST VIRGINIA DEPARTMENT OF TRANSPORTATION, DIVISION OF HIGHWAYS, STANDARD SPECIFICATIONS, ROADS AND BRIDGES, ADOPTED 2000, AND THE WEST VIRGINIA DEPARTMENT OF TRANSPORTATION, DIVISION OF HIGHWAYS SUPPLEMENTAL SPECIFICATIONS ISSUED JANUARY 1, 2003. THE CONTRACT PLANS, AND THE CONTRACT DOCUMENTS ARE THE GOVERNING PROVISIONS APPLICABLE TO THIS PROJECT.

DESIGN

THE BRIDGE DESIGN IS IN ACCORDANCE WITH THE AASHTO LRFD BRIDGE DESIGN SPECIFICATIONS, CUSTOMARY U. S. UNITS, SECOND EDITION, 1998, INCLUDING 1999, 2000, 2001, 2002 AND 2003 INTERIM SPECIFICATIONS.

THE STRUCTURE HAS BEEN DESIGNED FOR A LIVE LOAD CAPACITY OF 7 LANES OF HL-93 VEHICULAR LOAD.

THE DESIGN PROVIDES FOR PERMANENT METAL DECK FORMS (15 PSF INCLUDING CONCRETE) AND A FUTURE WEARING SURFACE ON THE ROADWAY (25 PSF). THE ADDITION WEARING SURFACE IS NOT INCLUDED IN THIS CONTRACT. PERMANENT METAL DECK FORMS ARE TO BE DESIGNED BY THE CONTRACTOR IN ACCORDANCE WITH THE SUPPLEMENTAL SPECIFICATIONS.

THE STRUCTURE IS DESIGNED FOR SEISMIC PERFORMANCE CATEGORY A.

NO ANALYSIS FOR REDECKING OF THE BRIDGE HAS BEEN CONDUCTED.

THE DECK SLAB HAS BEEN DESIGNED IN ACCORDANCE WITH THE EMPIRAL DESIGN PROCESS INCLUDED IN THE AASHTO LRFD BRIDGE DESIGN SPECIFICATIONS, SECOND EDITION, DATED 1998, INCLUDING 1999, 2000, 2001, 2002 AND 2003 INTERIM SPECIFICATIONS.

THE SUPERSTRUCTURE HAS BEEN DESIGNED AS A COMPOSITE SECTION FOR THE FULL LENGTH OF THE BRIDGE 1/4" OF CONCRETE DECK SLAB THICKNESS HAS BEEN REMOVED FROM SECTION PROPERTIES FOR DESIGN TO PROVIDE FOR GRINDING, GROOVING AND SACRIFICIAL SURFACE.

DESIGN UNIT STRESSES

CONCRETE: CLASS "B" CONCRETE F'C = 3,000 P.S.I. FC = 1,200 P.S.I. N = 9
CLASS "H" CONCRETE F'C = 4,000 P.S.I. FC = 1,200 P.S.I. N = 8
CLASS "H" CONCRETE, ARCHITECTURAL F'C = 4,000 P.S.I. FC = 1,200 P.S.I. N = 8

REINFORCING STEEL: ALL UNITS DESIGNED FOR GRADE 60 FS = 20,000 P.S.I.
STRUCTURAL STEEL: AASHTO M270 GRADE 50W FY = 50,000 P.S.I.

REINFORCING STEEL

ALL REINFORCING STEEL BARS SHALL BE INTERMEDIATE GRADE BILLET STEEL IN ACCORDANCE WITH AASHTO M31, GRADE 60.

ALL REINFORCING STEEL BARS SHALL BE COATED WITH EPOXY IN ACCORDANCE WITH THE SPECIFICATIONS. PAYMENT WILL BE MADE UNDER ITEM 602002-001, EPOXY COATED REINFORCING STEEL BARS.

THE CLEAR DISTANCE BETWEEN REINFORCING STEEL AND THE FACE OF CONCRETE SHALL BE AS FOLLOWS UNLESS OTHERWISE SHOWN ON THE DRAWINGS:

TOP OF SLAB	=	2 1/2"
BOTTOM OF SLAB	=	1"
BOTTOM OF FOOTINGS	=	3"
ALL OTHER LOCATIONS	=	2"

CONCRETE

CONCRETE FOR BRIDGE DECK AND UPPER POUR AT ABUTMENTS, SHALL BE CLASS H.

CONCRETE FOR BARRIERS ON BRIDGE DECK, UPPER POUR OF APPROACH ROADWAY BARRIERS, BARRIERS ON APPROACH SLABS AND LIGHT POLE BLISTER SHALL BE CLASS H, ARCHITECTURAL.

CONCRETE FOR THE LOWER POUR AT ABUTMENTS AND THE LOWER POUR OF APPROACH ROADWAY BARRIERS SHALL BE CLASS B.

THE EXPOSED SURFACES OF THE ABUTMENTS AND ALL SURFACES OF THE BARRIERS ON THE BRIDGE DECK, ON THE APPROACH SLABS AND ON THE APPROACH ROADWAY BARRIERS WHICH DO NOT HAVE ARCHITECTURAL TREATMENT SHALL BE CLASS 2, RUBBED FINISH IN ACCORDANCE WITH SUBSECTION 601.11.2 OF THE STANDARD SPECIFICATIONS. THE BRIDGE DECK SHALL BE FINISHED IN ACCORDANCE WITH SUBSECTION 601.11.4 OF THE STANDARD SPECIFICATIONS.

ADDITION OF EXTRA BAG OF CEMENT IN ORDER TO ACHIEVE HIGH EARLY STRENGTH AND REDUCE THE 7-DAY WET CURE SHALL NOT BE PERMITTED FOR ALL CLASSES OF CONCRETE.

ALL CONCRETE SHALL RECEIVE A SEVEN DAY WET CURE

CHAMFER ALL EXPOSED EDGES OF CONCRETE ON SUPERSTRUCTURE 3/4" BY 3/4" UNLESS OTHERWISE NOTED, ON SUBSTRUCTURE 1" BY 1" UNLESS OTHERWISE NOTED.

A WATER-REDUCING AND RETARDING ADMIXTURE IN ACCORDANCE WITH THE SPECIAL PROVISIONS AND 707 2 OF THE STANDARD SPECIFICATIONS SHALL BE USED IN ALL DECK CONCRETE. PAYMENT SHALL BE INCLUDED IN THE BID PRICE FOR ITEM 601009-001, CLASS H CONCRETE. RETARDER WILL NOT BE REQUIRED BELOW 50° F. THE CONTRACTOR'S ATTENTION IS CALLED TO THE TEST REQUIREMENTS FOR THE RETARDER ADMIXTURE.

PERMANENT METAL DECK FORMS SHALL BE USED IN PLACING THE DECK CONCRETE IN ACCORDANCE WITH SECTION 601. THE AREA OF THE PERMANENT METAL DECK FORMS IS 8,323 S.F.

DECK SLAB OVERHANG FORMS SHALL BE SUPPORTED FROM THE BOTTOM FLANGE OF FASCIA GIRDERS OR STRINGERS. THE CONTRACTOR SHALL SUBMIT FORMING PLANS AND SUPPORTING CALCULATIONS FOR THE OVERHANG TO THE ENGINEER FOR REVIEW PRIOR TO ERECTING THE FORMWORK. DESIGN OF FORMING AND FALSEWORK SHALL BE BY A PROFESSIONAL ENGINEER REGISTERED IN THE STATE OF WEST VIRGINIA, WHO SHALL ALSO VERIFY THAT THE DESIGN IS UTILIZED.

FORM SYSTEMS THAT WILL CAUSE OVERSTRESS OR DEFORMATION TO PERMANENT BRIDGE MEMBERS SHALL NOT BE PERMITTED. THE CONTRACTOR SHALL SUBMIT CALCULATIONS VERIFYING THAT THIS REQUIREMENT IS SATISFIED

CONCRETE FORMING SHALL BE IN ACCORDANCE WITH SECTION 601.8.

NO SLIP-FORMING OF PARAPETS WILL BE PERMITTED.

STRUCTURAL STEEL

THE LUMP SUM BID FOR ITEM 615001-001, STEEL SUPERSTRUCTURE, SHALL INCLUDE ALL STRUCTURAL STEEL COMPLETE IN PLACE INCLUDING FASTENERS, ELASTOMERIC BEARING PADS AND PAINTING.

ALL STRUCTURAL STEEL FOR GIRDER FLANGES, WEB AND SPLICE PLATES SHALL MEET AASHTO M270 GRADE 50W-T2. ALL OTHER STRUCTURAL STEEL SHALL CONFORM TO AASHTO M270 GRADE 50W.

NO FIELD WELDING WILL BE PERMITTED UNLESS SHOWN ON THE PLANS OR APPROVED BY THE ENGINEER.

ALL WELDING SHALL CONFORM TO THE BRIDGE WELDING CODE ANSI/AASHTO/AWS D1.5, 2002.

DO NOT USE THE ELECTROSLAG OR ELECTORGAS WELDING PROCESS.

BOLTS

ALL FASTENERS SHALL BE 7/8" ϕ AASHTO M164 HIGH STRENGTH BOLTS, UNLESS OTHERWISE NOTED ON THE PLANS. THE THREADED ENDS OF BOLTS ARE TO BE PLACED ON THE INSIDE WHERE PRACTICABLE TO PROTECT SAME FROM THE WEATHER.

DIAMETER OF HOLES SHALL BE 1/16" LARGER THAN NORMAL DIAMETER OF FASTENERS.

HIGH STRENGTH FASTENERS SHALL MEET SECTION 709 24 AND SHALL BE BLACK (UNCOATED) TYPE 3 (WEATHERING STEEL). HIGH STRENGTH FASTENERS TO BE USED IN AREAS OF THE STRUCTURE WHICH REQUIRES PAINTING SHALL BE TYPE 1 OR 3 AND SHALL BE MECHANICAL GALVANIZED IN ACCORDANCE WITH AASHTO M238.

PRIOR TO ASSEMBLING HIGH STRENGTH BOLTED CONNECTIONS, ALL LOOSE AND NON-ADHERENT RUST WHICH MAY HAVE FORMED ON THE CONNECTION AREAS SHALL BE REMOVED BY HAND OR POWER WIRE BRUSHING.

WELDED STUD SHEAR CONNECTORS

ALL WELDED STUD SHEAR CONNECTORS SHALL CONFORM TO THE REQUIREMENTS OF SECTION 615.3.3 OF THE STANDARD SPECIFICATIONS. THE CONNECTORS SHALL BE ATTACHED IN THE FIELD. NO SHOP INSTALLATION OF WELDED STUD SHEAR CONNECTORS SHALL BE PERMITTED. THE FIELD INSTALLATION OF THE CONNECTORS SHALL NOT COMMENCE PRIOR TO THE INSTALLATION OF DECK FORMS IN THE AREA SURROUNDING THE STUDS. EXTERIOR DECK OVERHANG FORMS MAY BE INSTALLED AFTER THE WELDED STUD SHEAR CONNECTORS. THE SHEAR CONNECTORS AND DECK FORMS SHALL BE INSTALLED IN A SEQUENCE THAT PERMITS WORKERS ACCESS THROUGH THE DECK AREA WITHOUT WALKING THROUGH INSTALLED CONNECTORS

PILING

ALL PILES HAVE BEEN DESIGNED FOR A GEOTECHNICAL STRENGTH LIMIT CAPACITY OF 215 TONS.

ALL PILING IN THE ABUTMENTS SHALL BE PRE-DRILLED TO PLAN PILE TIP ELEVATION AND DRIVEN TO REFUSAL INTO THE FOUNDATION STRATA AS INDICATED BY THE PILE TIP ELEVATION. THE PILES SHALL BE INSTALLED PRIOR TO THE CONSTRUCTION OF THE REINFORCED SOIL ZONE FOR THE MSE WALLS.

REFUSAL IS DEFINED AS THE EQUIVALENT OF 20 BLOWS FOR 1-INCH OR LESS OF PENETRATION WITH A POWER HAMMER DEVELOPING A MINIMUM CAPACITY OF 15,000 FOOT POUNDS PER BLOW. IF A LARGER HAMMER IS USED THE NUMBER OF BLOWS IN THE LAST INCH OF PENETRATION MAY BE REDUCED IN DIRECT PROPORTION TO THE ENERGY RATING OF THE HAMMER, BUT TO NO LESS THAT 12.

BEFORE PILE DRIVING IS STARTED, THE CONTRACTOR SHALL PROVIDE A WRITTEN CERTIFICATION TO THE ENGINEER THAT THE PILE HAMMER, AIR COMPRESSORS AND AIR VALVES HAVE BEEN INSPECTED AND FOUND TO BE IN GOOD WORKING CONDITION.

NEW STOCK MATERIAL MAY BE USED FOR STEEL BEARING PILES PROVIDED THAT EACH PIECE CAN BE IDENTIFIED BY HEAT NUMBER AND PROVIDED THAT CERTIFIED MILL REPORTS ARE FURNISHED TO STATE'S SHOP INSPECTOR FOR EACH HEAT REPRESENTED, INDICATING THAT THE MATERIAL CONFORMS TO THE SPECIFICATIONS

ALL PILES SHOWN IN PLANS SHALL CONFORM TO AASHTO M270 GRADE 50.

PRE-DRILLED HOLES FOR PILES

THE PRE-DRILLED HOLES FOR PILES SHALL BE A MINIMUM DIAMETER OF 20 INCHES (100% OF THE DIAGONAL DIMENSION OF THE PILE SECTION). CONTRACTOR'S ATTENTION IS DIRECTED TO THE QUALITY OF THE ROCK AT THE ABUTMENTS AND THE NEED TO PRE-DRILL THE PILES TO THE INDICATED ELEVATIONS. ALL VOIDS REMAINING AFTER THE DRIVING OPERATION SHALL BE FILLED WITH CLASS B CONCRETE. CONCRETE SHALL BE PLACED IN THE DRY.

THERE IS NO SEPARATE PAYMENT FOR FURNISHING AND PLACING THE CLASS B CONCRETE AND ALL COSTS SHALL BE INCLUDED IN THE UNIT PRICE BID FOR ITEM 618005-018, HP 14X73 STEEL BEARING PILES, PRE-DRILLED AND DRIVEN.

JOINT FILLER

PREFORMED JOINT FILLER AT THE LOCATIONS SHOWN ON THE PLANS SHALL BE SPONGE RUBBER IN ACCORDANCE WITH SECTION 708.1.1 OF THE STANDARD SPECIFICATIONS. THERE IS NO SEPARATE PAYMENT FOR FURNISHING AND INSTALLING THE PREFORMED JOINT FILLER AND ALL COSTS SHALL BE INCLUDED IN THE UNIT PRICE BID FOR ITEM 601009-001, CLASS H CONCRETE, PER CUBIC YARD.

SILICONE MATERIAL AT EXPANSION JOINTS IN BARRIERS AS SHOWN ON THE PLANS SHALL BE IN ACCORDANCE WITH THE SPECIAL PROVISIONS FOR SECTION 627 OF THE STANDARD SPECIFICATIONS. PAYMENT SHALL BE MADE AT THE UNIT PRICE BID FOR ITEM 627017-001, INSTALL SILICONE EXPANSION JOINT SYSTEM, PER LINEAR FOOT.

BEARING AREAS

BRIDGE SEATS ON ABUTMENTS SHALL BE FINISHED TO TRUE PLANE, ELEVATIONS AND GRADE AS SHOWN ON THE PLANS.

BACKFILL

THE CONTRACTOR SHALL BACKFILL AROUND THE SUBSTRUCTURE AS SOON AS POSSIBLE AFTER REMOVAL OF FORMS AND FALSEWORK AND SLOPE SURFACES TO DRAIN.

ARCHITECTURAL TREATMENT

ARCHITECTURAL TREATMENT TO COMPLY WITH THE REQUIREMENTS OF SECTION 601.6.10 OF THE STANDARD SPECIFICATIONS. NO PURCHASING OF PRODUCTION FORMLINER FOR ALL ARCHITECTURAL TREATMENT SHALL TAKE PLACE WITHOUT WRITTEN APPROVAL OF THE ENGINEER. ALL FORMLINERS SHALL BE FROM THE SAME FORMLINER MANUFACTURER AND SAMPLE PANELS SHALL BE SUBMITTED TO THE ENGINEER FOR APPROVAL AT THE SAME TIME.

ALUMINIUM RAILING

ALUMINIUM RAILING, POSTS AND BASE PLATES SHALL HAVE ANODIZED COLORING TO MATCH WEATHERING STEEL COLOR.

BRIDGE PLATE

INSTALL A NEW BRIDGE PLATE ON THE ROADWAY FACE OF THE RIGHT PARAPET AT ABUTMENT 1 AS DIRECTED BY THE ENGINEER.

GEOTECHNICAL INFORMATION

THE GEOTECHNICAL AND FOUNDATION DESIGNS ARE BASED ON BORINGS DRILLED AND THE SUBSURFACE INVESTIGATION REPORT PREPARED BY H. C. NUTTING, CO. THIS REPORT INCLUDES THE ENGINEERING LOGS AS COMPILED BY FIELD DATA. THE FIELD LOGS AND REPORT ARE AVAILABLE FOR REVIEW DURING NORMAL BUSINESS HOURS AT H C. NUTTING, CO., 912 MORRIS STREET, CHARLESTON, WV. 25301 (304-344-0821). EACH BIDDER IS RESPONSIBLE FOR REVIEWING THESE MATERIALS, AND IS PRESUMED TO HAVE CONSIDERED THESE MATERIALS IN THEIR BID PREPARATION.

SHOP DRAWINGS

ALL SHOP DRAWINGS WILL BE SUBJECT TO THE REQUIREMENTS OF SECTION 105.2 SUBMIT SHOP DRAWINGS TO:

JOHN C. GIESE ENGINEERS, INC.
752 WEST PIKE STREET
CLARKSBURG, WEST VIRGINIA 26302

THE DESIGN CALCULATIONS AND PLANS FOR ANY PROPOSED FALSEWORK, COFFERDAMS, SHEETING, OR OTHER TEMPORARY SUPPORTS OR BRACING REQUIRED TO CONSTRUCT THE STRUCTURE SHALL BE SIGNED AND SEALED BY A PROFESSIONAL ENGINEER REGISTERED IN THE STATE OF WEST VIRGINIA BEFORE BEING SUBMITTED TO THE ENGINEER FOR REVIEW.

LIST OF SPECIAL PROVISIONS:

1. STRUCTURAL CONCRETE CLASS H BRIDGE DECKS
2. INSTALL SILICONE EXPANSION JOINT SYSTEM

ARCHITECTURAL TREATMENT

FOR ARCHITECTURAL TREATMENT DETAILS, SEE SHEET 232 A & 232 B.

FOR CONTINUATION OF GENERAL NOTES; SEE SHEET S4

REVISIONS

MOOREFIELD INTERCHANGE BRIDGE

PROJECT NO. X316-H-100.40 06 HARDY COUNTY

GENERAL NOTES

DESIGNED BY JCG | DRAWN BY | CHECKED BY | CHECKED BY PAM | DATE | SCALE NONE

JOHN C. GIESE ENGINEERS, INC.
CONSULTING ENGINEERS CLARKSBURG, W. VA.

10443

PUBLIC ROADS DIV.	STATE DIST. NO.	STATE PROJ. NO.	FEDERAL PROJ. NO.	FISCAL YEAR	COUNTY	SHEET NO.	TOTAL SHEETS
WV	5	X316 -H- 100.40 06	APD 0484 (251)C		HARDY	236	670

BLAST CLEANING AND PAINTING

UPON COMPLETION OF ALL FABRICATION OPERATIONS IN THE SHOP, AND PRIOR TO SHIPMENT TO THE PROJECT SITE, ALL WEATHERING STEEL BRIDGE COMPONENTS SHALL BE BLAST CLEANED TO A NEAR WHITE SURFACE CONDITION IN ACCORDANCE WITH SSPC-SP 10. PRIOR TO THE START OF ANY BLAST CLEANING, ALL OIL, GREASE, CUTTING FLUIDS OR OTHER FOREIGN MATTER SHALL BE REMOVED FROM THE SURFACES OF THE STEEL BY SOLVENT CLEANING IN ACCORDANCE WITH SSPC-SP 1.

THE ENDS OF THE GIRDERS AND ALL OTHER STRUCTURAL COMPONENTS THAT WILL BE ENCASED IN THE CONCRETE ABUTMENTS PLUS ONE ADDITIONAL FOOT IN LENGTH SHALL BE BLAST CLEANED AND SHOP PAINTED IN ACCORDANCE WITH SECTION 688 USING THE ZINC RICH LOW VOC SYSTEM. SECTION 711.22. THE FULL PAINT SYSTEM SHALL BE APPLIED IN THE FABRICATION SHOP, EXCEPT FOR FAYING SURFACES OF HIGH-STRENGTH BOLTED CONNECTIONS, WHICH SHALL BE SHOP PAINTED WITH PRIMER ONLY. THE COLOR OF THE FINAL TOP COAT SHALL BE 30045 IN ACCORDANCE WITH FEDERAL STANDARD 595 AND THE GLOSS @ 60 DEGREES SHALL NOT EXCEED 25.

AREAS OF THE SHOP-APPLIED PAINT SYSTEM WHICH ARE DAMAGED DURING ERECTION AND HIGH-STRENGTH BOLTED CONNECTION AREAS THAT WERE PRIME PAINTED ONLY SHALL BE PROPERLY CLEANED AND PAINTED IN ACCORDANCE WITH SECTION 688 AND TO THE SATISFACTION OF THE ENGINEER. AFTER COMPLETION OF ALL TIGHTENING OPERATIONS, MECHANICAL GALVANIZED FASTENERS SHALL BE SOLVENT CLEANED AND FIELD PAINTED AS SPECIFIED FOR THE STRUCTURAL STEEL.

CLEANING AND PAINTING COSTS SHALL BE INCLUDED IN ITEM 615001-001, STEEL SUPERSTRUCTURE.

THE CREVICE BETWEEN THE EMBEDDED STEEL AND THE CONCRETE SHALL BE SUITABLY CHAMFERED TO PROVIDE FOR PLACEMENT OF A SEALANT. THE CREVICE SHALL BE SEALED WITH A SEALANT MATERIAL MEETING THE REQUIREMENTS OF ASTM C920/C920M, TYPE S, GRADE NS, CLASS 25, USES NT AND M. SEALANT SHALL BE SUITABLE FOR BONDING BETWEEN CONCRETE AND THE TOP COAT OF THE SPECIFIED PAINT SYSTEM. ACID-CURE SEALANTS ARE NOT ALLOWED. PAYMENT TO BE INCLUDED IN ITEM 615001-001, STEEL SUPERSTRUCTURE.

IDENTIFICATION MARKING STEEL MEMBERS

STEEL MILL AND FABRICATOR IDENTIFICATION MARKINGS FOR STEEL PLATES AND SHAPES OR FABRICATED MEMBERS SHALL BE BY METAL TAGS, SOAPSTONE OR SOME OTHER READILY REMOVABLE MATERIAL, OR, SHALL BE MARKED IN AN AREA OF THE COMPLETED MEMBER WHICH WILL BE ENCASED OR COVERED WITH CONCRETE. MARKING METHODS AND LOCATIONS ARE SUBJECT TO APPROVAL OF THE ENGINEER.

PAINT OR WAX-BASED CRAYONS SHALL NOT BE USED FOR MARKING.

HANDLING AND STORING STEEL MEMBERS

STEEL MEMBERS MUST NOT BE GOUGED, SCRATCHED, DENTED OR ALLOWED TO RUB AGAINST OTHER MEMBERS WHICH WOULD RESULT IN DAMAGE TO THE BLAST CLEANED PROFILE OF THE STEEL. MEMBERS SHALL BE HANDLED USING SOFTENERS AND SLINGS INSTEAD OF CHOKERS AND CHAINS.

MEMBERS SHALL BE STORED IN THE FABRICATION SHOP AND ON THE PROJECT SITE IN SUCH A MANNER AS TO BE KEPT FREE AND CLEAN OF ALL FOREIGN SUBSTANCES SUCH AS GREASE, OIL, MORTAR AND CONCRETE, SPLATTER, CHALK AND CRAYON MARKS, PAINT AND DIRT. ALL STORAGE MUST BE ABOVE GROUND AND SLOPED TO ALLOW FREE DRAINAGE OF MELTED SNOW, RAINWATER AND DEW. IF STORED FOR PERIODS LONGER THAT 3 MONTHS, THE MEMBERS MUST BE PLACED ON METAL SUPPORTS . FOR PERIODS OF STORAGE UP TO 3 MONTHS , MEMBERS MAY BE PLACED ON CLEAN, UNTREATED, WOOD TIMBERS.

PLATE GIRDERS SHALL BE STORED WITH THE WEB IN THE UPRIGHT POSITION. MEMBERS MAY BE STACKED, PROVIDED METAL OR WOOD SUPPORTS, AS NOTED ABOVE, SEPARATE INDIVIDUAL MEMBERS. UNDER NO CIRCUMSTANCES SHALL MEMBERS BE NESTED TOGETHER OR BUNDLED.

DO NOT ALLOW TREATED LUMBER OR TREATED TIMBER TO CONTACT STEEL MEMBERS. CONTACT WITH CLEAN, UNTREATED, LUMBER OR TIMBER WILL NOT DAMAGE THE STEEL MEMBERS.

FINAL CLEANUP OF STRUCTURAL STEEL SURFACES

UPON COMPLETION OF ALL CONCRETE CURING OPERATIONS, THE CONTRACTOR SHALL CLEAN ALL STEEL SURFACES TO REMOVE ALL GREASE, OIL, CONCRETE RESIDUE, DIRT AND OTHER FOREIGN SUBSTANCES TO THE SATISFACTION OF THE ENGINEER.

CLEANING MAY BE BY HIGH-PRESSURE WATER, POWER OR HAND WIRE-BRUSHING, OR BY BRUSH-OFF BLAST CLEANING IN ACCORDANCE WITH SSPC-SP 7. IF DETERGENTS AND CLEANERS ARE USED, THE CLEANING SHALL BE FOLLOWED BY A CLEAN-WATER RINSE TO REMOVE ALL RESIDUE. ALL GREASE AND OIL SHALL BE PREVIOUSLY REMOVED BY SOLVENT CLEANING.

USE OF ACIDS TO REMOVE STAINS IS NOT ALLOWED.

COSTS FOR FINAL CLEANUP OF STEEL SURFACES SHALL BE INCLUDED IN ITEM 615001-001, STEEL SUPERSTRUCTURE.

PROTECTION OF CONCRETE SUBSTRUCTURE

PRIOR TO PLACING ANY STEEL SUPERSTRUCTURE MEMBERS ON THE CONCRETE SUBSTRUCTURE UNITS, THE CONTRACTOR SHALL COAT ALL EXPOSED AREAS OF THE ABUTMENTS INCLUDING THE CONCRETE COPING ON THE M.S.E. WALLS IN FRONT OF THE ABUTMENTS WITH AN APPROVED SILANE-BASED CONCRETE SEALER. PREPARATION OF SURFACES, APPLICATION RATES AND METHODS SHALL BE AS RECOMMENDED BY THE SILANE MANUFACTURER.

TAKE APPROPRIATE MEASURES TO PROTECT THE CONCRETE SUBSTRUCTURE FROM RUST STAINING DURING CONSTRUCTION AND CURING OF THE SUPERSTRUCTURE CONCRETE. DEFLECT WATER RUNOFF FROM CURING OPERATIONS AWAY FROM THE STEEL GIRDERS AND DO NOT ALLOW WATER TO DRAIN ONTO THE SUBSTRUCTURE CONCRETE AFTER COMING INTO CONTACT WITH THE WEATHERING STEEL.

UPON COMPLETION OF ALL SUPERSTRUCTURE CONCRETE CURING OPERATIONS, THE CONTRACTOR SHALL REMOVE ALL RUST STAINS FROM SUBSTRUCTURE UNITS TO THE SATISFACTION OF THE ENGINEER, USING PROPRIETARY CHEMICAL STAIN REMOVERS OR MILD ACID ETCHING. IF THE STAINED AREAS ARE SEVERE OR EXTENSIVE, ABRASIVE BLAST CLEANING MAY BE USED TO SUPPLEMENT THE OTHER CLEANING METHODS. ALL CLEANING SHALL BE SUBJECT TO APPROVAL OF THE ENGINEER.

ALL AREAS WHERE RUST STAINS WERE REMOVED, REGARDLESS OF THE CLEANING METHOD USED, SHALL BE RE-COATED WITH AN APPROVED SILANE-BASED CONCRETE SEALER AS SPECIFIED ABOVE.

COST OF SILANE-COATING, PROTECTING, CLEANING AND RE-COATING SUBSTRUCTURE SHALL BE INCLUDED IN ITEM 601002-001, CLASS B CONCRETE.

INDEX TO DRAWINGS

S1	GENERAL PLAN - BORING LAYOUT
S2	PROFILE
S3	GENERAL NOTES
S4	GENERAL NOTES - INDEX TO DRAWINGS
S5	ESTIMATE OF QUANTITIES - BRIDGE
S6	FOUNDATION PLAN
S7	ABUTMENTS NO. 1 & NO. 2
S8	ABUTMENT DETAILS
S9	MSE RETAINING WALL - GENERAL NOTES - TYP. SECTION
S10	MSE WALL AT ABUT. NO. 1 & ABUT. NO. 2
S11	ELEVATION MSE WINGWALLS
S12	FRAMING PLAN
S13	STEEL DETAILS
S14	HANDRAIL DETAILS
S15	CHAMBER DIAGRAM - ROADWAY ELEVATIONS
S16	LOAD RATING - SECTION PROPERTIES
S17	TYPICAL SECTION THRU BRIDGE - POURING SEQUENCE
S18	CONCRETE DECK PLAN
S19	DECK AND BARRIER WALL DETAILS
S20	APPROACH ROADWAY BARRIERS
S21	BICYCLE RAIL POST SPACING - BARRIER JOINT SPACING
S22	BAR SCHEDULE
S23	BICYCLE BARRIER RAIL DETAILS
S24	LIGHTING
S25	LIGHTING BLISTER - DETAILS
S26	JUNCTION BOX DETAILS - TYPE A MODIFIED
S27	APPROACH SLABS
S28	APPROACH SLABS
S29	SITUATION PLAN
S30 - S45	CORE BORINGS

REVISION NUMBER	SHEET NUMBER	REVISIONS	DATE	BY

MOOREFIELD INTERCHANGE BRIDGE

PROJECT NO. X316 - H - 100.40 06 HARDY COUNTY

GENERAL NOTES
INDEX TO DRAWINGS

DESIGNED BY	JCG	DRAWN BY	JCG	INKED BY	PAM	DATE	SHEET NO.
CHECKED BY	WJR	CHECKED BY	WJR	CHECKED BY	WJR	SCALE NONE	S4 of S45

JOHN C. GIESE ENGINEERS, INC.
CONSULTING ENGINEERS CLARKSBURG, W. VA.

10443

PUBLIC ROADS DIV.	STATE DIST. NO.	STATE PROJ. NO.	FEDERAL PROJ. NO.	FISCAL YEAR	COUNTY	SHEET NO.	TOTAL SHEETS
WV	5	X316 -H- 100.40	APD 0484 (251)C 06		HARDY	237	670

SUMMARY OF CONCRETE

Location	Item 601002-001 Class B (CY)	Item 601009-001 Class H (CY)	Item 601009-003 Class H, Architectural (CY)
Abutments	85.00	120.00	
Bridge Deck		322.00	
Barriers on Bridge Deck			19.43
Approach Roadway Barriers	42.00		9.87
Barriers on Approach Slab			6.56
Light Pole Blister			0.14
TOTAL	127.00	442.00	36.00

ESTIMATE OF QUANTITIES

Item No.	Alternate	Description	Unit	Quantity
		BRIDGE NO. 10443		
212005-000		Select Material for Backfilling	CY	90
601002-001		Class B Concrete	CY	127
601009-001		Class H Concrete	CY	442
601009-003		Class H Concrete, Architectural	CY	36
601014-001		Test Slab	LS	1
602002-001		Epoxy Coated Reinforcing Steel Bar	LB	87,888
* 615001-001		Steel Superstructure	LS	1
616005-018		HP14x73 Steel Bearing Piles, Pre-Drilled and Driven	LF	641
617003-001		Aluminum Railing, Anodized	LF	435
627017-001		Install Silicone Expansion Joint System	LF	14
639001-001		Construction Layout Stakes	LS	1
662002-001		Galvanized Steel Conduit	LS	1
662006-001		Junction Box, Type A (Modified)	EA	1
626002-001	TT1	MSE Retaining Wall, Retained Earth	SF	7048
626002-002	TT2	MSE Retaining Wall, Reinforced Earth	SF	7048
626002-003	TT3	MSE Retaining Wall, Isogrid	SF	7048
626002-004	TT4	MSE Retaining Wall, MSE Plus	SF	7048
626002-005	TT5	MSE Retaining Wall, Ares	SF	7048

*Item 615001-001 Includes:

AASHTO M270 Grade 50W	=	354,587 lbs.
Shear Connectors	=	3,090 lbs.
Bolts		2,097 lbs.
TOTAL	=	359,774 lbs.

Elastomeric Bearing Pads
Abutments 16.00 SF

SUMMARY REINFORCING STEEL BARS (Lb.)

No.	Superstructure		Abutments		Barrier Walls (1)		Junction Boxes		Lighting		Total	
	E.C.*	Reg.**	E.C.*	Reg.**	E.C.*	Reg.**	E.C.*	Reg.**	E.C.*	Reg.**	E.C.*	Reg.**
3					582		4				586	
4	17,506				2,043		10				19,559	
5	35,061		8,761		10,526		15		53		54,416	
6			9,461								9,461	
8			3,866								3,866	
TOTAL	52,567		22,088		13,151		29		53		87,888	

*E.C. Denotes Epoxy Coated **Non Epoxy Coated

(1) Includes Barriers on deck and Approach Roadway Barriers.

REVISION NUMBER	SHEET NUMBER	REVISIONS	DATE	BY

MOOREFIELD INTERCHANGE BRIDGE

PROJECT NO. X316-H-100.40 06 HARDY COUNTY

ESTIMATE OF QUANTITIES - BRIDGE

DESIGNED BY	JCG	DRAWN BY		INKED BY	JD	DATE		SHEET NO
CHECKED BY	WJR	CHECKED BY		CHECKED BY	WJR	SCALE	NONE	S5 of S45

JOHN C. GIESE ENGINEERS, INC.
CONSULTING ENGINEERS CLARKSBURG, W. VA.

10443

PUBLIC ROADS ENT.	STATE DIST. NO.	STATE PROJ. NO.	FEDERAL PROJ. NO.	FISCAL YEAR	COUNTY	SHEET NO.	TOTAL SHEETS
WV	5	X316 -H- 100.40 06	APD 0464 (251)C		HARDY	238	670

COORDINATES (FT.)		
	NORTHING	EASTING
WP#1	211,063.0341	2,124,042.5047
WP#2	211,187.0686	2,124,064.6731

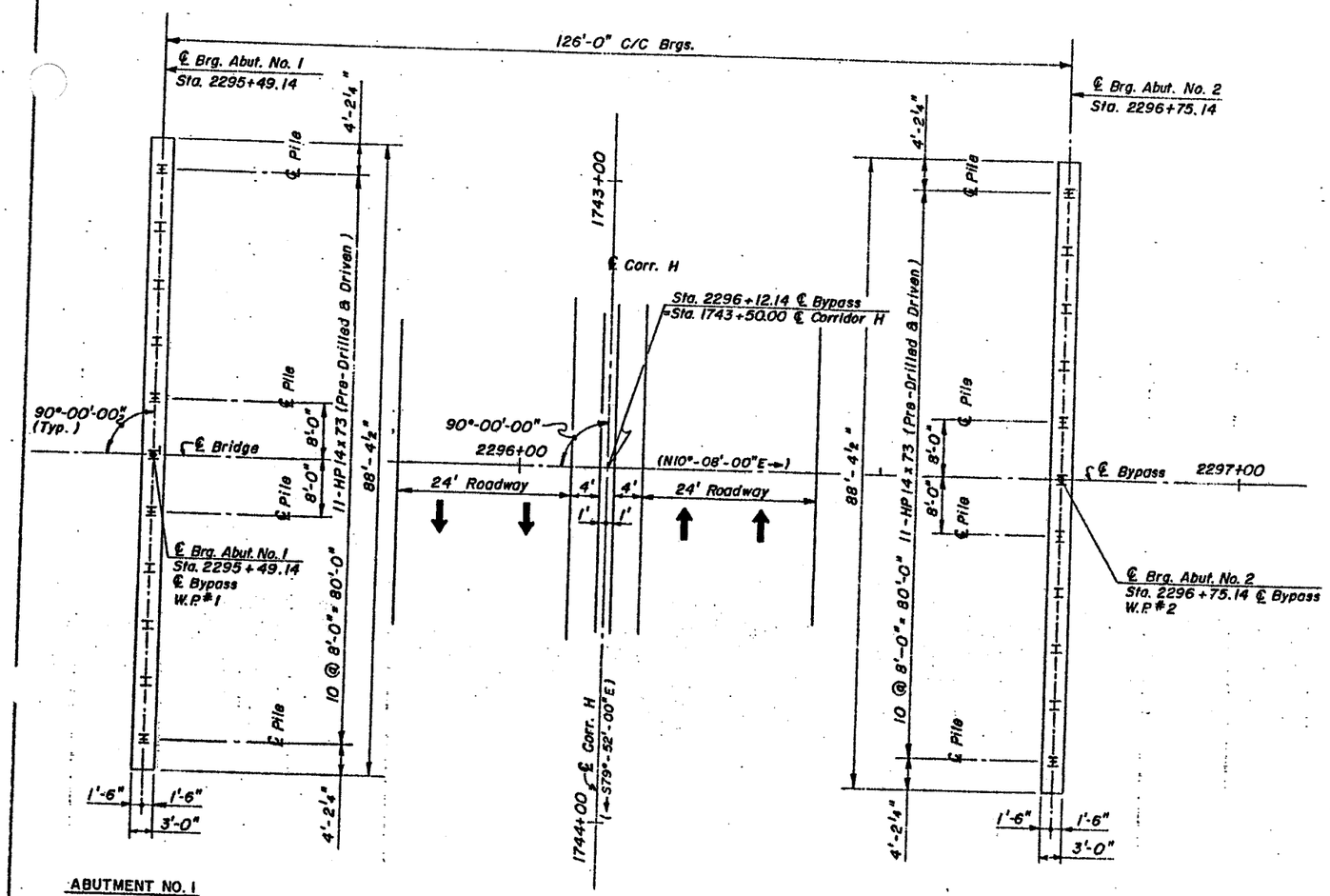

ABUTMENT NO. 1

FOUNDATION PLAN
Scale = 1" = 10'

ABUTMENT NO. 2

REVISION NUMBER	SHEET NUMBER	REVISIONS	DATE	BY

MOOREFIELD INTERCHANGE BRIDGE

PROJECT NO. X316-H-100.40 06 HARDY COUNTY

FOUNDATION PLAN

DESIGNED BY	JCG	DRAWN BY		INKED BY	RWK	DATE	SHEET NO.
CHECKED BY	WJR	CHECKED BY		CHECKED BY	WJR	SCALE AS NOTED	S6 of S45

JOHN C. GIESE ENGINEERS, INC.
CONSULTING ENGINEERS CLARKSBURG, W. VA.

10443

PUBLIC ROADS DIV.	STATE DIST. NO.	STATE PROJ. NO.	FEDERAL PROJ. NO.	FISCAL YEAR	COUNTY	SHEET NO.	TOTAL SHEETS
WV	5	X316 -H- 100.40 06	APD 0464 (251)C		HARDY	239	670

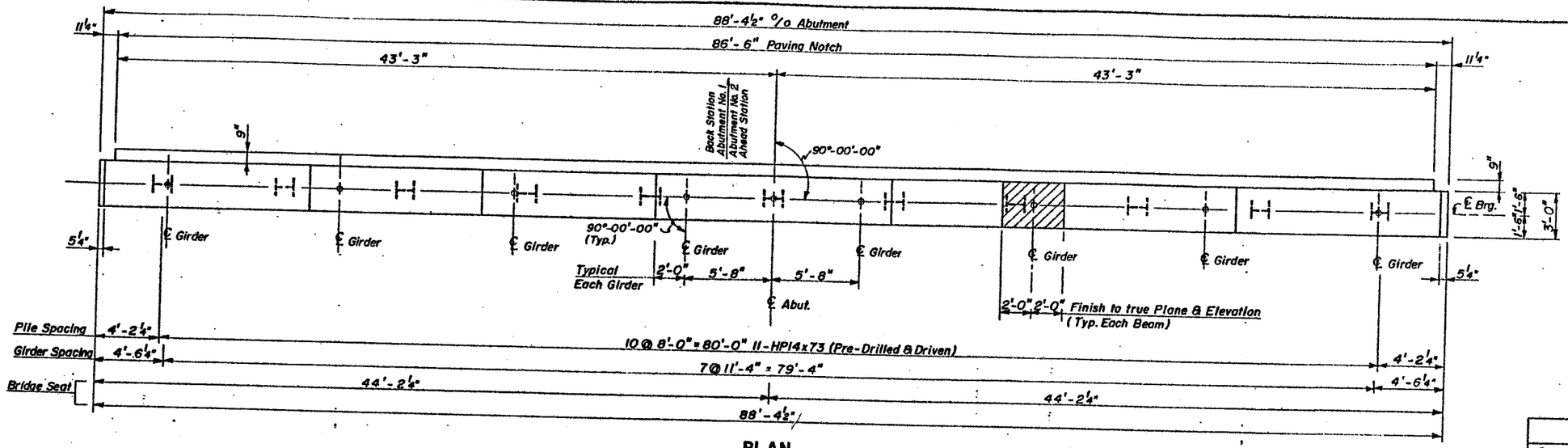

PLAN
Scale: ¼" = 1'-0"

ABUTMENT ELEVATIONS		
Point	Abutment No. 1	Abutment No. 2
A	849.74	852.26
B	848.90	851.42
C	843.06	845.58
D	842.83	845.35
E	842.60	845.12
F	842.37	844.89
G	838.37	840.89

REFERENCES	SHEET NO.
General Notes	S3,S4
Notes For Abutments	S8
Section A-A	S8
Estimate of Quantities	S8
Detail B	S8

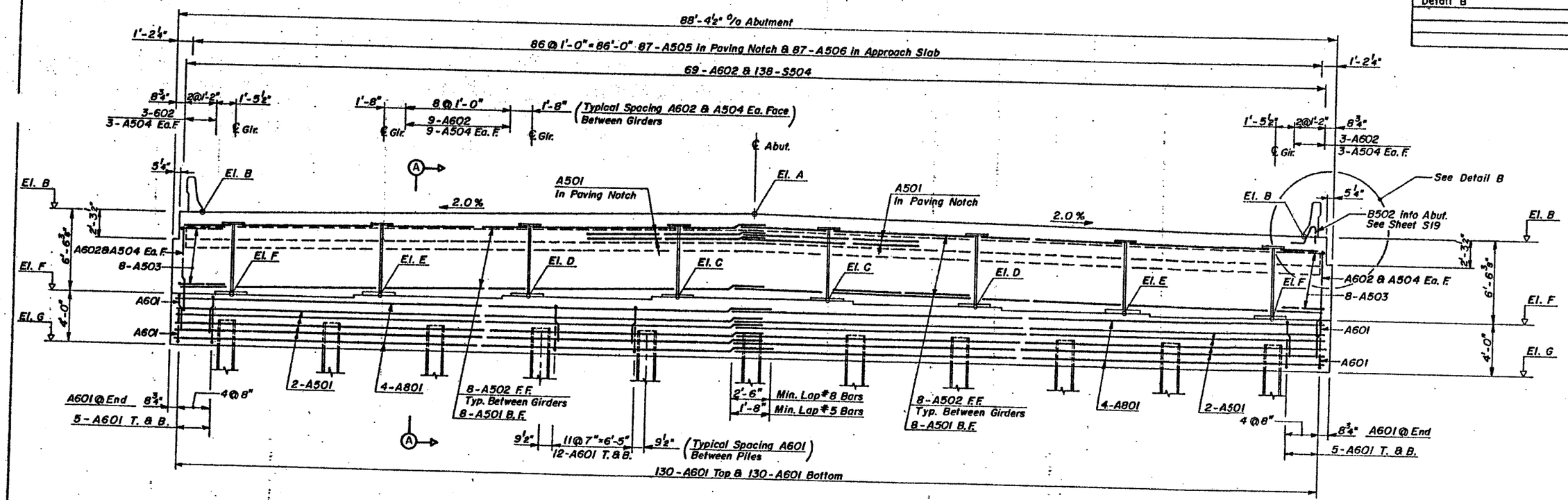

ELEVATION
Scale: ¼" = 1'-0"

REVISION NUMBER	SHEET NUMBER	REVISIONS	DATE	BY

MOOREFIELD INTERCHANGE BRIDGE

PROJECT NO. X316-H-100.40 06 HARDY COUNTY

ABUTMENT NO. 1 & NO. 2 AS NOTED

DESIGNED BY	JF	DRAWN BY	JCG SLN	INKED BY	SLN	DATE		SHEET NO.
CHECKED BY	JCG	CHECKED BY	WJR	CHECKED BY	WJR	SCALE	AS NOTED	S7 of S45

JOHN C. GIESE ENGINEERS, INC.
CONSULTING ENGINEERS CLARKSBURG, W. VA.

10443

PUBLIC ROADS DIV.	STATE DIST. NO.	STATE PROJ. NO.	FEDERAL PROJ. NO.	FISCAL YEAR	COUNTY	SHEET NO.	TOTAL SHEETS
WV	5	X316 -H- 100.40	APD 0484 (251)C		HARDY	240	670

06

ABUTMENTS-ESTIMATED QUANTITIES

No.	Item	Unit	ABUT. NO. 1 Quantity	ABUT. NO. 2 Quantity	TOTAL Quantity
212005-000	Select Material For Backfilling	CY	45	45	90
601002-001	Class B Concrete	CY	42.5	42.5	85
601009-001	Class H Concrete	CY	60	60	120
602002-001	Epoxy Coated Reinforcing Bar	LB	11,044	11,044	22,088
616005-018	HP14x73 Steel Bearing Piles Pre-Drilled & Driven	LF	306.5	334.5	641

NOTES FOR ABUTMENTS

1. Concrete for Abutments shall be Class B and/or Class H as indicated in Section A-A.
2. Select Material for Backfilling will be paid for at the unit price bid for Item 212005-000 per c.y.
3. F.F. = Front Face
   B.F. = Back Face
   Ea. F. = Each Face

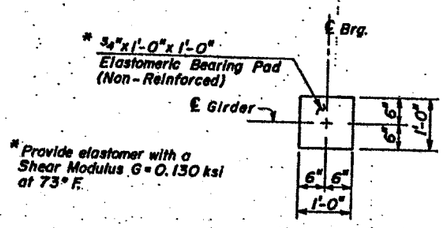

DETAIL C
N.T.S.

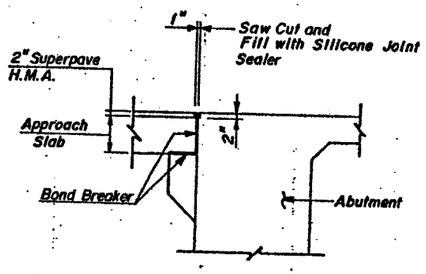

DETAIL D
N.T.S.

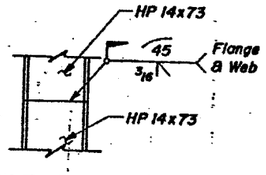

TYPICAL PILE SPLICING DETAIL
N.T.S.

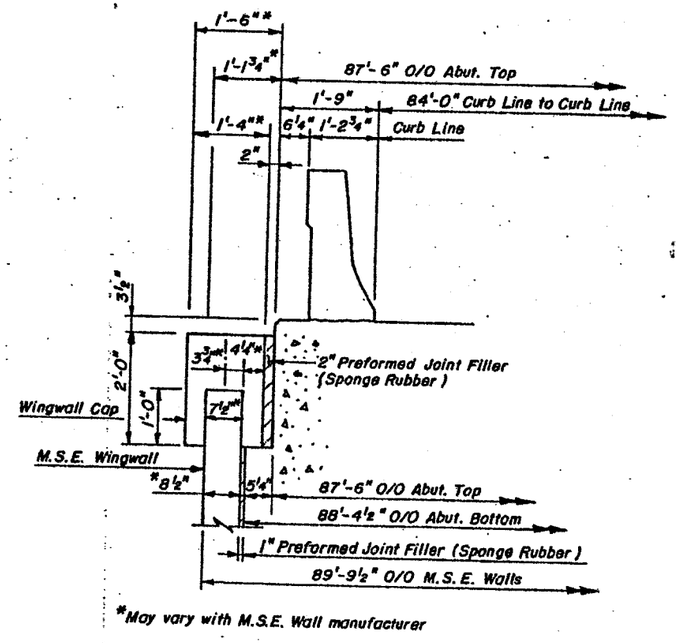

DETAIL B
Scale : 3/4" = 1'-0"

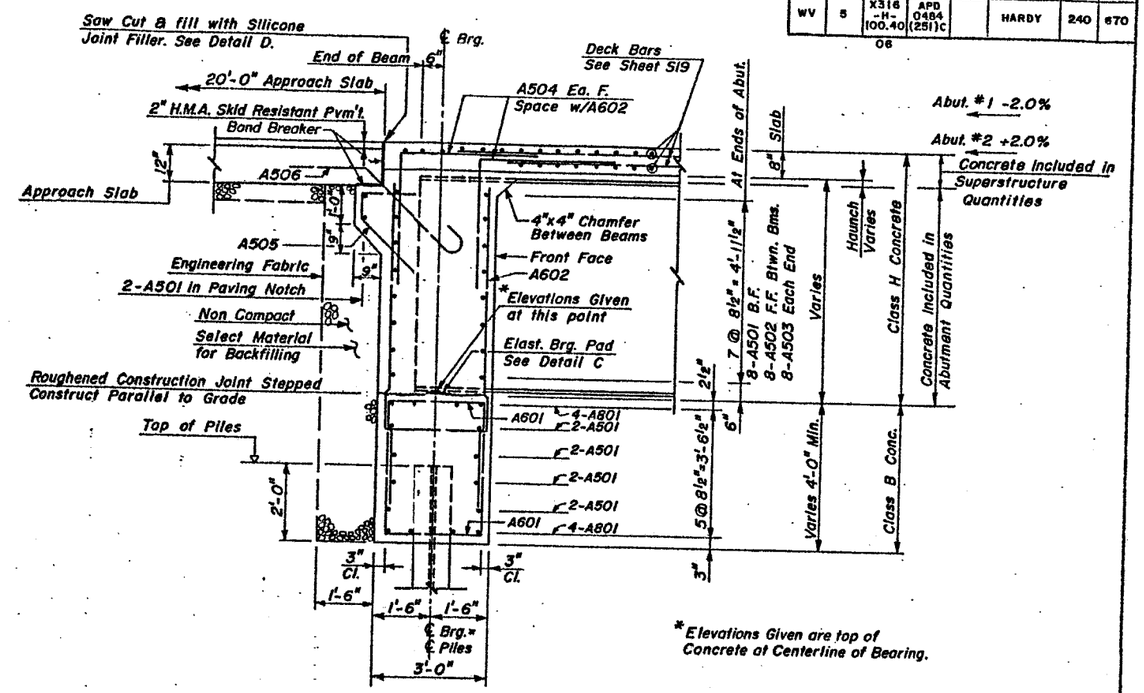

SECTION A - A
Scale : 1/2" = 1'-0"

REVISION NUMBER	SHEET NUMBER	REVISIONS	DATE	BY

MOOREFIELD INTERCHANGE BRIDGE

PROJECT NO. X316-H-100.40 06 HARDY COUNTY

ABUTMENTS - DETAILS
ESTIMATE OF QUANTITIES - NOTES

DESIGNED BY	JF	DRAWN BY	JCG	INKED BY	JD	DATE	SHEET NO.
CHECKED BY	JCG	CHECKED BY	WJR	CHECKED BY	WJR	SCALE AS NOTED	S8 of S45

JOHN C. GIESE ENGINEERS, INC.
CONSULTING ENGINEERS CLARKSBURG, W. VA.

10443

PUBLIC ROADS DIV.	STATE DIST. NO.	STATE PROJ. NO.	FEDERAL PROJ. NO.	FISCAL YEAR	COUNTY	SHEET NO.	TOTAL SHEETS
WV	5	X316 -H- 100.40 06	APD 0484 (251) C		HARDY	241	670

MECHANICALLY STABILIZED EARTH WALLS (MSE)

GENERAL NOTES

1. THE DESIGN, MATERIALS, CONSTRUCTION METHODS, METHOD OF MEASUREMENT AND BASIS OF PAYMENT SHALL BE IN ACCORDANCE WITH SECTION 626 OF THE WEST VIRGINIA DIVISION OF HIGHWAYS SUPPLEMENTAL SPECIFICATIONS ISSUED JANUARY 1, 2003.

2. A SUBSURFACE INVESTIGATION AND AN ANALYSIS OF THE MSE WALLS AS SHOWN ON THE PLANS HAS BEEN PERFORMED BY FOX ENGINEERING, PLLC, RAVENSWOOD, WEST VIRGINIA FOR JOHN C. GIESE ENGINEERS, INC. THE FOUR MODES OF EXTERNAL STABILITY WHICH WERE ANALYZED ARE:
   1. BEARING CAPACITY
   2. OVERTURNING
   3. SLIDING
   4. OVERALL STABILITY

3. THE ALLOWABLE BEARING CAPACITY FOR THE MSE WALL SYSTEM BASED ON A MINIMUM FACTOR OF SAFETY OF 2.0 IS 8000 P.S.F. FOR THE MAXIMUM HEIGHT SECTION.

4. THE WIDTH OF THE REINFORCED SECTION FOR FULL HEIGHT OF THE WALL SHALL BE 0.7 TIMES THE TOTAL WALL HEIGHT IN ORDER TO PROVIDE A MINIMUM FACTOR OF SAFETY FOR THE EXTERNAL STABILITY MODES AS FOLLOWS:

MODE	MINIMUM FACTOR OF SAFETY
SLIDING ALONG WALL BASE	1.5
OVERTURNING ABOUT WALL TOE	2.0
OVERALL STABILITY	1.5

5. IN EXCAVATING FOR THE LEVELLING PADS, THE CONTRACTOR HAS THE OPTION OF CUTTING THE EXISTING ROCK TO TRUE ELEVATION OR OVER CUTTING THE ROCK AND BACKFILLING TO TRUE ELEVATION WITH CLASS D CONCRETE. ANY CONCRETE USED FOR THE LEVELLING PADS INSTALLATION SHALL BE AT THE CONTRACTOR'S EXPENSE.

6. THE WALL LAYOUTS ARE SCHEMATIC AND DO NOT INDICATE THAT ONE APPROVED MSE WALL SYSTEM IS PREFERRED OVER ANY OTHER APPROVED MSE WALL SYSTEM.

7. FOR MSE RETAINING WALL ELEVATIONS, SEE SHEETS S10 AND S11. FOR MSE RETAINING WALL PLAN, SEE SHEET S1.

8. THE EXTERIOR CONCRETE SURFACE OF THE MSE WALL PANELS AT ABUTMENT NO. 1 & ABUTMENT NO. 2 SHALL HAVE AN ARCHITECTURAL SURFACE TREATMENT AND/OR A CONCRETE FINISH AT THE LOCATIONS SHOWN ON SHEET S10. ALL MSE WALL PANELS IN WINGWALLS A, B, C, & D AS SHOWN ON SHEET S11 SHALL HAVE AN ARCHITECTURAL SURFACE TREATMENT. SEE ROADWAY PLAN SHEETS 232 A AND 232 B FOR ARCHITECTURAL TREATMENT DETAILS.

9. THE CONTRACTOR SHALL SUBMIT TO THE ENGINEER THE FINAL DESIGN FOR THE MSE RETAINING WALL ALTERNATIVE BID FOR REVIEW AS SHOP DRAWINGS. THE DRAWINGS SHALL INCLUDE DETAIL DESIGN COMPUTATIONS AND ALL DETAILS, DIMENSIONS, AND QUANTITIES NECESSARY TO CONSTRUCT THE MSE RETAINING WALL.

10. THE CONTRACTOR SHALL SUBMIT A SAMPLE PANEL OF SQUARE SHAPE WITH THE PROPOSED ARCHITECTURAL SURFACE TREATMENT TO THE ENGINEER FOR APPROVAL IN ACCORDANCE WITH STANDARD SPECIFICATIONS SECTION 601.8.10 AND 626. DO NOT BEGIN WORK WITHOUT THE WRITTEN APPROVAL OF THE ARCHITECTURAL SURFACE TREATMENT FROM THE ENGINEER. PRODUCTION PANELS TO BE SQUARE SHAPE ONLY.

11. FOR WALL PAY LIMITS. SELECT GRANULAR MATERIAL AND SELECT MATERIAL FOR BACKFILLING, SEE SECTION AT ABUTMENTS AND WINGWALLS THIS SHEET.

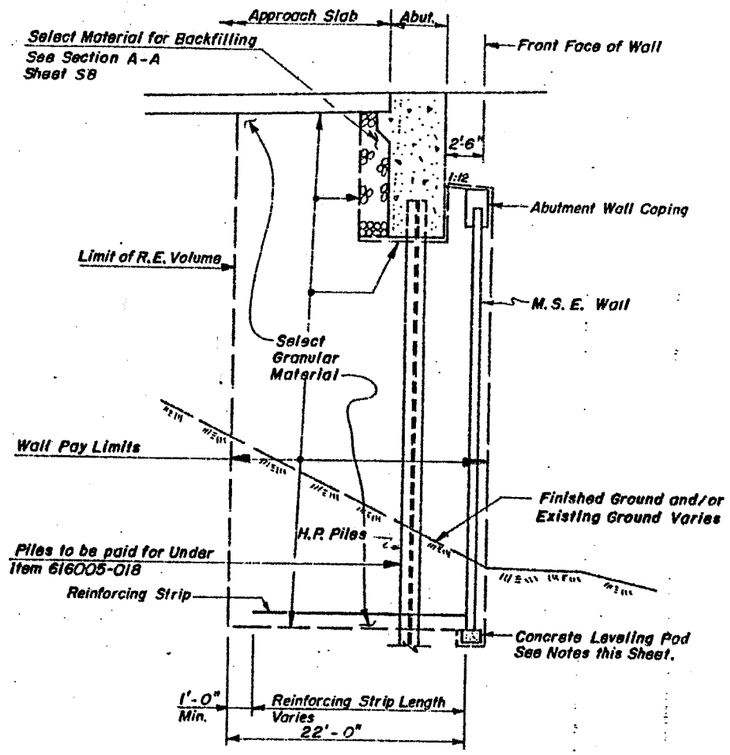

SECTION AT ABUTMENTS

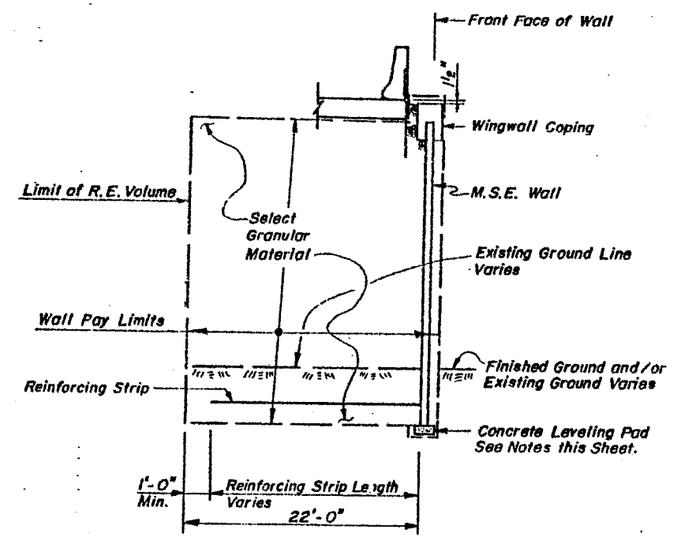

SECTION AT WINGWALLS

TYPICAL SECTIONS
N.T.S.

ESTIMATED QUANTITIES - M.S.E. WALLS	
LOCATION	Quantities (S.F.)
Wall at Abutment No. 1	1605
Wall at Abutment No. 2	1831
Wingwall A	787
Wingwall B	787
Wingwall C	1019
Wingwall D	1019
TOTAL	7048

REVISION NUMBER	SHEET NUMBER	REVISIONS	DATE	BY

MOOREFIELD INTERCHANGE BRIDGE

PROJECT NO. X316 - H - 100.40 06 HARDY COUNTY

M.S.E. RETAINING WALL
GENERAL NOTES - TYPICAL SECTIONS

DESIGNED BY	JF	DRAWN BY	RWK	INKED BY	RWK	DATE	SHEET NO.
CHECKED BY	JCG	CHECKED BY	WJR	CHECKED BY	WJR	SCALE NONE	S9 of S45

JOHN C. GIESE ENGINEERS, INC.
CONSULTING ENGINEERS CLARKSBURG, W. VA.

10443

PUBLIC ROADS DIV.	STATE DIST. NO.	STATE PROJ. NO	FEDERAL PROJ. NO.	FISCAL YEAR	COUNTY	SHEET NO.	TOTAL SHEETS
WV	5	X316 -H- 100.40 06	APD 0484 (251)C		HARDY	242	670

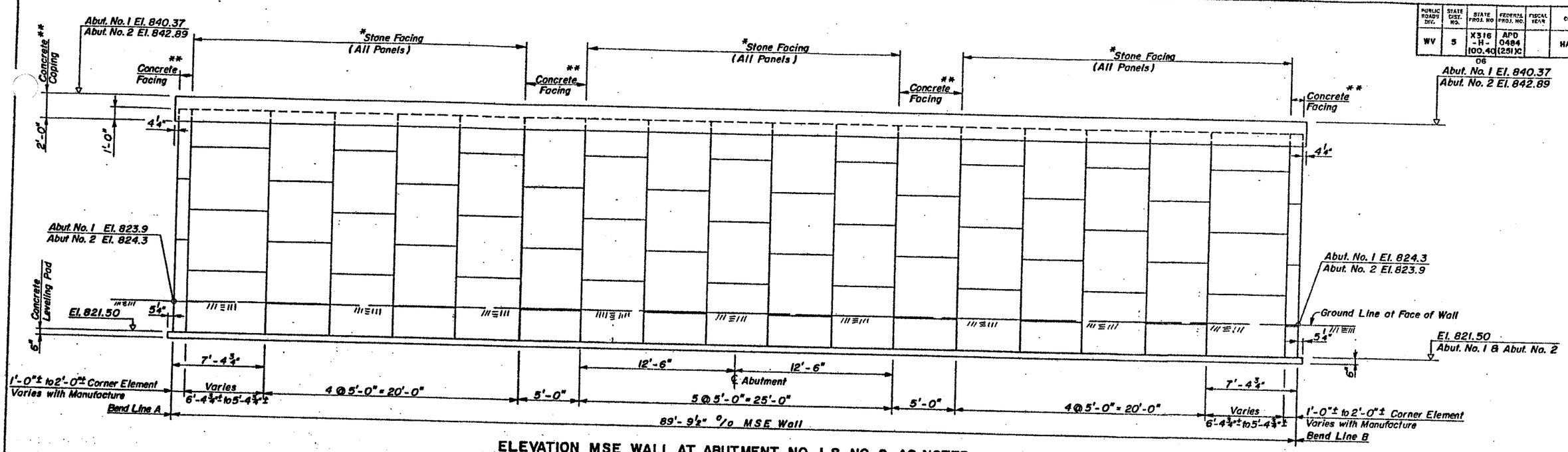

ELEVATION MSE WALL AT ABUTMENT NO. 1 & NO. 2 AS NOTED

Scale: ¼" = 1'-0"

Abutment No. 1 Looking Back Station
Abutment No. 2 Looking Ahead Station

For Location of Bend Lines A & B See Sheet S1.

* Denotes An Architectural Surface Treatment.
** Rubbed Finish, Class 2

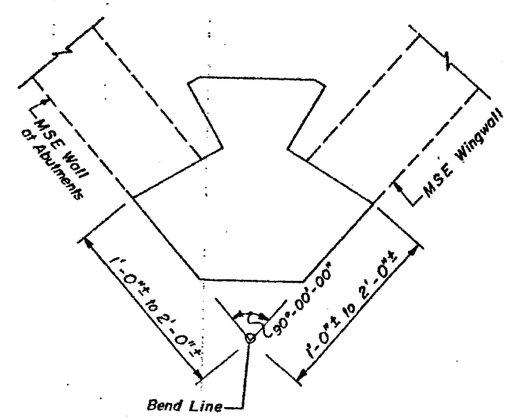

TYPICAL CORNER ELEMENT **

N.T.S.

Corner Element Varies with Manufactures.

REVISION NUMBER	SHEET NUMBER	REVISIONS	DATE	BY

MOOREFIELD INTERCHANGE BRIDGE

PROJECT NO. X316-H-100.40 06 HARDY COUNTY

MSE WALL AT ABUT. NO. 1 & ABUT. NO. 2

DESIGNED BY	JF	DRAWN BY	JCG	INKED BY	SLN	DATE	SHEET NO.
CHECKED BY	JCG	CHECKED BY	WJR	CHECKED BY	WJR	SCALE AS NOTED	S10 of S45

JOHN C. GIESE ENGINEERS, INC.
CONSULTING ENGINEERS CLARKSBURG, W. VA.

10443

PUBLIC ROADS DIV.	STATE DIST. NO.	STATE PROJ. NO.	FEDERAL PROJ. NO.	FISCAL YEAR	COUNTY	SHEET NO.	TOTAL SHEETS
WV	5	X316 -H- 100.40 06	APD 0484 (251)C		HARDY	243	870

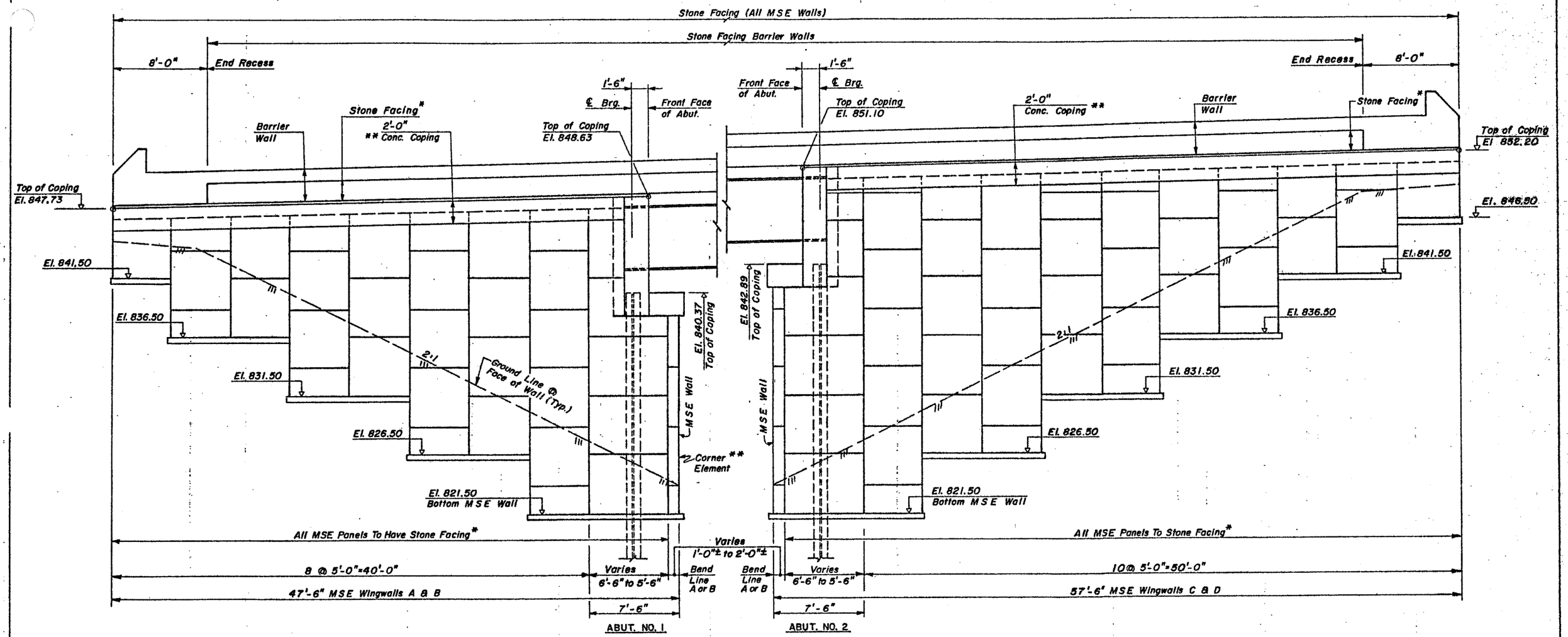

ELEVATION MSE WINGWALLS A, B, C & D

Scale : 1/4" = 1'-0"

For Location of Wingwalls See Sheet S1.

* Denotes An Architectural Surface Treatment
** Rubbed Finish, Class 2.

REVISION NUMBER	SHEET NUMBER	REVISIONS	DATE	BY

MOOREFIELD INTERCHANGE BRIDGE

PROJECT NO. X316-H-100.40 06 HARDY COUNTY

ELEVATION MSE WINGWALLS

DESIGNED BY	JF	DRAWN BY	JCG	INKED BY	JD	DATE		SHEET NO.
CHECKED BY	JCG	CHECKED BY	WJR	CHECKED BY	WJR	SCALE	AS NOTED	S11 of S45

JOHN C. GIESE ENGINEERS, INC.
CONSULTING ENGINEERS CLARKSBURG, W. VA.

10443

PUBLIC ROADS DIV.	STATE DIST. NO.	STATE PROJ. NO.	FEDERAL PROJ. NO.	FISCAL YEAR	COUNTY	SHEET NO.	TOTAL SHEETS
WV	5	X316 -H- 100.40	APD 0464 (251)C		HARDY	244	670

06

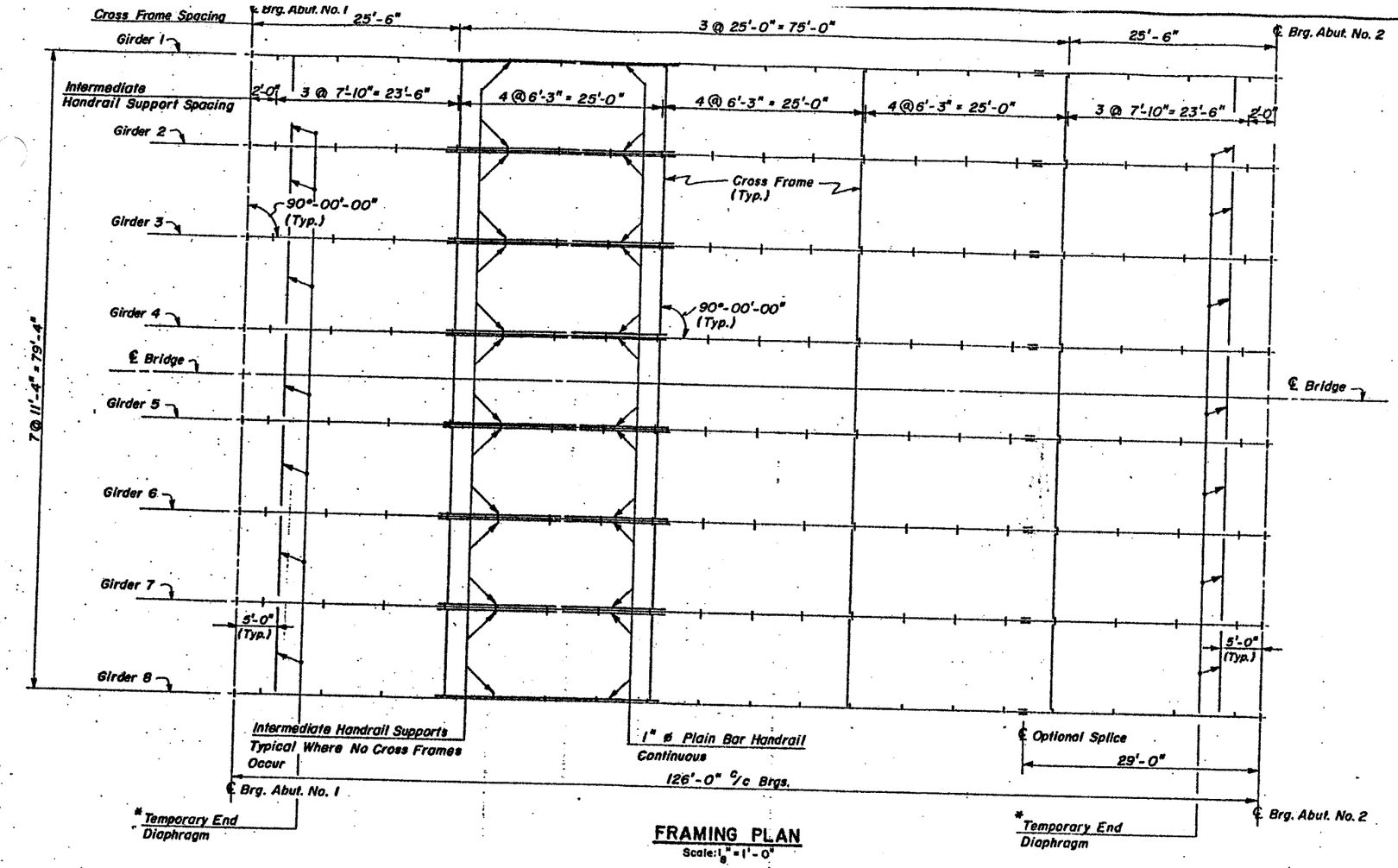

FRAMING PLAN

Scale: 1/8" = 1'-0"

* Temporary End Diaphragms shall be designed and furnished by the Contractor. See General Notes - Shop Drawings, Sheet S3. The temporary diaphragms are to be removed after placement and curing of the deck.

REFERENCES	SHEET NO.
General Notes	S3, S4
Camber Diagram & Roadway Elevations	S15
Splices - Crossframes - Bearing Stiffeners	S13
Handrail Details	S14

NOTES FOR STEEL SUPERSTRUCTURE

1) All dimensions shown on Framing Plan are horizontal.
2) Bearing stiffeners shall have a tight fit at the top and milled to bear at the bottom.
3) Bearing stiffeners and ends of girders shall be vertical under full dead load at 68° F.
4) Connection plates for cross frames to be set perpendicular to the flanges. They shall be welded to the top and bottom flanges per detail.

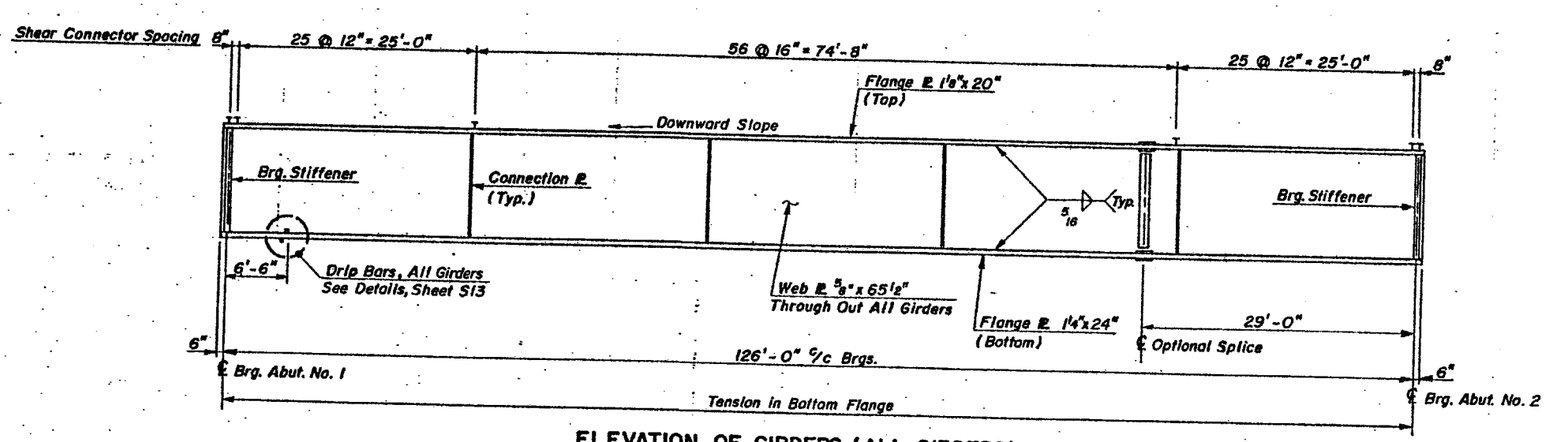

ELEVATION OF GIRDERS (ALL GIRDERS)

N.T.S.

REVISION NUMBER	SHEET NUMBER	REVISIONS	DATE	BY

MOOREFIELD INTERCHANGE BRIDGE

PROJECT NO. X316-H-100.40 06 — HARDY COUNTY

FRAMING PLAN

DESIGNED BY	JF	DRAWN BY	JD	INKED BY	SLN	DATE	SHEET NO.
CHECKED BY	JCG	CHECKED BY	WJR	CHECKED BY	WJR	SCALE AS NOTED	S12 of S45

JOHN C. GIESE ENGINEERS, INC.
CONSULTING ENGINEERS — CLARKSBURG, W. VA.

10443

PUBLIC ROADS CIV.	STATE DIST. NO.	STATE PROJ. NO.	FEDERAL PROJ. NO.	FISCAL YEAR	COUNTY	SHEET NO.	TOTAL SHEETS
WV	5	X316 -H- 100.40 06	APD 0484 (251)C		HARDY	245	670

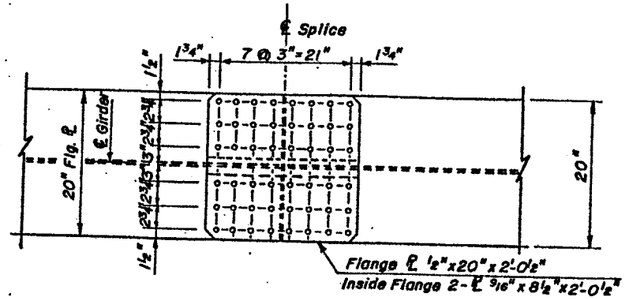

PLAN - FLANGE SPLICE - TOP

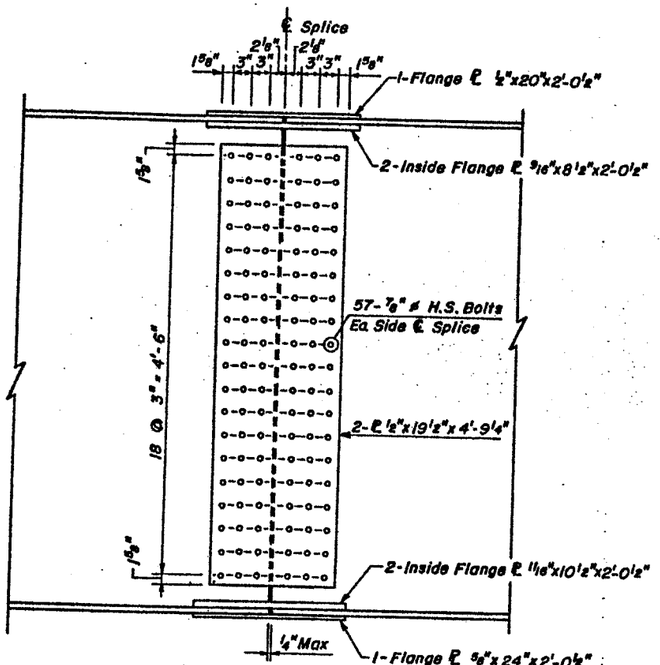

ELEVATION

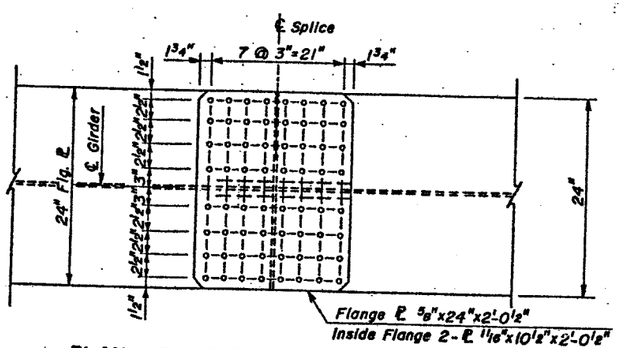

PLAN - FLANGE SPLICE - BOTTOM

SPLICE DETAIL
N.T.S.

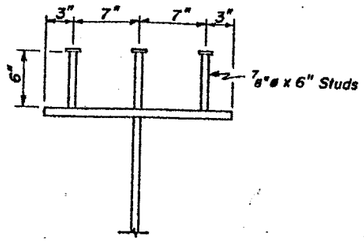

SHEAR CONNECTORS
N.T.S.

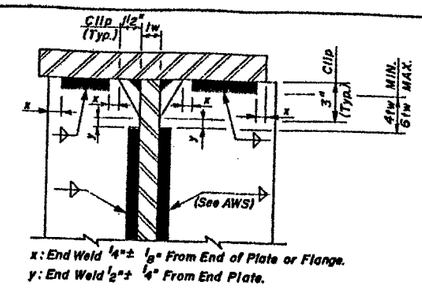

STIFFENER TO WEB / FLANGE CONNECTION WELDS
N.T.S.

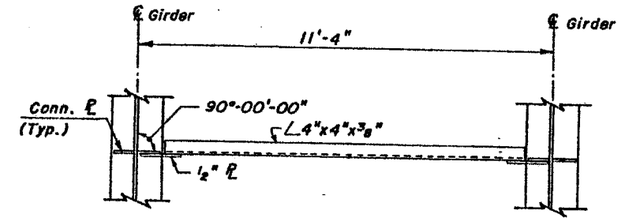

PLAN

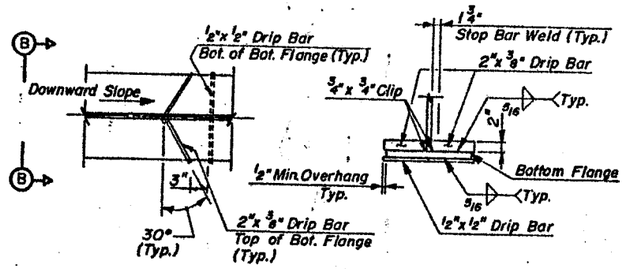

PLAN-DRIP BARS VIEW B-B

DETAILS - DRIP BARS
N.T.S.

NOTES FOR DRIP BARS

The drip bar on top of bottom flange shall be caulked with dark brown caulking against flange, web, and fillet weld subject to the approval of the Engineer. There is no separate payment for furnishing and installing the caulking and all costs shall be included in Item 615001-001.

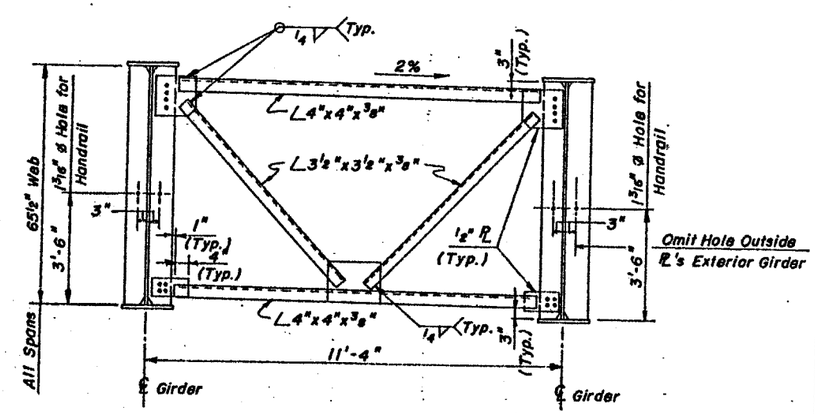

ELEVATION
TYPICAL CROSS FRAME
N.T.S.

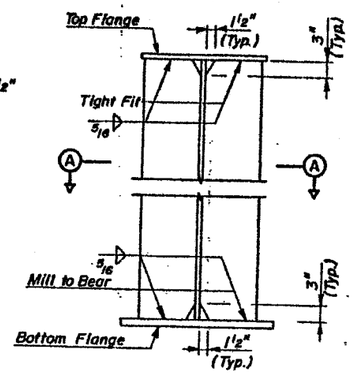

ELEVATION

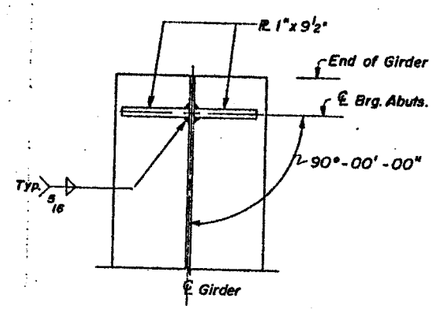

SECTION A-A

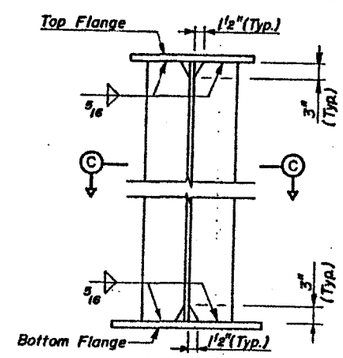

ELEVATION

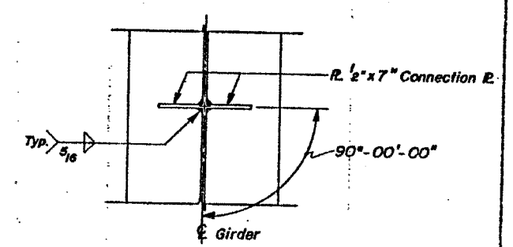

SECTION C-C

CONNECTION ℘'S AT CROSS FRAMES
Scale: 1" = 1'-0"

BEARING STIFFENERS
Scale: 1" = 1'-0"

REVISION NUMBER	SHEET NUMBER	REVISIONS	DATE	BY

MOOREFIELD INTERCHANGE BRIDGE

PROJECT NO. X316-H-100.40 06 HARDY COUNTY

STEEL DETAILS

DESIGNED BY	JF	DRAWN BY	WJR	INKED BY	RWK SLN	DATE	SHEET NO.
CHECKED BY	JCG	CHECKED BY		CHECKED BY	WJR	SCALE AS NOTED	S13 of S45

JOHN C. GIESE ENGINEERS, INC.
CONSULTING ENGINEERS CLARKSBURG, W. VA.

10443

PUBLIC ROADS DIV.	STATE DIST. NO.	STATE PROJ. NO.	FEDERAL PROJ. NO.	FISCAL YEAR	COUNTY	SHEET NO.	TOTAL SHEETS
WV	5	X316 -H- 100.40 06	APD 0484 (251)C		HARDY	246	670

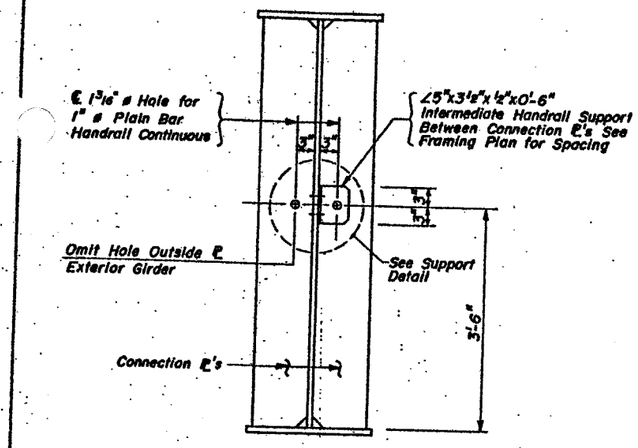

TYPICAL GIRDER
N.T.S.

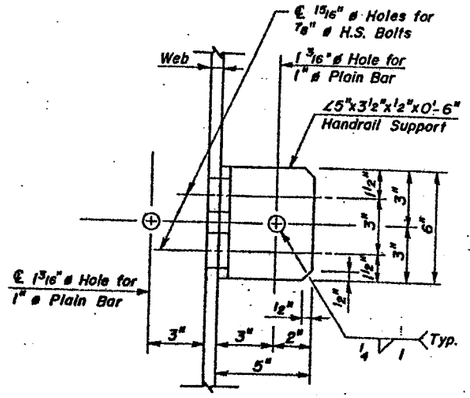

SUPPORT DETAIL
N.T.S.

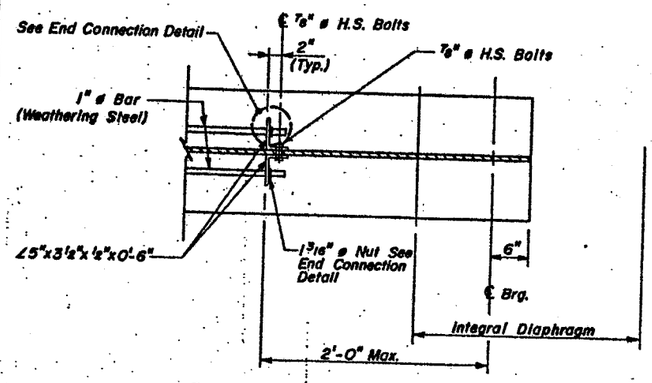

PLAN - HANDRAIL AT END
N.T.S.

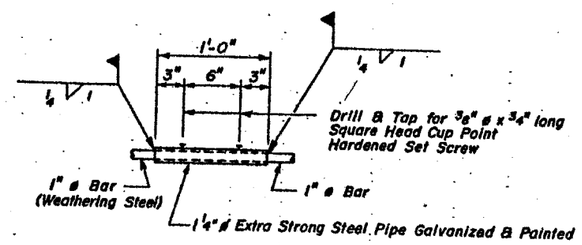

BOLTED FIELD SPLICE DETAIL
N.T.S.

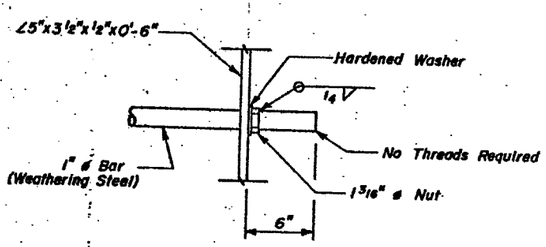

END CONNECTION DETAIL
N.T.S.

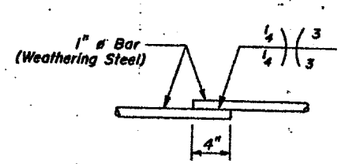

WELDED SHOP SPLICE DETAIL
N.T.S.

NOTES FOR HANDRAIL

1. Fourteen rows of Handrail shall be provided as shown on the Framing Plans (both sides of Interior girders and inside face of Exterior girders).
2. Handrail shall be placed through holes in all connection plates and intermediate handrail support angles as shown on the Framing Plan.
3. Handrail shall be field erected in the vicinity of the girder bolted splice. At all other locations it may be either shop or field erected.
4. Welded splicing is shop welding only.
5. Set screws coupling may be provided for shop as well as field erection.
6. All material for the handrails including intermediate support angles, handrail bars and couplings for bolted splices shall be weathering steel, except as noted.

REVISION NUMBER	SHEET NUMBER	REVISIONS	DATE	BY

MOOREFIELD INTERCHANGE BRIDGE

PROJECT NO. X316 - H - 100.40 06 HARDY COUNTY

HANDRAIL DETAILS

DESIGNED BY	JCG	DRAWN BY	JO	INKED BY	JD	DATE		SHEET NO.
CHECKED BY	WJR	CHECKED BY	WJR	CHECKED BY	SLN	SCALE	NONE	S14 of S45

JOHN C. GIESE ENGINEERS, INC.
CONSULTING ENGINEERS CLARKSBURG, W. VA.

10443

PUBLIC ROADS DIV.	STATE DIST. NO.	STATE PROJ. NO.	FEDERAL PROJ. NO.	FISCAL YEAR	COUNTY	SHEET NO.	TOTAL SHEETS
WV	5	X316 -H- 100.40 06	APD 0484 (251)C		HARDY	247	670

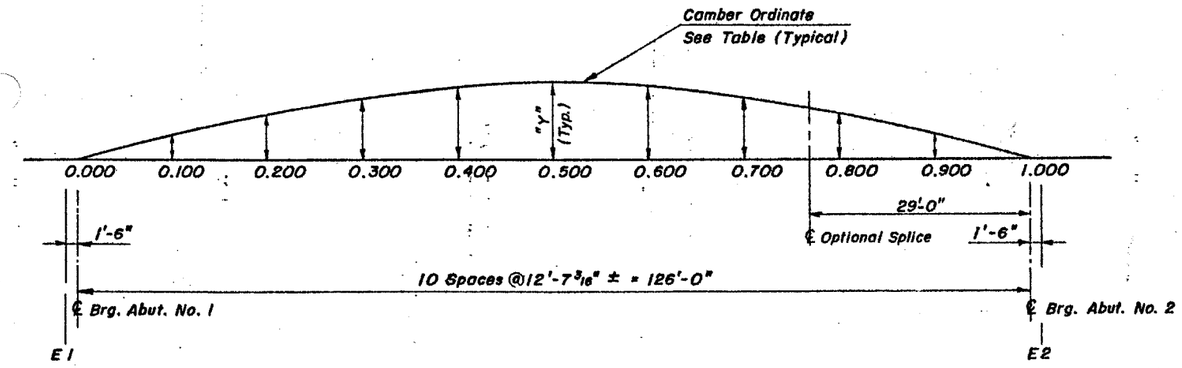

TOTAL DEAD LOAD CAMBER DIAGRAM

N.T.S.

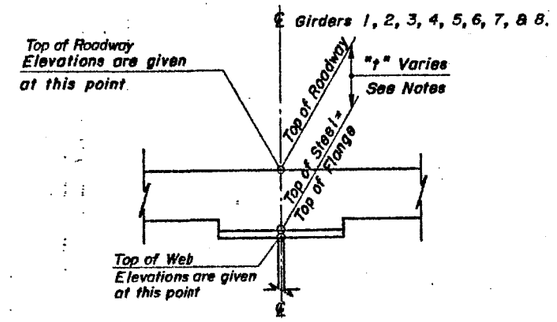

TYPICAL LOCATIONS FOR ELEVATIONS TOP OF STEEL & TOP OF ROADWAY

N.T.S.

CAMBER ORDINATES ("Y") INCHES *

Girders		0.000 ℄ Brg. Abut. No. 1	0.100	0.200	0.300	0.400	0.500	0.600	0.700	0.800	0.900	1.000 ℄ Brg. Abut. No. 2
1 & 8	Camber Due to Weight of Steel	0	0.283	0.536	0.734	0.859	0.902	0.859	0.734	0.536	0.283	0
	Camber Due to Weight of Deck & Stay in Place Forms	0	0.938	1.774	2.429	2.845	2.988	2.845	2.429	1.774	0.938	0
	Camber Due to Weight of Parapets	0	0.185	0.350	0.479	0.561	0.588	0.560	0.478	0.349	0.184	0
	Total Dead Load Camber "Y"	0	1.406	2.660	3.642	4.265	4.478	4.264	3.641	2.659	1.405	0
2,3, 4,5, 6&7	Camber Due to Weight of Steel	0	0.283	0.536	0.734	0.859	0.902	0.859	0.734	0.536	0.283	0
	Camber Due to Weight of Deck & Stay in Place Forms	0	1.141	2.159	2.956	3.462	3.635	3.462	2.956	2.159	1.141	0
	Camber Due to Weight of Parapets	0	0.182	0.345	0.472	0.553	0.580	0.552	0.471	0.344	0.181	0
	Total Dead Load Camber "Y"	0	1.606	3.040	4.162	4.874	5.117	4.873	4.161	3.039	1.605	0

* Note: Girders are to be Cambered for Total Dead Load.

TOP OF WEB ELEVATIONS

Girders	℄ Brg. Abut. No. 1	℄ Optional Splice Bk. Sta.	℄ Optional Splice Ah. Sta.	℄ Brg. Abut. No. 2
	0.00	0.770		1.00
1 & 8	848.01	849.95	849.95	850.53
2 & 7	848.23	850.17	850.17	850.75
3 & 6	848.46	850.40	850.40	850.98
4 & 5	848.69	850.63	850.63	851.21

TOP OF ROADWAY ELEVATIONS & DEFLECTIONS **

	Girders	E1	0.000 ℄ Brg. Abut. #1	0.100	0.200	0.300	0.400	0.500	0.600	0.700	0.800	0.900	1.000 ℄ Brg. Abut. #2	E2
El. Top of Rdwy.	1 & 8	848.92	848.95	849.20	849.45	849.70	849.95	850.21	850.46	850.71	850.96	851.21	851.47	851.50
Conc. D.L. Defl.		0.00	0.00	0.10	0.18	0.24	0.28	0.30	0.28	0.24	0.18	0.10	0.00	0.00
El. Top of Rdwy.	2 & 7	849.14	849.17	849.43	849.68	849.93	850.18	850.43	850.69	850.94	851.19	851.44	851.69	851.72
Conc. D.L. Defl.		0.00	0.00	0.11	0.21	0.28	0.33	0.35	0.33	0.28	0.21	0.11	0.00	0.00
El. Top of Rdwy.	3 & 6	849.37	849.40	849.65	849.90	850.16	850.41	850.66	850.91	851.16	851.42	851.67	851.92	851.95
Conc. D.L. Defl.		0.00	0.00	0.11	0.21	0.28	0.33	0.35	0.33	0.28	0.21	0.11	0.00	0.00
El. Top of Rdwy.	4 & 5	849.60	849.63	849.88	850.13	850.38	850.63	850.89	851.14	851.39	851.64	851.89	852.15	852.18
Conc. D.L. Defl.		0.00	0.00	0.11	0.21	0.28	0.33	0.35	0.33	0.28	0.21	0.11	0.00	0.00

**Dead Load of Concrete Only (in feet). The dead load of Concrete includes the Slab, Stay-in-Place Forms and Parapets.

NOTES FOR TOP OF ROADWAY ELEVATIONS & DEFLECTIONS TABLE

Elevations of top of roadway are at ℄ Girder

The D.L. Deflections given do not include the deflections due to D.L. of steel.

After all Girders have been assembled and falsework removed and before any concrete deck is poured, the Contractor shall take elevations along the top of steel at points where grade elevations are given. The difference between this elevation and the grade elevation shown, plus the amount of deflection shown at each point due to the D.L. of concrete, will be thickness "t" at these points (See detail).

The minimum thickness "t" shall not be less than 10.2" at the centerline of Girders. If the Girders have excessive camber and this minimum cannot be obtained, the grade shall be adjusted to obtain this thickness. The 10.2" minimum "t" includes the 8" deck slab plus a minimum 2.2" haunch over the girder flange at ℄ girder.

REVISION NUMBER	SHEET NUMBER	REVISIONS	DATE	BY

MOOREFIELD INTERCHANGE BRIDGE

PROJECT NO. X316-H-100.40 06 HARDY COUNTY

CAMBER DIAGRAM
ROADWAY ELEVATIONS

DESIGNED BY	JF	DRAWN BY	RWK	INKED BY	RWK JD	DATE	SHEET NO.
CHECKED BY	JCG	CHECKED BY	SLN	CHECKED BY	WJR	SCALE As Noted	S15 of S45

JOHN C. GIESE ENGINEERS, INC.
CONSULTING ENGINEERS CLARKSBURG, W. VA.

10443

PUBLIC ROADS DIV.	STATE DIST. NO.	STATE PROJ. NO.	FEDERAL PROJ. NO.	FISCAL YEAR	COUNTY	SHEET NO.	TOTAL SHEETS
WV	5	X316 -H- 100.40 06	APD 0464 (251)C		HARDY	248	670

INTERIOR GIRDERS

LOCATION IN SPAN 1 (ft)	SECTION LOCATION	YIELD STRENGTH (ksi)	TOP FLANGE THICKNESS (in)	BOTTOM FLANGE THICKNESS (in)	WEB DEPTH (in)	WEB THICKNESS (in)	NON-COMPOSITE S-TOP FLANGE (in^3)	NON-COMPOSITE S-BOTTOM FLANGE (in^3)	3n COMPOSITE S-TOP FLANGE (in^3)	3n COMPOSITE S-BOTTOM FLANGE (in^3)	In COMPOSITE S-TOP FLANGE (in^3)	In COMPOSITE S-BOTTOM FLANGE (in^3)	DESIGN MOMENT AND SHEAR-SERVICE FORCES DL1 MOMENT (k-ft)	DL1 SHEAR (k)	DL2 MOMENT (k-ft)	DL2 SHEAR (k)	LL+I MOMENT (k-ft)	LL+I SHEAR (k)
0	A	50	1.125	1.25	65.5	0.625	1978	2311	4672	2733	11037	2967	0	106	0	21	-	111
63	B	50	1.125	1.25	65.5	0.625	1978	2311	4672	2733	11037	2967	3332	-	689	0	3323	42
97	FSI	50	1.125	1.25	65.5	0.625	1978	2311	4672	2733	11037	2967	2399	-78	492	-11	2395	-76
126	C	50	1.125	1.25	65.5	0.625	1978	2311	4672	2733	11037	2967	0	-106	0	-21	-	-111

EXTERIOR GIRDERS

LOCATION IN SPAN 1 (ft)	SECTION LOCATION	YIELD STRENGTH (ksi)	TOP FLANGE THICKNESS (in)	BOTTOM FLANGE THICKNESS (in)	WEB DEPTH (in)	WEB THICKNESS (in)	NON-COMPOSITE S-TOP FLANGE (in^3)	NON-COMPOSITE S-BOTTOM FLANGE (in^3)	3n COMPOSITE S-TOP FLANGE (in^3)	3n COMPOSITE S-BOTTOM FLANGE (in^3)	In COMPOSITE S-TOP FLANGE (in^3)	In COMPOSITE S-BOTTOM FLANGE (in^3)	DESIGN MOMENT AND SHEAR DL1 MOMENT (k-ft)	DL1 SHEAR (k)	DL2 MOMENT (k-ft)	DL2 SHEAR (k)	LL+I MOMENT (k-ft)	LL+I SHEAR (k)
0	A	50	1.125	1.25	65.5	0.625	1978	2311	4672	2733	11037	2967	-	91	-	21	-	98
63	B	50	1.125	1.25	65.5	0.625	1978	2311	4672	2733	11037	2967	2856	-	680	-	2990	37
97	FSI	50	1.125	1.25	65.5	0.625	1978	2311	4672	2733	11037	2967	2056	-70	488	-12	2190	-67
126	C	50	1.125	1.25	65.5	0.625	1978	2311	4672	2733	11037	2967	-	-91	-	-21	-	-98

INTERIOR GIRDERS

LOCATION IN SPAN 1 (ft)	SECTION LOCATION	UNFACTORED VALUES HS20 LL+I MOMENT (k-ft)	HS20 LL+I SHEAR (k)	H20 LL+I MOMENT (k-ft)	H20 LL+I SHEAR (k)	3S2 LL+I MOMENT (k-ft)	3S2 LL+I SHEAR (k)	T3 LL+I MOMENT (k-ft)	T3 LL+I SHEAR (k)
0	A	-	70	-	68	-	76	-	59
63	B	2048	32	1892	24	2211	33	1755	29
97	FSI	1476	-52	1363	-53	1643	-55	1291	-44
126	C	-	-70	-	-50	-	-76	-	-59

EXTERIOR GIRDERS

LOCATION IN SPAN 1 (ft)	SECTION LOCATION	HS20 LL+I MOMENT (k-ft)	HS20 LL+I SHEAR (k)	H20 LL+I MOMENT (k-ft)	H20 LL+I SHEAR (k)	3S2 LL+I MOMENT (k-ft)	3S2 LL+I SHEAR (k)	T3 LL+I MOMENT (k-ft)	T3 LL+I SHEAR (k)
0	A	-	55	-	55	-	61	-	47
63	B	1649	31	1523	19	1780	27	1413	23
97	FSI	1469	-33	1097	-35	1322	-45	1039	-36
126	C	-	-55	-	-55	-	-61	-	-47

RATING	HS20	H20	3S2	T3
OR	2.2	2.4	2.0	2.6
IR	1.3	1.4	1.2	1.5

RATING FACTORS

RATING	HS20	H20	3S2	T3
OR	79	48	72	65
IR	47	28	43	37

LOAD RATING – TONS

NOTES:

1. If significant section loss has occurred, recalculate the girder section properties to reflect those losses.
2. The top flange is 20-inches wide and the bottom flange is 24-inches wide.
3. All steel has a yield strength of 50 ksi.
4. Load the lanes with the rating vehicle and the lane loads.
5. DL1 moment and shear is due to the weight of the steel girders, crossframes and details, structural deck concrete, haunches and stay-in-place forms. These force effects are resisted by the non-composite girder.
6. DL2 moment and shear is due to the weight of the parapets and future wearing surface. These force effects are resisted by the composite girder.
7. LL+I moments and shears provided are critical (maximum) forces at the specific location.

LEGEND:

M = Primary bending moment (k-ft)
F_b = Primary bending stress (ksi)
F_{bu} = Yield Stress (ksi)

RATING EXAMPLE:

This sample calculation is performed at section "B" of an interior girder, bottom flange:

1. Obtain the primary LL+I moment for the rating vehicle using a line girder analysis with a live load distribution factor = 1 lane (2 wheels).

2. Using the primary dead load moments from the table and the section moduli provided in the table, calculate the primary bending stresses.

The primary bending stresses (f_b) = M / S_b:

$(f_b)_{DL1} = M_{DL1}(12) / S_{bn}$
$(f_b)_{DL2} = M_{DL2}(12) / S_{3n}$
$(f_b)_{LL+I} = M_{LL+I}(12) / S_n$

3. Calculate the Operating and Inventory Rating Factors as follows. F_{bu} = 50 ksi.

$$OR = \frac{F_{bu} - 1.3(f_b)_{DL1} - 1.3(f_b)_{DL2}}{1.3(f_b)_{LL+I}}$$

IR = 3/5 OR

4. Calculate the Rating:

OR = Rating Factor x Gross Vehicle Weight

IR = Rating Factor x Gross Vehicle Weight

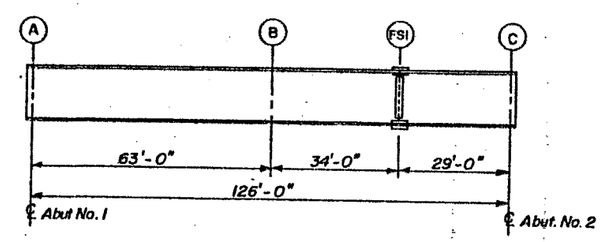

GIRDER ELEVATION
N.T.S.

REVISION NUMBER	SHEET NUMBER	REVISIONS	DATE	BY

MOOREFIELD INTERCHANGE BRIDGE

PROJECT NO. X316-H-100.40 06 HARDY COUNTY

LOAD RATING
SECTION PROPERTIES

DESIGNED BY	JF	DRAWN BY	SLN	INKED BY	SLN	DATE	SHEET NO.
CHECKED BY	JCG	CHECKED BY	WJR	CHECKED BY	JD	SCALE NONE	S16 of S45

JOHN C. GIESE ENGINEERS, INC.
CONSULTING ENGINEERS CLARKSBURG, W. VA.

10443

PUBLIC ROADS DIV.	STATE DIST. NO.	STATE PROJ. NO.	FEDERAL PROJ. NO.	FISCAL YEAR	COUNTY	SHEET NO.	TOTAL SHEETS
WV	5	X316 -H- 100.40	APD 0494 (251)C 06		HARDY	249	670

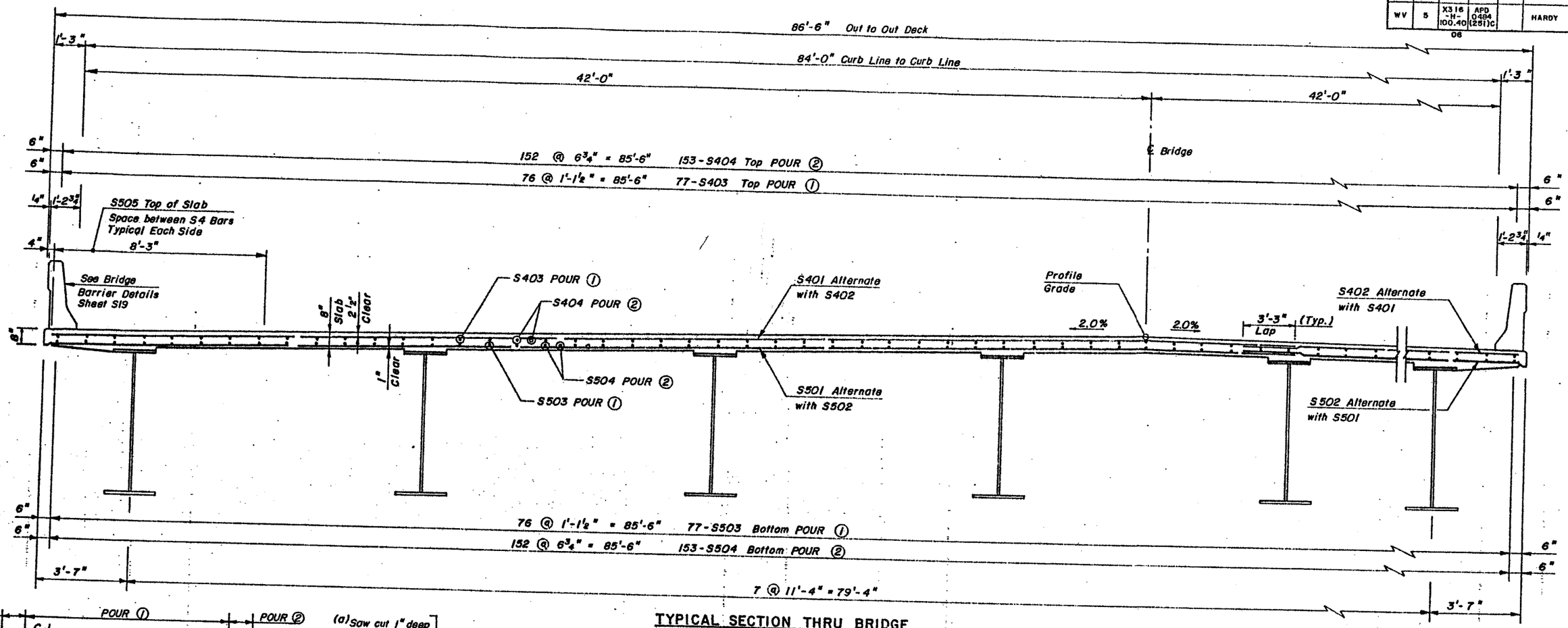

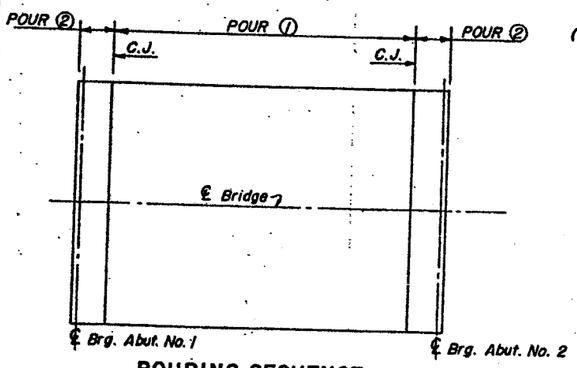

POURING SEQUENCE
N.T.S.

NOTES FOR POURING SEQUENCE

Identically numbered pours may be made simultaneously or separately. No. 1 Pour shall be completed before making No. 2 Pours. No change in Pouring sequence will be permitted.

Concrete in No. 1 Pour must be minimum of 2000 P.S.I. before making No. 2 Pours.

No. 2 Pours are to be made monolithic with Abutment above top of Cap as shown on Abutment Details.

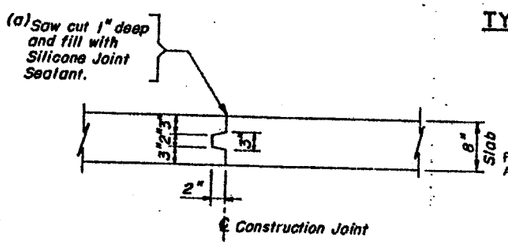

TRANSVERSE CONSTRUCTION JOINT DETAIL
N.T.S.

(a) There is no separate payment for Silicone Joint Sealant and all costs shall be included in the bid price for Item 601009-001 Class H Concrete.

TYPICAL SECTION THRU BRIDGE
POURS 1 & 2 AS NOTED

Scale: ½" = 1'-0"

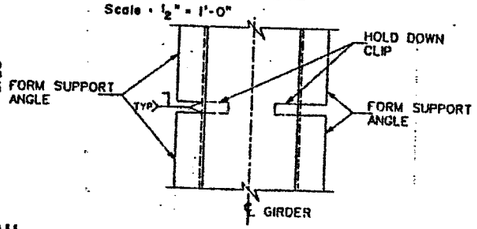

PLAN
NOT TO SCALE

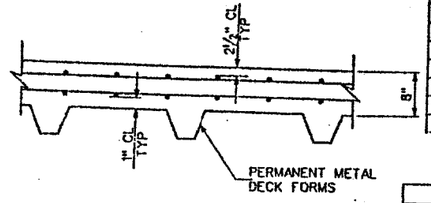

SECTION B-B
NOT TO SCALE

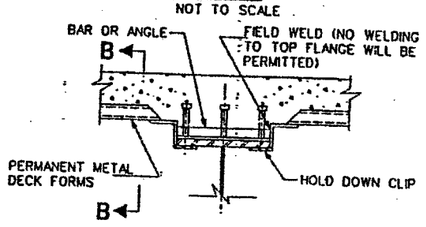

STAY-IN-PLACE FORM HAUNCH DETAIL
NOT TO SCALE

REFERENCES	Sheet No.
Concrete Deck Plan	S18
Deck & Barrier Wall Details	S19
Approach Roadway Barriers	S20
Bicycle Rail Post Spacing	S21
Barrier Joint Spacing	S21

REVISION NUMBER	SHEET NUMBER	REVISIONS	DATE	BY

MOOREFIELD INTERCHANGE BRIDGE

PROJECT NO. X316-H-100.40 06 HARDY COUNTY

TYPICAL SECTION THRU BRIDGE POURING SEQUENCE

DESIGNED BY	JCG	DRAWN BY	SLN	INKED BY	RWK	DATE	SHEET NO.
CHECKED BY	WJR	CHECKED BY	WJR	CHECKED BY	WJR	SCALE As Noted	S17 of S45

JOHN C. GIESE ENGINEERS, INC.
CONSULTING ENGINEERS CLARKSBURG, W. VA.

10443

PUBLIC ROADS DIV.	STATE DIST. NO.	STATE PROJ. NO.	FEDERAL PROJ. NO.	FISCAL YEAR	COUNTY	SHEET NO.	TOTAL SHEETS
WV	5	X316 -H- 100.40 06	APD 0484 (251)C		HARDY	250	670

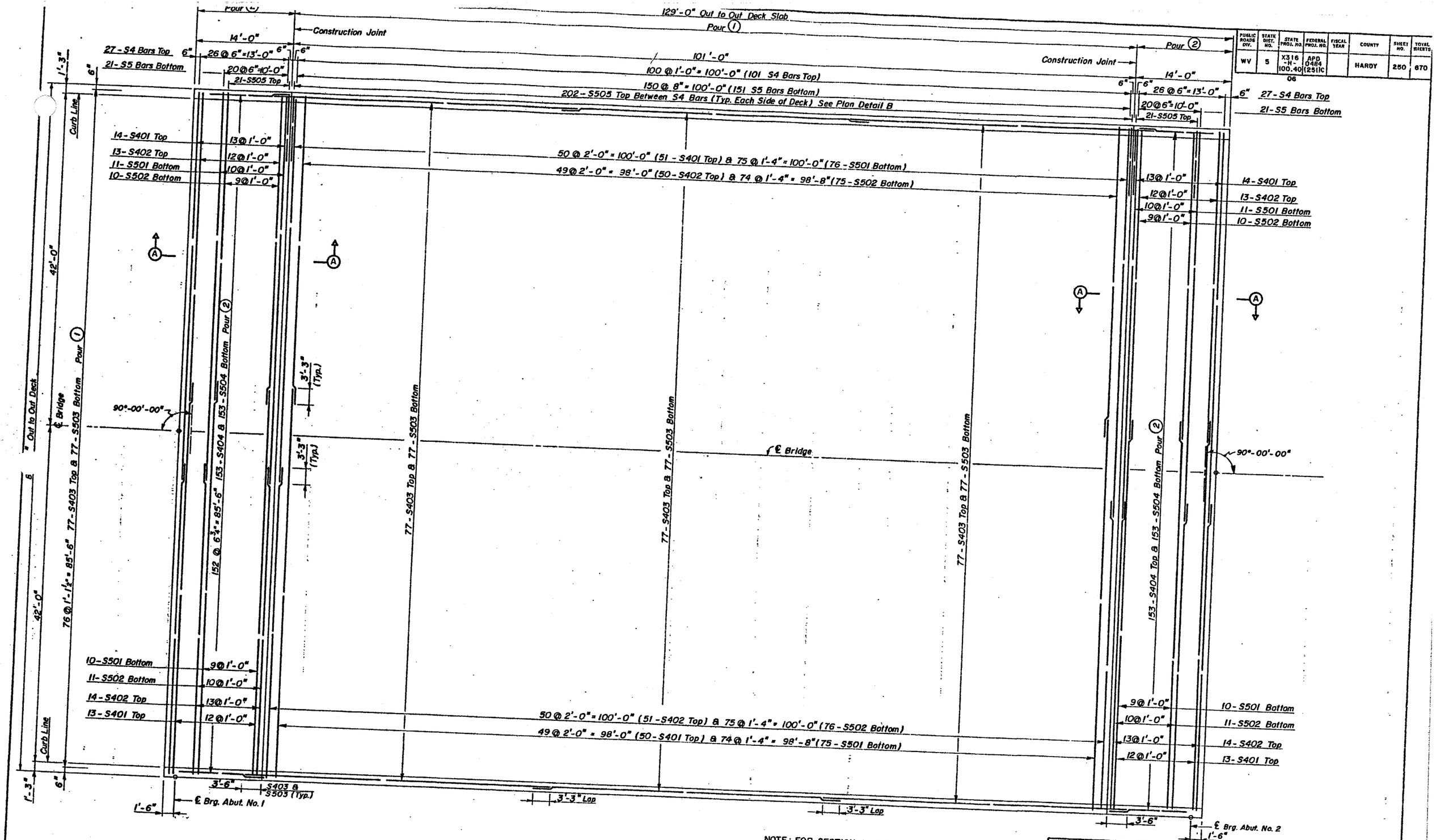

NOTE: FOR SECTION A-A & PLAN-DETAIL B, SEE SHEET S19.

PLAN - CONCRETE DECK

N.T.S.

REVISION NUMBER	SHEET NUMBER	REVISIONS	DATE	BY

MOOREFIELD INTERCHANGE BRIDGE

PROJECT NO. X316-H-100.40 06 HARDY COUNTY

CONCRETE DECK PLAN

SHEET NO. S18 of S45

10443

PUBLIC ROADS DIV.	STATE DIST. NO.	STATE PROJ. NO.	FEDERAL PROJ. NO.	FISCAL YEAR	COUNTY	SHEET NO.	TOTAL SHEETS
WV	5	X316 -H- 100.40 06	APD 0484 (251)C		HARDY	251	670

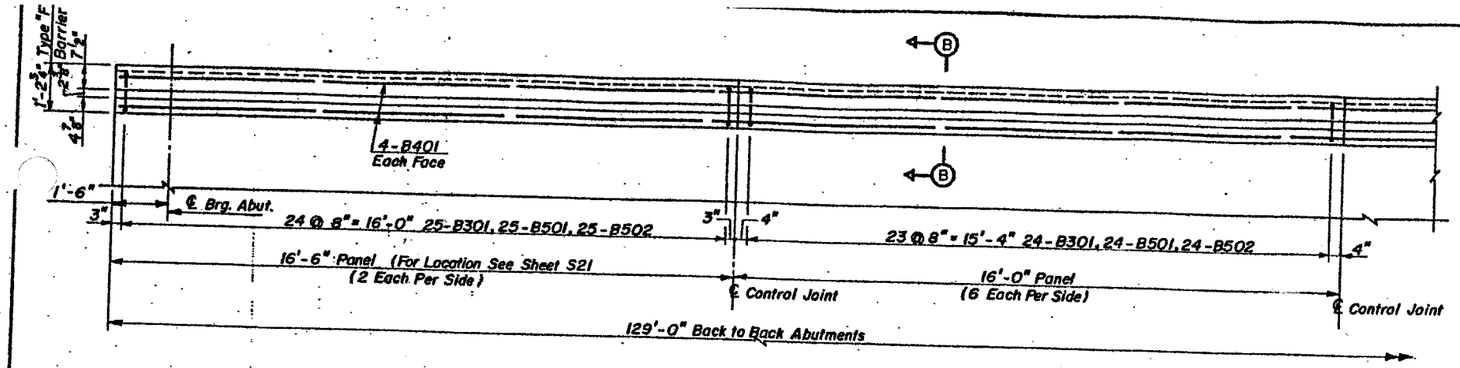

PLAN - BRIDGE BARRIER WALL

Scale: ½" = 1'-0"

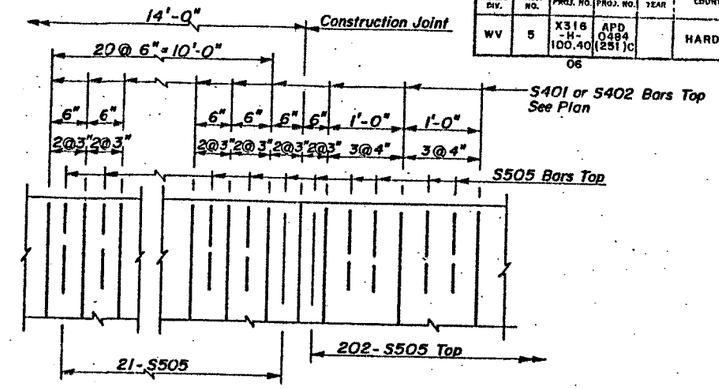

PLAN - DETAIL "B"

N.T.S.

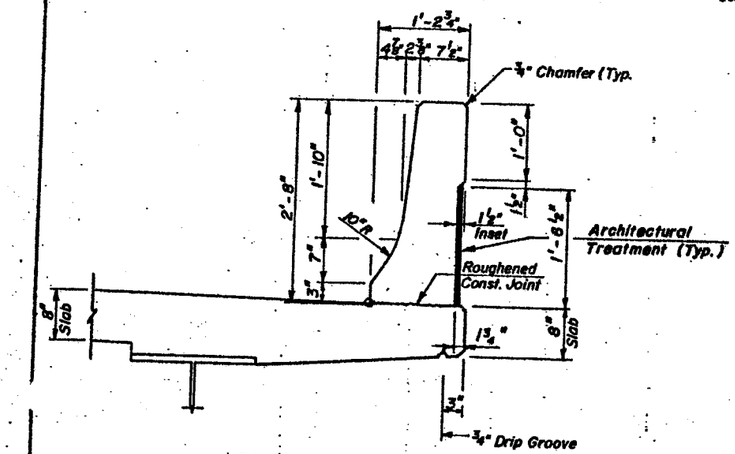

DIMENSIONS

Scale: 1" = 1'-0"

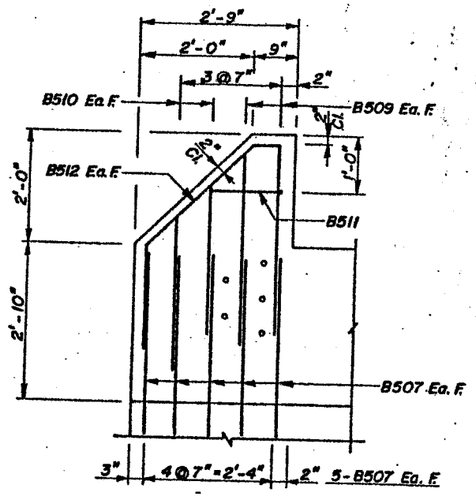

SECTION E-E

END POST REINFORCING

Scale: ¾" = 1'-0"

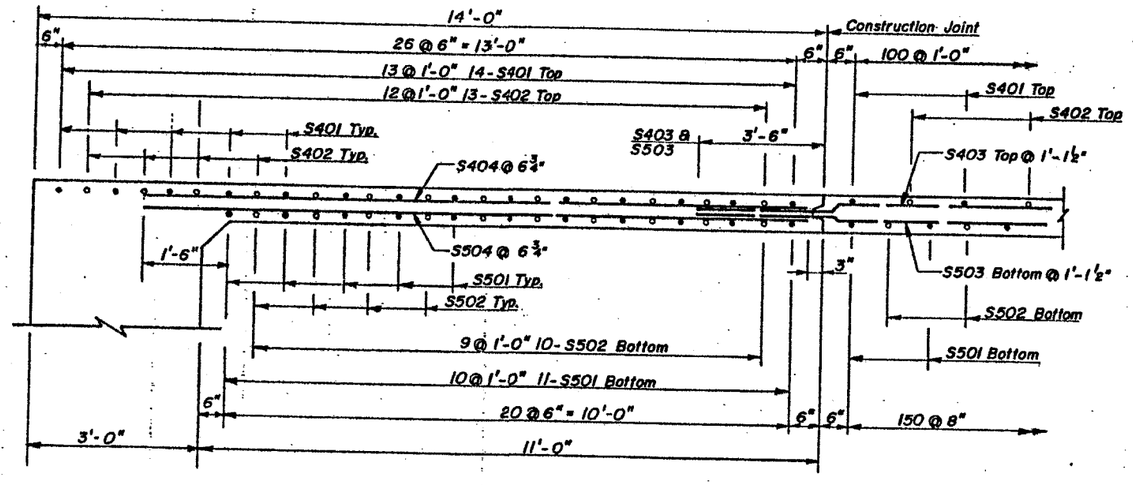

SECTION A-A

Scale: ¾" = 1'-0"

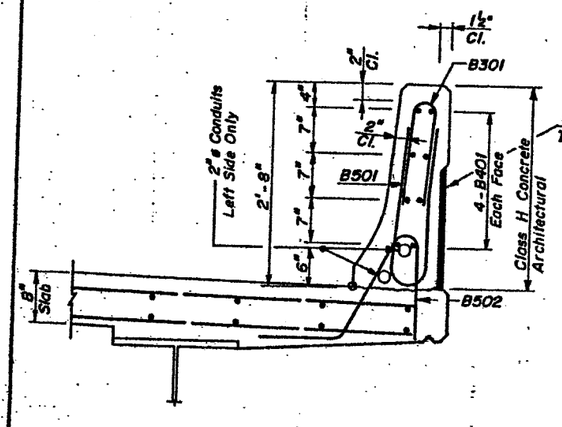

REINFORCING

Scale: 1" = 1'-0"

BRIDGE BARRIER DETAILS - SECTION B-B

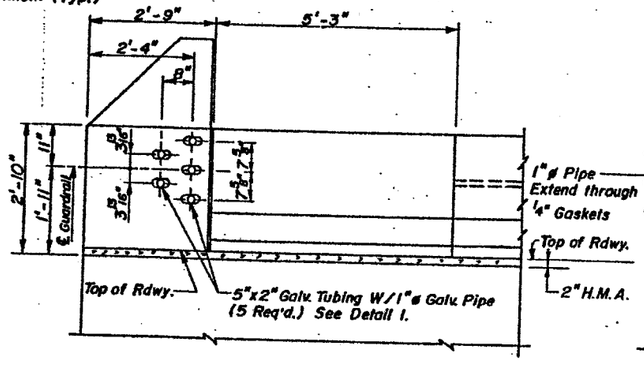

ELEVATION

DETAIL - GUARDRAIL ATTACHMENT

N.T.S.

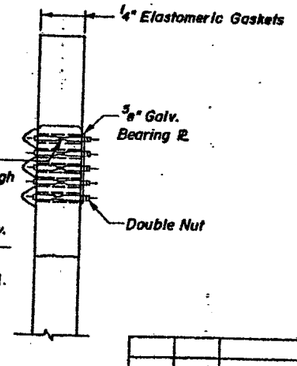

DETAIL I

GUARDRAIL CONNECTION

Connect the Thrie Beam Terminal plate and 5/8" Bearing Plate with 7/8" dia. bolts and two nuts. Tightened first nut against bearing plate and second nut against first nut to prevent nuts from loosening. Center the bolts in the 5" x 2" tubing.

All galvanization shall be in accordance with AASHTO M111.

The galvanized tubing shall be furnished and installed by Bridge Contractor. All other materials required for the guardrail connection are included in Roadway Items

There is no separate payment for furnishing and installing the galvanized tubing and all cost shall be included in Item 601009-003, Class H Concrete, Architectural.

REVISION NUMBER	SHEET NUMBER	REVISIONS	DATE	BY

MOOREFIELD INTERCHANGE BRIDGE

PROJECT NO. X316-H-100.40 06 HARDY COUNTY

DECK AND BARRIER WALL DETAILS

DESIGNED BY	JCG	DRAWN BY	JCG WJR	INKED BY	SLN	DATE	SHEET NO.
CHECKED BY	WJR	CHECKED BY	WJR	CHECKED BY	WJR	SCALE AS NOTED	S19 of S45

JOHN C. GIESE ENGINEERS, INC.
CONSULTING ENGINEERS CLARKSBURG, W. VA.

10443

PUBLIC ROADS DIV.	STATE DIST. NO.	STATE PROJ. NO.	FEDERAL PROJ. NO.	FISCAL YEAR	COUNTY	SHEET NO.	TOTAL SHEETS
WV	5	X316 -H- 100.40	APD 0484 (251)C		HARDY	252	6

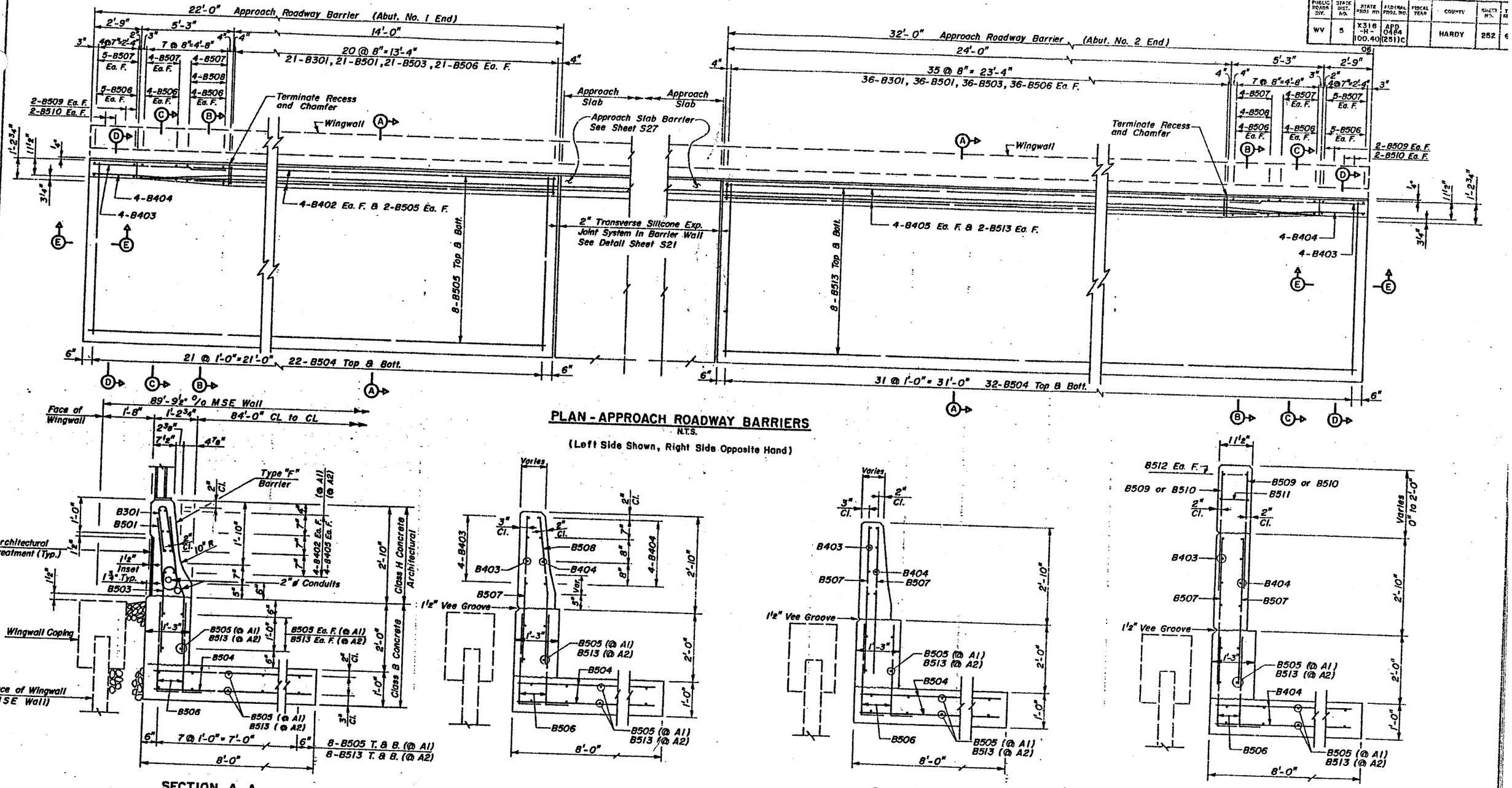

PLAN - APPROACH ROADWAY BARRIERS

N.T.S.

(Left Side Shown, Right Side Opposite Hand)

SECTION A-A

Scale : ¾" = 1'-0"

SECTION B-B

Scale : ¾" = 1'-0"

SECTION C-C

Scale : ¾" = 1'-0"

For Section E-E See Sheet S19.

SECTION D-D

Scale : ¾" = 1'-0"

ESTIMATED QUANTITIES - APPROACH ROADWAY BARRIERS

Item No.	Description	South Approach	North Approach	Total
601002-001	Class B Concrete	17.00 CY	25.00 CY	42.00 CY
601009-003	Class H Concrete, Architectural	4.12 CY	5.75 CY	9.87 CY
602002-001	Epoxy Coated Reinforcing Steel Bar	3058 LB	4427 LB	7485 LB

REVISION NUMBER	SHEET NUMBER	REVISIONS	DATE	BY

MOOREFIELD INTERCHANGE BRIDGE

PROJECT NO. X316-H-100.40 06 HARDY COUNTY

APPROACH ROADWAY BARRIERS

DESIGNED BY	JCG	DRAWN BY	JCG	INKED BY	JD	DATE	SHEET NO
CHECKED BY	WJR	CHECKED BY	WJR	CHECKED BY	WJR	SCALE AS NOTED	S20 of S45

JOHN C. GIESE ENGINEERS, INC.
CONSULTING ENGINEERS

10443

PUBLIC ROADS DIV.	STATE DIST. NO.	STATE PROJ. NO.	FEDERAL PROJ. NO.	FISCAL YEAR	COUNTY	SHEET NO.	TOTAL SHEETS
WV	5	X316 -H- 100.40 06	APD 0484 (251)C		HARDY	253	670

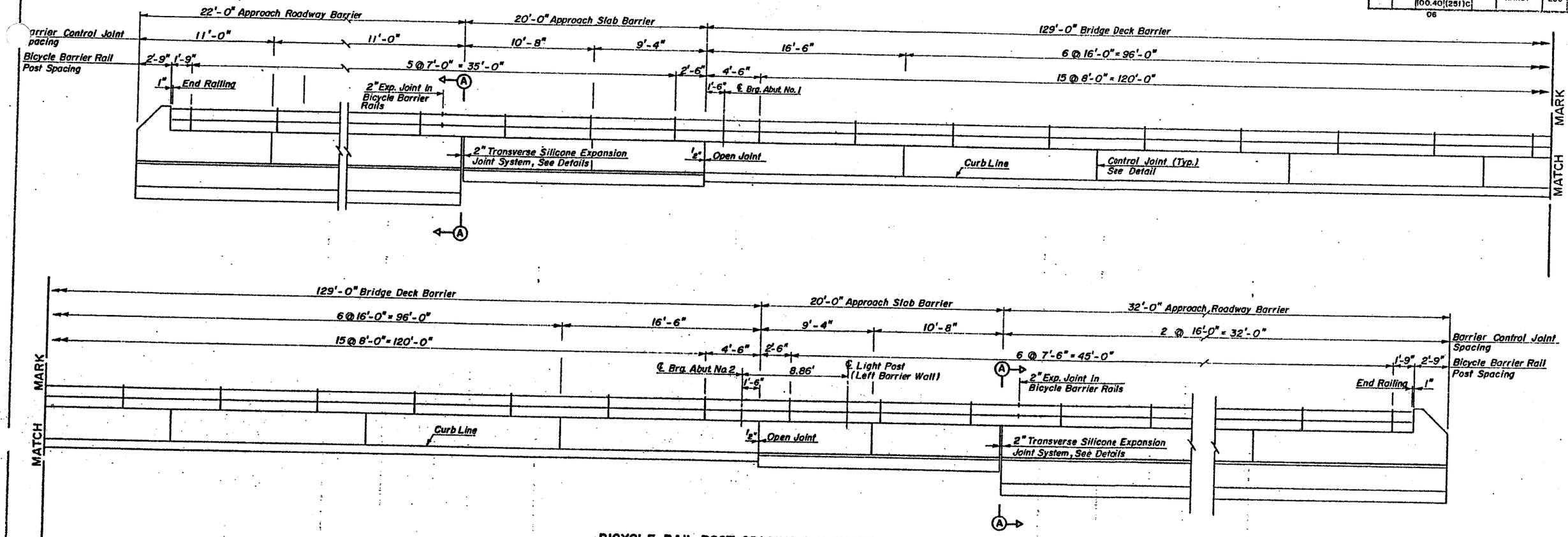

BICYCLE RAIL POST SPACING & BARRIER CONTROL JOINT SPACING

Scale: 1/4" = 1'-0"

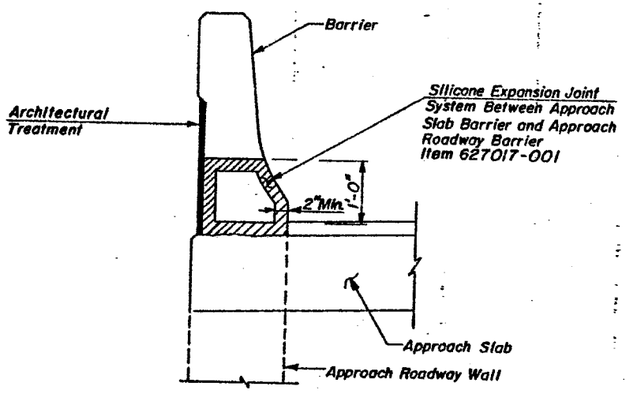

SECTION A-A
TRANSVERSE EXPANSION JOINT DETAIL

Scale: 1" = 1'-0"

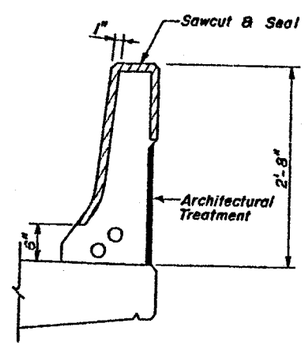

CONTROL JOINT DETAIL

Scale: 1" = 1'-0"

REVISION NUMBER	SHEET NUMBER	REVISIONS	DATE	BY

MOOREFIELD INTERCHANGE BRIDGE

PROJECT NO. X316-H-100.40 06 HARDY COUNTY

BICYCLE RAIL POST SPACING
BARRIER JOINT SPACING

DESIGNED BY	JCG	DRAWN BY	WJR	INKED BY	SLN	DATE	SHEET NO
CHECKED BY	WJR	CHECKED BY	JCG	CHECKED BY	WJR	SCALE AS NOTED	S21 of S45

JOHN C. GIESE ENGINEERS, INC.
CONSULTING ENGINEERS CLARKSBURG, W. VA.

10443

PUBLIC ROADS DIV.	STATE DIST. NO.	STATE PROJ. NO.	FEDERAL PROJ. NO.	FISCAL YEAR	COUNTY	SHEET NO.	TOTAL SHEETS
WV	5	X316 -H- 100.40	APD 0484 (251)C 06		HARDY	254	670

BILL OF REINFORCING STEEL BARS

MARK	TYPE	REMARK	NUMBER REQUIRED ABUTMENTS Abut. No. 1	Abut. No. 2	TOTAL	LENGTH UNIT	LENGTH TOTAL	DIMENSIONS a	b	c
A501	Str.	E.C.	36	36	72	44'-9"	3222.00			
A502	Str.		56	56	112	10'-6"	1176.00			
	E		16	16	32	8'-6"	272.00	2'-6"	3'-0"	3'-0"
	C		138	138	276	7'-0"	1932.00	3'-6"	3'-6"	
A505	Q		87	87	174	4'-4"	754.00	See Sketch		
A506	W.	E.C.	87	87	174	6'-0"	1044.00	See Sketch		
A601	E	E.C.	260	260	520	8'-0"	4160.00	2'-6"	2'-9"	2'-9"
A602	E	E.C.	69	69	138	15'-6"	2139.00	2'-6"	6'-6"	6'-6"
A801	Str.	E.C.	16	16	32	45'-3"	1448.00			
SUPERSTRUCTURE										
S401	Str.	E.C.			155	49'-4"	7646.67			
S402					155	39'-8"	6148.33			
S403					231	38'-2"	8816.50			
S404	Str.	E.C.			306	11'-9"	3595.50			
S501	Str.	E.C.			193	49'-4"	9521.33			
S502					193	39'-8"	7655.67			
S503					231	38'-2"	8816.50			
S504					306	11'-9"	3595.50			
S505	Str.	E.C.			488	8'-3"	4026.00			
BARRIER WALLS										
			Abut.#1 End	Abut.#2 End	Bridge Deck					
B301	R	E.C.	42	72	388	502	3'-1"	1547.83	See Sketch	
B401	Str.	E.C.			64	64	33'-8"	2154.67		
B402	Str.		16			16	15'-9"	252.00		
B403	Str.		8	8		16	7'-6"	120.00		
B404	G		8	8		16	7'-6"	120.00	See Sketch	
B405	Str.	E.C.		16		16	25'-9"	412.00		
B501	U	E.C.	42	72	388	502	4'-8½"	2363.58	See Sketch	
B502	Z				388	388	4'-7½"	1794.50	See Sketch	
B503	V		42	72		114	4'-10"	551.00	See Sketch	
B504	Str.		88	128		216	7'-6"	1620.00		
B505	Str.		40			40	21'-6"	860.00		
B506	C		136	196		332	3'-2"	1051.33	2'-7"	7"
B507	Str.		44	44		88	4'-3"	374.00		
B508	S		8	8		16	4'-3"	68.00	See Sketch	
B509	Str.		8	8		16	3'-5"	54.68		
B510	Str.		8	8		16	2'-9"	44.00		
B511	E		2	2		4	3'-1"	12.33	7" 1'-3"	1'-3"
B512	H		4	4		8	4'-10"	38.67		
B513	Str.	E.C.		40		40	31'-6"	1260.00	See Sketch	
BARS AT JUNCTION BOX										
JB301	R	E.C.			A2 A.S. 3	3	3'-1"	9.25	See Sketch	
JB401	Str.	E.C.			2	2	7'-9"	15.50		
JB501	NOT	USED								
JB502	X	E.C.			3	3	4'-8"	14.00	See Sketch	

BENDING DIAGRAM

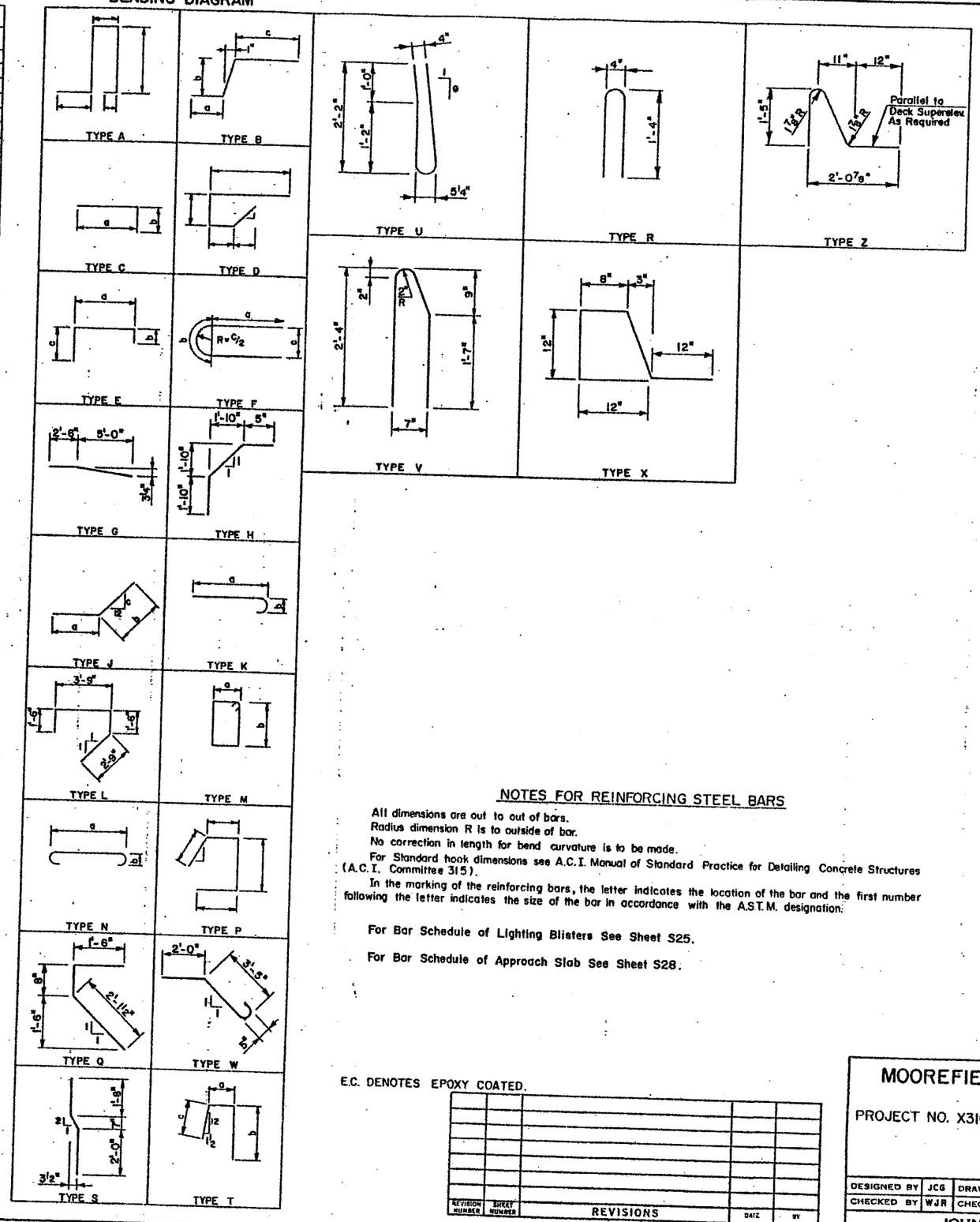

NOTES FOR REINFORCING STEEL BARS

All dimensions are out to out of bars.

Radius dimension R is to outside of bar.

No correction in length for bend curvature is to be made.

For Standard hook dimensions see A.C.I. Manual of Standard Practice for Detailing Concrete Structures (A.C.I. Committee 315).

In the marking of the reinforcing bars, the letter indicates the location of the bar and the first number following the letter indicates the size of the bar in accordance with the A.S.T.M. designation.

For Bar Schedule of Lighting Blisters See Sheet S25.

For Bar Schedule of Approach Slab See Sheet S28.

E.C. DENOTES EPOXY COATED.

REVISION NUMBER	SHEET NUMBER	REVISIONS	DATE	BY

MOOREFIELD INTERCHANGE BRIDGE

PROJECT NO. X316-H-100.40 06 HARDY COUNTY

BAR SCHEDULE

DESIGNED BY	JCG	DRAWN BY	JCG	INKED BY	JD	SHEET NO.
CHECKED BY	WJR	CHECKED BY	WJR	CHECKED BY	WJR	S22 of S45

JOHN C. GIESE ENGINEERS, INC.
CONSULTING ENGINEERS CLARKSBURG, W. VA.

10443

State Project No.	Federal Project No.	State Dist. No.	Fiscal Year	County	Sheet No.	Total Sheets
X316-H-100.40 06	APD 0484(251)C	5	2003	HARDY	255	670

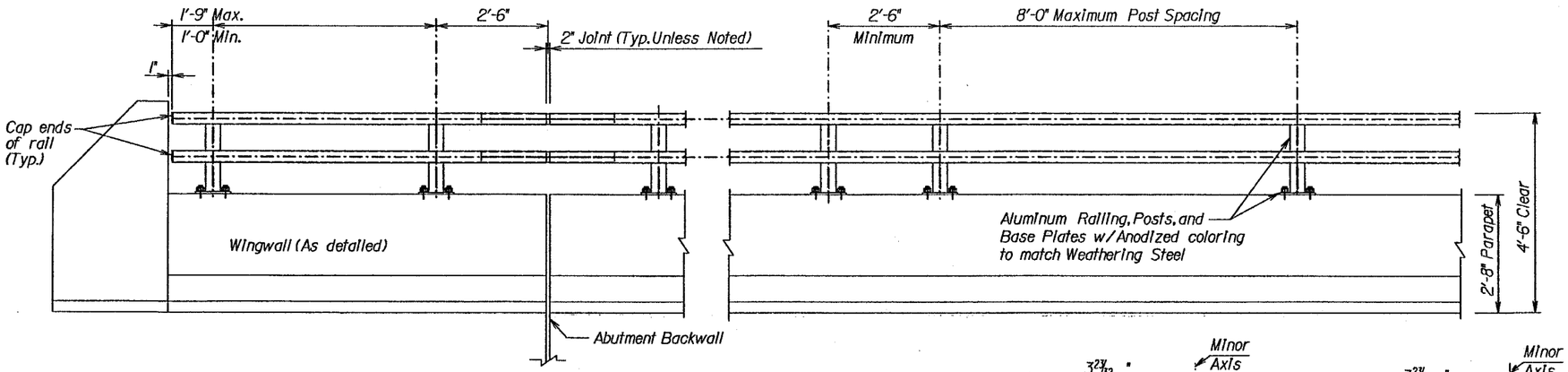

TYPICAL ELEVATION

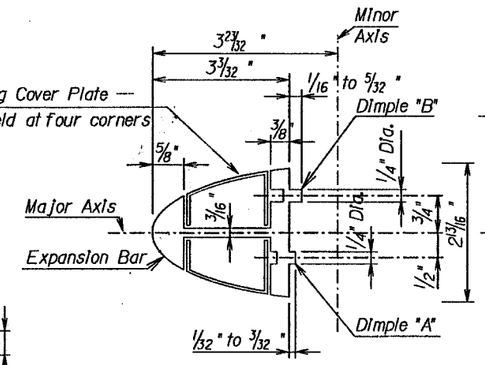

SECTION B–B (RAIL SPLICE)

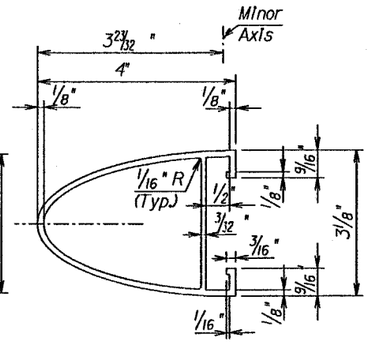

RAIL SECTION

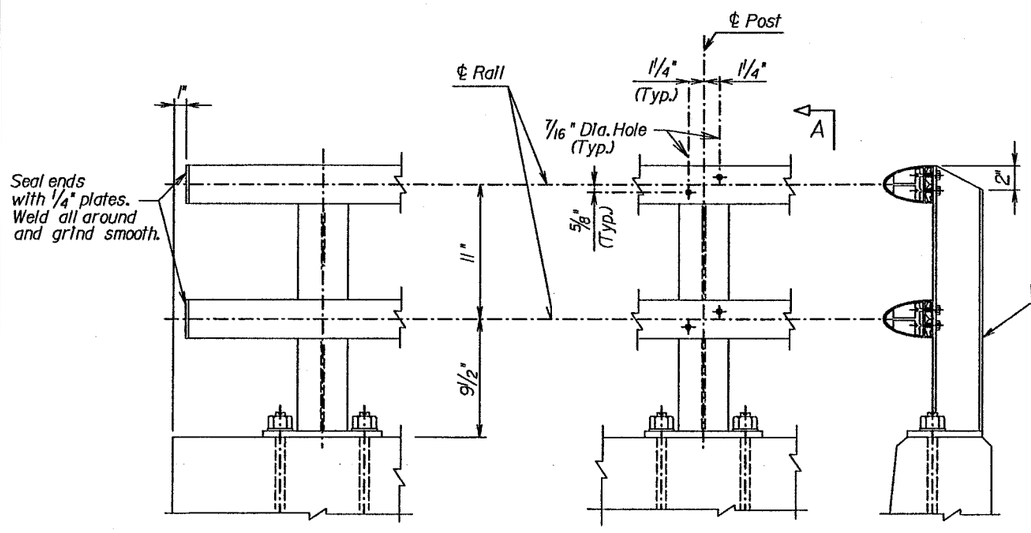

RAIL TERMINATION

POST AND RAIL CONNECTIONS

SECTION A–A

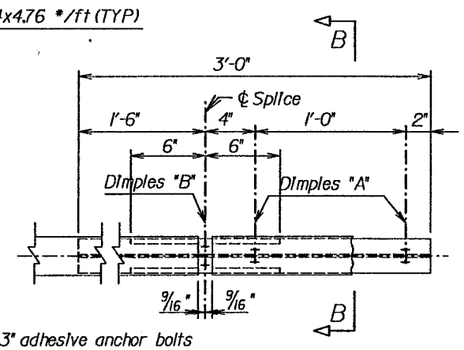

SPLICE SLEEVE

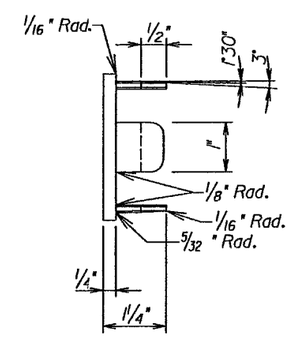

VIEW D–D

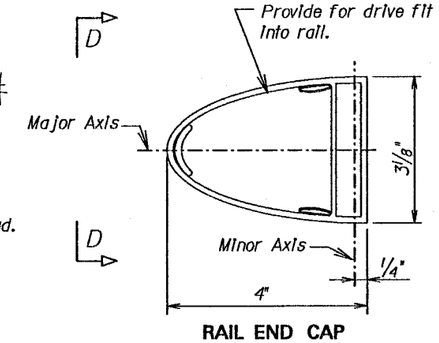

RAIL END CAP

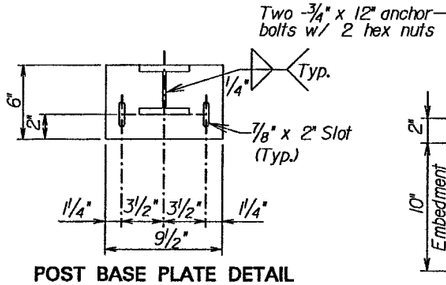

POST BASE PLATE DETAIL

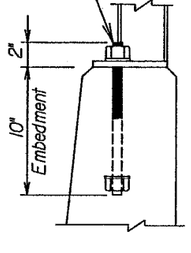

TYP. ANCHOR BOLT (CAST–IN–PLACE ALT.)

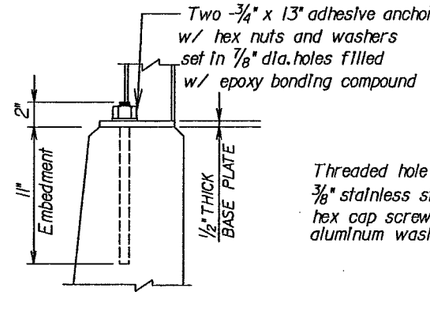

TYP. ANCHOR BOLT (DRILLED ALT.)

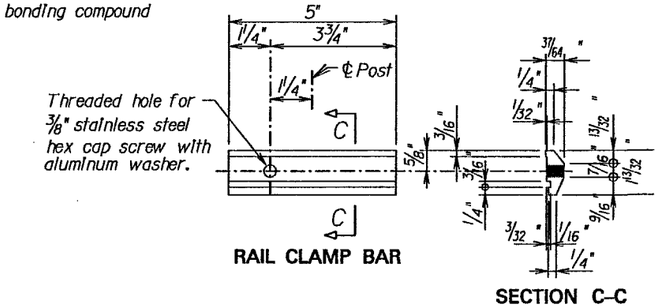

RAIL CLAMP BAR

SECTION C–C

NOTES:

Aluminum material shall be in accordance with Sections 709.31 through 709.41 of the Standard Specifictions.

Stainless steel bolts shall be in accordance with ASTM F593. Stainless steel nuts shall be in accordance with ASTM F594. Stainless steel washers shall be the same alloy as the bolts & nuts.

Anchor bolt assemblies shall be cast in place or drilled and grouted. All parts of the anchor bolt assembly shall be galvanized in accordance with AASHTO M111. In addition, the exposed portions of the anchor bolt assemblies shall be painted in accordance with the paint manufacturers recommendations. The color of the final top coat shall be 30045 in accordance with Federal Standard 595

All exposed sharp edges shall be rounded. All rough-cut ends and edges shall be ground or filed smooth.

Rail posts shall be set normal to the roadway grade.

Curved rails shall be shop fabricated to the radius.

Elastomeric bearing pads shall be placed under each post. The pad shall cover the entire contact area between the post and concrete and shall be neatly trimmed. The pads shall meet the requirements of Section 715.5.

Cost of anchor bolt assemblies, railposts, rails, hardware, anodized coloring, galvanizing, painting and elastomeric bearing pads shall be included in the unit price bid for item 617003-001, Aluminum Railing, Anodized, per linear foot.

NO.	REVISION	DATE:	BY:

W. VA. DEPARTMENT OF TRANSPORTATION
DIVISION OF HIGHWAYS

MOOREFIELD INTERCHANGE BRIDGE

PROJECT NO. X316-H-100.40 06

BICYCLE BARRIER RAILING DETAILS

	DATE
DESIGNED JDD	06/03
DRAWN JMC	06/03
CHECKED PCM	06/03
CHECKED AJT	06/03

Baker
Michael Baker Jr., Inc. Charleston, W.Va.

SHEET S23 OF S45
BRIDGE NO. 10443

06:05:59 PM 10/08/
L:\PROJ\Corridor\16\Bridge\Moorefield Interchange\Final\DGN\Moorefieldint-Final-Aluminumrailing.dgn

PUBLIC ROADS DIV.	STATE DIST. NO.	STATE PROJ. NO.	FEDERAL PROJ. NO.	FISCAL YEAR	COUNTY	SHEET NO.	TOTAL SHEETS
WV	5	X316 -H- 100.40	APD 0484 (251)C		HARDY	256	670

06

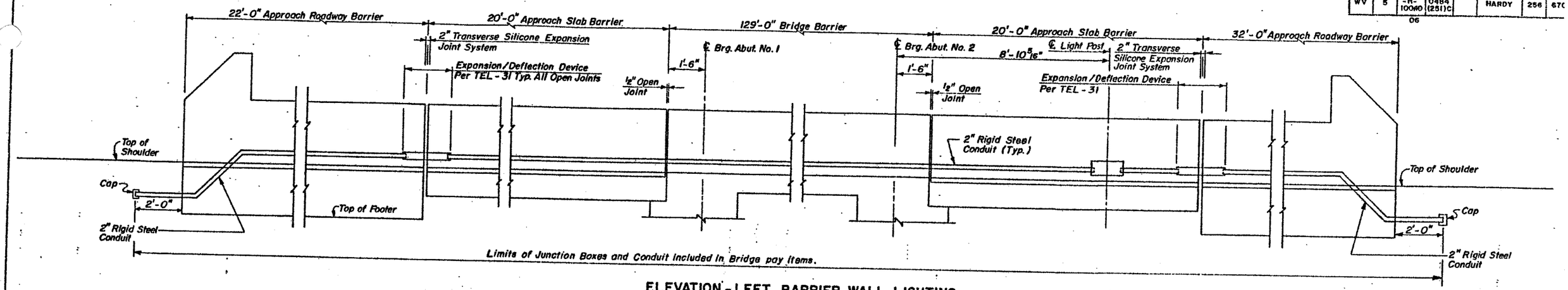

ELEVATION - LEFT BARRIER WALL LIGHTING

Scale: Horiz. N.T.S.
Vert. ½" = 1'-0"

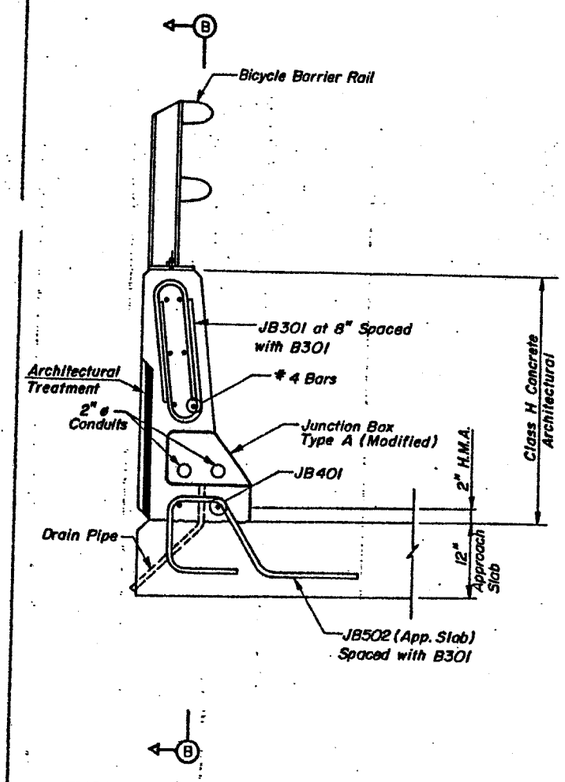

TYPICAL SECTION AT JUNCTION BOX

N.T.S.

LEFT SIDE ONLY.

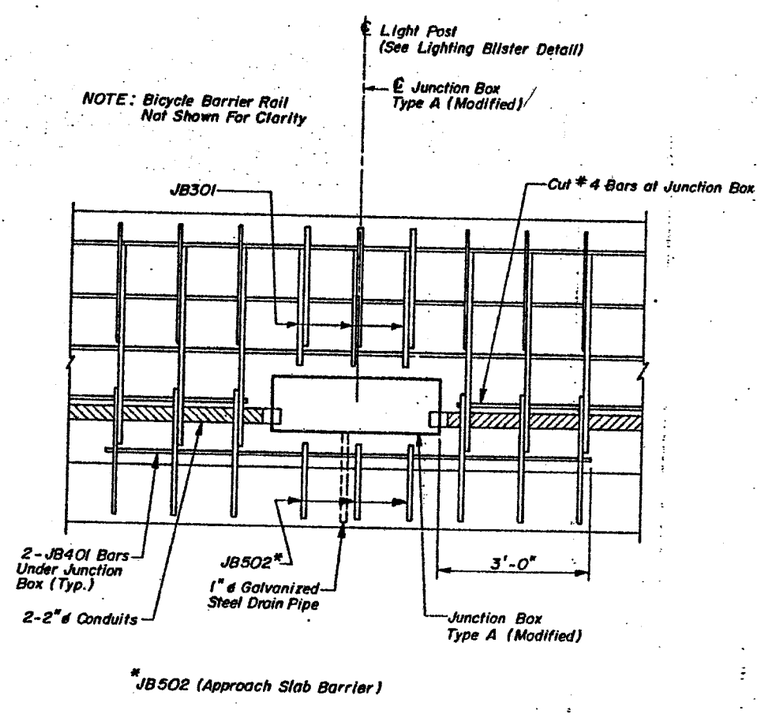

SECTION B-B

N.T.S.

GENERAL NOTES

The Contractor shall construct the reinforced lighting blister and shall furnish and install all 2" ø galvanized steel conduit, expansion/deflection devices, junction boxes and anchor bolts with nuts in accordance with the details shown on the plans.

There is no separate payment for furnishing and installing the anchor bolts for light post and all costs shall be included in the bid price for Item 601009-003, Class H Concrete, Architectural, per cubic yard.

The light pole, luminaries and cable are included in roadway pay items.

Class H Concrete, Architectural, and Epoxy Coated Reinforcing Bars in light blister are paid for under Item 601009-003 & Item 602002-001 respectively.

ESTIMATED QUANTITIES FOR LIGHTING

Item	Description	Unit	Quantity
662002-001	Galvanized Steel Conduit	LS	1
662006-001	Junction Box, Type A (Modified)	EA	1

FOR DETAILS OF LIGHTING BLISTER, SEE SHEET S25.
FOR DETAILS OF JUNCTION BOX TYPE A (MODIFIED), SEE SHEET S26.

REVISION NUMBER	SHEET NUMBER	REVISIONS	DATE	BY

MOOREFIELD INTERCHANGE BRIDGE

PROJECT NO. X316-H-100.40 06 — HARDY COUNTY

LIGHTING

DESIGNED BY	JCG	DRAWN BY	WJR	INKED BY	SLN	DATE	SHEET NO.
CHECKED BY	WJR	CHECKED BY	JCG	CHECKED BY	WJR	SCALE AS NOTED	S24 of S45

JOHN C. GIESE ENGINEERS, INC.
CONSULTING ENGINEERS — CLARKSBURG, W. VA.

10443

PUBLIC ROADS DIV.	STATE DIST. NO.	PROJECT NUMBERS STATE	PROJECT NUMBERS FEDERAL	FISCAL YEAR	COUNTY	SHEET NO.	TOTAL SHEETS
WV	5	X316-H-100.40 06	APD-0484(251)C		HARDY	257	670

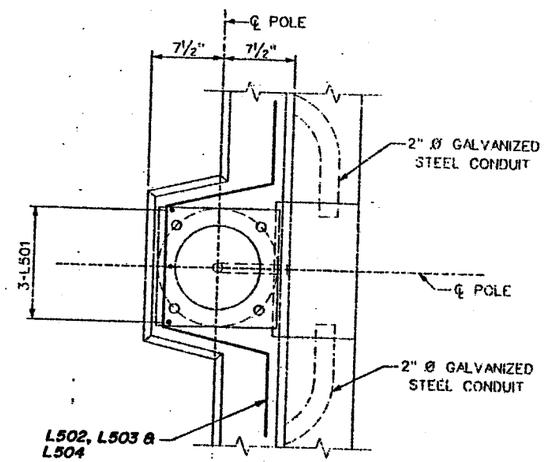

LIGHTING BLISTER PLAN

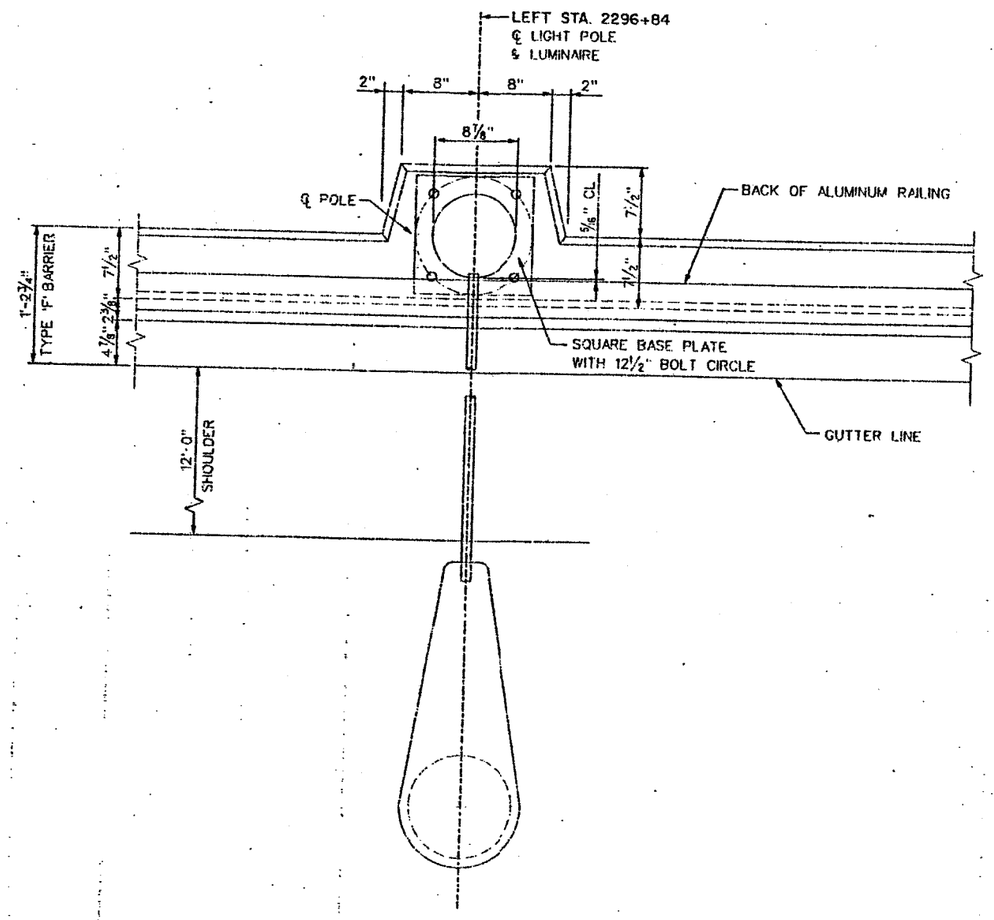

TYPICAL VIEW AT BARRIER ON APPROACH SLAB

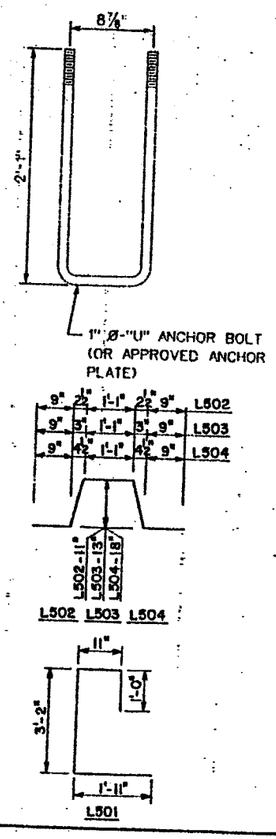

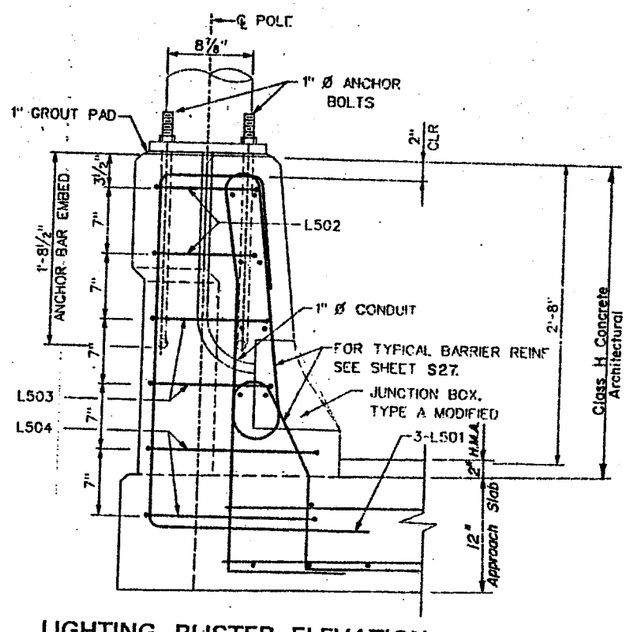

LIGHTING BLISTER ELEVATION

BAR SCHEDULE FOR LIGHTING BLISTER*						
Size	Mark	Remark	Number Required	Length Unit	Length Total	Weight (Lbs.)
5	L501	E.C.	3	7'-0"	21'-0"	22
5	L502	E.C.	2	4'-6"	9'-0"	9
5	L503	E.C.	2	4'-10"	9'-8"	10
5	L504	E.C.	2	5'-8"	11'-4"	12
TOTAL WEIGHT						53

*Reinforcing Bars are Paid for under Item 602002-001

NOTES:

1. 2-2" Ø GALVANIZED STEEL CONDUIT THROUGH BARRIER NOT SHOWN FOR CLARITY.
2. ANCHOR BOLTS SHALL COMPLY WITH SECTION 662.2 13.1.6 OF THE SPECIFICATIONS.
3. FOR TYPE A MODIFIED JUNCTION BOX DETAILS SEE SHEET S26.
4. FOR REINFORCING AT JUNCTION BOX SEE SHEET S24.

6 0 6 INCHES

NO.	REVISION	DATE:	BY:

DESIGNED AJT	DATE 05/02	
DRAWN JLH	05/02	
CHECKED AP	05/02	
CHECKED AJT	05/02	

W. VA. DEPARTMENT OF TRANSPORTATION
DIVISION OF HIGHWAYS

MOOREFIELD INTERCHANGE BRIDGE

PROJECT NO. X316-H-100.40 06 HARDY COUNTY

LIGHTING BLISTER DETAILS

Baker
Michael Baker Jr., Inc. Charleston, W.Va.

SHEET NO. S25 of S45

BRIDGE NO. 10443

05/01/2001 PM 1:20:10
I:\proj\USS\Langlotz\Bridge\redrawing\Final\Lightingblister.dgn

PUBLIC ROADS DIV.	STATE DIST. NO.	PROJECT NUMBERS STATE	PROJECT NUMBERS FEDERAL	FISCAL YEAR	COUNTY	SHEET NO.	TOTAL SHEETS
WV	5	X316-H-100.40 06	APD-0484(251)C		HARDY	258	670

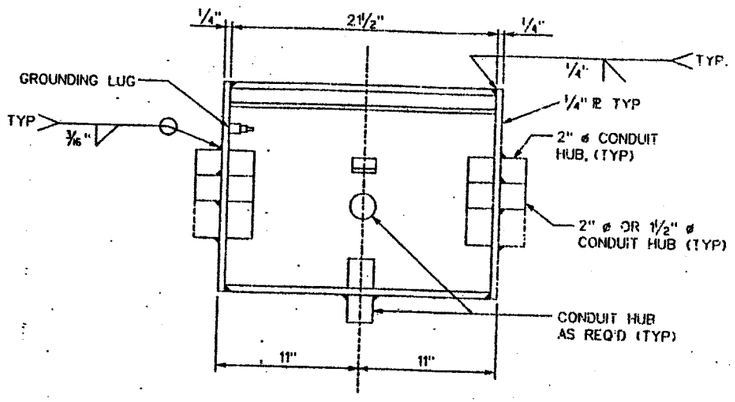

FRONT VIEW WITH COVER REMOVED

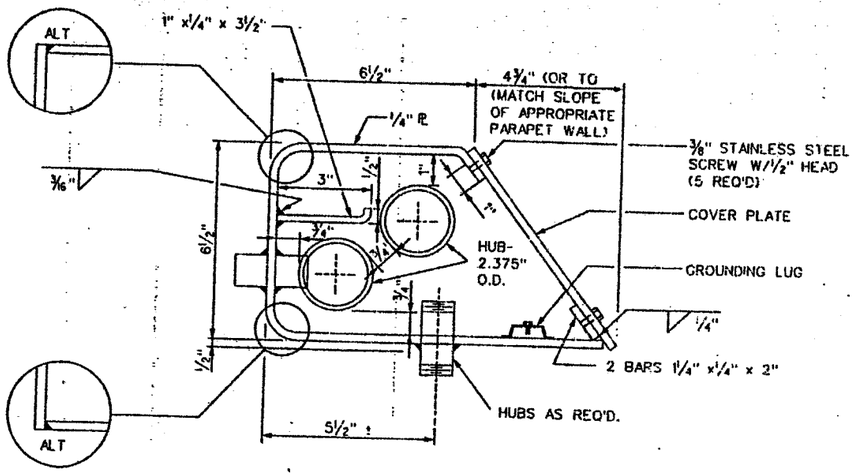

SIDE VIEW

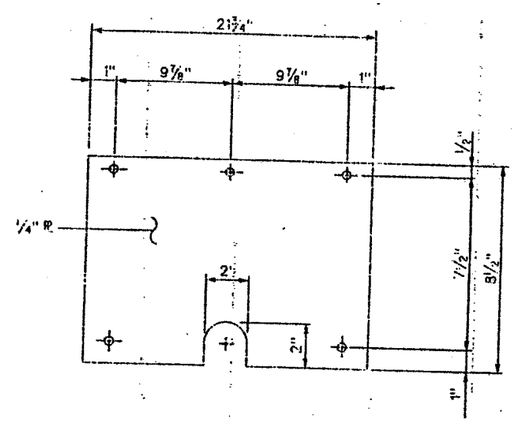

COVER PLATE

NOTES:

1. TYPE A BOX IS TO BE FABRICATED FROM STEEL CONFORMING TO AASHTO M270 GRADE 36 AND HOT-DIPPED GALVANIZED AFTER ASSEMBLY.
2. REINFORCING STEEL THAT CONFLICTS WITH TYPE A BOX SHALL BE APPROPRIATELY MODIFIED AS SHOWN ON THE BRIDGE PLANS OR AS DIRECTED BY THE ENGINEER.
3. CONDUIT NOT USED TO BE FIELD CAPPED.
4. JUNCTION BOX SHALL BE PROVIDED AT THE LOCATION SHOWN ON SHEET S24.

TYPE A (MODIFIED) JUNCTION BOX

NO.	REVISION	DATE:	BY:

W. VA. DEPARTMENT OF TRANSPORTATION
DIVISION OF HIGHWAYS

MOOREFIELD INTERCHANGE BRIDGE
PROJECT NO. X316-H-100.40 06 HARDY COUNTY
JUNCTION BOX DETAILS

TYPE A MODIFIED

DESIGNED AJT	DATE 05/02	
DRAWN SCG	05/02	
CHECKED MP	05/02	
CHECKED SKLAJT	05/02	

Baker
Michael Baker Jr., Inc. Charleston, W.Va.

SHEET NO. S26 of S45
BRIDGE NO. 10443

03/08/2003
J:\engian\Bridge\mainline\Final\junctionbox.dgn
n:\pro\U

PUBLIC ROADS DIV.	STATE DIST. NO.	STATE PROJ. NO.	FEDERAL PROJ. NO.	FISCAL YEAR	COUNTY	SHEET NO.	TOTAL SHEETS
WV	5	X316 -H- 100.40 06	APD 0464 (251)C		HARDY	259	670

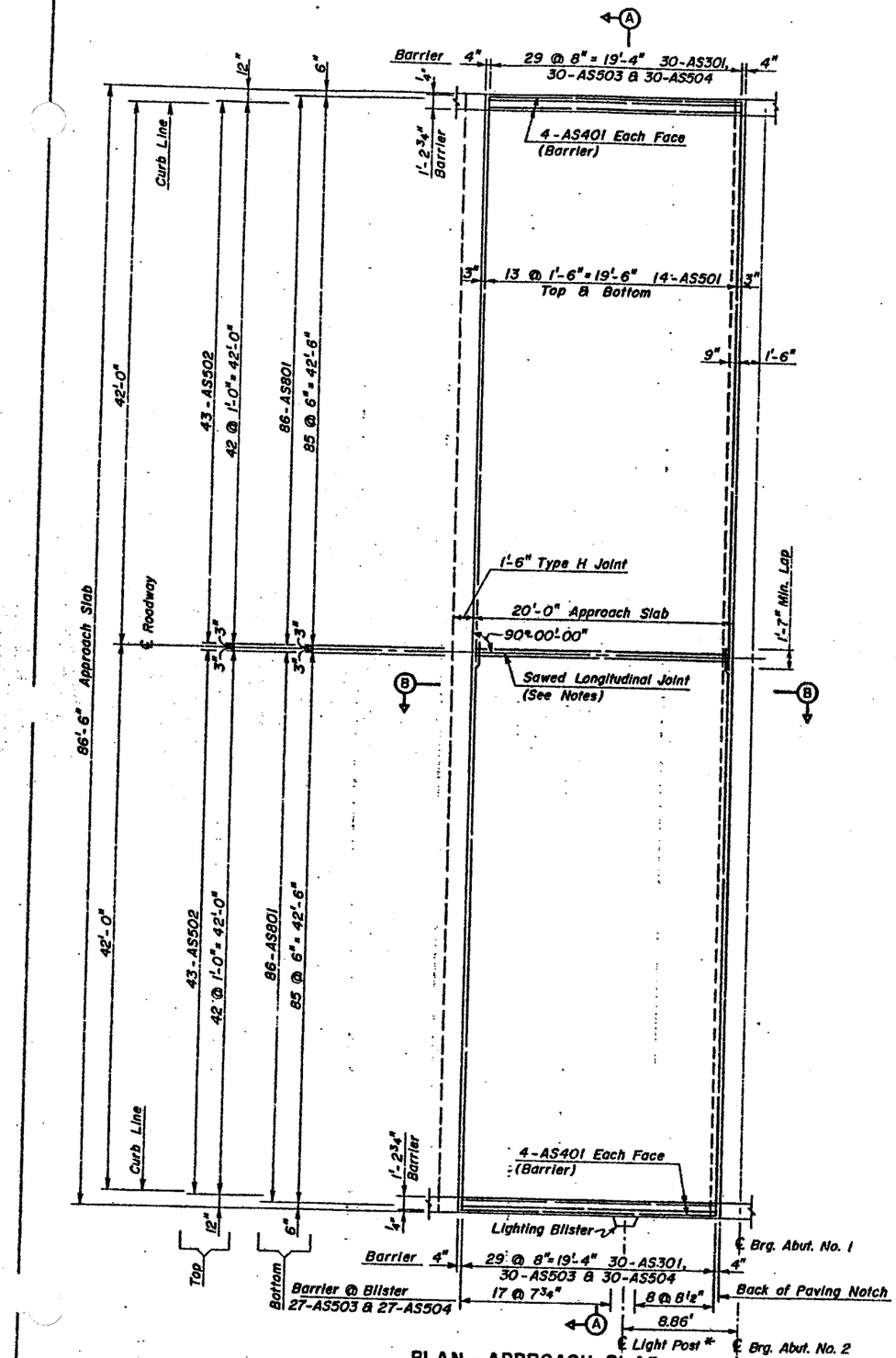

PLAN - APPROACH SLAB

ABUT. NO. 1 SHOWN; ABUT. NO. 2 SYMETRICAL BY 180° ROTATION

Scale : 3/16" = 1'-0"

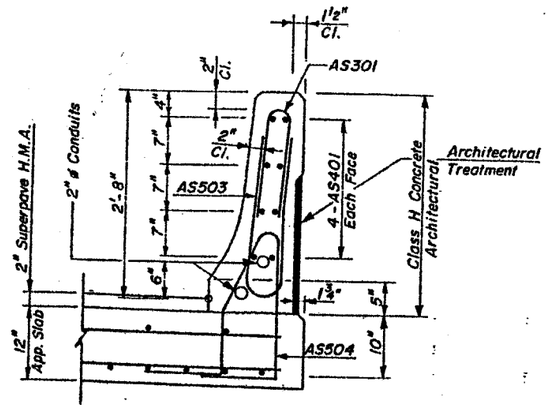

REINFORCING DETAIL

Scale : 1" = 1'-0"

NOTES FOR APPROACH SLABS

1. The Approach Slabs shall be in accordance with Section 502 of the Standard Specifications except as noted.
2. The Approach Slabs shall be paid for as 12 inch Portland Cement Approach Slab, Item 502001-012 per sq. yd. Method of Measurement and Basis of Payment shall be in accordance with Article 502.7 and Article 502.8 of the specifications.
3. Reinforcing shall conform to AASHTO M31 Grade 60.
4. Material for silicone joint sealant shall conform with Section 708.4 of the specifications.
5. Concrete shall be cured by burlap and water. The use of vapor barrier burlap will be permitted.
6. Crown shall conform to crown on bridge deck.
7. Base course material under the Approach Slabs shall be paid for under Item 311006-001, Open Graded Free Draining Base Course and shall be placed in accordance with the specifications.
8. Fine aggregate for Approach Slabs shall be silica sand.
9. All concrete in Approach Slabs shall be Class B concrete.
10. The Approach Slabs shall be primed with Bituminous Material and topped with 2" Superpaved Hot-Mix Asphalt Skid Resistant Pavement. Bituminous Material shall be in accordance with Item 408002-001.
11. All reinforcing steel bars in Approach Slabs shall be epoxy coated.
12. Approach Slabs shall have sawed longitudinal joint where shown on plans. The sawed joint shall be cut to a depth of 2" and a width of 1/4" with a tolerance of 1/16" and shall be sealed in accordance with Section 503.
13. There is no separate payment for bituminous material, reinforcing steel bars, sawing and sealing joints, and Polyethlene Sheet (Double Layer) and all costs shall be included in the bid price for Item 502001-012, 12 inch Portland Cement Concrete Approach Slab per sq. yd.
14. All concrete in Barriers on the Approach Slabs shall be Class H Concrete, Architectural.

FOR SECTIONS A-A & B-B, BAR SCHEDULE, ESTIMATE OF QUANTITIES AND PAY ITEMS (ROADWAY AND/OR BRIDGE), SEE SHEET S28

***NOTE**

Light Post on west side of Abut. No. 2 Approach Slab only. For location and details of conduit, junction box, lighting blister and reinforcing bars at blister, See Sheets S24, S25 & S26.

REVISION NUMBER	SHEET NUMBER	REVISIONS	DATE	BY

MOOREFIELD INTERCHANGE BRIDGE

PROJECT NO. X316-H-100.40 06 HARDY COUNTY

APPROACH SLABS

DESIGNED BY	JCG	DRAWN BY	JD	INKED BY	JD	DATE	SHEET NO.
CHECKED BY	WJR	CHECKED BY	RWK	CHECKED BY	WJR	SCALE AS NOTED	S27 of S45

JOHN C. GIESE ENGINEERS, INC.
CONSULTING ENGINEERS CLARKSBURG, W. VA.

10443

PUBLIC ROADS DIV.	STATE DIST. NO.	STATE PROJ. NO.	FEDERAL PROJ. NO.	FISCAL YEAR	COUNTY	SHEET NO.	TOTAL SHEETS
WV	5	X316 -H- 100.40	APD 0464 (251)C		HARDY	260	670

06

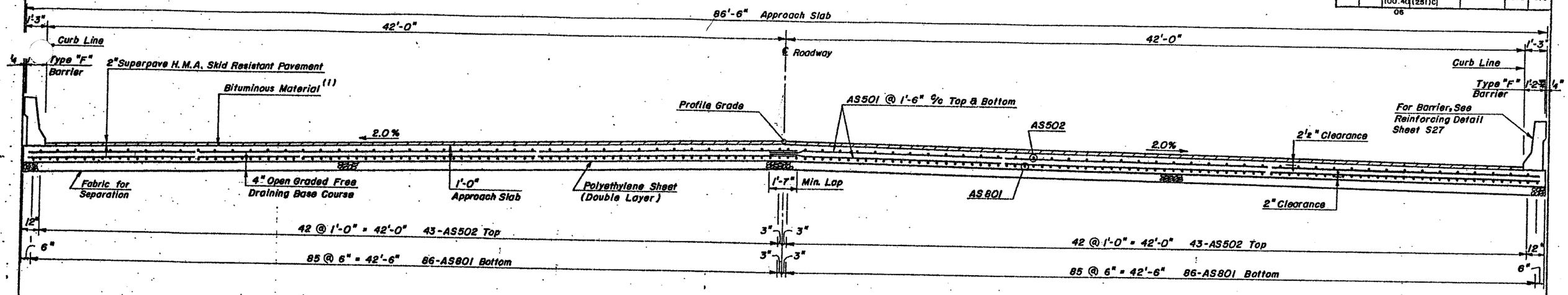

SECTION A-A

Scale = 3/8" = 1'-0"

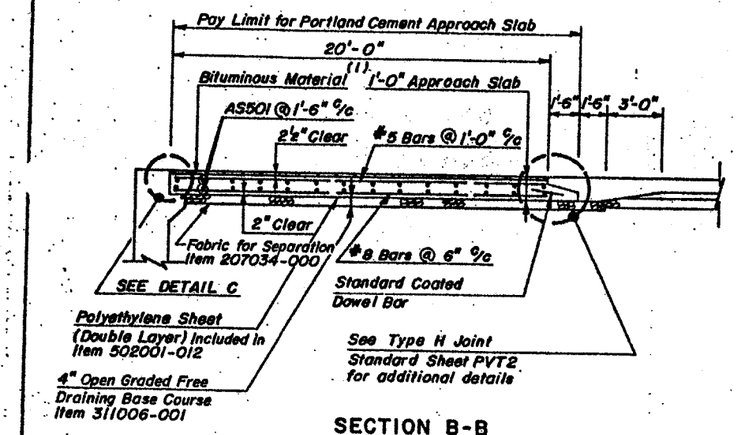

SECTION B-B

Scale = 1/4" = 1'-0"

(1) Cost of Bituminous Material to be included in unit price bid for Item 502001-012.

ESTIMATED QUANTITIES - APPROACH SLABS

Item No.	Description	At Abut. No. 1	At Abut. No. 2	TOTAL	
311006-001	Open Graded Free Draining Base Course	22.5 C.Y.	22.5 C.Y.	45 C.Y.	Roadway Item
502001-012	12 Inch Portland Cement Concrete Approach Slab	206.5 S.Y.	206.5 S.Y.	413 S.Y.	Roadway Item
402001-011	Superpave Hot-Mix Asphalt Skid Resistant Pavement	20.5 Tons	20.5 Tons	41 Tons	Roadway Item
207034-000	Fabric For Separation	200 S.Y.	200 S.Y.	400 S.Y.	Roadway Item
* 601009-003	Class H Concrete, Architectural	3.28 C.Y.	3.28 C.Y.	6.56 C.Y.	Bridge Item

* Barrier Walls on Approach Slabs.

APPROACH SLABS BAR SCHEDULE *

Size	Mark	Number Req'd. Abut. 1	Abut. 2	Total	Unit Length	Type
3	AS301	60	60	120	3'-1"	R
4	AS401	16	16	32	19'-6"	Str.
5	AS501	28	28	56	43'-10"	Str.
5	AS502	86	86	172	19'-6"	Str.
5	AS503	60	57	117	4'-8½"	U
5	AS504	60	57	117	6'-4¾"	Z
8	AS801	170	170	340	19'-6"	Str.

SUMMARY-REINFORCING STEEL BARS

(FOR INFORMATION ONLY)

Size	Approach Slab Abut. No. 1	Approach Slab Abut. No. 2	TOTAL
#3	69.5 Lbs.	69.5 Lbs.	139 Lbs.
#4	208.5 Lbs.	208.5 Lbs.	417 Lbs.
#5	3,724.0 Lbs.	3,689.0 Lbs.	7,413 Lbs.
#8	8,851.0 Lbs.	8,851.0 Lbs.	17,702 Lbs.
Total	12,853.0 Lbs.	12,818.0 Lbs.	25,671 Lbs.

* Includes reinforcing bars for Conc. Barriers on Approach Slabs. Cost of Bars are included in Item 502001-012.

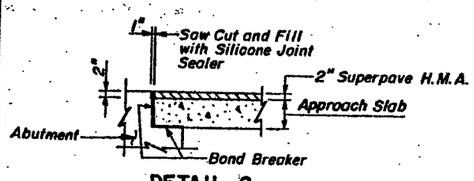

DETAIL C

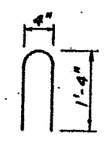

TYPE R

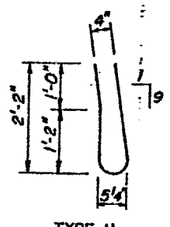

TYPE U

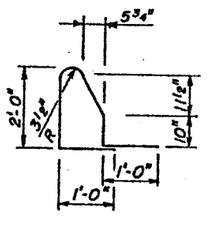

TYPE Z

REVISION NUMBER	SHEET NUMBER	REVISIONS	DATE	BY

MOOREFIELD INTERCHANGE BRIDGE

PROJECT NO. X316-H-100.40 06 HARDY COUNTY

APPROACH SLABS

DESIGNED BY	JCG	DRAWN BY	JD	INKED BY	RWK	DATE	SHEET NO.
CHECKED BY	WJR	CHECKED BY	RWK	CHECKED BY	SLN	SCALE AS NOTED	S28 of S45

JOHN C. GIESE ENGINEERS, INC.
CONSULTING ENGINEERS CLARKSBURG, W. VA.

10443

State Project No.	Federal Project No.	State Distr. No.	Fiscal Year	County	Sheet No.	Total Sheets
X315-H-100.40 06	APD 0484(251)C	5	2003	HARDY	261	670

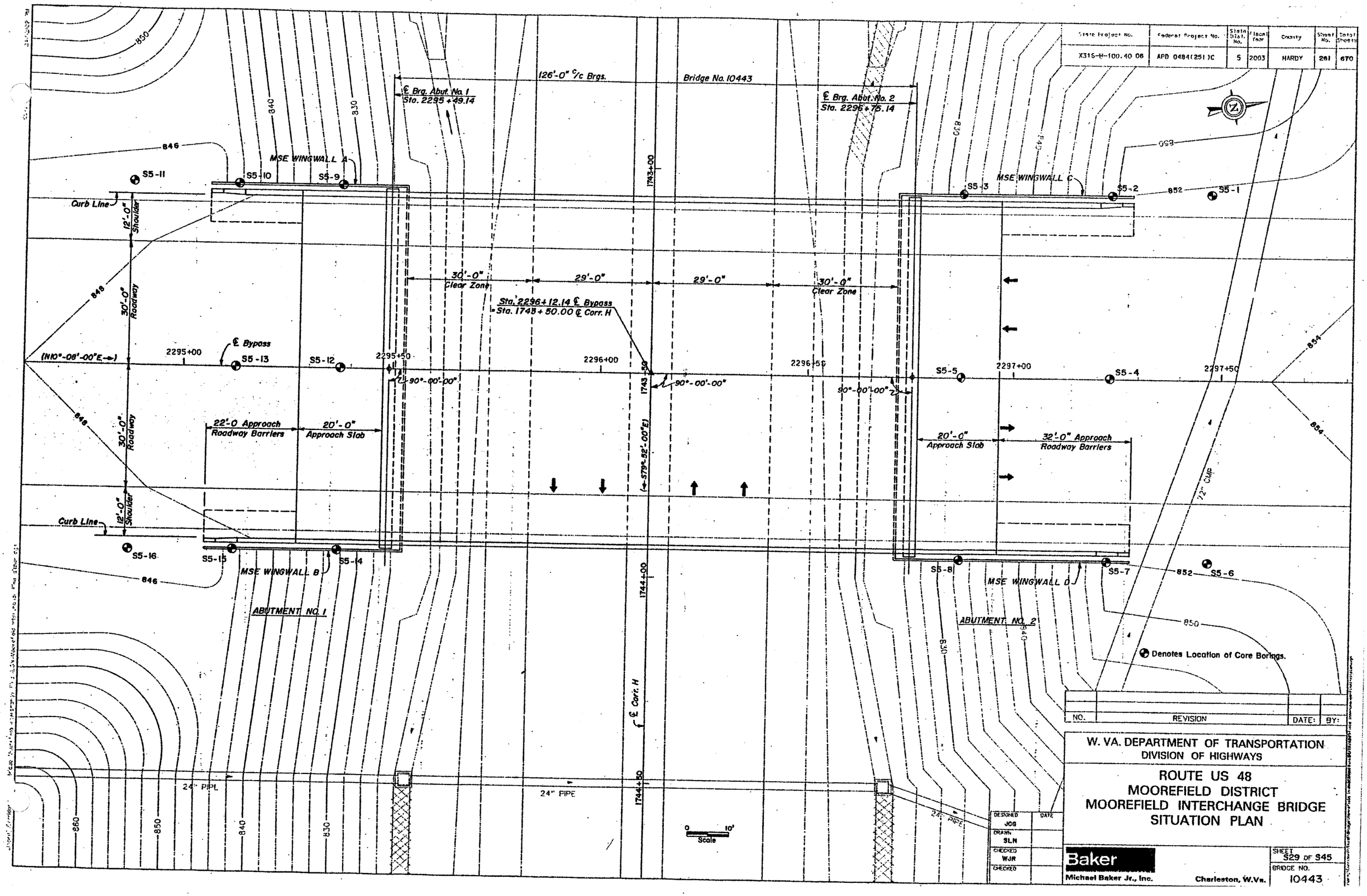

NO.	REVISION	DATE:	BY:

DESIGNED	DATE
JCG	
DRAWN	
SLN	
CHECKED	
WJR	
CHECKED	

W. VA. DEPARTMENT OF TRANSPORTATION
DIVISION OF HIGHWAYS

ROUTE US 48
MOOREFIELD DISTRICT
MOOREFIELD INTERCHANGE BRIDGE
SITUATION PLAN

Baker
Michael Baker Jr., Inc.
Charleston, W.Va.

SHEET S29 OF S45
BRIDGE NO. 10443

PUBLIC ROADS DIV.	STATE DIST. NO.	STATE PROJ. NO.	FEDERAL PROJECT NO.	FISCAL YEAR	COUNTY	SHEET NO.	TOTAL SHEETS
WV	6	X316 -H- 100.40 06	APD -0484- (251) C	2003	HARDY	262	670

Michael Baker Jr., Inc.
Corridor H, Section 6
Moorefield Interchange Bridge - Abutment Number 1

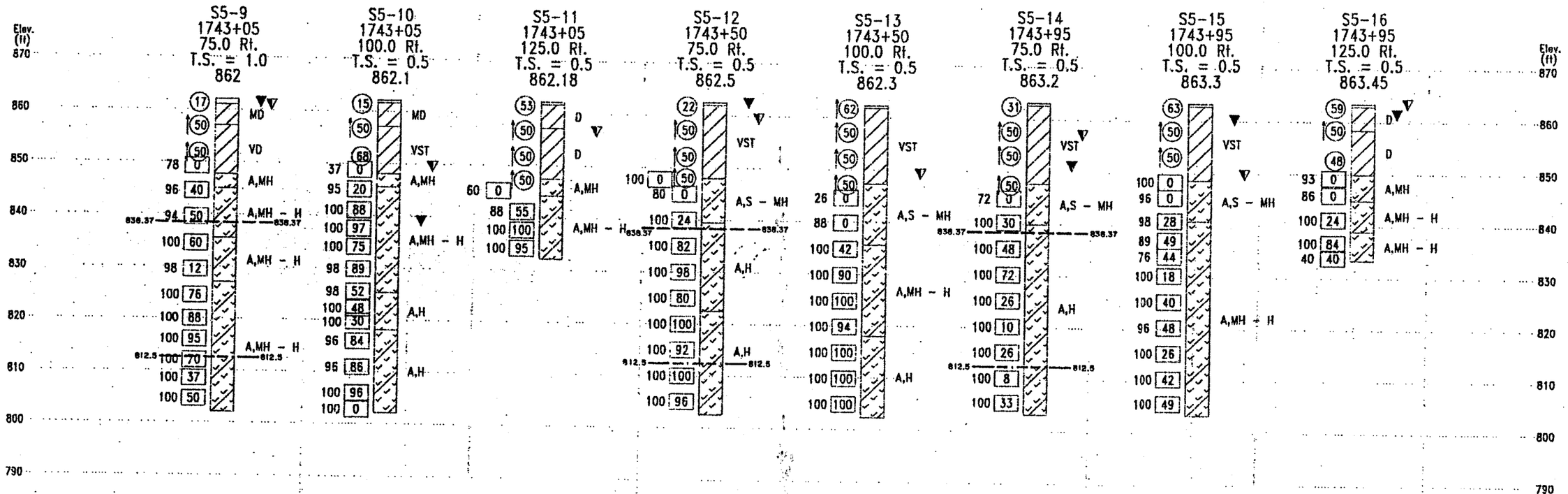

836.37 — — — — — 836.37 Bottom of Abutment

812.5 — · — · — · — 812.5 Pre-drilled and driven pile tip elevation

MINERALOGICAL DESCRIPTION OF ROCK AND SHALE

A = ARENACEOUS (SANDY)
L = CALCAREOUS (LIMEY)
C = ARGILLACEOUS (CLAYEY)

ROCK FIELD HARDNESS

ES = EXTREMELY SOFT
VS = VERY SOFT
S = SOFT
MH = MEDIUM HARD
H = HARD
VH = VERY HARD

SOIL DENSITY

GRANULAR	SPOON BLOWS
VL = VERY LOOSE	0-4
L = LOOSE	5-10
MD = MEDIUM DENSE	11-24
D = DENSE	25-50
VD = VERY DENSE	50+

CONSISTENCY

COHESIVE	SPOON BLOWS
VS = VERY SOFT	0-1
S = SOFT	2-4
MST = MEDIUM STIFF	5-8
ST = STIFF	9-15
VST = VERY STIFF	16-30
H = HARD	31-60
VH = VERY HARD	61+

LEGEND OF SYMBOLS USED ON SOIL/ROCK PROFILE

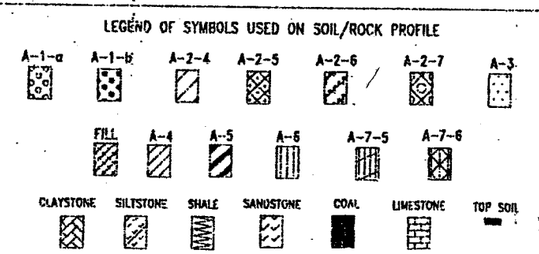

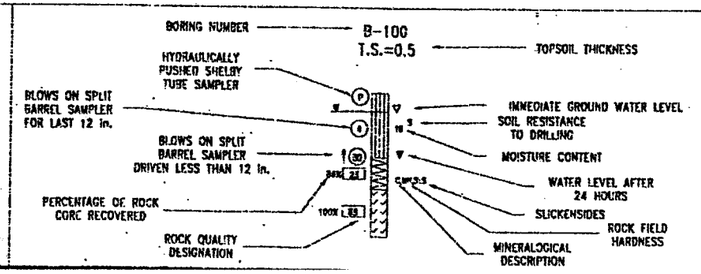

H.C. NUTTING COMPANY
APPALACHIAN REGION - 912 HOWARD STREET
CHARLESTON, WEST VIRGINIA 25301
(304) 344-9621
GEOTECHNICAL, ENVIRONMENTAL AND TESTING ENGINEERS SINCE 1921

GEOTECHNICAL DATA SUMMARY

Michael Baker Jr., Inc.
Corridor H, Section 6 Eastern Alignment
Hardy County, West Virginia

SCALE: 1" = 10'

DATE: December 2002

DWG. ID: S5BridgeCeiling

SHEET NO. 530 of 945

10443

PUBLIC ROADS DIV.	STATE DIST. NO.	STATE PROJ. NO.	FEDERAL PROJECT NO.	FISCAL YEAR	COUNTY	SHEET NO.	TOTAL SHEETS
WV	5	X316 -H- 100.40 06	APD -0484- (259) C	2003	HARDY	263	670

Michael Baker Jr., Inc.
Corridor H, Section 6
Moorefield Interchange Bridge - Abutment Number 2

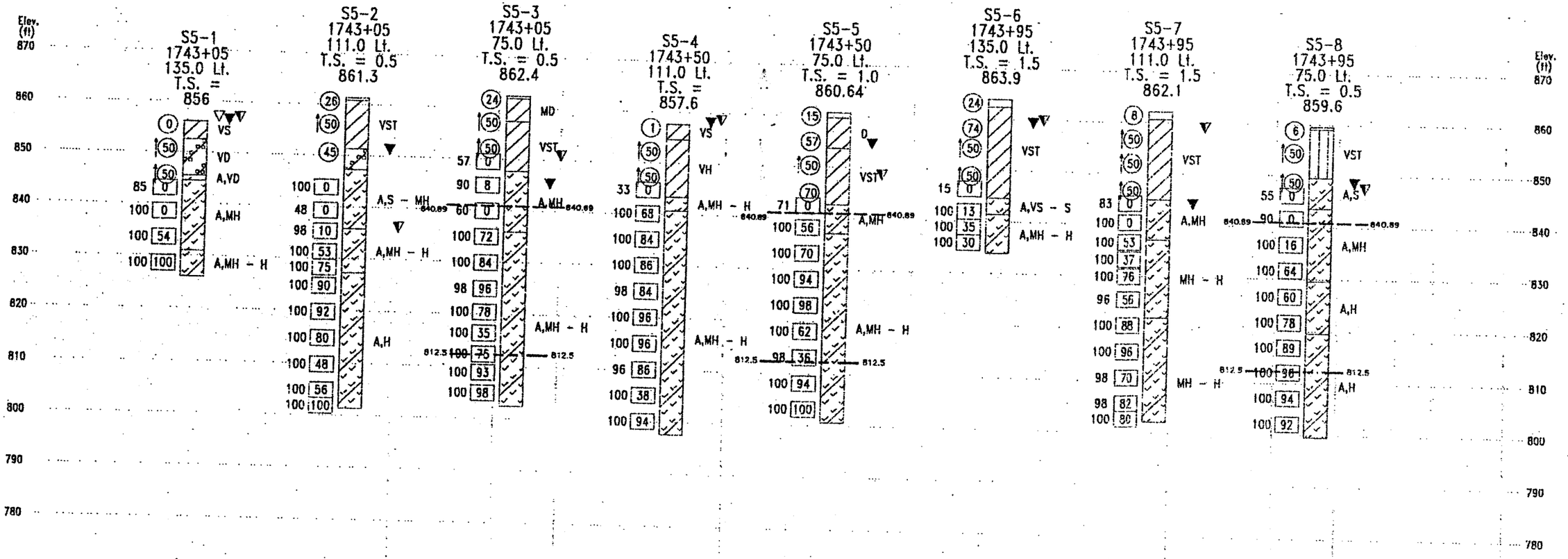

840.89 — — — — — — 840.89 Bottom of Abutment

812.5 — · — · — · — 812.5 Pre-drilled and driven pile tip elevation

MINERALOGICAL DESCRIPTION OF ROCK AND SHALE

A = ARENACEOUS (SANDY)
L = CALCAREOUS (LIMEY)
C = ARGILLACEOUS (CLAYEY)

ROCK FIELD HARDNESS

ES = EXTREMELY SOFT
VS = VERY SOFT
S = SOFT
MH = MEDIUM HARD
H = HARD
VH = VERY HARD

SOIL DENSITY

GRANULAR	SPOON BLOWS
VL = VERY LOOSE	0-4
L = LOOSE	5-10
MD = MEDIUM DENSE	11-24
D = DENSE	25-50
VD = VERY DENSE	50+

CONSISTENCY

COHESIVE	SPOON BLOWS
VS = VERY SOFT	0-1
S = SOFT	2-4
MST = MEDIUM STIFF	5-8
ST = STIFF	9-15
VST = VERY STIFF	16-30
H = HARD	31-60
VH = VERY HARD	61+

LEGEND OF SYMBOLS USED ON SOIL/ROCK PROFILE

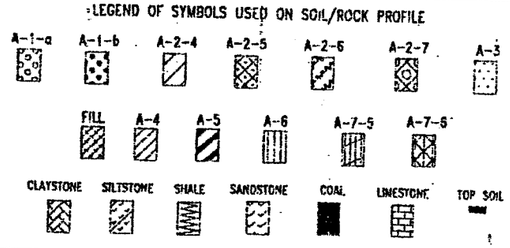

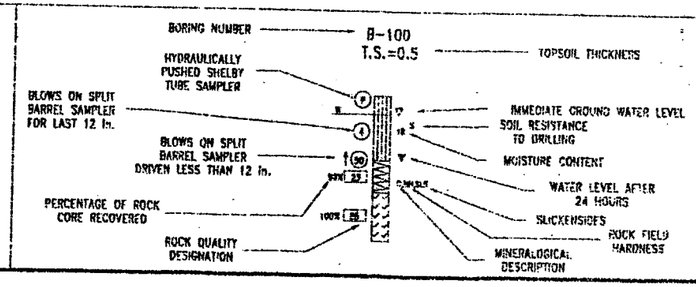

H.C. NUTTING COMPANY
APPALACHIAN REGION - 812 MOORE STREET
CHARLESTON, WEST VIRGINIA 25301
(304) 344-0821
GEOTECHNICAL, ENVIRONMENTAL AND TESTING ENGINEERS SINCE 1911

GEOTECHNICAL DATA SUMMARY

Michael Baker Jr., Inc.
Corridor H, Section 6 Eastern Alignment
Hardy County, West Virginia

SCALE: 1" = 10'

DATE: December 2002

DWG ID: S5BridgeGeiss

SHEET NO. S31 of S45

10443

PUBLIC ROADS DIV.	STATE DIST. NO.	STATE PROJ. NO.	FEDERAL PROJECT NO.	FISCAL YEAR	COUNTY	SHEET NO.	TOTAL SHEETS
WV	5	X316 -H- 100.40 06	APD -0484- (250) C	2003	HARDY	264	670

H.C. NUTTING COMPANY

APPALACHIAN REGION – 912 MORRIS STREET
CHARLESTON, WV 25301 (304) 344-0821
FAX (304) 342-4711

EMPLOYEE OWNED

GEOTECHNICAL, ENVIRONMENTAL AND TESTING ENGINEERS SINCE 1921

CORPORATE CENTER: 811 LUNKEN PARK DRIVE, CINCINNATI, OH 45230, (513) 231-8018, FAX (513) 231-8064
CENTRAL OHIO REGION: 790 MONROEVILLE ROAD, COLUMBUS, OH 43230, (614) 863-1113, FAX (614) 863-8472
INDIANA REGION: 340 MARKET STREET, STE B, LAWRENCEBURG, IN 47025, (812) 539-4380, FAX (812) 539-4381
BLUEGRASS REGION: 420-B COMMERCE CT., STE B-6, LEXINGTON, KY 40511, (859) 455-8336, FAX (859) 455-8339

Page 1 of 1

LOG OF TEST BORING

Client: Michael Baker Jr., Inc.
Project: Corridor H, Section 6 Eastern Alignment
Boring Location: Station 1743+05 Offset 135.0 Lt.
Elevation Ref.: E.L. Robinson

Boring No.: S5-1
Date Started: 10/6/2002
Date Completed: 10/7/2002
Work Order No.: 92143.016

ELEV. ft.	DEPTH ft.	DESCRIPTION OF MATERIALS (color, material description, moisture, stiffness/density/hardness (visual classification unless otherwise noted)	NO.	TYPE	DEPTH ft.	BLOWS/6" (N Value)	REC. %	RQD %	W %	LL %	PI %	HCSI	PPR tsf
856.00	0.0	Brown, SILTY CLAY (CL-ML, A-4), saturated, very soft	1	SS	0.0-1.5	1-0-0 (0)	95						
852.50	3.5	Brown to reddish brown, CLAYEY GRAVEL with SAND (GC, A-2-6), wet, very dense	2	SS	5.0-5.8	27-50/0.3	100						
845.50	10.5	Gray, SILTSTONE, laminated, residual soil, completely weathered, very dense	3	SS	10.0-11.0	20-50/0.5	70						
844.50	11.5	Gray, SILTSTONE, laminated, highly jointed and iron stained, highly weathered, medium hard	1	NX	11.0-15.0		85	0				3	
			2	NX	15.0-20.0		100	0				3	
		SDI = 97.7% UNC = 1110 PSI	3	NX	20.0-25.0		100	54				3	
831.00	25.0	Gray, SILTSTONE, laminated, slightly to faintly weathered, medium hard – hard	4	NX	25.0-30.0		100	100				3-4	
826.00	30.0	BORING COMPLETED @ 30.0'											

General Notes
Driller: ETPA
Rig No.: Ronnie
Rig Type: ATV
Method: NX/SS
Inspector: BH

Remarks
Boring surveyed into position from 2 offset stakes. As drilled boring location small pond approximately 20'x30'. Elevation estimated from plans.

Water Level Observations
Immediate: 0.0 ft. ▽
At Completion: 0.0 ft. ▽
After 24 Hrs. 0.5 ft. ▼
Water used in drilling: 7.8 ft.
BF = BACKFILLED NW = NO WATER
(Measured from ground surface)

TEST BORING CORR H EASTERN ALIGNMENT.GPJ HC NUTTING.GDT 12/2/02

H.C. NUTTING COMPANY

APPALACHIAN REGION – 912 MORRIS STREET
CHARLESTON, WV 25301 (304) 344-0821
FAX (304) 342-4711

EMPLOYEE OWNED

GEOTECHNICAL, ENVIRONMENTAL AND TESTING ENGINEERS SINCE 1921

CORPORATE CENTER: 811 LUNKEN PARK DRIVE, CINCINNATI, OH 45230, (513) 231-8018, FAX (513) 231-8064
CENTRAL OHIO REGION: 790 MONROEVILLE ROAD, COLUMBUS, OH 43230, (614) 863-1113, FAX (614) 863-8472
INDIANA REGION: 340 MARKET STREET, STE B, LAWRENCEBURG, IN 47025, (812) 539-4380, FAX (812) 539-4381
BLUEGRASS REGION: 420-B COMMERCE CT., STE B-6, LEXINGTON, KY 40511, (859) 455-8336, FAX (859) 455-8339

Page 1 of 2

LOG OF TEST BORING

Client: Michael Baker Jr., Inc.
Project: Corridor H, Section 6 Eastern Alignment
Boring Location: Station 1743+05 Offset 111.0 Lt.
Elevation Ref.: E.L. Robinson

Boring No.: S5-2
Date Started: 10/4/2002
Date Completed: 10/5/2002
Work Order No.: 92143.016

ELEV. ft.	DEPTH ft.	DESCRIPTION OF MATERIALS (color, material description, moisture, stiffness/density/hardness (visual classification unless otherwise noted)	NO.	TYPE	DEPTH ft.	BLOWS/6" (N Value)	REC. %	RQD %	W %	LL %	PI %	HCSI	PPR tsf
861.30	0.0	0.5 TOPSOIL											
860.80	0.5	Brown, GRAVELLY SILTY CLAY with SAND (CL-ML, A-4), moist, very stiff	1	SS	0.0-1.5	6-11-15 (26)	73						
		9.5 Cobbles and boulders throughout	2	SS	5.0-5.5	50/0.5	80						
851.30	10.0	Brown, CLAYEY SAND with GRAVEL (SC, A-2-6), moist – wet	3	SS	10.0-11.5	20-15-30 (45)	73						
		4.0 Cobbles and boulders throughout											
847.30	14.0	Gray, SILTSTONE, laminated, bedded at 40° from horizontal, jointed and iron stained at 1" to 3" spacing, highly to moderately weathered, soft – medium hard	1	NX	15.0-20.0		100	0				2-3	
		11.5	2	NX	20.0-24.0		48	0				2-3	
835.80	25.5	Dark gray, SILTSTONE, laminated, bedded at 40° from horizontal, moderately jointed (iron stained), slightly weathered, medium hard – hard	3	NX	24.0-28.0		98	10				3	
		8.5 High angle iron stained joint at 30.1° to 30.6°	4	NX	28.0-32.0		100	53				3-4	
827.30	34.0		5	NX	32.0-34.0		100	75				3-4	

General Notes
Driller: ETPA
Rig No.: Dave
Rig Type: Truck
Method: NX/SS
Inspector: JRB

Remarks

Water Level Observations
Immediate: NW ft.
At Completion: 26.0 ft. ▽
After 24 Hrs. 11.0 ft. ▼
Water used in drilling: 5.5 ft.
BF = BACKFILLED NW = NO WATER
(Measured from ground surface)

TEST BORING CORR H EASTERN ALIGNMENT.GPJ HC NUTTING.GDT 12/2/02

MOOREFIELD I/C BRIDGE
PROJ. NO. X316-H-100.40 06 HARDY COUNTY

BORING LOGS

SHEET NO. S32 of S45

10443

PUBLIC ROADS DIV.	STATE DIST. NO	STATE PROJ. NO.	FEDERAL PROJECT NO.	FISCAL YEAR	COUNTY	SHEET NO.	TOTAL SHEETS
WV	3	X316 -H- 100.40 06	APD -0484- (251) C	2003	HARDY	265	670

H.C. NUTTING COMPANY

APPALACHIAN REGION – 912 MORRIS STREET
CHARLESTON, WV 25301 (304) 344-0821
FAX (304) 342-4711

EMPLOYEE OWNED

GEOTECHNICAL, ENVIRONMENTAL AND TESTING ENGINEERS SINCE 1921

CORPORATE CENTER: 811 LINDER PARK DRIVE, CINCINNATI, OH 45230, (513) 321-5816, FAX (513) 321-0381
CENTRAL OHIO REGION: 798 JOHNSTON ROAD, COLUMBUS, OH 43230, (614) 865-9115, FAX (614) 868-0476
INDIANA REGION: 345 WALNUT STREET, STE B, LAWRENCEBURG, IN 47025, (812) 537-1398, FAX (812) 537-1381
KENTUCKY REGION: 476-B CONRAD CT., STE B-6, LEXINGTON, KY 40511, (859) 455-8630, FAX (859) 455-8632

Page 2 of 2

LOG OF TEST BORING

Client: Michael Baker Jr., Inc.
Project: Corridor H, Section 6 Eastern Alignment
Boring Location: Station 1743+05 Offset 111.0 Lt.
Elevation Ref.: E.L. Robinson

Boring No.: S5-2
Date Started: 10/4/2002
Date Completed: 10/5/2002
Work Order No.: 92143.016

ELEV. ft.	DEPTH ft.	DESCRIPTION OF MATERIALS (color, material description, moisture, stiffness/density/hardness (visual classification unless otherwise noted))	SAMPLE NO.	TYPE	DEPTH ft.	BLOWS/6" (N Value)	REC. %	RQD %	W %	LL %	PI %	HCSI	PPR tsf
		Dark gray, SILTSTONE, laminated, bedded at 40° from horizontal, pyrite along joints, faintly weathered, hard (LAYER CONTINUED DESCRIPTION REPEATED)	6	NX	34.0-39.0		100	90				4	
			7	NX	39.0-44.0		100	92				4	
	26.0		8	NX	44.0-49.0		100	80				4	
			9	NX	49.0-54.0		100	48				4	
		Broken zone at 51.2' to 56.5'	10	NX	54.0-59.0		100	56				4	
801.30	60.0	BORING COMPLETED @ 60.0'	11	NX	59.0-60.0		100	100				4	

General Notes
Driller: ETPA
Rig No.: Dove
Rig Type: Truck
Method: NX/SS
Inspector: JRB

Remarks

Water Level Observations
Immediate: NW ft.
At Completion: 26.0 ft. ▽
After: 24 Hrs. 11.0 ft. ▼
Water used in drilling: 5.5 ft.
BF = BACKFILLED NW = NO WATER
(Measured from ground surface)

TEST BORING CORR H EASTERN ALIGNMENT.GPJ HC NUTTING.GDT 12/2/02

H.C. NUTTING COMPANY

APPALACHIAN REGION – 912 MORRIS STREET
CHARLESTON, WV 25301 (304) 344-0821
FAX (304) 342-4711

EMPLOYEE OWNED

GEOTECHNICAL, ENVIRONMENTAL AND TESTING ENGINEERS SINCE 1921

CORPORATE CENTER: 811 LINDER PARK DRIVE, CINCINNATI, OH 45230, (513) 321-5816, FAX (513) 321-0381
CENTRAL OHIO REGION: 798 JOHNSTON ROAD, COLUMBUS, OH 43230, (614) 865-9115, FAX (614) 868-0476
INDIANA REGION: 345 WALNUT STREET, STE B, LAWRENCEBURG, IN 47025, (812) 537-1398, FAX (812) 537-1381
KENTUCKY REGION: 476-B CONRAD CT., STE B-6, LEXINGTON, KY 40511, (859) 455-8630, FAX (859) 455-8632

Page 1 of 2

LOG OF TEST BORING

Client: Michael Baker Jr., Inc.
Project: Corridor H, Section 6 Eastern Alignment
Boring Location: Station 1743+05 Offset 75.0 Lt.
Elevation Ref.: E.L. Robinson

Boring No.: S5-3
Date Started: 10/3/2002
Date Completed: 10/4/2002
Work Order No.: 92143.016

ELEV. ft.	DEPTH ft.	DESCRIPTION OF MATERIALS (color, material description, moisture, stiffness/density/hardness (visual classification unless otherwise noted))	SAMPLE NO.	TYPE	DEPTH ft.	BLOWS/6" (N Value)	REC. %	RQD %	W %	LL %	PI %	HCSI	PPR tsf
862.40	0.0												
861.90	0.5	0.5 TOPSOIL with organics											
		Brown, SILTY SAND with GRAVEL (SM-A-4), moist, medium dense	1	SS	0.0-1.5	5-8-16 (24)							
	4.5												
857.40	5.0												
		Brown, GRAVELLY SILTY CLAY with SAND (CL-ML, A-4), moist, very stiff	2	SS	5.0-5.5	50/0.5	100						
	9.7	Boulders throughout	3	SS	10.0-10.8	28-50/0.3	67						
847.70	14.7		1	NX	10.8-15.0		57	0				3	
		Gray, SILTSTONE, laminated, highly jointed and iron stained throughout, highly to moderately weathered, medium hard	2	NX	15.0-20.0		90	8				3-4	
840.89	11.8												
		BOTTOM OF ABUTMENT NO. 2	3	NX	20.0-25.0		50	0				3	
835.90	26.5												
		Gray, SILTSTONE, laminated, slightly jointed (joint spacing 0.5' to 1.5') (quartz and pyrite present in joints) slightly weathered, medium hard – hard	4	NX	25.0-30.0		100	72				3-4	
			5	NX	30.0-35.0		100	84				3-4	

General Notes
Driller: ETPA
Rig No.: Dove
Rig Type: Truck
Method: NX/SS
Inspector: BH

Remarks
42-52 split core barrel used.

Water Level Observations
Immediate: NW ft.
At Completion: 12.5 ft. ▽
After: 24 Hrs. 18.0 ft. ▼
Water used in drilling: 2.0 ft.
BF = BACKFILLED NW = NO WATER
(Measured from ground surface)

TEST BORING CORR H EASTERN ALIGNMENT.GPJ HC NUTTING.GDT 12/2/02

MOOREFIELD I/C BRIDGE
PROJ. NO. X316-H-100.40 06 HARDY COUNTY

BORING LOGS

SHEET NO. S33 of S45

10443

PUBLIC ROADS DIV	STATE DIST. NO.	STATE PROJ. NO.	FEDERAL PROJECT NO.	FISCAL YEAR	COUNTY	SHEET NO.	TOTAL SHEETS
WV	5	X316 -H- 100.40 06	APD -0464- (251) C	2003	HARDY	266	670

H.C. NUTTING COMPANY

APPALACHIAN REGION – 912 MORRIS STREET
CHARLESTON, WV 25301 (304) 344-0821
FAX (304) 342-4711

EMPLOYEE OWNED

GEOTECHNICAL, ENVIRONMENTAL AND TESTING ENGINEERS SINCE 1921

CORPORATE CENTER: 811 LUNGER PARK DRIVE, CINCINNATI, OH 45215, (513) 271-6454, FAX (513) 271-9094
CENTRAL OHIO REGION: 799 MORRISON ROAD, COLUMBUS, OH 43230, (614) 863-5113, FAX (614) 863-0478
INDIANA REGION: 345 WALNUT STREET, STE 8, LAWRENCEBURG, IN 47025, (812) 539-4500, FAX (812) 539-4504
BLUEGRASS REGION: 479-B CONWAY CT., STE 8-B, LEXINGTON, KY 40511, (606) 255-8020, FAX (606) 255-8030

Page 2 of 2

LOG OF TEST BORING

Client: Michael Baker Jr., Inc.
Project: Corridor H, Section 6 Eastern Alignment
Boring Location: Station 1743+05 Offset 75.0 Lt.
Elevation Ref.: E.L. Robinson

Boring No.: S5-3
Date Started: 10/3/2002
Date Completed: 10/4/2002
Work Order No.: 92143.016

ELEV. ft.	DEPTH ft.	DESCRIPTION OF MATERIALS (color, material description, moisture, stiffness/density/hardness (visual classification unless otherwise noted))	SAMPLE NO.	TYPE	DEPTH ft.	BLOWS/6" (N Value)	REC. %	RQD %	W %	LL %	PI %	HCSI	PPR tsf
		Gray, SILTSTONE, laminated, slightly jointed (joint spacing 0.5' to 1.5') (quartz and pyrite present in joints) slightly weathered, medium hard – hard (LAYER CONTINUED DESCRIPTION REPEATED)	6	NX	35.0-40.0		98	96				3-4	
		33.5	7	NX	40.0-44.0		100	78				3-4	
			8	NX	44.0-48.0		100	35				3-4	
812.5		PRE-DRILLED AND DRIVEN PILE TIP ELEVATION	9	NX	48.0-52.0		100	75				3-4	
			10	NX	52.0-55.0		100	93				4	
			11	NX	55.0-60.0		100	98				4	
802.40	60.0	BORING COMPLETED @ 60.0'											

General Notes
Driller: ETPA
Rig No.: Dave
Rig Type: Truck
Method: NX/SS
Inspector: BH

Remarks
42-52 split core barrel used.

Water Level Observations
Immediate: NW ft.
At Completion: 12.5 ft.
After 24 Hrs. 18.0 ft.
Water used in drilling: 2.0 ft.
BF = BACKFILLED NW = NO WATER
(Measured from ground surface)

TEST BORING CORR H EASTERN ALIGNMENT.GPJ HC NUTTING.GDT 12/2/02

H.C. NUTTING COMPANY

APPALACHIAN REGION – 912 MORRIS STREET
CHARLESTON, WV 25301 (304) 344-0821
FAX (304) 342-4711

EMPLOYEE OWNED

GEOTECHNICAL, ENVIRONMENTAL AND TESTING ENGINEERS SINCE 1921

CORPORATE CENTER: 811 LUNGER PARK DRIVE, CINCINNATI, OH 45215, (513) 271-6454, FAX (513) 271-9094
CENTRAL OHIO REGION: 799 MORRISON ROAD, COLUMBUS, OH 43230, (614) 863-5113, FAX (614) 863-0478
INDIANA REGION: 345 WALNUT STREET, STE 8, LAWRENCEBURG, IN 47025, (812) 539-4500, FAX (812) 539-4504
BLUEGRASS REGION: 479-B CONWAY CT., STE 8-B, LEXINGTON, KY 40511, (606) 255-8020, FAX (606) 255-8030

Page 1 of 2

LOG OF TEST BORING

Client: Michael Baker Jr., Inc.
Project: Corridor H, Section 6 Eastern Alignment
Boring Location: Station 1743+50 Offset 111.0 Lt.
Elevation Ref.: E.L. Robinson

Boring No.: S5-4
Date Started: 10/5/2002
Date Completed: 10/6/2002
Work Order No.: 92143.016

ELEV. ft.	DEPTH ft.	DESCRIPTION OF MATERIALS (color, material description, moisture, stiffness/density/hardness (visual classification unless otherwise noted))	SAMPLE NO.	TYPE	DEPTH ft.	BLOWS/6" (N Value)	REC. %	RQD %	W %	LL %	PI %	HCSI	PPR tsf
857.50	0.0		1	SS	0.0-1.5	1-0-1 (1)	53						
	3.0	Brown, SILTY CLAY with SAND (CL-ML, A-4) trace organics (grass), wet, very soft											
854.60	3.0	Brown, GRAVELLY SILTY CLAY with SAND (CL-ML, A-4), moist, very hard	2	SS	5.0-5.9	21-50/0.4	100						
	11.2	Boulders throughout	3	SS	10.0-10.8	32-50/0.3	75						
843.40	14.2		1	NX	10.8-15.0		33	0				3	
	2.7	Gray, SILTSTONE, laminated, highly jointed with iron staining, slightly weathered, medium hard – hard											
840.70	16.9	Gray, SILTSTONE, laminated, slightly jointed, slightly weathered, medium hard – hard	2	NX	15.0-20.0		100	68				3-4	
			3	NX	20.0-25.0		100	84				3-4	
		SDI = 97.3%	4	NX	25.0-30.0		100	86				3-4	
		0.7' joint approximately 40° at 30.0'	5	NX	30.0-35.0		98	84				3-4	

General Notes
Driller: ETPA
Rig No.: Ronnie
Rig Type: ATV
Method: NX/SS
Inspector: BH

Remarks
Boring location offset 11.0' Lt. of Ct. Original location 1743+50 100' Lt. Located in wetland adjacent small pond marsh vegetation present some standing (drift) water at surface.

Water Level Observations
Immediate: NW ft.
At Completion: 0.0 ft.
After 24 Hrs. 0.5 ft.
Water used in drilling: 6.6 ft.
BF = BACKFILLED NW = NO WATER
(Measured from ground surface)

TEST BORING CORR H EASTERN ALIGNMENT.GPJ HC NUTTING.GDT 12/2/02

MOOREFIELD I/C BRIDGE
PROJ. NO. X316-H-100.40 06 HARDY COUNTY

BORING LOGS

SHEET NO. S34 of S45

10443

PUBLIC ROADS DIV.	STATE DIST. NO.	STATE PROJ. NO.	FEDERAL PROJECT NO.	FISCAL YEAR	COUNTY	SHEET NO.	TOTAL SHEETS
WV	6	X316 -H- 100.40 06	APD -0484- (251) C	2003	HARDY	267	670

H.C. NUTTING COMPANY

APPALACHIAN REGION – 912 MORRIS STREET
CHARLESTON, WV 25301 (304) 344-0821
FAX (304) 342-4711

EMPLOYEE OWNED

GEOTECHNICAL, ENVIRONMENTAL AND TESTING ENGINEERS SINCE 1921

CORPORATE CENTER
811 LINDEN PARK DRIVE
CINCINNATI, OH 45229
(513) 321-5810
FAX (513) 321-6264

CENTRAL OHIO REGION
792 MORRISON ROAD
COLUMBUS, OH 43230
(614) 863-3113
FAX (614) 863-3475

INDIANA REGION
345 WALNUT STREET, STE 5
LAWRENCEBURG, IN 47025
(812) 537-4300
FAX (812) 537-4301

BLUEGRASS REGION
470-B CORNET CT., STE B-6
LEXINGTON, KY 40511
(859) 455-8153
FAX (859) 455-8583

Page 2 of 2

LOG OF TEST BORING

Client: Michael Baker Jr., Inc.
Project: Corridor H, Section 6 Eastern Alignment
Boring Location: Station 1743+50 Offset 111.0 Lt.
Elevation Ref.: E.L. Robinson

Boring No.: S5-4
Date Started: 10/5/2002
Date Completed: 10/6/2002
Work Order No.: 92143.015

ELEV. ft.	DEPTH ft.	DESCRIPTION OF MATERIALS (color, material description, moisture, stiffness/density/hardness (visual classification unless otherwise noted))	SAMPLE NO.	TYPE	DEPTH ft.	BLOWS/6" (N Value)	REC. %	RQD %	W %	LL %	PI %	HCSI	PPR tsf
		Gray, SILTSTONE, laminated, slightly jointed, slightly weathered, medium hard – hard (LAYER CONTINUED DESCRIPTION REPEATED)											
	43.1		6	NX	35.0–40.0		100	96				3–4	
			7	NX	40.0–45.0		100	96				3–4	
			8	NX	45.0–50.0		96	88				3–4	
			9	NX	50.0–55.0		100	38				3–4	
			10	NX	55.0–60.0		100	94				3–4	
797.60	60.0	BORING COMPLETED @ 60.0'											

General Notes

Driller	ETPA
Rig No.	Ronnie
Rig Type	ATV
Method	NX/SS
Inspector	BH

Remarks

Boring location offset 11.0' Lt. of CL. Original location 1743+50 100' Lt. Located in wetland adjacent small pond marsh vegetation present some standing (drill) water of surface.

Water Level Observations

Immediate	NW	ft.
At Completion	0.0	ft. ▽
After 24 Hrs.	0.5	ft. ▼
Water used in drilling	6.6	ft.

BF = BACKFILLED NW = NO WATER
(Measured from ground surface)

TEST BORING CORR H EASTERN ALIGNMENT.GPJ HC NUTTING.GDT 12/2/02

H.C. NUTTING COMPANY

APPALACHIAN REGION – 912 MORRIS STREET
CHARLESTON, WV 25301 (304) 344-0821
FAX (304) 342-4711

EMPLOYEE OWNED

GEOTECHNICAL, ENVIRONMENTAL AND TESTING ENGINEERS SINCE 1921

CORPORATE CENTER
811 LINDEN PARK DRIVE
CINCINNATI, OH 45229
(513) 321-5810
FAX (513) 321-6264

CENTRAL OHIO REGION
792 MORRISON ROAD
COLUMBUS, OH 43230
(614) 863-3113
FAX (614) 863-3475

INDIANA REGION
345 WALNUT STREET, STE 5
LAWRENCEBURG, IN 47025
(812) 537-4300
FAX (812) 537-4301

BLUEGRASS REGION
470-B CORNET CT., STE B-6
LEXINGTON, KY 40511
(859) 455-8153
FAX (859) 455-8583

Page 1 of 2

LOG OF TEST BORING

Client: Michael Baker Jr., Inc.
Project: Corridor H, Section 6 Eastern Alignment
Boring Location: Station 1743+50 Offset 75.0 Lt.
Elevation Ref.: E.L. Robinson

Boring No.: S5-5
Date Started: 10/3/2002
Date Completed: 10/3/2002
Work Order No.: 92143.016

ELEV. ft.	DEPTH ft.	DESCRIPTION OF MATERIALS (color, material description, moisture, stiffness/density/hardness (visual classification unless otherwise noted))	SAMPLE NO.	TYPE	DEPTH ft.	BLOWS/6" (N Value)	REC. %	RQD %	W %	LL %	PI %	HCSI	PPR tsf
860.64	0.0												
859.64	1.0	TOPSOIL with organics											
		Brown, SILTY SAND with GRAVEL (rounded) (SM, A-4), moist, dense	1	SS	0.0–1.5	3–5–10 (15)	80						
	6.0	Boulders throughout											
853.64 ▽	7.0		2	SS	5.0–6.5	25–32–25 (57)	47						
		Brown, GRAVELLY SILTY CLAY with SAND (CL-ML, A-4), moist, very stiff											
			3	SS	10.0–10.8	25–50/0.3	62						
	11.0	Boulders throughout											
			4	SS	15.0–16.5	25–30–40 (70)	93						
842.64	18.0												
		Gray, SILTSTONE, laminated, highly jointed, iron stained, highly to medium weathered, medium hard	1	NX	16.5–20.0		71	0				3	
840.89	5.6	BOTTOM OF ABUTMENT NO. 2											
837.04	23.6		2	NX	20.0–25.0		100	56				3	
		Gray, SILTSTONE, laminated, slightly jointed, slightly weathered, medium hard – hard	3	NX	25.0–30.0		100	70				3–4	
			4	NX	30.0–35.0		100	94				4	

General Notes

Driller	ETPA
Rig No.	Ronnie
Rig Type	ATV
Method	NX/SS
Inspector	Bit

Remarks

Water Level Observations

Immediate	NW	ft.
At Completion	13.0	ft. ▽
After 24 Hrs.	7.0	ft. ▼
Water used in drilling	10.8	ft.

BF = BACKFILLED NW = NO WATER
(Measured from ground surface)

TEST BORING CORR H EASTERN ALIGNMENT.GPJ HC NUTTING.GDT 12/2/02

MOOREFIELD I/C BRIDGE
PROJ. NO. X316-H-100.40 06 HARDY COUNTY

BORING LOGS

SHEET NO. S35 of S45

10443

PUBLIC ROADS DIV.	STATE DIST. NO.	STATE PROJ. NO.	FEDERAL PROJECT NO.	FISCAL YEAR	COUNTY	SHEET NO.	TOTAL SHEETS
WV	5	X316 -H- 100.40 08	APD -0484- (251) C	2003	HARDY	268	670

H.C. NUTTING COMPANY

APPALACHIAN REGION – 912 MORRIS STREET
CHARLESTON, WV 25301 (304) 344-0821
FAX (304) 342-4711

EMPLOYEE OWNED

GEOTECHNICAL, ENVIRONMENTAL AND TESTING ENGINEERS SINCE 1921

CORPORATE CENTER: 911 LINDEN PARK DRIVE, CINCINNATI, OH 45208 (513) 351-0910 FAX (513) 321-0284
CENTRAL OHIO REGION: 798 MORRISON ROAD, COLUMBUS, OH 43230 (614) 863-0113 FAX (614) 863-0475
INDIANA REGION: 342 WALNUT STREET, STE B, LAWRENCEBURG, IN 47025 (812) 576-4369 FAX (812) 537-4201
KENTUCKY REGION: 470-2 CONVAT CT., STE B-6, LEXINGTON, KY 40511 (859) 455-5332 FAX (859) 455-0839

Page 2 of 2

LOG OF TEST BORING

Client: Michael Baker Jr., Inc.
Project: Corridor H, Section 6 Eastern Alignment
Boring Location: Station 1743+50 Offset 75.0 Lt.
Elevation Ref.: E.L. Robinson

Boring No.: S5-5
Date Started: 10/3/2002
Date Completed: 10/5/2002
Work Order No.: 92143.016

ELEV. ft.	DEPTH ft.	DESCRIPTION OF MATERIALS (color, material description, moisture, stiffness/density/hardness (visual classification unless otherwise noted))	SAMPLE NO.	TYPE	DEPTH ft.	BLOWS/6" (N Value)	REC. %	RQD %	W %	LL %	PI %	HCSI	PPR tsf
		Gray, SILTSTONE, laminated, slightly jointed, slightly weathered, medium hard – hard (LAYER CONTINUED DESCRIPTION REPEATED)	5	NX	35.0–40.0		100	98				4	
		36.4 Lost water at 41.5'	6	NX	40.0–45.0		100	62				3–4	
812.5		Laminar quartz veins at 47.0' to 50.0', pyrite along some joints	7	NX	45.0–50.0		98	36				3–4	
		PRE-DRILLED AND DRIVEN PILE TIP ELEVATION	8	NX	50.0–55.0		100	94				3–4	
			9	NX	55.0–60.0		100	100				4	
800.64	60.0	BORING COMPLETED @ 60.0'											

General Notes
Driller: ETPA
Rig No.: Ronnie
Rig Type: ATV
Method: NX/SS
Inspector: BH

Remarks

Water Level Observations
Immediate: NW ft.
At Completion: 13.0 ft. ▼
After 24 Hrs. 7.0 ft. ▼
Water used in drilling: 10.8 ft.
BF = BACKFILLED NW = NO WATER
(Measured from ground surface)

TEST BORING CORR. H EASTERN ALIGNMENT.GPJ HC NUTTING.GDT 12/2/02

H.C. NUTTING COMPANY

APPALACHIAN REGION – 912 MORRIS STREET
CHARLESTON, WV 25301 (304) 344-0821
FAX (304) 342-4711

EMPLOYEE OWNED

GEOTECHNICAL, ENVIRONMENTAL AND TESTING ENGINEERS SINCE 1921

CORPORATE CENTER: 911 LINDEN PARK DRIVE, CINCINNATI, OH 45208 (513) 351-0910 FAX (513) 321-0284
CENTRAL OHIO REGION: 798 MORRISON ROAD, COLUMBUS, OH 43230 (614) 863-0113 FAX (614) 863-0475
INDIANA REGION: 342 WALNUT STREET, STE B, LAWRENCEBURG, IN 47025 (812) 576-4369 FAX (812) 537-4201
KENTUCKY REGION: 470-2 CONVAT CT., STE B-6, LEXINGTON, KY 40511 (859) 455-5332 FAX (859) 455-0839

Page 1 of 1

LOG OF TEST BORING

Client: Michael Baker Jr., Inc.
Project: Corridor H, Section 6 Eastern Alignment
Boring Location: Station 1743+95 Offset 135.0 Lt.
Elevation Ref.: E.L. Robinson

Boring No.: S5-6
Date Started: 10/5/2002
Date Completed: 10/5/2002
Work Order No.: 92143.016

ELEV. ft.	DEPTH ft.	DESCRIPTION OF MATERIALS (color, material description, moisture, stiffness/density/hardness (visual classification unless otherwise noted))	SAMPLE NO.	TYPE	DEPTH ft.	BLOWS/6" (N Value)	REC. %	RQD %	W %	LL %	PI %	HCSI	PPR tsf
863.90	0.0												
	1.5	TOPSOIL	1	SS	0.0–1.5	5–9–15 (24)	100						
862.40		Brown, GRAVELLY SILTY CLAY with SAND (CL-ML, A-4), moist, very stiff											
			2	SS	5.0–6.5	26–31–43 (74)	20						
		17.8 Cobbles and boulders throughout	3	SS	9.5–9.9	50/0.4	100						
			4	SS	15.0–15.2	50/0.2	50						
844.60	19.3		1	NX	15.2–20.0		15	0				1	
		Gray, SILTSTONE, laminated, jointed and iron stained, completely weathered upper 1.0', highly to moderately weathered, very soft – soft											
841.40	22.5	3.2	2	NX	20.0–24.0		100	13				2–3	
		Dark gray, SILTSTONE, laminated, bedded at 40° from horizontal, moderately jointed, slightly weathered, medium hard – hard											
		7.5	3	NX	24.0–26.0		100	35				3–4	
833.90	30.0	Jointed at 2" spacing from 26.2' to 30.0'	4	NX	26.0–30.0		100	30				3–4	
		BORING COMPLETED @ 30.0											

General Notes
Driller: ETPA
Rig No.: Dave
Rig Type: Truck
Method: NX/SS
Inspector: JRB

Remarks

Water Level Observations
Immediate: NW ft.
At Completion: 5.0 ft. ▼
After 24 Hrs. 5.5 ft. ▼
Water used in drilling: 3.5 ft.
BF = BACKFILLED NW = NO WATER
(Measured from ground surface)

TEST BORING CORR. H EASTERN ALIGNMENT.GPJ HC NUTTING.GDT 12/2/02

MOOREFIELD I/C BRIDGE
PROJ. NO. X316-H-100.40 06 HARDY COUNTY

BORING LOGS

SHEET NO. S36 of S45

10443

PUBLIC ROADS DIV.	STATE DIST. NO.	STATE ROUT. NO.	FEDERAL PROJECT NO.	FISCAL YEAR	COUNTY	SHEET NO.	TOTAL SHEETS
WV	5	X316 -H- 100.40 06	APD -0484- (251) C	2003	HARDY	269	670

H.C. NUTTING COMPANY
APPALACHIAN REGION – 912 MORRIS STREET
CHARLESTON, WV 25301 (304) 344-0821
FAX (304) 342-4711
EMPLOYEE OWNED
GEOTECHNICAL, ENVIRONMENTAL AND TESTING ENGINEERS SINCE 1921

LOG OF TEST BORING

Client: Michael Baker Jr., Inc.
Project: Corridor H, Section 6 Eastern Alignment
Boring Location: Station 1743+95 : Offset 111.0 Lt.
Elevation Ref.: E.L. Robinson

Boring No.: S5-7
Date Started: 10/5/2002
Date Completed: 10/6/2002
Work Order No.: 92143.016

ELEV. ft.	DEPTH ft.	DESCRIPTION OF MATERIALS (color, material description, moisture, stiffness/density/hardness (visual classification unless otherwise noted)	NO.	TYPE	DEPTH ft.	BLOWS/6" (N Value)	REC. %	RQD %	W %	LL %	PI %	HCSI	PPR tsf
862.10	0.0												
	1.5	TOPSOIL											
860.80		Brown, GRAVELLY SILTY CLAY with SAND (CL-ML, A-4), moist, very stiff	1	SS	0.0–1.5	2-4-4 (8)	20						
			2	SS	5.0–5.9	30-50/0.4	100						
	15.7		3	SS	10.0–10.5	50/0.5	100						
			4	SS	15.0–15.0	38-50/0.5	80						
844.30	17.2	Gray, SILTSTONE, highly jointed, iron stained, highly weathered, medium hard	1	NX	16.0–20.0		85	0				3	
	7.8	Completely weathered from 22.8' to 23.2'	2	NX	20.0–23.5		100	0				3	
837.10	25.0	Gray, SILTSTONE, moderately to slightly jointed (0.5' to 1.5' joint spacing) some iron staining, slightly weathered, medium hard – hard	3	NX	23.5–27.5		100	53				3	
			4	NX	27.5–30.2		100	37				3	
	15.0		5	NX	30.2–34.0		100	76				3-4	

General Notes
Driller: ETPA
Rig No.: Dave
Rig Type: Truck
Method: NX/SS
Inspector: JRB/BH

Remarks
Moved 11' left offset and 2.8' higher

Water Level Observations
Immediate: NW ft.
At Completion: 4.0 ft.
After 24 Hrs. 19.0 ft.
Water used in drilling: 5.9 ft.
BF = BACKFILLED NW = NO WATER
(Measured from ground surface)

TEST BORING CORR H EASTERN ALIGNMENT.GPJ HC NUTTING.GDT 12/2/02

H.C. NUTTING COMPANY
APPALACHIAN REGION – 912 MORRIS STREET
CHARLESTON, WV 25301 (304) 344-0821
FAX (304) 342-4711
EMPLOYEE OWNED
GEOTECHNICAL, ENVIRONMENTAL AND TESTING ENGINEERS SINCE 1921

LOG OF TEST BORING

Client: Michael Baker Jr., Inc.
Project: Corridor H, Section 6 Eastern Alignment
Boring Location: Station 1743+95 Offset 111.0 Lt.
Elevation Ref.: E.L. Robinson

Boring No.: S5-7
Date Started: 10/5/2002
Date Completed: 10/6/2002
Work Order No.: 92143.016

ELEV. ft.	DEPTH ft.	DESCRIPTION OF MATERIALS (color, material description, moisture, stiffness/density/hardness (visual classification unless otherwise noted)	NO.	TYPE	DEPTH ft.	BLOWS/6" (N Value)	REC. %	RQD %	W %	LL %	PI %	HCSI	PPR tsf
		Gray, SILTSTONE, moderately to slightly jointed (0.5' to 1.5' joint spacing) some iron staining, slightly weathered, medium hard – hard (LAYER CONTINUED DESCRIPTION REPEATED)	6	NX	34.0–39.0		96	56				3-4	
822.10	40.0												
		Gray, SILTSTONE, slightly jointed (1.0' to 3.0' joint spacing) slightly to faintly weathered, medium hard – hard. Lost water at 40.0'	7	NX	39.0–44.0		100	88				3-4	
			8	NX	44.0–49.0		100	96				4	
	20.0	1.0' vertical joint at 53.0'	9	NX	49.0–54.0		98	70				4	
			10	NX	54.0–59.0		98	82				4	
802.10	60.0		11	NX	59.0–60.0		100	80				4	
		BORING COMPLETED @ 60.0'											

General Notes
Driller: ETPA
Rig No.: Dave
Rig Type: Truck
Method: NX/SS
Inspector: JRB/BH

Remarks
Moved 11' left offset and 2.8' higher

Water Level Observations
Immediate: NW ft.
At Completion: 4.0 ft.
After 24 Hrs. 19.0 ft.
Water used in drilling: 5.9 ft.
BF = BACKFILLED NW = NO WATER
(Measured from ground surface)

TEST BORING CORR H EASTERN ALIGNMENT.GPJ HC NUTTING.GDT 12/2/02

MOOREFIELD I/C BRIDGE
PROJ. NO. X316-H-100.40 06 HARDY COUNTY

BORING LOGS

SHEET NO. S37 of S45

10443

PUBLIC ROADS DIV.	STATE DIST. NO.	STATE PROJ. NO.	FEDERAL PROJECT NO.	FISCAL YEAR	COUNTY	SHEET NO.	TOTAL SHEETS
WV	5	X316 -H- 100.40 06	APD -0484- (251) C	2003	HARDY	270	670

H.C. NUTTING COMPANY
APPALACHIAN REGION – 912 MORRIS STREET
CHARLESTON, WV 25301 (304) 344-0821
FAX (304) 342-4711
EMPLOYEE OWNED
GEOTECHNICAL, ENVIRONMENTAL AND TESTING ENGINEERS SINCE 1921

LOG OF TEST BORING

Client: Michael Baker Jr., Inc.
Project: Corridor H, Section 8 Eastern Alignment
Boring Location: Station 1743+95 Offset 75.0 Lt.
Elevation Ref.: E.L. Robinson

Boring No.: S5-8
Date Started: 10/3/2002
Date Completed: 10/5/2002
Work Order No.: 92143.016

ELEV. ft.	DEPTH ft.	DESCRIPTION OF MATERIALS (color, material description, moisture, stiffness/density/hardness (visual classification unless otherwise noted))
859.60	0.0	
859.10	0.5	0.5 TOPSOIL
		Brown, GRAVELLY SILTY CLAY with SAND (CL-ML, A-4), moist, very stiff
		9.5 Cobbles and boulders throughout
849.60	10.0	
		Gray, SILTSTONE, laminated, iron stained and broken, highly weathered, soft
		6.0
843.60	16.0	
		Dk. gray, SILTSTONE, laminated, bedded at 40° from horizontal, iron stained joints at 2" to 3" spacing, moderately to slightly weathered, medium hard
840.89		BOTTOM OF ABUTMENT NO. 2
		14.0
829.60	30.0	
		Dk. gray, SILTSTONE, laminated, bedded at 40° from horizontal, pyritic inclusions, slightly weathered, hard
		1" clay filled joint at 31.8'

NO.	TYPE	DEPTH ft.	BLOWS/6" (N Value)	REC. %	RQD %	W %	LL %	PI %	HCSI	PPR tsf
1	SS	0.0–1.5	4-3-3 (6)	33						
2	SS	5.0–5.5	50/0.5	100						
3	SS	10.5–11.5	21-50/0.5	80						
1	NX	11.5–15.5		55	0				2	
2	NX	15.5–20.5		90	0				3	
3	NX	20.5–25.5		100	16				3	
4	NX	25.5–30.5		100	64				3-4	
5	NX	30.5–35.5		100	60				4	

General Notes
Driller: ETPA
Rig No.: Radney
Rig Type: ATV
Method: NX/SS
Inspector: JRB

Remarks

Water Level Observations
Immediate: NW ft.
At Completion: 13.0 ft. ▽
After 24 Hrs. 12.0 ft. ▼
Water used in drilling: 5.5 ft.
BF = BACKFILLED NW = NO WATER
(Measured from ground surface)

TEST BORING CORR H EASTERN ALIGNMENT.GPJ HC NUTTING.GDT 12/2/02

H.C. NUTTING COMPANY
APPALACHIAN REGION – 912 MORRIS STREET
CHARLESTON, WV 25301 (304) 344-0821
FAX (304) 342-4711
EMPLOYEE OWNED
GEOTECHNICAL, ENVIRONMENTAL AND TESTING ENGINEERS SINCE 1921

LOG OF TEST BORING

Client: Michael Baker Jr., Inc.
Project: Corridor H, Section 8 Eastern Alignment
Boring Location: Station 1743+95 Offset 75.0 Lt.
Elevation Ref.: E.L. Robinson

Boring No.: S5-8
Date Started: 10/3/2002
Date Completed: 10/5/2002
Work Order No.: 92143.016

ELEV. ft.	DEPTH ft.	DESCRIPTION OF MATERIALS (color, material description, moisture, stiffness/density/hardness (visual classification unless otherwise noted))
		10.0 Dk. gray, SILTSTONE, laminated, bedded at 40° from horizontal, pyritic inclusions, slightly weathered, hard (LAYER CONTINUED DESCRIPTION REPEATED)
819.60	40.0	
		Dk. gray, SILTSTONE, limey to slightly limey, few fossils present, pyritic inclusions present, faintly weathered, hard UNC = 6440 psi SDI = 97.4%
812.5		
		PRE-DRILLED AND DRIVEN PILE TIP ELEVATION
		20.0
		Broken zone at 56.5' to 57.0'
799.60	60.0	
		BORING COMPLETED @ 60.0'

NO.	TYPE	DEPTH ft.	BLOWS/6" (N Value)	REC. %	RQD %	W %	LL %	PI %	HCSI	PPR tsf
6	NX	35.5–40.5		100	78				4	
7	NX	40.5–45.0		100	89				4	
8	NX	45.0–50.0		100	96				4	
9	NX	50.0–55.0		100	94				4	
10	NX	55.0–60.0		100	92				4	

General Notes
Driller: ETPA
Rig No.: Radney
Rig Type: ATV
Method: NX/SS
Inspector: JRB

Remarks

Water Level Observations
Immediate: NW ft.
At Completion: 13.0 ft. ▽
After 24 Hrs. 12.0 ft. ▼
Water used in drilling: 5.5 ft.
BF = BACKFILLED NW = NO WATER
(Measured from ground surface)

TEST BORING CORR H EASTERN ALIGNMENT.GPJ HC NUTTING.GDT 12/2/02

MOOREFIELD I/C BRIDGE
PROJ. NO. X316-H-100.40 06 HARDY COUNTY

BORING LOGS

SHEET NO. S38 of S45

10443

PUBLIC ROADS DIV	STATE DIST. NO.	STATE PROJ. NO.	FEDERAL PROJECT NO.	FISCAL YEAR	COUNTY	SHEET NO.	TOTAL SHEETS
WV	5	X316 -H- 100.40 06	APD -0484- (251) C	2003	HARDY	271	670

H.C. NUTTING COMPANY

APPALACHIAN REGION – 912 MORRIS STREET
CHARLESTON, WV 25301 (304) 344-0821
FAX (304) 342-4711

EMPLOYEE OWNED

GEOTECHNICAL, ENVIRONMENTAL AND TESTING ENGINEERS SINCE 1921

CORPORATE CENTER 911 LUNDY PARK DRIVE CINCINNATI, OH 45215 (513) 771-5015 FAX (513) 821-0894
CENTRAL OHIO REGION 700 MORRISON ROAD COLUMBUS, OH 43230 (614) 863-3113 FAX (614) 863-0475
INDIANA REGION 340 MAGNUS STREET, STE. G LAWRENCEVILLE, IN 47803 (812) 339-4365 FAX (812) 339-4391
PENNSYLVANIA REGION 470-B COMMERCE CT., STE B-8 WILLIAMSPORT, PA 17701 (570) 433-0505 FAX (570) 433-0530

LOG OF TEST BORING

Client: Michael Baker Jr., Inc.
Project: Corridor H, Section 6 Eastern Alignment
Boring Location: Station 1743+05 Offset 75.0 Rt.
Elevation Ref.: E.L. Robinson

Boring No.: S5-9
Date Started: 10/3/2002
Date Completed: 10/3/2002
Work Order No.: 92143.016

ELEV. ft.	DEPTH ft.	DESCRIPTION OF MATERIALS (color, material description, moisture, stiffness/density/hardness (visual classification unless otherwise noted))
862.00	0.0	
861.00	1.0	TOPSOIL with organics
	1.0	Brown, SILTY SAND with GRAVEL (SM, A-4), moist, medium dense
857.00	5.0	
	4.0	Brown, GRAVELLY SILTY CLAY with SAND (CL-ML, A-4), dry, very dense Boulders throughout
847.70	14.3	
	9.3	Brown to gray, SILTSTONE, laminated, highly jointed and iron stained throughout, highly weathered, medium hard
845.00	17.0	
	2.7	Gray, SILTSTONE, laminated, slightly to medium jointed, slightly weathered, medium hard – hard
838.37	23.7	
	9.5	BOTTOM OF ABUTMENT NO. 1
835.50	26.5	
	8.5	Gray, SILTSTONE, laminated, highly jointed and iron stained, moderately to slightly weathered, medium hard – hard Vertical joints from 27.5' to 30.0'
827.00	35.0	

SAMPLE

NO.	TYPE	DEPTH ft.	BLOWS/6" (N Value)	REC. %	RQD %	W %	LL %	PI %	HCSI	PPR tsf
1	SS	0.0–1.5	2-5-12 (17)	80						
2	SS	5.0–5.3	50/0.3	100						
3	SS	10.0–10.5	50/0.5	80						
1	NX	10.5–15.0		78	0				3	
2	NX	15.0–20.0		98	40				3-4	
3	NX	20.0–25.0		94	50				3-4	
4	NX	25.0–30.0		100	60				3-4	
5	NX	30.0–35.0		98	12				3-4	

General Notes

Driller	ETPA
Rig No.	Dave
Rig Type	Truck
Method	NX/SS
Inspector	BH

Remarks
Boring drilled on stake. Two jars of sample taken per split-spoon. Split core 40-52.

Water Level Observations

Immediate	NW	ft.
At Completion	2.0	ft. ▽
After 24 Hrs.	1.5	ft. ▼
Water used in drilling	5.3	ft.

BF = BACKFILLED NW = NO WATER
(Measured from ground surface)

TEST BORING CORR H EASTERN ALIGNMENT.GPJ HC NUTTING.GDT 12/2/02

H.C. NUTTING COMPANY

APPALACHIAN REGION – 912 MORRIS STREET
CHARLESTON, WV 25301 (304) 344-0821
FAX (304) 342-4711

EMPLOYEE OWNED

GEOTECHNICAL, ENVIRONMENTAL AND TESTING ENGINEERS SINCE 1921

CORPORATE CENTER 911 LUNDY PARK DRIVE CINCINNATI, OH 45215 (513) 771-5015 FAX (513) 821-0894
CENTRAL OHIO REGION 700 MORRISON ROAD COLUMBUS, OH 43230 (614) 863-3113 FAX (614) 863-0475
INDIANA REGION 340 MAGNUS STREET, STE. G LAWRENCEVILLE, IN 47803 (812) 339-4365 FAX (812) 339-4391
PENNSYLVANIA REGION 470-B COMMERCE CT., STE B-8 WILLIAMSPORT, PA 17701 (570) 433-0505 FAX (570) 433-0530

LOG OF TEST BORING

Client: Michael Baker Jr., Inc.
Project: Corridor H, Section 6 Eastern Alignment
Boring Location: Station 1743+05 Offset 75.0 Rt.
Elevation Ref.: E.L. Robinson

Boring No.: S5-9
Date Started: 10/3/2002
Date Completed: 10/3/2002
Work Order No.: 92143.016

ELEV. ft.	DEPTH ft.	DESCRIPTION OF MATERIALS (color, material description, moisture, stiffness/density/hardness (visual classification unless otherwise noted))
		Gray, SILTSTONE, laminated, medium jointed (approximately 40°) slightly to fainty weathered (Dip 40°), medium hard – hard
	25.0	UNC = 950 psi
812.5		
		PRE-DRILLED AND DRIVEN PILE TIP ELEVATION
802.00	60.0	
		BORING COMPLETED @ 60.0'

SAMPLE

NO.	TYPE	DEPTH ft.	BLOWS/6" (N Value)	REC. %	RQD %	W %	LL %	PI %	HCSI	PPR tsf
6	NX	35.0–40.0		100	76				4	
7	NX	40.0–44.0		100	88				4	
8	NX	44.0–48.0		100	95				4	
9	NX	48.0–52.0		100	70				4	
10	NX	52.0–55.0		100	37				4	
11	NX	55.0–60.0		100	50				4	

General Notes

Driller	ETPA
Rig No.	Dave
Rig Type	Truck
Method	NX/SS
Inspector	BH

Remarks
Boring drilled on stake. Two jars of sample taken per split-spoon. Split core 40-52.

Water Level Observations

Immediate	NW	ft.
At Completion	2.0	ft. ▽
After 24 Hrs.	1.5	ft. ▼
Water used in drilling	5.3	ft.

BF = BACKFILLED NW = NO WATER
(Measured from ground surface)

TEST BORING CORR H EASTERN ALIGNMENT.GPJ HC NUTTING.GDT 12/2/02

MOOREFIELD I/C BRIDGE
PROJ. NO. X316-H-100.40 06 HARDY COUNTY

BORING LOGS

SHEET NO. S39 of S45

10443

PUBLIC VOUCHER NO.	STATE DIST. NO.	STATE ROUT. NO.	FEDERAL PROJECT NO.	FISCAL YEAR	COUNTY	SHEET NO.	TOTAL SHEETS
WV	5	X316 -H- 100.40 06	APD -0484- (251) C	2003	HARDY	272	670

H.C. NUTTING COMPANY

APPALACHIAN REGION – 912 MORRIS STREET
CHARLESTON, WV 25301 (304) 344-0821
FAX (304) 342-4711

EMPLOYEE OWNED

GEOTECHNICAL, ENVIRONMENTAL AND TESTING ENGINEERS SINCE 1921

CINCINNATI, OHIO REGION 911 LUNKEN PARK DRIVE CINCINNATI, OH 45226 (513) 321-5816 FAX (513) 321-4694

CENTRAL OHIO REGION 792 MONTGOMERY ROAD COLUMBUS, OH 43214 (614) 885-7110 FAX (614) 885-0375

INDIANA REGION 348 WALNUT STREET, STE 6 LAWRENCEBURG, IN 47025 (812) 537-4388 FAX (812) 537-4391

BLUEGRASS REGION 475-B CORPORATE CT., STE 9-B LEXINGTON, KY 40511 (859) 255-9220 FAX (859) 255-9229

Page 1 of 2

LOG OF TEST BORING

Client: Michael Baker Jr., Inc.
Project: Corridor H, Section 6 Eastern Alignment
Boring Location: Station 1743+05 Offset 100.0 Rt.
Elevation Ref.: E.L. Robinson

Boring No.: S5-10
Date Started: 10/2/2002
Date Completed: 10/2/2002
Work Order No.: 92143.016

ELEV. ft.	DEPTH ft.	DESCRIPTION OF MATERIALS (color, material description, moisture, stiffness/density/hardness (visual classification unless otherwise noted)	SAMPLE NO.	TYPE	DEPTH ft.	BLOWS/6" (N Value)	REC. %	RQD %	W %	LL %	PI %	HCSI	PPR tsf
862.10	0.0												
861.60	0.5	0.5 TOPSOIL with organics (roots)											
		Brown, SILTY SAND with GRAVEL (SM, A-4), moist, medium dense	1	SS	0.0–1.5	2-5-10 (15)	87						
		4.5											
857.10	5.0	Brown, GRAVELLY SILTY CLAY with SAND (CL-ML, A-4), dry, very stiff	2	SS	5.0–5.8	33-50/0.3	75						
		9.0											
			3	SS	10.0–11.5	37-33-35 (68)	83						
848.19	14.0	Brown and gray, SILTSTONE, laminated, highly jointed and iron stained, highly weathered, medium hard	1	NX	11.5–15.0		37	0				3	
		2.5											
845.60	16.5	Gray, SILTSTONE, laminated bedding, slightly jointed, some iron staining at joints, slightly weathered, medium hard hard	2	NX	15.0–19.0		95	20				3-4	
			3	NX	19.0–23.0		100	88				3-4	
		20.3	4	NX	23.0–26.0		100	97				4	
			5	NX	26.0–30.0		100	75				4	
			6	NX	30.0–34.5		98	89				4	

General Notes

Driller	ETPA
Rig No.	Dave
Rig Type	Truck
Method	NX/SS
Inspector	BH

Remarks

Boring drilled on stake. Split Core Barrel from 26.0' to 36.0'.

Water Level Observations

Immediate	NW	ft.
At Completion	13.5	ft. ▼
After 24 Hrs.	24.0	ft. ▼
Water used in drilling	5.7	ft.

BF = BACKFILLED NW = NO WATER
(Measured from ground surface)

TEST BORING CORR H EASTERN ALIGNMENT.GPJ HC NUTTING.GDT 12/2/03

H.C. NUTTING COMPANY

APPALACHIAN REGION – 912 MORRIS STREET
CHARLESTON, WV 25301 (304) 344-0821
FAX (304) 342-4711

EMPLOYEE OWNED

GEOTECHNICAL, ENVIRONMENTAL AND TESTING ENGINEERS SINCE 1921

CINCINNATI CORP. 911 LUNKEN PARK DRIVE CINCINNATI, OH 45226 (513) 321-5816 FAX (513) 321-4694

CENTRAL OHIO REGION 792 MONTGOMERY ROAD COLUMBUS, OH 43214 (614) 885-7110 FAX (614) 885-0375

INDIANA REGION 348 WALNUT STREET, STE 6 LAWRENCEBURG, IN 47025 (812) 537-4388 FAX (812) 537-4391

BLUEGRASS REGION 475-B CORPORATE CT., STE 9-B LEXINGTON, KY 40511 (859) 255-9220 FAX (859) 255-9229

Page 2 of 2

LOG OF TEST BORING

Client: Michael Baker Jr., Inc.
Project: Corridor H, Section 6 Eastern Alignment
Boring Location: Station 1743+05 Offset 100.0 Rt.
Elevation Ref.: E.L. Robinson

Boring No.: S5-10
Date Started: 10/2/2002
Date Completed: 10/2/2002
Work Order No.: 92143.016

ELEV. ft.	DEPTH ft.	DESCRIPTION OF MATERIALS (color, material description, moisture, stiffness/density/hardness (visual classification unless otherwise noted)	SAMPLE NO.	TYPE	DEPTH ft.	BLOWS/6" (N Value)	REC. %	RQD %	W %	LL %	PI %	HCSI	PPR tsf
825.30	36.8	Gray, SILTSTONE, laminated, highly jointed, iron staining at joints, slightly weathered, hard	7	NX	34.5–38.7		98	92				4	
		7.2	8	NX	38.7–41.0		100	48				4	
818.10	44.0		9	NX	41.0–43.7		100	30				4	
		Gray, SILTSTONE, laminated few pyrite joints, slightly weathered, hard	10	NX	43.7–48.7		96	84				4	
		16.0	11	NX	48.7–53.7		96	86				4	
			12	NX	53.7–58.7		100	98				4	
802.10	60.0		13	NX	58.7–60.0		100	0				4	
		BORING COMPLETED @ 60.0'											

General Notes

Driller	ETPA
Rig No.	Dave
Rig Type	Truck
Method	NX/SS
Inspector	BH

Remarks

Boring drilled on stake. Split Core Barrel from 26.0' to 36.0'.

Water Level Observations

Immediate	NW	ft.
At Completion	13.5	ft. ▼
After 24 Hrs.	24.0	ft. ▼
Water used in drilling	5.7	ft.

BF = BACKFILLED NW = NO WATER
(Measured from ground surface)

TEST BORING CORR H EASTERN ALIGNMENT.GPJ HC NUTTING.GDT 12/2/03

MOOREFIELD I/C BRIDGE
PROJ. NO. X316-H-100.40 06 HARDY COUNTY

BORING LOGS

SHEET NO. S40 of S45

10443

FUR:IC ROADS DIV.	STATE DIST. NO.	STATE FISCAL NO.	FEDERAL PROJECT NO.	FISCAL YEAR	COUNTY	SHEET NO.	TOTAL SHEETS
WV	5	X316 -H- 100.40 06	APD -0464- (251) C	2003	HARDY	273	670

H.C. NUTTING COMPANY

APPALACHIAN REGION – 812 MORRIS STREET
CHARLESTON, WV 25301 (304) 344-0821
FAX (304) 342-4711

EMPLOYEE OWNED

GEOTECHNICAL, ENVIRONMENTAL AND TESTING ENGINEERS SINCE 1921

CINCINNATI CORPORATE 811 LUNKEN PARK DRIVE CINCINNATI, OH 45226 (513) 321-0414 FAX (513) 321-0294
COLUMBUS REGION 700 MORRISON ROAD COLUMBUS, OH 43230 (614) 865-5113 FAX (614) 865-5175
INDIANA REGION 545 VALLEY STREET, STE D LAWRENCEBURG, IN 47025 (812) 537-4349 FAX (812) 537-4391
BLUEGRASS REGION 498-B COMMERCE CT., STE B-8 LEXINGTON, KY 40511 (859) 455-8300 FAX (859) 455-8330

Page 1 of 1

LOG OF TEST BORING

Client: Michael Baker Jr., Inc.
Project: Corridor H, Section 6 Eastern Alignment
Boring Location: Station 1743+05 Offset 125.0 Rt.
Elevation Ref.: E.L. Robinson

Boring No.: S5-11
Date Started: 9/25/2002
Date Completed: 10/1/2002
Work Order No.: 92143.016

ELEV. ft.	DEPTH ft.	DESCRIPTION OF MATERIALS (color, material description, moisture, stiffness/density/hardness (visual classification unless otherwise noted)	NO.	TYPE	DEPTH ft.	BLOWS/6" (N Value)	REC. %	RQD %	W %	LL %	PI %	HCSI	PPR tsf
862.18	0.0												
861.68	0.5	0.5 TOPSOIL with organics (roots)											
		Brown, SILTY SAND with GRAVEL (SM, A-4), dry, dense	1	SS	0.0–1.5	10–21–32 (53)	80						
		4.5											
857.18	5.0												
		Brown, GRAVELLY SILTY CLAY with SAND (CL-ML, A-4), wet, dense	2	SS	5.0–5.9	33–50/0.4	85						
		9.7											
			3	SS	10.0–10.8	33–50/0.3	87						
847.48	14.7												
		Brown to gray, SILTSTONE, laminated, highly jointed and iron stained, highly weathered, medium hard	4	SS	15.0–15.0	50/0.0	0						
		3.2	1	NX	15.0–19.0		60	0				3	
844.28	17.9												
		Gray, SILTSTONE, laminated, highly jointed, slightly weathered, medium hard – hard	2	NX	19.0–23.0		88	55				3	
		12.1	3	NX	23.0–26.0		100	100				3–4	
			4	NX	26.0–30.0		100	95				3–4	
832.18	30.0												
		BORING COMPLETED @ 30.0'											

General Notes
Driller: ETPA
Rig No.: Dave
Rig Type: Truck
Method: NX/SS
Inspector: BH

Remarks: Boring drilled on slake.

Water Level Observations
Immediate: NW ft.
At Completion: 6.5 ft.
After: 24 Hrs. caved ft.
Water used in drilling: 5.0 ft.
BF = BACKFILLED NW = NO WATER
(Measured from ground surface)

TEST BORING CORR H EASTERN ALIGNMENT.GPJ HC NUTTING.GDT 12/2/02

H.C. NUTTING COMPANY

APPALACHIAN REGION – 812 MORRIS STREET
CHARLESTON, WV 25301 (304) 344-0821
FAX (304) 342-4711

EMPLOYEE OWNED

GEOTECHNICAL, ENVIRONMENTAL AND TESTING ENGINEERS SINCE 1921

CINCINNATI CORPORATE 811 LUNKEN PARK DRIVE CINCINNATI, OH 45226 (513) 321-0414 FAX (513) 321-0294
COLUMBUS REGION 700 MORRISON ROAD COLUMBUS, OH 43230 (614) 865-5113 FAX (614) 865-5175
INDIANA REGION 545 VALLEY STREET, STE D LAWRENCEBURG, IN 47025 (812) 537-4349 FAX (812) 537-4391
BLUEGRASS REGION 498-B COMMERCE CT., STE B-8 LEXINGTON, KY 40511 (859) 455-8300 FAX (859) 455-8330

Page 1 of 2

LOG OF TEST BORING

Client: Michael Baker Jr., Inc.
Project: Corridor H, Section 6 Eastern Alignment
Boring Location: Station 1743+50 Offset 75.0 Pt.
Elevation Ref.: E.L. Robinson

Boring No.: S5-12
Date Started: 10/2/2002
Date Completed: 10/3/2002
Work Order No.: 92143.016

ELEV. ft.	DEPTH ft.	DESCRIPTION OF MATERIALS (color, material description, moisture, stiffness/density/hardness (visual classification unless otherwise noted)	NO.	TYPE	DEPTH ft.	BLOWS/6" (N Value)	REC. %	RQD %	W %	LL %	PI %	HCSI	PPR tsf
862.50	0.0												
862.00	0.5	0.5 TOPSOIL											
		Brown, GRAVELLY SILTY CLAY with SAND (CL-ML, A-4), trace organics upper 5.0', moist, very stiff	1	SS	0.0–1.5	3–5–17 (22)	87						
		14.0	2	SS	5.0–5.5	50/0.5	100						
			3	SS	10.0–10.8	20–50/0.3	100						
848.00	14.5												
		Gray, SILTSTONE, laminated, jointed and iron stained throughout, highly to moderately weathered, soft – medium hard	4 / 1	SS / NX	14.5–14.5 / 14.5–15.0	50/0.0	0 / 100	0				2–3	
		8.5	2	NX	15.0–20.0		80	0				3	
839.50	23.0												
838.37		Dark gray, SILTSTONE, laminated, bedded at 40° from horizontal, faintly weathered, hard	3	NX	20.0–25.0		100	24				3–4	
		BOTTOM OF ABUTMENT NO. 1											
		Iron stained joint at 27.7° to 28.2°	4	NX	25.0–30.0		100	82				4	
		17.0	5	NX	30.0–35.0		100	98				4	
		Pyritic inclusions at 33.9°											

General Notes
Driller: ETPA
Rig No.: Ronnie
Rig Type: ATV
Method: NX/SS
Inspector: JRB

Remarks

Water Level Observations
Immediate: NW ft.
At Completion: 4.0 ft.
After: 24 Hrs. 1.0 ft.
Water used in drilling: 9.0 ft.
BF = BACKFILLED NW = NO WATER
(Measured from ground surface)

TEST BORING CORR H EASTERN ALIGNMENT.GPJ HC NUTTING.GDT 12/3/02

MOOREFIELD I/C BRIDGE
PROJ. NO. X316-H-100.40 06 HARDY COUNTY

BORING LOGS

SHEET NO. S41 of S45

10443

PUBLIC ROADS DIV.	STATE DIST. NO.	STATE FISCAL NO.	FEDERAL PROJECT NO.	FISCAL YEAR	COUNTY	SHEET NO.	TOTAL SHEETS
WV	6	X316 -H- 100.40 06	APD -0484- (251) C	2003	HARDY	274	670

H.C. NUTTING COMPANY

APPALACHIAN REGION – 912 MORRIS STREET
CHARLESTON, WV 25301 (304) 344-0821
FAX (304) 342-4711

EMPLOYEE OWNED

GEOTECHNICAL, ENVIRONMENTAL AND TESTING ENGINEERS SINCE 1921

LOG OF TEST BORING

Client: Michael Baker Jr., Inc.
Project: Corridor H, Section 6 Eastern Alignment
Boring Location: Station 1743+50 Offset 75.0 ft.
Elevation Ref.: E.L. Robinson

Boring No.: S5-12
Date Started: 10/2/2002
Date Completed: 10/3/2002
Work Order No.: 92143.016

ELEV. ft.	DEPTH ft.	DESCRIPTION OF MATERIALS (color, material description, moisture, stiffness/density/hardness (visual classification unless otherwise noted))	SAMPLE NO.	TYPE	DEPTH ft.	BLOWS/6" (N Value)	REC. %	RQD %	W %	LL %	PI %	HCSI	PPR tsf
822.50	40.0	Dark gray, SILTSTONE, laminated, bedded at 40° from horizontal, faintly weathered, hard (LAYER CONTINUED DESCRIPTION REPEATED)	6	NX	35.0-40.0		100	60				4	
812.5		Dark gray, SILTSTONE, limey to slightly limey, few fossils, few pyritic inclusions, faintly weathered to fresh, hard	7	NX	40.0-45.0		100	100				4	
			8	NX	45.0-50.0		100	92				4	
	20.0	PRE-DRILLED AND DRIVEN PILE TIP ELEVATION	9	NX	50.0-55.0		100	100				4	
802.50	60.0		10	NX	55.0-60.0		100	96				4	
		BORING COMPLETED @ 60.0'											

General Notes
Driller: ETPA
Rig No.: Ronnie
Rig Type: ATV
Method: NX/SS
Inspector: JRB

Remarks

Water Level Observations
Immediate: NW ft.
At Completion: 4.0 ft. ▼
After: 24 Hrs. 1.0 ft. ▼
Water used in drilling: 9.0 ft.
BF = BACKFILLED NW = NO WATER
(Measured from ground surface)

TEST BORING CORR H EASTERN ALIGNMENT.GPJ HC NUTTING.GDT 12/2/02

H.C. NUTTING COMPANY

APPALACHIAN REGION – 912 MORRIS STREET
CHARLESTON, WV 25301 (304) 344-0821
FAX (304) 342-4711

EMPLOYEE OWNED

GEOTECHNICAL, ENVIRONMENTAL AND TESTING ENGINEERS SINCE 1921

LOG OF TEST BORING

Client: Michael Baker Jr., Inc.
Project: Corridor H, Section 6 Eastern Alignment
Boring Location: Station 1743+50 Offset 100.0 ft.
Elevation Ref.: E.L. Robinson

Boring No.: S5-13
Date Started: 9/25/2002
Date Completed: 10/2/2002
Work Order No.: 92143.016

ELEV. ft.	DEPTH ft.	DESCRIPTION OF MATERIALS (color, material description, moisture, stiffness/density/hardness (visual classification unless otherwise noted))	SAMPLE NO.	TYPE	DEPTH ft.	BLOWS/6" (N Value)	REC. %	RQD %	W %	LL %	PI %	HCSI	PPR tsf
862.10	0.0												
861.80	0.5	0.5 TOPSOIL											
		Brown, GRAVELLY SILTY CLAY with SAND (CL-ML, A-4), dry – moist, very stiff	1	SS	0.0-1.3	6-12-50/0.3	92						
		Cobbles and boulder throughout	2	SS	5.0-5.3	50/0.3	33						
	14.5		3	SS	10.0-10.4	50/0.4	75						
847.30	15.0		4	SS	15.0-15.4	50/0.4							
		Gray, SILTSTONE, laminated, bedded at 40° from horizontal, iron stained joints throughout at 1" to 3" spacing, moderately weathered, soft – medium hard	1	NX	15.4-20.0		28	0				2	
	11.7		2	NX	20.0-25.0		88	0				2-3	
835.60	26.7		3	NX	25.0-30.0		100	42				3	
		Dark gray, SILTSTONE, laminated, bedded at 40° from horizontal, slightly weathered, medium hard – hard High angle mineral filled fracture at 27.5' to 28.0											
		SDI = 98.4%	4	NX	30.0-35.0		100	90				4	

General Notes
Driller: ETPA
Rig No.: Ronnie
Rig Type: ATV
Method: NX/SS
Inspector: JRB

Remarks

Water Level Observations
Immediate: NW ft.
At Completion: 14.0 ft. ▼
After: 24 Hrs. caved ft.
Water used in drilling: 5.3 ft.
BF = BACKFILLED NW = NO WATER
(Measured from ground surface)

TEST BORING CORR H EASTERN ALIGNMENT.GPJ HC NUTTING.GDT 12/2/02

MOOREFIELD I/C BRIDGE
PROJ. NO. X316-H-100.40 06 HARDY COUNTY

BORING LOGS

SHEET NO. S42 of S45

10443

PUBLIC ROADS DIV.	STATE DIST. NO.	STATE PROJ. NO.	FEDERAL PROJECT NO.	FISCAL YEAR	COUNTY	SHEET NO.	TOTAL SHEETS
WV	5	X316 -H- 100.40 06	APD -0484- (251) C	2003	HARDY	275	670

H.C. NUTTING COMPANY

APPALACHIAN REGION – 912 MORRIS STREET
CHARLESTON, WV 25301 (304) 344-0821
FAX (304) 342-4711

EMPLOYEE OWNED

GEOTECHNICAL, ENVIRONMENTAL AND TESTING ENGINEERS SINCE 1921

CORPORATE CENTER 810 TUSKAWARAS PLACE SUITE CINCINNATI, OH 45202 (513) 321-5816 FAX (513) 321-0294
CENTRAL OHIO REGION 240 MONROE ROAD COLUMBUS, OH 43230 (614) 863-3113 FAX (614) 863-9472
INDIANA REGION 348 VALIANT STREET, STE B LAWRENCEBURG, IN 47025 (812) 537-0353 FAX (812) 537-4361
BLUEGRASS REGION 678-B CONTROL CT., STE 6-B LEXINGTON, KY 40511 (859) 455-9551 FAX (859) 455-9539

Page 2 of 2

LOG OF TEST BORING

Client: Michael Baker Jr., Inc.
Project: Corridor H, Section 6 Eastern Alignment
Boring Location: Station 1743+50 Offset 100.0 Rt.
Elevation Ref.: E.L. Robinson

Boring No.: S5-13
Date Started: 9/25/2002
Date Completed: 10/2/2002
Work Order No.: 92143.016

ELEV. ft.	DEPTH ft.	DESCRIPTION OF MATERIALS (color, material description, moisture, stiffness/density/hardness (visual classification unless otherwise noted))
	17.6	Dark gray, SILTSTONE, laminated, bedded at 40° from horizontal, slightly weathered, medium hard – hard (LAYER CONTINUED DESCRIPTION REPEATED) Pyritic inclusions beginning at 38.0'
818.00	44.3	Dark gray, SILTSTONE, limey to slightly limey, sporadic fossils throughout, pyritic inclusions throughout, fresh, hard
	15.7	
802.30	60.0	BORING COMPLETED @ 60.0'

SAMPLE NO.	TYPE	DEPTH ft.	BLOWS/6" (N Value)	REC. %	RQD %	W %	LL %	PI %	HCSI	PPR tsf
5	NX	35.0-40.0		100	100				4	
6	NX	40.0-45.0		100	94				4	
7	NX	45.0-50.0		100	100				4	
8	NX	50.0-55.0		100	100				4	
9	NX	55.0-60.0		100	100				4	

General Notes
Driller: ETPA
Rig No.: Ronnie
Rig Type: ATV
Method: NX/SS
Inspector: JRB

Remarks

Water Level Observations
Immediate: NW ft.
At Completion: 14.0 ft. ▽
After 24 Hrs. caved ft.
Water used in drilling: 5.3 ft.
BF = BACKFILLED NW = NO WATER
(Measured from ground surface)

TEST BORING CORR H EASTERN ALIGNMENT.GPJ HC NUTTING.GDT 12/2/02

H.C. NUTTING COMPANY

APPALACHIAN REGION – 912 MORRIS STREET
CHARLESTON, WV 25301 (304) 344-0821
FAX (304) 342-4711

EMPLOYEE OWNED

GEOTECHNICAL, ENVIRONMENTAL AND TESTING ENGINEERS SINCE 1921

CORPORATE CENTER 810 TUSKAWARAS PLACE SUITE CINCINNATI, OH 45202 (513) 321-5816 FAX (513) 321-0294
CENTRAL OHIO REGION 240 MONROE ROAD COLUMBUS, OH 43230 (614) 863-3113 FAX (614) 863-9472
INDIANA REGION 348 VALIANT STREET, STE B LAWRENCEBURG, IN 47025 (812) 537-0353 FAX (812) 537-4361
BLUEGRASS REGION 678-B CONTROL CT., STE 6-B LEXINGTON, KY 40511 (859) 455-9551 FAX (859) 455-9539

Page 1 of 2

LOG OF TEST BORING

Client: Michael Baker Jr., Inc.
Project: Corridor H, Section 6 Eastern Alignment
Boring Location: Station 1743+95 Offset 75.0 Rt.
Elevation Ref.: E.L. Robinson

Boring No.: S5-14
Date Started: 10/2/2002
Date Completed: 10/3/2002
Work Order No.: 92143.016

ELEV. ft.	DEPTH ft.	DESCRIPTION OF MATERIALS (color, material description, moisture, stiffness/density/hardness (visual classification unless otherwise noted))
863.20	0.0	
862.70	0.5	0.5 TOPSOIL
		Brown, GRAVELLY SILTY CLAY with SAND (CL-ML, A-4), moist, very stiff
	15.0	
		Cobbles and boulders throughout
847.70	15.5	
		Gray, SILTSTONE, laminated, jointed and iron stained throughout, highly to moderately weathered, soft – medium hard
	7.8	
839.90	23.3	
838.37		Dark gray, SILTSTONE, laminated, bedded at 40° from horizontal, moderately jointed, pyrite present along joint surfaces, slightly weathered, hard
		BOTTOM OF ABUTMENT NO. 1
		Broken zone at 33.5' to 34.5'

SAMPLE NO.	TYPE	DEPTH ft.	BLOWS/6" (N Value)	REC. %	RQD %	W %	LL %	PI %	HCSI	PPR tsf
1	SS	0.0-1.5	7-10-21 (31)	100						
2	SS	5.0-6.0	28-50/0.5	80						
3	SS	10.0-10.3	50/0.3	67						
4	SS	15.5-15.2	44-50/0.2	100						
1	NX	16.2-20.5		72	0				2-3	
2	NX	20.5-25.5		100	30				3-4	
3	NX	25.5-30.5		100	48				3-4	
4	NX	30.5-35.5		100	72				4	

General Notes
Driller: ETPA
Rig No.: Rooney
Rig Type: ATV
Method: NX/SS
Inspector: JRB

Remarks
Poor RQD due to mechnical breaks from chattering of drill rods.

Water Level Observations
Immediate: NW ft.
At Completion: 7.0 ft. ▽
After 24 Hrs. 13.0 ft. ▼
Water used in drilling: 6.5 ft.
BF = BACKFILLED NW = NO WATER
(Measured from ground surface)

TEST BORING CORR H EASTERN ALIGNMENT.GPJ HC NUTTING.GDT 12/2/02

MOOREFIELD I/C BRIDGE
PROJ. NO. X316-H-100.40 06 HARDY COUNTY

BORING LOGS

SHEET NO. S43 of S45

10443

PUBLIC ROADS DIV.	STATE ORIG. NO.	STATE PROJ. NO.	FEDERAL PROJECT NO.	FISCAL YEAR	COUNTY	SHEET NO.	TOTAL SHEETS
WV	5	X316 -H- 100.40 06	APD -0484- (251) C	2003	HARDY	276	670

H.C. NUTTING COMPANY

APPALACHIAN REGION – 912 MORRIS STREET
CHARLESTON, WV 25301 (304) 344-0821
FAX (304) 342-4711

EMPLOYEE OWNED

GEOTECHNICAL, ENVIRONMENTAL AND TESTING ENGINEERS SINCE 1921

CORPORATE CENTER: 911 LUNKEN PARK DRIVE, CINCINNATI, OH 45226, (513) 321-5816, FAX (513) 321-6291
CENTRAL OHIO REGION: 798 SCHROCK ROAD, COLUMBUS, OH 43229, (614) 885-5115, FAX (614) 885-5126
INDIANA REGION: 348 WALNUT STREET, STE E, LAWRENCEBURG, IN 47025, (812) 539-4300, FAX (812) 539-4301
BLUEGRASS REGION: 429-B COMMERCE CT., STE B-8, LEXINGTON, KY 40511, (859) 455-9530, FAX (859) 455-9540

Page 2 of 2

LOG OF TEST BORING

Client: Michael Baker Jr., Inc.
Project: Corridor H, Section 6 Eastern Alignment
Boring Location: Station 1743+95 Offset 75.0 Rt.
Elevation Ref.: E.L. Robinson

Boring No.: S5-14
Date Started: 10/2/2002
Date Completed: 10/3/2002
Work Order No.: 92143.016

ELEV. ft.	DEPTH ft.	DESCRIPTION OF MATERIALS (color, material description, moisture, stiffness/density/hardness (visual classification unless otherwise noted)	NO.	TYPE	DEPTH ft.	BLOWS/6" (N Value)	REC. %	RQD %	W %	LL %	PI %	HCSI	PPR tsf
		Dark gray, SILTSTONE, laminated, bedded at 40° from horizontal, moderately jointed, pyrite present along joint surfaces, slightly weathered, hard (LAYER CONTINUED DESCRIPTION REPEATED)	5	NX	35.5–40.5		100	26				4	
	38.7		6	NX	40.5–45.5		100	10				4	
812.5		SDI = 97.2%	7	NX	45.5–50.5		100	26				4	
		PRE-DRILLED AND DRIVEN PILE TIP ELEVATION Broken zone at 52.8' to 53.0' Broken zone at 53.4' to 53.6' Broken zone at 53.8' to 54.0'	8	NX	50.5–55.5		100	8				4	
803.20	60.0	Fresh 1.5' stick at 58.5' to 60.0' BORING COMPLETED @ 60.0'	9	NX	55.5–60.0		100	33				4	

General Notes
Driller: ETPA
Rig No.: Rodney
Rig Type: ATV
Method: NX/SS
Inspector: JRB

Remarks
Poor RQD due to mechnical breaks from chattering of drill rods.

Water Level Observations
Immediate: NW ft.
At Completion: 7.0 ft.
After 24 Hrs. 13.0 ft.
Water used in drilling: 6.5 ft.
BF = BACKFILLED NW = NO WATER
(Measured from ground surface)

TEST BORING CORR H EASTERN ALIGNMENT.GPJ HC NUTTING.GDT 12/2/02

H.C. NUTTING COMPANY

APPALACHIAN REGION – 912 MORRIS STREET
CHARLESTON, WV 25301 (304) 344-0821
FAX (304) 342-4711

EMPLOYEE OWNED

GEOTECHNICAL, ENVIRONMENTAL AND TESTING ENGINEERS SINCE 1921

CORPORATE CENTER: 911 LUNKEN PARK DRIVE, CINCINNATI, OH 45226, (513) 321-5816, FAX (513) 321-6291
CENTRAL OHIO REGION: 798 SCHROCK ROAD, COLUMBUS, OH 43229, (614) 885-5115, FAX (614) 885-5126
INDIANA REGION: 348 WALNUT STREET, STE E, LAWRENCEBURG, IN 47025, (812) 539-4300, FAX (812) 539-4301
BLUEGRASS REGION: 429-B COMMERCE CT., STE B-8, LEXINGTON, KY 40511, (859) 455-9530, FAX (859) 455-9540

Page 1 of 2

LOG OF TEST BORING

Client: Michael Baker Jr., Inc.
Project: Corridor H, Section 6 Eastern Alignment
Boring Location: Station 1743+95 Offset 100.0 Rt.
Elevation Ref.: E.L. Robinson

Boring No.: S5-15
Date Started: 9/25/2002
Date Completed: 10/2/2002
Work Order No.: 92143.016

ELEV. ft.	DEPTH ft.	DESCRIPTION OF MATERIALS (color, material description, moisture, stiffness/density/hardness (visual classification unless otherwise noted)	NO.	TYPE	DEPTH ft.	BLOWS/6" (N Value)	REC. %	RQD %	W %	LL %	PI %	HCSI	PPR tsf
863.50	0.0												
862.80	0.5	0.5 TOPSOIL											
		Brown, GRAVELLY SILTY CLAY with SAND (CL-ML, A-4), dry, very stiff	1	SS	0.0–1.5	12-25-38 (63)	100						
			2	SS	5.0–5.5	50/0.5	100						
	14.2		3	SS	10.0–10.4	50/0.4	0						
848.60	14.7												
		Brown to gray, SILTSTONE, laminated, bedded at 40° from horizontal, jointed and iron stained, highly weathered upper 0.5', joint spacing 1" to 3", moderately weathered, soft – medium hard	1	NX	14.5–15.5		100	0				2	
	7.8		2	NX	15.5–20.5		95	0				2–3	
840.80	22.5												
		Dark gray, SILTSTONE, laminated, bedded at 40° from horizontal, few iron stained joints to 35.0', few slickensided joints, moderately to slightly weathered, medium hard – hard High angle iron stained fracture at 24.5' to 25.5' Broken zone at 25.9' to 26.1'	3	NX	20.5–24.5		98	28				3	
			4	NX	24.5–28.0		89	49				3–4	
		UNC = 1160 psi	5	NX	28.0–30.5		76	44				3–4	
			6	NX	30.5–35.5		100	18				3–4	

General Notes
Driller: ETPA
Rig No.: Rodney
Rig Type: ATV
Method: NX/SS
Inspector: JRB

Remarks

Water Level Observations
Immediate: NW ft.
At Completion: 14.5 ft.
After 24 Hrs. 4.0 ft.
Water used in drilling: 9.0 ft.
BF = BACKFILLED NW = NO WATER
(Measured from ground surface)

TEST BORING CORR H EASTERN ALIGNMENT.GPJ HC NUTTING.GDT 12/2/02

MOOREFIELD I/C BRIDGE
PROJ. NO. X316-H-100.40 06 HARDY COUNTY

BORING LOGS

SHEET NO. S44 of S45

10443

PUBLIC ROADS DIV	STATE DIST. NO.	STATE PROJ. NO.	FEDERAL PROJECT NO.	FISCAL YEAR	COUNTY	SHEET NO.	TOTAL SHEETS
WV	5	X316 -H- 100.40 06	APD -0484- (251) C	2003	HARDY	277	670

H.C. NUTTING COMPANY

APPALACHIAN REGION – 912 MORRIS STREET, CHARLESTON, WV 25301 (304) 344-0821 FAX (304) 342-4711

EMPLOYEE OWNED

GEOTECHNICAL, ENVIRONMENTAL AND TESTING ENGINEERS SINCE 1921

CORPORATE CENTER 911 LINDEN PARK DRIVE CINCINNATI, OH 45215 (513) 351-9410 FAX (513) 351-9254

CENTRAL OHIO REGION 796 MONTGOMERY ROAD CHILLICOTHE, OH 45601 (614) 663-1118 FAX (614) 663-0408

INDIANA REGION 542 BRADLEY STREET, STE 6 LAFAYETTE, IN 47905 (765) 538-4323 FAX (765) 423-7491

KENTUCKY REGION 479-B CONNECT CT., STE B-8 LEXINGTON, KY 40511 (859) 455-9930 FAX (859) 455-9930

Page 2 of 2

LOG OF TEST BORING

Client: Michael Baker Jr., Inc.
Project: Corridor H, Section 6 Eastern Alignment
Boring Location: Station 1743+95 Offset 100.0 Rt.
Elevation Ref.: E.L. Robinson

Boring No.: S5-15
Date Started: 9/25/2002
Date Completed: 10/2/2002
Work Order No.: 92143.016

ELEV. ft.	DEPTH ft.	DESCRIPTION OF MATERIALS (color, material description, moisture, stiffness/density/hardness (visual classification unless otherwise noted))	SAMPLE NO.	TYPE	DEPTH ft.	BLOWS/6" (N Value)	REC. %	RQD %	W %	LL %	PI %	HCSI	PPR tsf
		Dark gray, SILTSTONE, laminated, bedded at 40° from horizontal, few iron stained joints to 36.0', few slickensided joints, moderately to slightly weathered, medium hard – hard (LAYER CONTINUED DESCRIPTION REPEATED)	7	NX	35.5-40.5		100	40				3-4	
		Fractured zone at 33.8' to 36.3'	8	NX	40.5-45.5		96	48				4	
			9	NX	45.5-50.5		100	26				4	
			10	NX	50.5-55.5		100	42				4	
			11	NX	55.5-60.0		100	49				4	
37.5													
803.30	60.0	BORING COMPLETED @ 60.0'											

General Notes
Driller: ETPA
Rig No.: Rodney
Rig Type: ATV
Method: NX/SS
Inspector: JRB

Remarks

Water Level Observations
Immediate: NW ft.
At Completion: 14.5 ft. ▽
After: 24 Hrs. 4.0 ft. ▼
Water used in drilling: 9.0 ft.
BF = BACKFILLED NW = NO WATER
(Measured from ground surface)

TEST BORING CORR H EASTERN ALIGNMENT.GPJ HC NUTTING.GDT 12/2/02

H.C. NUTTING COMPANY

APPALACHIAN REGION – 912 MORRIS STREET, CHARLESTON, WV 25301 (304) 344-0821 FAX (304) 342-4711

EMPLOYEE OWNED

GEOTECHNICAL, ENVIRONMENTAL AND TESTING ENGINEERS SINCE 1921

CORPORATE CENTER 911 LINDEN PARK DRIVE CINCINNATI, OH 45215 (513) 351-9410 FAX (513) 351-9254

CENTRAL OHIO REGION 796 MONTGOMERY ROAD CHILLICOTHE, OH 45601 (614) 663-1118 FAX (614) 663-0408

INDIANA REGION 542 BRADLEY STREET, STE 6 LAFAYETTE, IN 47905 (765) 538-4323 FAX (765) 423-7491

KENTUCKY REGION 479-B CONNECT CT., STE B-8 LEXINGTON, KY 40511 (859) 455-9930 FAX (859) 455-9930

Page 1 of 1

LOG OF TEST BORING

Client: Michael Baker Jr., Inc.
Project: Corridor H, Section 6 Eastern Alignment
Boring Location: Station 1743+35 Offset 125.0 Rt.
Elevation Ref.: E.L. Robinson

Boring No.: S5-16
Date Started: 9/25/2002
Date Completed: 9/25/2002
Work Order No.: 92143.016

ELEV. ft.	DEPTH ft.	DESCRIPTION OF MATERIALS (color, material description, moisture, stiffness/density/hardness (visual classification unless otherwise noted))	SAMPLE NO.	TYPE	DEPTH ft.	BLOWS/6" (N Value)	REC. %	RQD %	W %	LL %	PI %	HCSI	PPR tsf
863.45	0.0												
862.95	0.5	TOPSOIL											
		Brown, SILTY SAND with GRAVEL (SM, A-4), dry, dense	1	SS	0.0-1.5	14-29-31 (59)	80						
858.45	5.0												
		Brown, GRAVELLY SILTY CLAY with SAND (CL-ML, A-4), boulders throughout, very moist, dense	2	SS	5.0-5.0	50/0.0							
			3	SS	10.0-11.5	29-20-28 (48)	87						
849.95	13.5												
		Gray, SILTSTONE, laminated, highly jointed, iron stained, moderately weathered, medium hard	1	NX	13.5-15.0		93	0				3	
844.95	18.5		2	NX	15.0-20.0		86	0				3	
		Gray, SILTSTONE, laminated, highly jointed, iron stained at joints, slightly weathered, medium hard – hard	3	NX	20.0-24.5		100	24				3-4	
838.95	24.5												
		Gray, SILTSTONE, laminated, slightly to moderately jointed, slightly weathered, 40° dip, medium hard – hard	4	NX	24.5-29.0		100	84				3-4	
		SDI = 98.1%	5	NX	29.0-30.0		40	40				3-4	
833.45	30.0	BORING COMPLETED @ 30.0'											

General Notes
Driller: ETPA
Rig No.: Dave
Rig Type: Truck
Method: NX/SS
Inspector: BH

Remarks
Boring drilled on stake.

Water Level Observations
Immediate: NW ft.
At Completion: 1.0 ft. ▽
After: 24 Hrs. 3.0 ft. ▼
Water used in drilling: 2.5 ft.
BF = BACKFILLED NW = NO WATER
(Measured from ground surface)

TEST BORING CORR H EASTERN ALIGNMENT.GPJ HC NUTTING.GDT 12/2/02

MOOREFIELD I/C BRIDGE
PROJ. NO. X316-H-100.40 06 HARDY COUNTY

BORING LOGS

SHEET NO. S45 of S45

10443

10/22/2003

State Project No.	Federal Project No.	State Dist. No.	Fiscal Year	County	Sheet No.	Total Sheets
X316-H-100.40 06	APD 0484(251)C	5	2003	HARDY	278	670

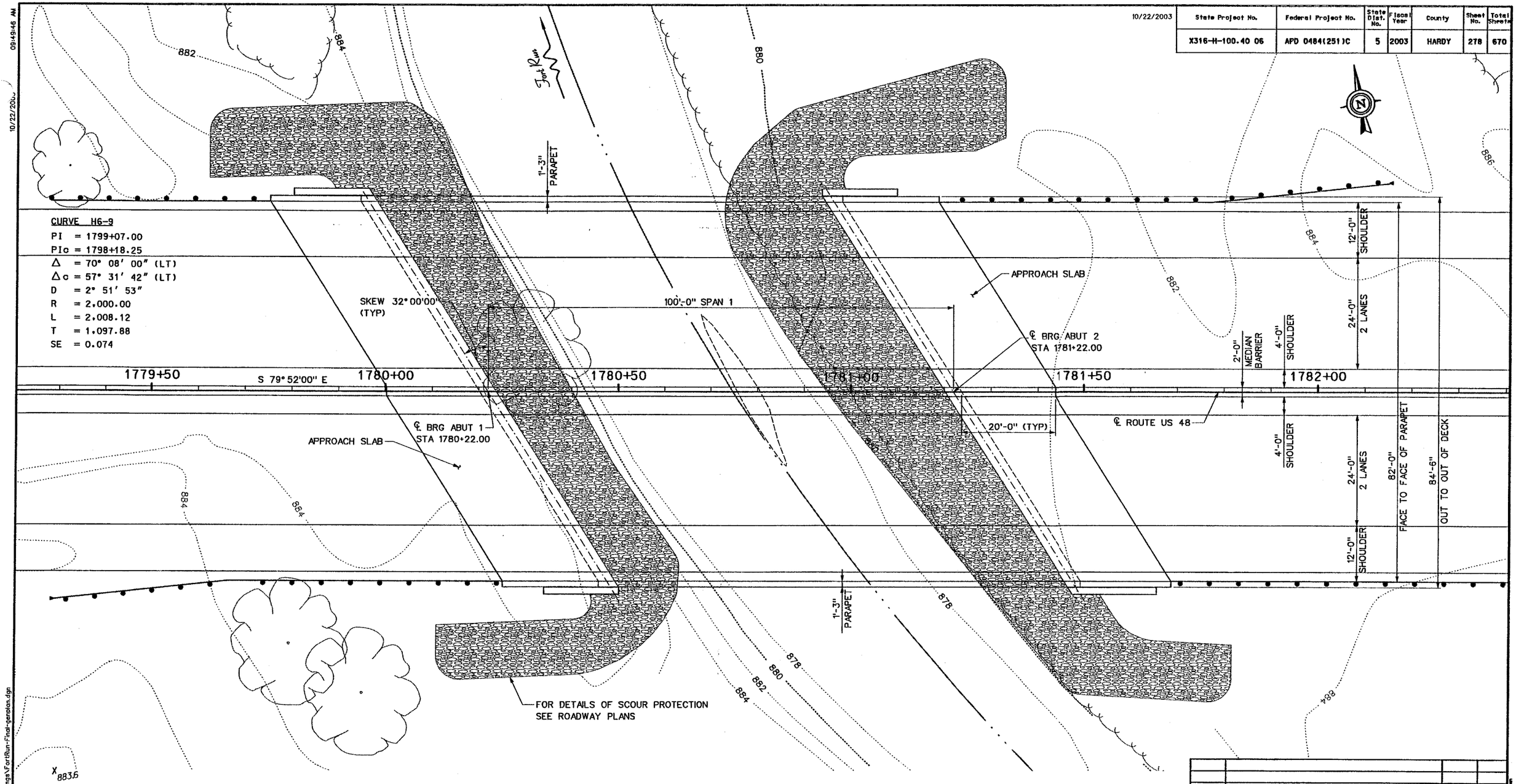

PLAN

NO.	REVISION	DATE:	BY:

DESIGN DESIGNATION

A.D.T. (2003) = 10,350

A.D.T. (2023) = 18,600

D.H.V. = 1860

D = 60/40

T = 10%

V = 65MPH

NOTES:

1. PROPOSED RIGHT OF WAY IS LOCATED APPROXIMATELY 120 FEET OFFSET EITHER SIDE OF BASELINE OF US ROUTE 48. SEE ROADWAY PLANS.

2. FOR SCOUR PROTECTION SEE ROADWAY PLANS.

SCALE : 0 10 ft.

DESIGNED	JDD	06/03
DRAWN	MAD	06/03
CHECKED	PCM	06/03
CHECKED	AJT	06/03

W. VA. DEPARTMENT OF TRANSPORTATION
DIVISION OF HIGHWAYS

ROUTE US 48
MOOREFIELD DISTRICT
FORT RUN BRIDGE
GENERAL PLAN

Baker
Michael Baker Jr., Inc. Charleston, W.Va.

SHEET S1 OF S40

BRIDGE NO. 10444

L:\proj\CorridorH\Bridge\Fort Run\Final\Drawings\FortRun-Final-genplan.dgn

10/22/2003 09:49:46 AM

10/22/2003	State Project No.	Federal Project No.	State Dist. No.	Fiscal Year	County	Sheet No.	Total Sheets
	X316-H-100.40 06	APD 0484(251)C	5	2003	HARDY	279	670

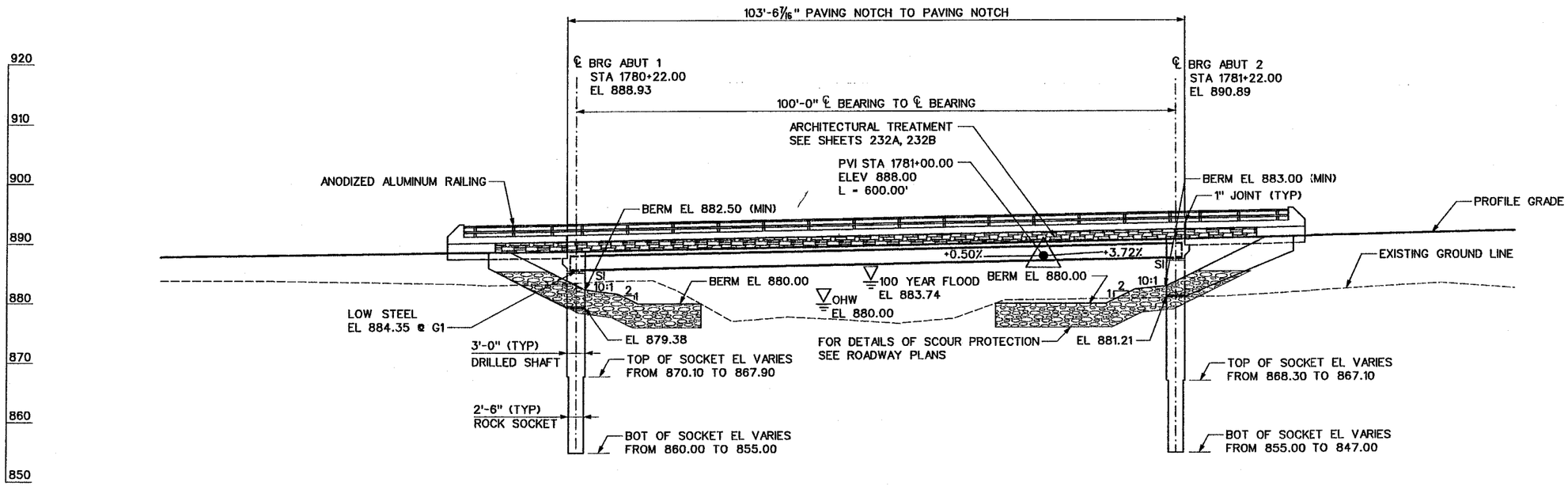

ELEVATION

HYDRAULIC DATA			
DRAINAGE AREA = 11.47SQ MILES	Q50	Q100	Q500
Q (FT^3/S)	2288	2703	3987
VELOCITY (FT/S)	8.69	9.38	10.54
WS ELEV (FT)	883.15	883.74	885.44
SCOUR ELEVATION (FT)	-	874.10	869.90

NOTE:
LOW WATER SURFACE ELEVATION = 877.00' UNDER DRY CONDITIONS.

LEGEND

SI = SEMI-INTEGRAL ABUTMENT

SCALE : 0 10 ft.

NO.	REVISION	DATE:	BY:

	DATE
DESIGNED JDD	06/03
DRAWN JLH	06/03
CHECKED PCM	06/03
CHECKED AJT	06/03

W. VA. DEPARTMENT OF TRANSPORTATION
DIVISION OF HIGHWAYS

ROUTE US 48
MOOREFIELD DISTRICT
FORT RUN BRIDGE
ELEVATION VIEW

Baker
Michael Baker Jr., Inc. Charleston, W.Va.

SHEET S2 OF S40
BRIDGE NO. 10444

09:48:12 AM 10/22/2003
L:\proj\Corridor H\S... \Bridge\Fort Run\Final\Drawings\FortRun-Final-genelev.dgn