10/22/2003 09:48:39 AM

10/22/2003	State Project No.	Federal Project No.	State Dist. No.	Fiscal Year	County	Sheet No.	Total Sheets
	X316-H-100.40 06	APD 0484(251)C	5	2003	HARDY	280	670

GENERAL NOTES

GOVERNING SPECIFICATIONS

THE WEST VIRGINIA DEPARTMENT OF TRANSPORTATION, DIVISION OF HIGHWAYS, STANDARD SPECIFICATIONS, ROADS AND BRIDGES, ADOPTED 2000, AND THE WEST VIRGINIA DEPARTMENT OF TRANSPORTATION, DIVISION OF HIGHWAYS SUPPLEMENTAL SPECIFICATIONS DATED JANUARY 1, 2003, THE CONTRACT PLANS, AND THE CONTRACT DOCUMENTS ARE THE GOVERNING PROVISIONS APPLICABLE TO THIS PROJECT.

DESIGN

THE BRIDGE DESIGN IS IN ACCORDANCE WITH THE AASHTO LRFD BRIDGE DESIGN SPECIFICATIONS, CUSTOMARY U.S. UNITS, SECOND EDITION, 1998, INCLUDING 1999, 2000, 2001, 2002, AND 2003 INTERIM SPECIFICATIONS.

THE STRUCTURE HAS BEEN DESIGNED FOR A LIVE LOAD CAPACITY OF 6 LANES OF HL-93 VEHICULAR LOAD.

THE DESIGN PROVIDES FOR PERMANENT METAL DECK FORMS (15 PSF INCLUDING CONCRETE) AND A FUTURE WEARING SURFACE ON THE ROADWAY (25 PSF). PERMANENT METAL DECK FORMS ARE TO BE DESIGNED BY THE CONTRACTOR IN ACCORDANCE WITH THE SUPPLEMENTAL SPECIFICATIONS.

THE STRUCTURE IS DESIGNED FOR SEISMIC PERFORMANCE CATEGORY A.

NO ANALYSIS FOR REDECKING OF THE BRIDGE HAS BEEN CONDUCTED.

THE DECK SLAB HAS BEEN DESIGNED IN ACCORDANCE WITH THE EMPIRICAL DESIGN PROCESS INCLUDED IN THE AASHTO LRFD BRIDGE DESIGN SPECIFICATIONS, SECOND EDITION, DATED 1998, INCLUDING 1999, 2000, 2001, 2002, AND 2003 INTERIM SPECIFICATIONS.

THE SUPERSTRUCTURE HAS BEEN DESIGNED AS A COMPOSITE SECTION FOR THE FULL LENGTH OF THE BRIDGE. 1/4" OF CONCRETE DECK SLAB THICKNESS HAS BEEN REMOVED FROM SECTION PROPERTIES FOR DESIGN TO PROVIDE FOR GRINDING, GROOVING, AND SACRIFICIAL SURFACE.

DESIGN UNIT STRESSES

CONCRETE:
- CLASS H CONCRETE, f'c = 4.0 KSI, n = 8
- CLASS H CONCRETE, ARCHITECTURAL 4.0 KSI
- CLASS B CONCRETE, f'c = 3.0 KSI
- CLASS B CONCRETE, MODIFIED f'c = 4,500 PSI

REINFORCING STEEL:
- AASHTO M31, GRADE 60, Fy = 60 KSI

STRUCTURAL STEEL:
- AASHTO M270 GRADE 50W, Fy = 50 KSI

CONCRETE

CONCRETE FOR BRIDGE DECK SHALL BE CLASS H, PARAPETS SHALL BE CLASS H CONCRETE, ARCHITECTURAL, MEDIAN BARRIER SHALL BE CLASS H, ABUTMENTS, WINGWALLS, FOOTINGS SHALL BE CLASS B CONCRETE, AND DRILLED SHAFTS SHALL BE MODIFIED CLASS B CONCRETE.

A WATER-REDUCING AND RETARDING ADMIXTURE IN ACCORDANCE WITH THE SPECIAL PROVISIONS AND 707.2 OF THE STANDARD SPECIFICATION SHALL BE USED IN ALL DECK CONCRETE. PAYMENT SHALL BE INCLUDED IN THE BID PRICE FOR ITEM 601009-001, CLASS H CONCRETE. RETARDER WILL NOT BE REQUIRED BELOW 50°F. THE CONTRACTOR'S ATTENTION IS CALLED TO THE TEST REQUIREMENTS FOR THE RETARDER ADMIXTURE.

CHAMFER ALL EXPOSED EDGES OF SUBSTRUCTURE CONCRETE 1" X 1" AND SUPERSTRUCTURE CONCRETE 3/4" X 3/4" UNLESS OTHERWISE NOTED.

ALL CONCRETE SHALL BE FINISHED IN ACCORDANCE WITH THE REQUIREMENTS OF SECTION 601.11 OF THE SPECIFICATIONS.

CAST-IN-PLACE CONCRETE SHALL BE CURED IN ACCORDANCE WITH SUBSECTION 601.12 OF THE SPECIFICATIONS. IF USED, POLYETHYLENE COATED BURLAP SHALL CONFORM TO THE REQUIREMENTS OF SUBSECTION 707.6 OF THE STANDARD SPECIFICATIONS. ALL CONCRETE SHALL RECEIVE A SEVEN DAY WET CURE.

THE CLEAR DISTANCE BETWEEN REINFORCING STEEL AND THE FACE OF CONCRETE SHALL BE AS FOLLOWS UNLESS NOTED, OTHERWISE:

TOP OF DECK SLAB - 2 1/2"
BOTTOM OF DECK SLAB - 1"
PARAPETS - 1 1/2"
ABUTMENT AND DRILLED SHAFT CONCRETE CAST AGAINST AND PERMANENTLY EXPOSED TO EARTH - 3"
ALL OTHER LOCATIONS - 2"

WHENEVER CONCRETE IS PLACED USING A CONCRETE PUMP, A STANDBY CONCRETE PUMP SHALL BE PROVIDED AS A BACKUP TO AVOID INTERRUPTION TO THE CONCRETE PLACEMENT CAUSED BY A BREAKDOWN OF THE ORIGINAL PUMP.

BEARING SEATS ON ABUTMENTS, UPON WHICH BEARING DEVICES WILL BE SET, SHALL BE FINISHED TO THE TRUE ELEVATIONS AS SHOWN ON THE PLANS.

HORIZONTAL CONSTRUCTION JOINTS SHOWN ON THE PLANS SHALL BE ROUGHENED UNLESS NOTED OTHERWISE.

THE EXPOSED SURFACES OF THE ABUTMENTS AND ALL SURFACES OF THE BARRIERS ON THE BRIDGE DECK, ON THE APPROACH SLABS, AND ON THE APPROACH ROADWAY BARRIERS WHICH DO NOT HAVE ARCHITECTURAL TREATMENT SHALL BE CLASS 2, RUBBED FINISH IN ACCORDANCE WITH SUBSECTION 601.11.2 OF THE STANDARD SPECIFICATIONS. THE BRIDGE DECK SHALL BE FINISHED IN ACCORDANCE WITH SUBSECTION 601.11.4 OF THE STANDARD SPECIFICATIONS.

ADDITION OF EXTRA BAG OF CEMENT IN ORDER TO ACHIEVE HIGH EARLY STRENGTH AND REDUCE THE 7-DAY WET CURE SHALL NOT BE PERMITTED FOR ALL CLASSES OF CONCRETE.

PROTECTION OF CONCRETE SUBSTRUCTURE

BEFORE PLACING ANY STEEL SUPERSTRUCTURE MEMBERS ON THE CONCRETE SUBSTRUCTURE UNITS, COAT ALL EXPOSED AREAS OF THE ABUTMENT TO THE GROUND ELEVATION WITH AN APPROVED SILANE-BASED CONCRETE SEALER. PREPARATION OF SURFACES, APPLICATION RATES, AND METHODS SHALL BE AS RECOMMENDED BY THE SEALER MANUFACTURER.

TAKE APPROPRIATE MEASURES TO PROTECT THE CONCRETE SUBSTRUCTURE FROM RUST STAINING DURING CONSTRUCTION AND CURING OF THE SUPERSTRUCTURE CONCRETE. DEFLECT WATER RUNOFF FROM CURING OPERATIONS AWAY FROM THE STEEL GIRDERS AND DO NOT ALLOW WATER TO DRAIN ONTO THE SUBSTRUCTURE CONCRETE AFTER COMING INTO CONTACT WITH THE WEATHERING STEEL.

UPON COMPLETION OF ALL SUPERSTRUCTURE CONCRETE CURING OPERATIONS, REMOVE ALL RUST STAINS FROM SUBSTRUCTURE UNITS USING PROPRIETARY CHEMICAL STAIN REMOVERS OR MILD ACID ETCHING. USE ABRASIVE BLAST CLEANING TO SUPPLEMENT THE OTHER CLEANING METHODS IF THE STAINED AREAS ARE SEVERE OR EXTENSIVE. ALL CLEANING METHODS SHALL BE SUBJECT TO APPROVAL BY THE ENGINEER.

RE-COAT SUBSTRUCTURE CONCRETE AT ALL AREAS WHERE RUST STAINS WERE REMOVED, REGARDLESS OF THE CLEANING METHOD USED, WITH AN APPROVED SILANE-BASED CONCRETE SEALER AS SPECIFIED ABOVE.

INCLUDE THE COST OF SILANE COATING, PROTECTING, CLEANING AND RECOATING SUBSTRUCTURE UNITS IN CLASS B CONCRETE, 601002.

CONCRETE FORMING AND FALSEWORK

PERMANENT METAL DECK FORMS SHALL BE USED IN PLACING THE DECK CONCRETE IN ACCORDANCE WITH SECTION 601.

DECK SLAB OVERHANG FORMS SHALL BE SUPPORTED FROM THE BOTTOM FLANGE OF FASCIA GIRDERS OR STRINGERS. THE CONTRACTOR SHALL SUBMIT FORMING PLANS AND SUPPORTING CALCULATIONS FOR THE OVERHANG TO THE ENGINEER FOR REVIEW PRIOR TO ERECTING THE FORMWORK. DESIGN OF FORMING AND FALSEWORK SHALL BE BY A PROFESSIONAL ENGINEER REGISTERED IN THE STATE OF WEST VIRGINIA, WHO SHALL ALSO VERIFY THAT THE DESIGN IS UTILIZED.

FORM SYSTEMS THAT WILL CAUSE OVERSTRESS OR DEFORMATION TO PERMANENT BRIDGE MEMBERS SHALL NOT BE PERMITTED. THE CONTRACTOR SHALL SUBMIT CALCULATIONS VERIFYING THAT THIS REQUIREMENT IS SATISFIED.

CONCRETE FORMING SHALL BE IN ACCORDANCE WITH SECTION 601.8.

NO SLIP-FORMING OF PARAPETS OR MEDIAN BARRIER WILL BE PERMITTED.

DECK POURING SEQUENCE

THE DECK PLACEMENT SEQUENCE IS SHOWN BY POUR NUMBERS ON THE DECK PLANS. DECK CONCRETE MUST ATTAIN A MINIMUM STRENGTH OF 2000 PSI BEFORE ADJACENT POURS ARE MADE.

REINFORCING STEEL BARS

BARS SHALL CONFORM TO AASHTO M31 GRADE 60, PAYMENT WILL BE MADE UNDER ITEM 602002-001, EPOXY COATED REINFORCING STEEL BAR OR ITEM 602001-001, REINFORCING STEEL BAR.

ALL BARS IN THE DECK SLAB, MEDIAN BARRIER, PARAPETS, APPROACH SLABS, AND PORTIONS OF THE ABUTMENTS SHALL BE EPOXY COATED. EPOXY COATED BARS ARE LABELED WITH THE PREFIX 'E'.

ALL REINFORCEMENT SHALL BE LAPPED A MINIMUM OF 40 BAR DIAMETERS UNLESS SHOWN OTHERWISE ON THE PLANS. EMBEDMENT DIMENSIONS FOR REINFORCING ARE CLEAR DIMENSION UNLESS NOTED. BAR SPACING IS GIVEN TO THE CENTERLINE OF THE BAR.

STRUCTURAL STEEL

INCLUDE ALL STRUCTURAL STEEL COMPLETE IN PLACE INCLUDING PAINTING AND GALVANIZING IN THE LUMP SUM PRICE BID FOR ITEM 615001-001.

ALL STRUCTURAL STEEL SHALL BE AASHTO M270 GRADE 50W, EXCEPT GIRDER FLANGES AND WEBS SHALL MEET GRADE 50W-T2.

PROVIDE STEEL MEETING THE CHARPY V-NOTCH REQUIREMENTS FOR AASHTO ZONE 2 FOR ALL STRUCTURAL STEEL USED IN GIRDER FLANGES AND WEBS.

PROVIDE BLACK (UNCOATED) TYPE 3 (WEATHERING STEEL), 7/8" DIAMETER HIGH STRENGTH BOLTS WHICH MEET THE REQUIREMENTS OF SECTION 709.24, UNLESS OTHERWISE NOTED ON THE CONTRACT DRAWINGS.

PROVIDE BOLT HOLE DIAMETERS 1/16" LARGER THAN NOMINAL DIAMETER OF HIGH STRENGTH FASTENERS.

REMOVE ALL LOOSE AND NON-ADHERENT RUST THAT MAY HAVE FORMED ON THE CONNECTION AREAS BY HAND OR POWER WIRE BRUSHING BEFORE ASSEMBLING THE HIGH STRENGTH BOLTED CONNECTIONS.

BOLTED CONNECTIONS ARE DESIGNED AS SLIP-CRITICAL JOINTS WITH ALL FAYING SURFACES HAVING A CLASS B SLIP COEFFICIENT. EXCLUDE BOLT THREADS FROM THE SHEAR PLANES.

DETAIL THE BEARING STIFFENERS AND GIRDER ENDS SUCH THAT THEY ARE PLUMB AFTER DEAD LOAD DEFLECTION OF THE STRUCTURE.

CAMBER ORDINATES, AS SHOWN ON THE PLANS, ARE COMPUTED TO COMPENSATE FOR ALL DEAD LOAD DEFLECTIONS, EXCLUDING FUTURE WEARING SURFACE, AND FOR THE CURVATURE OF THE FINISHED GRADE PROFILE. DETAIL DIAPHRAGM MEMBERS TO FIT THE CAMBERED (NO LOAD) POSITION OF THE GIRDERS.

DO NOT EXCEED THE MAXIMUM ALLOWABLE JACKING LOAD. THE MAXIMUM ALLOWABLE JACKING LOAD, APPLIED AT JACKING LOCATIONS, IS 111 KIPS AT THE ABUTMENTS (WORKING STRESS). JACKING POINTS HAVE BEEN DESIGNED TO TAKE FULL DEAD LOAD PLUS THE LIVE LOAD.

BLAST CLEANING AND PAINTING

UPON THE COMPLETION OF ALL FABRICATION OPERATIONS IN THE SHOP, AND BEFORE SHIPMENT TO PROJECT SITE, ALL WEATHERING STEEL BRIDGE COMPONENTS SHALL BE BLAST CLEANED TO A NEAR WHITE SURFACE CONDITION ACCORDING TO SSPC-SP 10. PRIOR TO THE START OF ANY BLAST CLEANING, ALL OIL, GREASE, CUTTING FLUIDS, OR OTHER FOREIGN MATTER SHALL BE REMOVED FROM THE SURFACES OF THE STEEL BY SOLVENT CLEANING ACCORDING TO SSPC-SP 1.

THE MEMBERS OR PORTIONS OF MEMBERS LISTED BELOW SHALL BE BLAST CLEANED AND SHOP PAINTED ACCORDING TO SECTION 688, USING THE ZINC RICH, LOW VOC SYSTEM, SECTION 711.22. APPLY THE FULL PAINT SYSTEM IN THE FABRICATION SHOP, EXCEPT FOR FAYING SURFACES OF HIGH STRENGTH BOLTED CONNECTIONS WHICH SHALL BE SHOP PAINTED WITH PRIMER ONLY, THE COLOR OF THE FINAL TOP COAT SHALL BE 30045 ACCORDING TO FEDERAL STANDARD 595 AND THE GLOSS AT AN ANGLE OF 60 DEGREES SHALL NOT EXCEED 25. PAINT THE ENDS OF THE GIRDERS AT THE ABUTMENTS AND ALL OTHER STRUCTURAL COMPONENTS ENCASED IN THE CONCRETE ABUTMENT PLUS ONE ADDITIONAL FOOT IN LENGTH.

NO.	REVISION	DATE:	BY:

W. VA. DEPARTMENT OF TRANSPORTATION
DIVISION OF HIGHWAYS

ROUTE US 48
MOOREFIELD DISTRICT
FORT RUN BRIDGE
GENERAL NOTES - I

	DATE
DESIGNED JDD	06/03
DRAWN JME	06/03
CHECKED JDD	06/03
CHECKED PCM	06/03

Baker
Michael Baker Jr., Inc. Charleston, W.Va.

SHEET S3 OF S40
BRIDGE NO. 10444

L:\proj\Corridor\...\Bridge\Fort Run\Final\Drawings\FortRun-Final-Gennotes-1.dgn

10/22/2003 09:49:05 AM

State Project No.	Federal Project No.	State Dist. No.	Fiscal Year	County	Sheet No.	Total Sheets
X316-H-100.40 06	APD 0484(251)C	5	2003	HARDY	281	670

AREAS OF THE SHOP APPLIED PAINT SYSTEM WHICH ARE DAMAGED DURING ERECTION, AND HIGH STRENGTH BOLTED CONNECTION AREAS THAT WERE ONLY PRIME PAINTED, SHALL BE PROPERLY CLEANED AND PAINTED ACCORDING TO SECTION 688, AND TO THE SATISFACTION OF THE ENGINEER.

INCLUDE CLEANING AND PAINTING COSTS IN ITEM 615001-001, STEEL SUPERSTRUCTURE.

IDENTIFICATION MARKING STEEL MEMBERS

USE METAL TAGS, SOAPSTONE, OR SOME OTHER READILY REMOVABLE MATERIAL FOR ALL STEEL MILL AND FABRICATOR IDENTIFICATION MARKINGS FOR STEEL PLATES, SHAPES AND FABRICATED MEMBERS; OR, MARK IN AN AREA OF THE COMPLETED MEMBER WHICH WILL BE COVERED WITH CONCRETE. MARKING METHODS AND LOCATIONS ARE SUBJECT TO APPROVAL OF THE ENGINEER.

DO NOT USE PAINT OR WAX-BASED CRAYONS FOR MARKING.

HANDLING AND STORING STEEL MEMBERS

STEEL MEMBERS MUST NOT BE GOUGED, SCRATCHED, DENTED OR ALLOWED TO RUB AGAINST OTHER MEMBERS WHICH WOULD RESULT IN DAMAGE TO THE BLAST CLEANED PROFILE OF THE STEEL. MEMBERS SHALL BE HANDLED USING SOFTENERS AND SLINGS INSTEAD OF CHOKERS AND CHAINS.

STORE MEMBERS IN THE FABRICATION SHOP AND AT THE PROJECT SITE IN SUCH A MANNER AS TO BE KEPT FREE AND CLEAN OF ALL FOREIGN SUBSTANCES SUCH AS GREASE, OIL, MORTAR AND CONCRETE, SPLATTER, CHALK AND CRAYON MARKS, PAINT, AND DIRT. ALL STORAGE MUST BE ABOVE GROUND AND SLOPED TO ALLOW FREE DRAINAGE OF MELTED SNOW, RAINWATER AND DEW.

IF STORED FOR PERIODS LONGER THAN 3 MONTHS, THE MEMBERS MUST BE PLACED ON METAL SUPPORTS. FOR PERIODS OF STORAGE UP TO 3 MONTHS, MEMBERS MAY BE PLACED ON CLEAN, UNTREATED, WOOD TIMBERS.

STORE PLATE GIRDERS AND ROLLED BEAMS WITH THE WEB IN THE UPRIGHT POSITION. THE MEMBERS MAY BE STACKED, PROVIDED METAL OR WOOD SUPPORTS ARE USED, AS NOTED ABOVE.

ALUMINUM RAILING

ALUMINUM RAILING, POSTS AND BASE PLATES SHALL HAVE ANODIZED COLORING TO MATCH WEATHERING STEEL COLOR.

FINAL CLEANUP OF STRUCTURAL STEEL SURFACES

UPON COMPLETION OF ALL CONCRETE CURING OPERATIONS, THE CONTRACTOR SHALL CLEAN ALL STEEL SURFACES TO REMOVE ALL GREASE, OIL, CONCRETE RESIDUE, DIRT, AND OTHER FOREIGN SUBSTANCES TO THE SATISFACTION OF THE ENGINEER.

CLEANING SHALL BE PERFORMED BY ONE OR MORE OF THE FOLLOWING METHODS: HIGH-PRESSURE WATER, POWER AND/OR HAND WIRE BRUSHING, AND/OR BY BRUSH-OFF BLAST CLEANING ACCORDING TO SSPC-SP 7. CLEANING SHALL BE FOLLOWED BY A CLEAN WATER RINSE TO REMOVE ALL RESIDUES OF DETERGENTS AND CLEANERS IF THEY WERE USED. ALL GREASE AND OIL SHALL BE REMOVED PRIOR TO THE CLEAN WATER RINSE BY SOLVENT CLEANING.

DO NOT USE ACIDS TO REMOVE STAINS.

INCLUDE COSTS FOR FINAL CLEANUP OF STEEL SURFACES IN ITEM 615001-001, STEEL SUPERSTRUCTURE.

WELDING

ALL WELDING, FABRICATION AND NON-DESTRUCTIVE TESTING SHALL CONFORM TO THE ANSI/AASHTO/AWS BRIDGE WELDING CODE, (D1.5M/D1.5:2002), EXCEPT AS MODIFIED BY THE STANDARD SPECIFICATIONS.

GRIND ALL CJP WELDS FLUSH ON WEB AND FLANGES.

DO NOT USE THE ELECTROSLAG OR ELECTROGAS WELDING PROCESS.

DO NOT FIELD WELD ON ANY PART OF THE STRUCTURE WITHOUT PRIOR WRITTEN APPROVAL FROM THE ENGINEER, UNLESS SHOWN ON THE CONTRACT PLANS.

DO NOT WELD REINFORCEMENT BARS, DURING FABRICATION OR CONSTRUCTION.

BEARINGS

STEEL TROWEL FINISH BEARINGS SEATS ON ABUTMENTS TO TRUE PLANES AND ELEVATIONS. THE FLATNESS OF THE FINISHED SURFACE SHALL NOT VARY FROM A STRAIGHT EDGE LAID ON THE SURFACE IN ANY DIRECTION WITHIN THE LIMITS OF THE MASONRY PLATE BY MORE THAN $1/16$". GRIND SURFACES WHICH FAIL TO CONFORM TO THE REQUIRED FLATNESS UNTIL ACCEPTABLE.

INSTALL THE REINFORCED ELASTOMERIC BEARINGS AT THE AMBIENT TEMPERATURE BETWEEN 40 DEGREES AND 80 DEGREES FAHRENHEIT.

WELDED STUD SHEAR CONNECTORS

ALL WELDED STUD SHEAR CONNECTORS SHALL CONFORM TO THE REQUIREMENTS OF SECTION 615.3.3 OF THE STANDARD SPECIFICATIONS. THE CONNECTORS SHALL BE ATTACHED IN THE FIELD. NO SHOP INSTALLATION OF WELDED STUD SHEAR CONNECTORS SHALL BE PERMITTED. THE FIELD INSTALLATION OF THE CONNECTORS SHALL NOT COMMENCE PRIOR TO THE INSTALLATION OF DECK FORMS IN THE AREA SURROUNDING THE STUDS. EXTERIOR DECK OVERHANG FORMS MAY BE INSTALLED AFTER THE WELDED STUD SHEAR CONNECTORS. THE SHEAR CONNECTORS AND DECK FORMS SHALL BE INSTALLED IN A SEQUENCE THAT PERMITS WORKERS ACCESS THROUGH THE DECK AREA WITHOUT WALKING THROUGH INSTALLED CONNECTORS.

ARCHITECTURAL TREATMENT

ARCHITECTURAL TREATMENT TO COMPLY WITH THE REQUIREMENTS OF SECTION 601.8.10 OF THE STANDARD SPECIFICATIONS. NO PURCHASING OF PRODUCTION FORMLINER FOR ALL ARCHITECTURAL TREATMENT SHALL TAKE PLACE WITHOUT WRITTEN APPROVAL OF THE ENGINEER. ALL FORMLINERS SHALL BE FROM THE SAME FORMLINER MANUFACTURER AND SAMPLE PANELS SHALL BE SUBMITTED TO THE ENGINEER FOR APPROVAL AT THE SAME TIME. FOR ARCHITECTURAL TREATMENT DETAILS SEE SHEET 232A AND 232B.

EXCAVATION

PAYMENT FOR ALL EXCAVATION, WITHIN THE LIMITS SHOWN ON THE DRAWINGS, SHALL BE AS STRUCTURE EXCAVATION, ITEM 212001-000, EXCAVATE ROCK AND SHALE UNDER THESE CLASSIFICATIONS TO THE NEAT LINES OF THE FOOTINGS ONLY. NO EXCAVATION SHALL BE CLASSIFIED AS ROCK EXCAVATION OR WET EXCAVATION.

APPROACH SLABS

THE APPROACH SLABS SHALL BE IN ACCORDANCE WITH SECTION 502 EXCEPT AS NOTED.

REINFORCING STEEL BARS IN THE APPROACH SLABS SHALL BE EPOXY COATED AND SHALL BE ACCORDING TO AASHTO M31. GRADE 60

SILICONE JOINT SEALER SHALL CONFORM TO SECTION 708.4.

THE FOLLOWING APPROACH SLAB RELATED ITEMS ARE INCLUDED IN THE ROADWAY ESTIMATE OF QUANTITIES:

PAYMENT FOR CLASS B CONCRETE FOR THE APPROACH SLAB, COATED REINFORCING STEEL BARS IN THE UPPER AND LOWER MATS OF THE APPROACH SLAB, TRANSVERSE JOINT AT THE ABUTMENT AND JOINT, SEALER MATERIAL ALONG SIDES OF APPROACH SLAB AND POLYETHYLENE SHEET (DOUBLE LAYER) IS INCLUDED IN ITEM 502001-012, 12" PORTLAND CEMENT CONCRETE APPROACH SLAB.

PAYMENT FOR OPEN GRADED FREE DRAINING BASE COURSE IS INCLUDED IN ITEM 311006-001.

PAYMENT FOR ENGINEERING FABRIC UNDER THE AGGREGATE BASE COURSE, CLASS I, BENEATH THE APPROACH SLAB IS INCLUDED IN ITEM 207034-000, FABRIC FOR SEPARATION.

PAYMENT FOR BITUMINOUS MATERIAL BETWEEN THE TOP OF THE CONCRETE APPROACH SLAB AND THE BOTTOM OF THE SUPERPAVE HOT MIX ASPHALT SKID RESISTANT PAVEMENT SHALL BE PAID FOR UNDER ITEM 408002-001 BITUMINOUS MATERIAL.

PAYMENT FOR SUPERPAVE HOT MIX ASPHALT SKID RESISTANT PAVEMENT IS INCLUDED IN ITEM 402001, SUPERPAVE HOT MIX ASPHALT SKID RESISTANT PAVEMENT.

MEDIAN BARRIER AND PARAPET CONCRETE AND REINFORCING ON TOP OF THE APPROACH SLABS ARE INCLUDED IN THE BRIDGE SUPERSTRUCTURE QUANTITIES.

BRIDGE PLATE

INSTALL A NEW BRIDGE PLATE ON THE ROADWAY FACE OF THE RIGHT PARAPET AT ABUTMENT 1 AS DIRECTED BY THE ENGINEER.

JOINT FILLER

PREFORMED JOINT FILLER SHALL BE SPONGE RUBBER, TYPE 1, CONFORMING TO SECTION 708.1.1. THERE IS NO SEPARATE PAYMENT FOR PREFORMED JOINT FILLER AND ALL COSTS SHALL BE INCLUDED IN THE BID PRICE FOR THE VARIOUS ITEMS THAT THE MATERIAL IS USED IN.

SEMI INTEGRAL ABUTMENTS

FOR SEMI-INTEGRAL ABUTMENT STRUCTURES, THE CREVICES BETWEEN THE EMBEDDED STEEL AND THE CONCRETE SHALL BE SUITABLY CHAMFERED TO PROVIDE FOR PLACEMENT OF A SEALANT. SEAL THE CREVICE WITH A SEALANT MATERIAL MEETING THE REQUIREMENTS OF ASTM C920/C920M, TYPE S, GRADE NS, CLASS 25, USES NT AND M. SEALANT SHALL BE SUITABLE FOR BONDING BETWEEN CONCRETE AND THE TOP COAT OF THE SPECIFIED PAINT SYSTEM. ACID-CURE SEALANTS ARE NOT ALLOWED. INCLUDE PAYMENT IN ITEM 615001-001, STEEL SUPERSTRUCTURE.

STAY IN PLACE DECK FORM AREA

AREA = 6550 SF

SUB SURFACE INVESTIGATION

THE GEOTECHNICAL AND FOUNDATION DESIGNS ARE BASED ON BORINGS DRILLED AND THE SUBSURFACE INVESTIGATION REPORT PREPARED BY HC NUTTING CO. THIS REPORT INCLUDES THE ENGINEERING LOGS AS COMPILED BY FIELD DATA. THE FIELD LOGS AND REPORT ARE AVAILABLE FOR REVIEW DURING NORMAL BUSINESS HOURS AT HC NUTTING CO, 912 MORRIS STREET, CHARLESTON, WV 25301 (304) 344-0821.

EACH BIDDER IS RESPONSIBLE FOR REVIEWING THESE MATERIALS, AND IS PRESUMED TO HAVE CONSIDERED THESE MATERIALS IN THEIR BID PREPARATION.

DRILLED CAISSONS

THE INSTALLATION OF THE DRILLED CAISSON FOUNDATIONS SHALL BE IN ACCORDANCE WITH THE REQUIREMENTS OF SECTION 625.

THE LENGTH OF THE DRILLED CAISSONS IS BASED ON THE COMBINATION OF THE END BEARING AND THE FRICTIONAL RESISTANCE OF THE ROCK SOCKET, AND IS THE MINIMUM LENGTH REQUIRED.

ALL DRILLED SHAFTS SHALL HAVE A FLAT BOTTOM AS DEFINED IN SECTION 625.3.3 OF THE STANDARD SPECIFICATIONS. THE CONTRACTOR SHALL CLEAN THE ROCK SOCKET SO THAT A MINIMUM OF 50% OF THE BASE WILL HAVE LESS THAN $1/2$ INCH OF SEDIMENT AT THE TIME OF PLACEMENT OF THE CONCRETE. SEDIMENT DEPTH AT ANY LOCATION SHALL NOT EXCEED 1.5 INCHES. THE ENGINEER WILL DETERMINE SHAFT CLEANLINESS BY USING A MINI-SID DEVICE. A MAXIMUM TIME OF 2 HOURS SHOULD BE ALLOTTED BETWEEN THE TIME THE MINI-SID DEVICE IS WITHDRAWN AND THE SHAFT CONCRETE IS PLACED. BASED ON OBSERVATIONS MADE DURING EXCAVATION OF THE TEST SHAFT, IT WILL LIKELY BE NECESSARY TO USE A SUBMERSIBLE PUMP OR AIR-LIFT TO ACHIEVE THE REQUIRED BOTTOM CLEANLINESS.

THE CONTRACTOR SHALL FURNISH A DRILLED CAISSON/ROCK SOCKET INSPECTION CAMERA MEETING THE FOLLOWING REQUIREMENTS AND SUBJECT TO THE APPROVAL OF THE ENGINEER.

COLOR CAMERA WITH REMOTE MONITOR DISPLAY.
WATERPROOF, LOW LIGHT, REMOTE CONTROL, PAN HEAD.
ALL REQUIRED CONNECTORS AND/OR INTERFACES TO ALLOW VIDEO RECORDING.
ABILITY TO VIEW ENTIRE DEPTH OF ALL DRILLED CAISSONS AND ROCK SOCKETS.

THE CAMERA SHALL BE AVAILABLE TO THE ENGINEER AT ALL TIMES DURING DRILLED CAISSON AND ROCK SOCKET CONSTRUCTION. COST OF THE INSPECTION CAMERA AND NECESSARY ACCESSORIES SHALL BE INCIDENTAL TO THE DRILLED CAISSON AND ROCK SOCKET UNIT BID ITEMS.

SHOP DRAWINGS

ALL SHOP DRAWINGS WILL BE SUBJECT TO THE REQUIREMENTS OF SECTION 105.2. SUBMIT SHOP DRAWINGS TO:

MICHAEL BAKER JR., INC
5088 WEST WASHINGTON STREET
CHARLESTON, WV 25313

THE DESIGN CALCULATIONS AND PLANS FOR ANY PROPOSED FALSEWORK, COFFERDAMS, SHEETING, OR OTHER TEMPORARY SUPPORTS OR BRACING REQUIRED TO CONSTRUCT THE STRUCTURE SHALL BE SIGNED AND SEALED BY A PROFESSIONAL ENGINEER REGISTERED IN THE STATE OF WEST VIRGINIA, BEFORE BEING SUBMITTED TO THE ENGINEER FOR REVIEW.

PRIOR TO IMPOSING ANY CONSTRUCTION LOADS ON THE STRUCTURE, THE GENERAL CONTRACTOR SHALL SUBMIT PLANS AND SUPPORTING CALCULATIONS, SEALED BY A PROFESSIONAL ENGINEER REGISTERED IN THE STATE OF WEST VIRGINIA, DEMONSTRATING THAT SUCH LOADINGS DO NOT INTRODUCE ANY DETRIMENTAL EFFECTS INTO THE STRUCTURE.

SPECIAL PROVISIONS

STRUCTURAL CONCRETE CLASS H BRIDGE DECKS
DRILLED CAISSON FOUNDATIONS
REINFORCED NEOPRENE SHEET
ELASTOMERIC BEARING ASSEMBLIES

NO.	REVISION	DATE:	BY:

W. VA. DEPARTMENT OF TRANSPORTATION
DIVISION OF HIGHWAYS

ROUTE US 48
MOOREFIELD DISTRICT
FORT RUN BRIDGE
GENERAL NOTES – II

DESIGNED JDD	DATE 06/03
DRAWN JMC	06/03
CHECKED JDD	06/03
CHECKED PCM	06/03

Baker
Michael Baker Jr., Inc. Charleston, W.Va.

SHEET S4 OF S40
BRIDGE NO. 10444

L:\proj\Corridor H\...\Bridge\Fort Run\Final\Drawings\FortRun-Final-Gennotes-2.dgn

12:20:34 PM
03/02/...
L:\PROJ\Corridor...ct8\Bridge\Fort Run\Find\Drawings\Fort Run-Final-quantities.dgn

03/02/2004

State Project No.	Federal Project No.	State Dist. No.	Fiscal Year	County	Sheet No.	Total Sheets
X316-H-100.40 06	APD 0484(251)C	5	2003	HARDY	282	670

SUMMARY OF ESTIMATED BRIDGE QUANTITIES

ITEM NUMBER	ITEM DESCRIPTION	UNITS	ABUT 1	ABUT 2	SUPERSTR	TOTAL
212001-000	STRUCTURE EXCAVATION	CY	132	54	-	186
212005-000	SELECT MATERIAL FOR BACKFILLING	CY	45	46	-	91
601002-001	CLASS B CONCRETE	CY	72	73	-	145
601009-001	CLASS H CONCRETE	CY	-	-	329	329
601009-003	CLASS H CONCRETE, ARCHITECTURAL	CY	-	-	25	25
601014-001	TEST SLAB	LS	-	-	1	1
602001-001	REINFORCING STEEL BAR	LB	13504	13552	-	27056
602002-001	EPOXY COATED REINFORCING STEEL BAR	LB	-	-	58931	58931
615001-001	STEEL SUPERSTRUCTURE	LS	-	-	1	1
615029-001	NON-GUIDED BEARINGS	EA	10	10	-	20
617003-001	ALUMINUM RAILING, ANODIZED	LF	-	-	276	276
625001-012	36 INCH DIAMETER DRILLED CAISSONS	LF	64	83	-	147
625003-010	30 INCH ROCK SOCKET FOUNDATION	LF	72	92	-	164
625004-012	36 INCH DRILLED CAISSON TEST HOLE	LS	1	-	-	1
639001-001	CONSTRUCTION LAYOUT STAKES	LS	-	-	1	1
662002-001	GALVANIZED STEEL CONDUIT	LS	-	-	1	1

ITEM NO 615001-001, STEEL SUPERSTRUCTURE INCLUDES:

DESCRIPTION	UNITS	QUANTITY
STRUCTURAL STEEL, AASHTO M270, GRADE 50W	LB	238780
STUD SHEAR CONNECTORS (7/8 INCH DIA X 6 INCH)	EA	5070
7/8" Ø HIGH STRENGTH BOLTS	EA	360

ITEM 602002-001 REINFORCING STEEL BAR (LB)

SIZE	ABUT 1	ABUT 2	SUPERSTR	TOTAL
4	305	311	-	338
5	5493	5531	-	11024
6	-	-	-	-
7	-	-	-	-
8	-	-	-	-
9	693	697	-	1390
10	-	-	-	-
11	7013	7013	-	14026
TOTAL	13504	13552	-	27056

ITEM 602002-001 EPOXY-COATED REINFORCING STEEL BAR (LB)

SIZE	ABUT 1	ABUT 2	SUPERSTR	TOTAL
3	-	-	526	526
4	-	-	23135	23135
5	-	-	32814	32814
6	-	-	2456	2456
8	-	-	-	-
9	-	-	-	-
10	-	-	-	-
TOTAL	-	-	58931	58931

INDEX OF DRAWINGS

DWG. NO.	DESCRIPTION
S1	GENERAL PLAN
S2	ELEVATION VIEW
S3	GENERAL NOTES - I
S4	GENERAL NOTES - II
S5	SUMMARY OF BRIDGE QUANTITIES AND INDEX OF DRAWINGS
S6	FOUNDATION LAYOUT
S7	DRILLED SHAFTS AT ABUTMENT 1
S8	DRILLED SHAFTS AT ABUTMENT 2
S9	DRILLED SHAFT REINFORCING SCHEDULE
S10	ABUTMENT 1
S11	ABUTMENT 2
S12	ABUTMENT 1 AND 2 REINFORCING SCHEDULE
S13	WING WALL DETAILS ABUTMENT 1
S14	WING WALL DETAILS ABUTMENT 2
S15	WINGWALL REINFORCING SCHEDULE
S16	BEARING DETAILS
S17	FRAMING PLAN
S18	GIRDER ELEVATION AND DETAILS
S19	CAMBER AND MISCELLANEOUS STEEL DETAILS
S20	DECK SLAB PLAN
S21	TYPICAL SECTION
S22	DECK SLAB DETAILS
S23	TOP OF DECK ELEVATIONS
S24	DECK SLAB REINFORCING SCHEDULE
S25	RAILING DETAILS
S26	APPROACH SLAB PLAN
S27	APPROACH SLAB DETAILS
S28	BARRIER DETAILS ON APPROACH SLAB
S29	TERMINAL WALL DETAILS
S30	SITUATION PLAN
S31	LOAD RATING
S32	TEST BORING DETAILS SHEET 1 OF 2
S33	TEST BORING DETAILS SHEET 2 OF 2
S34	CORE BORING LOGS SHEET 1 OF 7
S35	CORE BORING LOGS SHEET 2 OF 7
S36	CORE BORING LOGS SHEET 3 OF 7
S37	CORE BORING LOGS SHEET 4 OF 7
S38	CORE BORING LOGS SHEET 5 OF 7
S39	CORE BORING LOGS SHEET 6 OF 7
S40	CORE BORING LOGS SHEET 7 OF 7

NO.	REVISION	DATE:	BY:

W. VA. DEPARTMENT OF TRANSPORTATION
DIVISION OF HIGHWAYS

ROUTE US 48
MOOREFIELD DISTRICT
FORT RUN BRIDGE
SUMMARY OF BRIDGE QUANTITIES
AND INDEX OF DRAWINGS

	DESIGNED	DRAWN	CHECKED	CHECKED
	JSD	JME	PCM	AJS
DATE	06/03	06/03	06/03	06/03

Baker
Michael Baker Jr., Inc. Charleston, W.Va.

SHEET S5 OF S40
BRIDGE NO. 10444

State Project No.	Federal Project No.	State Dist. No.	Fiscal Year	County	Sheet No.	Total Sheets
X316-H-100.40 06	APD 0484(251)C	5	2003	HARDY	283	670

10/22/2003

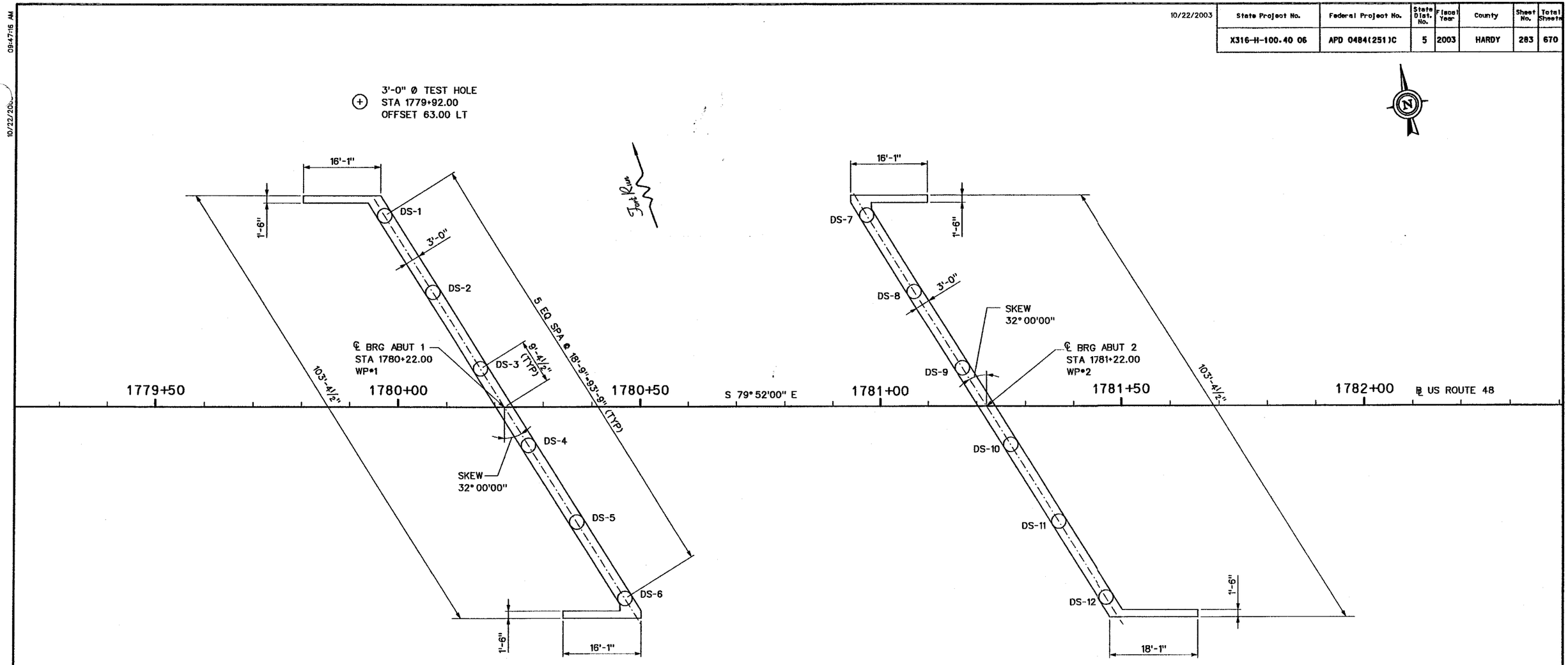

FOUNDATION LAYOUT PLAN

CURVE H6-9

PI = 1799+07.00
PIc = 1798+18.25
Δ = 70° 08' 00" (LT)
Δc = 57° 31' 42" (LT)
D = 2° 51' 53"
R = 2,000.00
L = 2,008.12
T = 1,097.88
SE = 0.074

COORDINATES (FT)		
	NORTHING	EASTING
WP1	210,479.0058	2,127,668.3096
WP2	210,461.4119	2,127,766.7497

LEGEND

DS - DRILLED SHAFT

SCALE : 0 10 ft.

NO.	REVISION	DATE:	BY:

W. VA. DEPARTMENT OF TRANSPORTATION
DIVISION OF HIGHWAYS

ROUTE US 48
MOOREFIELD DISTRICT
FORT RUN BRIDGE
FOUNDATION LAYOUT

DESIGNED	JDD	06/03
DRAWN	JLH	06/03
CHECKED	PCM	06/03
CHECKED	AJT	06/03

Baker
Michael Baker Jr., Inc. Charleston, W.Va.

SHEET S6 OF S40
BRIDGE NO. 10444

L:\proj\CorridorH\S...bridge\Fort Run\Final\Drawings\FortRun-Final-foundation.dgn
09:47:16 AM
10/22/200...

10/22/2003

State Project No.	Federal Project No.	State Dist. No.	Fiscal Year	County	Sheet No.	Total Sheets
X316-H-100.40 06	APD 0484(251)C	5	2003	HARDY	284	670

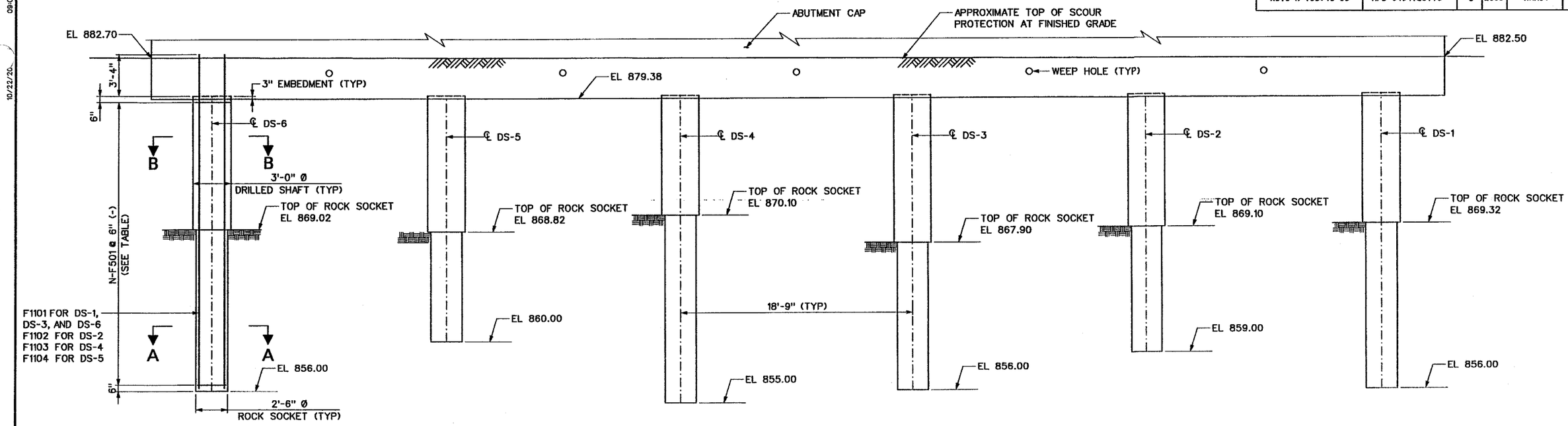

DRILLED SHAFT ELEVATION AT ABUTMENT 1

(LOOKING STATIONS BACK)

2 0 2 4 FEET

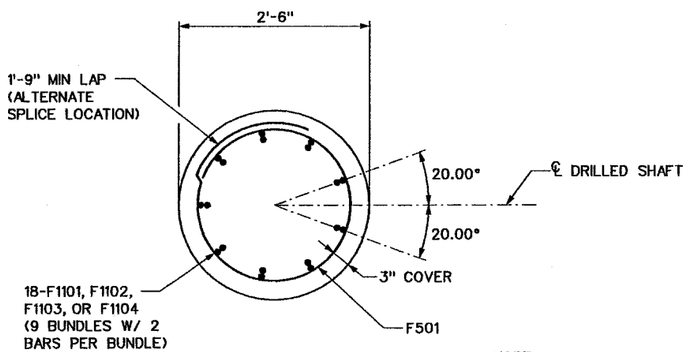

SECTION A–A

(SECTION THRU ROCK SOCKET)

6 0 6 12 INCHES

NOTE:
COARSE AGGREGATE WITH A MAXIMUM SIZE OF 1" SHALL BE USED IN THE CONCRETE MIX FOR THE DRILLED SHAFTS AND ROCK SOCKETS

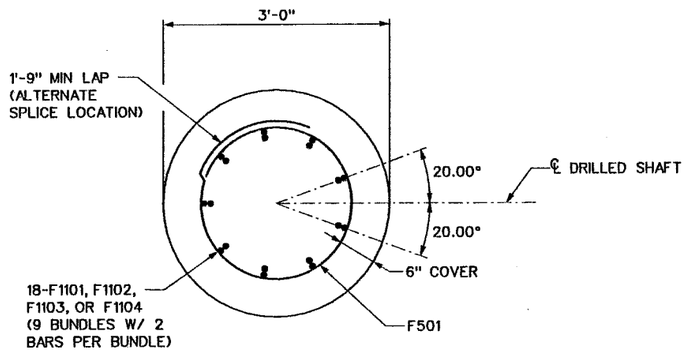

SECTION B–B

(SECTION THRU DRILLED SHAFT)

6 0 6 12 INCHES

SHAFT	N
DS-1	47
DS-2	41
DS-3	47
DS-4	49
DS-5	39
DS-6	47

N - # OF TIES
FOR INFORMATION ONLY

NOTES:

1. FOR PLAN VIEW SEE SHEET S6.

2. THE CONTRACTOR SHALL INSTALL CASING THRU THE OVERBURDEN ABOVE THE TOP OF THE ROCK SOCKET PRIOR TO THE PLACEMENT OF ANY CONCRETE INTO THE DRILLED SHAFT. THIS TEMPORARY CASING SHALL BE USED ON EVERY DRILLED SHAFT TO HINDER THE ENTRY OF GROUND WATER, DEBRIS, OR CONTAMINATES INTO THE CONCRETE AS IT IS BEING PLACED. TEMPORARY STEEL CASINGS SHALL BE REMOVED IN ACCORDANCE WITH SECTION 625.

3. PREINSTALLATION CORE HOLE RESULTS ARE PROVIDED AS PART OF THESE CONTRACT DRAWINGS, THEREFORE, THIS ITEM OF WORK WILL NOT BE REQUIRED

4. A SINGLE 3'-0" Ø DRILLED SHAFT TEST HOLE SHALL BE DRILLED TO EL 868.40. THE TEST HOLE SHALL INCLUDE A 2'-6" Ø ROCK SOCKET DRILLED FROM EL 868.40 TO EL 860.00. CUT BARS FLUSH WITH THE TOP AND BURY 2'-0". TEST HOLE SHALL BE REINFORCED SIMILAR TO ACTUAL SHAFTS AND LOCATED AT BORING RCB1-1, +/- 1'-0". CROSSHOLE SONIC LOGGING OF THE TEST HOLE IS REQUIRED.

5. SEE SHEET S9 FOR QUANTITIES.

NO.	REVISION	DATE:	BY:

W. VA. DEPARTMENT OF TRANSPORTATION
DIVISION OF HIGHWAYS

ROUTE US 48
MOOREFIELD DISTRICT
FORT RUN BRIDGE
DRILLED SHAFTS AT ABUTMENT 1

	DESIGNED	DRAWN	CHECKED	CHECKED
	PCM	JME	JDD	PCM
DATE	06/03	06/03	06/03	06/03

Baker
Michael Baker Jr., Inc. Charleston, W.Va.

SHEET S7 OF S40
BRIDGE NO. 10444

L:\proj\Corridor\Structure\Bridge\Fort Run\Final\Drawings\FortRun-Final-Drilledshafts-Abut1.dgn

10/22/2003

State Project No.	Federal Project No.	State Dist. No.	Fiscal Year	County	Sheet No.	Total Sheets
X316-H-100.40 06	APD 0484(251)C	5	2003	HARDY	285	670

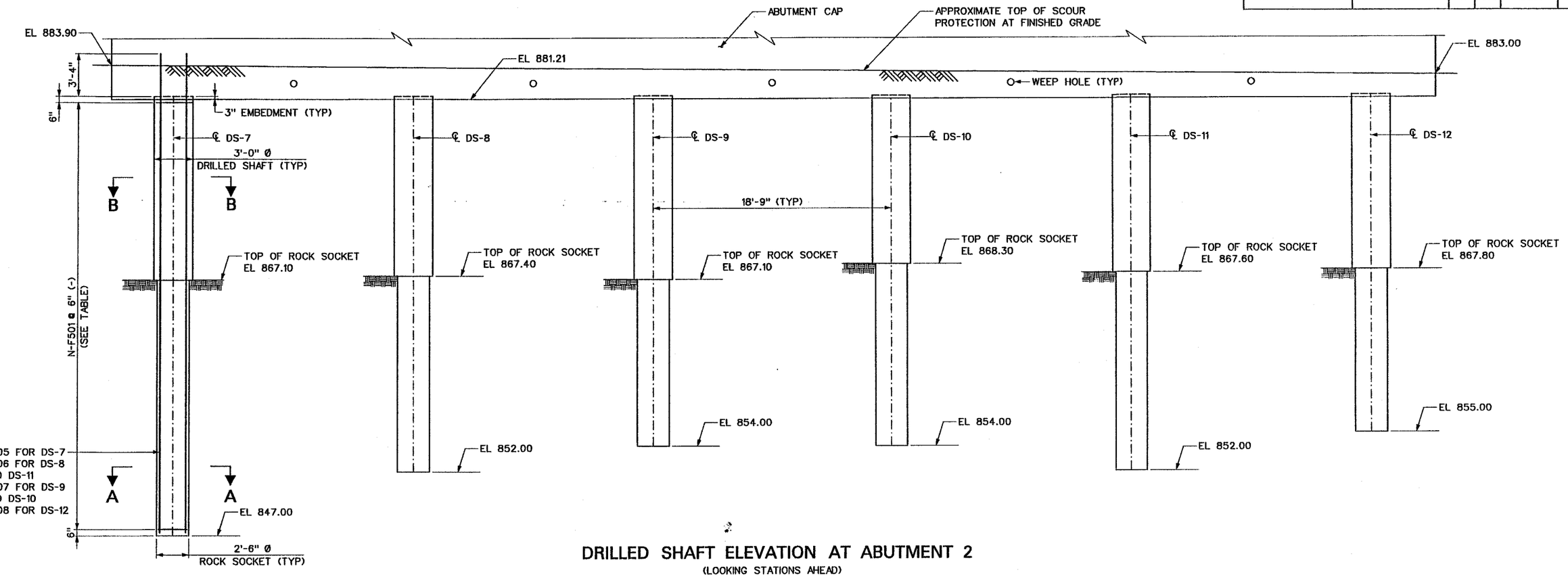

DRILLED SHAFT ELEVATION AT ABUTMENT 2

(LOOKING STATIONS AHEAD)

2 0 2 4 FEET

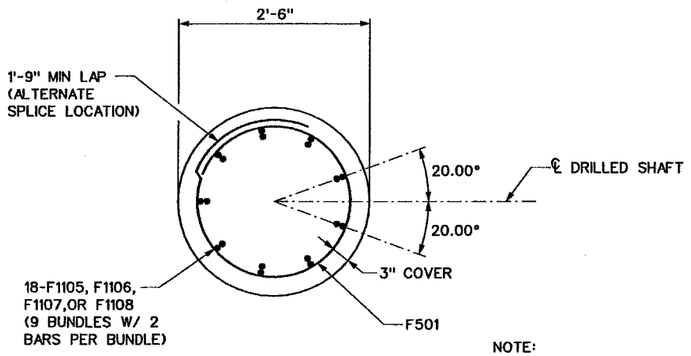

SECTION A–A

(SECTION THRU ROCK SOCKET)

6 0 6 12 INCHES

NOTE:
COARSE AGGREGATE WITH A MAXIMUM SIZE OF 1" SHALL BE USED IN THE CONCRETE MIX FOR THE DRILLED SHAFTS AND ROCK SOCKETS

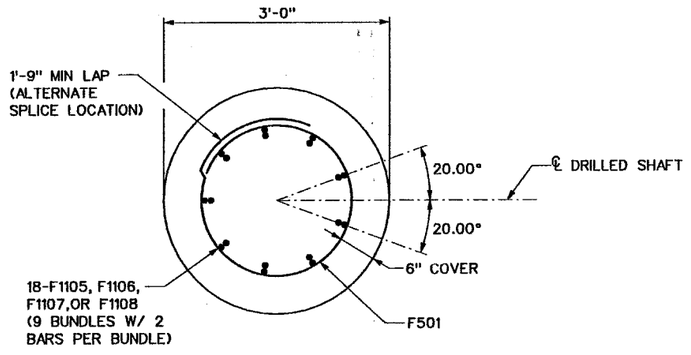

SECTION B–B

(SECTION THRU DRILLED SHAFT)

6 0 6 12 INCHES

SHAFT	N
DS-7	68
DS-8	58
DS-9	54
DS-10	54
DS-11	58
DS-12	52

N = # OF TIES
FOR INFORMATION ONLY

NOTES:

1. FOR PLAN VIEW SEE SHEET S6.

2. SEE SHEET S7 FOR ADDITIONAL DRILLED SHAFTS NOTES.

NO.	REVISION	DATE:	BY:

W. VA. DEPARTMENT OF TRANSPORTATION
DIVISION OF HIGHWAYS

ROUTE US 48
MOOREFIELD DISTRICT
FORT RUN BRIDGE
DRILLED SHAFTS AT ABUTMENT 2

DESIGNED	PCM	06/03
DRAWN	JME	06/03
CHECKED	JDD	06/03
CHECKED	PCM	06/03

Baker
Michael Baker Jr., Inc. Charleston, W.Va.

SHEET S8 OF S40
BRIDGE NO. 10444

09:06:48 AM 10/22/200...
L:\proj\Corridor\HS...Bridge\Fort Run\Final\Drawings\FortRun-Final-Drilledshafts-Abut2.dgn

DRILLED SHAFT / ROCK SOCKET DATA TABLE

DESIGN CRITERIA								
500 - YEAR SCOUR ELEVATION (FT)	100 - YEAR SCOUR ELEVATION (FT)	FACTORED AXIAL LOAD (KIPS) (1)	FACTORED BENDING MOMENT (FT-K) (1)	MAX FACTORED AXIAL LOAD (KIPS)	AXIAL CAPACITY (KIPS) (2)	BENDING MOMENT CAPACITY (FT-K) (3)	FACTORED SHEAR LOAD (KIPS) (4)	SHEAR CAPACITY (KIPS) (5)
869.90	874.10	548.3	669.9	616.0	679.0	890.0	122.0	138.5

1. CONCURRENT FACTORED LOADS CONTROLLING ROCK SOCKET DESIGN IN COMBINED COMPRESSION AND BENDING. MOMENT ACTING AT TOP OF ROCK SOCKET ABOUT AN AXIS PARALLEL TO ℄ BEARING. CONTROLLING FACTORED LOADS ARE FROM LOAD COMBINATION - STRENGTH - I.

2. GEOTECHNICAL CAPACITY OF ROCK SOCKET COMBINING END BEARING AND SIDE FRICTION. END BEARING CAPACITY = 177 KIPS, SIDE FRICTION CAPACITY = 502 KIPS; TOTAL AXIAL CAPACITY = 177 KIPS + 502 KIPS = 679 KIPS. ROCK SOCKET DEPTH WAS CONTROLLED BY FACTORED AXIAL LOADS.

3. MOMENT CAPACITY OF 2'-6" ø ROCK SOCKET FOR CONCURRENT FACTORED LOADS.

4. FACTORED SHEAR LOAD ACTING ON ROCK SOCKET.

5. SHEAR CAPACITY OF 2'-6" ø ROCK SOCKET.

TABLE OF QUANTITES

ITEM NUMBER	DESCRIPTION	UNIT	ABUTMENT 1	ABUTMENT 2
625001-012	36 INCH DIAMETER DRILLED CAISSON	LF	64	83
625003-010	30 INCH ROCK SOCKET FOUNDATION	LF	72	92
625004-012	36 INCH DRILLED CAISSON TEST HOLE	LS	1	N/A

REINFORCING BAR LIST *

MARK	TYPE	SIZE	NO. REQUIRED	LENGTH
ABUTMENT 1 - DRILLED SHAFTS/ROCK SOCKETS				
F501	BENT	5	270	8'-0⅜"
F1101	STR	11	54	26'-8½"
F1102	STR	11	18	23'-8½"
F1103	STR	11	18	27'-8½"
F1104	STR	11	18	22'-8½"
ABUTMENT 2 - DRILLED SHAFTS/ROCK SOCKETS				
F501	BENT	5	344	8'-0⅜"
F1105	STR	11	18	37'-6½"
F1106	STR	11	36	32'-6½"
F1107	STR	11	36	30'-6½"
F1108	STR	11	18	29'-6½"

* FOR INFORMATION ONLY - SEE NOTE

BAR BENDING DIAGRAM

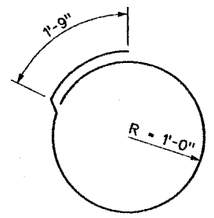

F501

NOTES:

1. THE COST OF THE REINFORCING FOR THE DRILLED SHAFTS/ ROCK SOCKETS SHALL BE INCLUDED IN PAY ITEM NO 625001-012 (36" DIAMETER DRILLED CAISSONS).

NO.	REVISION	DATE:	BY:

W. VA. DEPARTMENT OF TRANSPORTATION
DIVISION OF HIGHWAYS

ROUTE US 48
MOOREFIELD DISTRICT
FORT RUN BRIDGE
DRILLED SHAFT
REINFORCING SCHEDULE

DESIGNED	DATE
PCM	06/03
DRAWN	
JME	06/03
CHECKED	
JSD	06/03
CHECKED	
PCM	06/03

Baker
Michael Baker Jr., Inc. Charleston, W.Va.

SHEET S9 OF S40
BRIDGE NO. 10444

09:07:10 AM 10/22/200
L:\proj\Corridor H\...\Bridge\Fort Run\Final\Drawings\FortRun-Final-Drilledshafts-reinfsched.dgn

10/22/2003 08:58:47 AM

10/22/2003	State Project No.	Federal Project No.	State Dist. No.	Fiscal Year	County	Sheet No.	Total Sheets
	X316-H-100.40 06	APD 0484(251)C	5	2003	HARDY	287	670

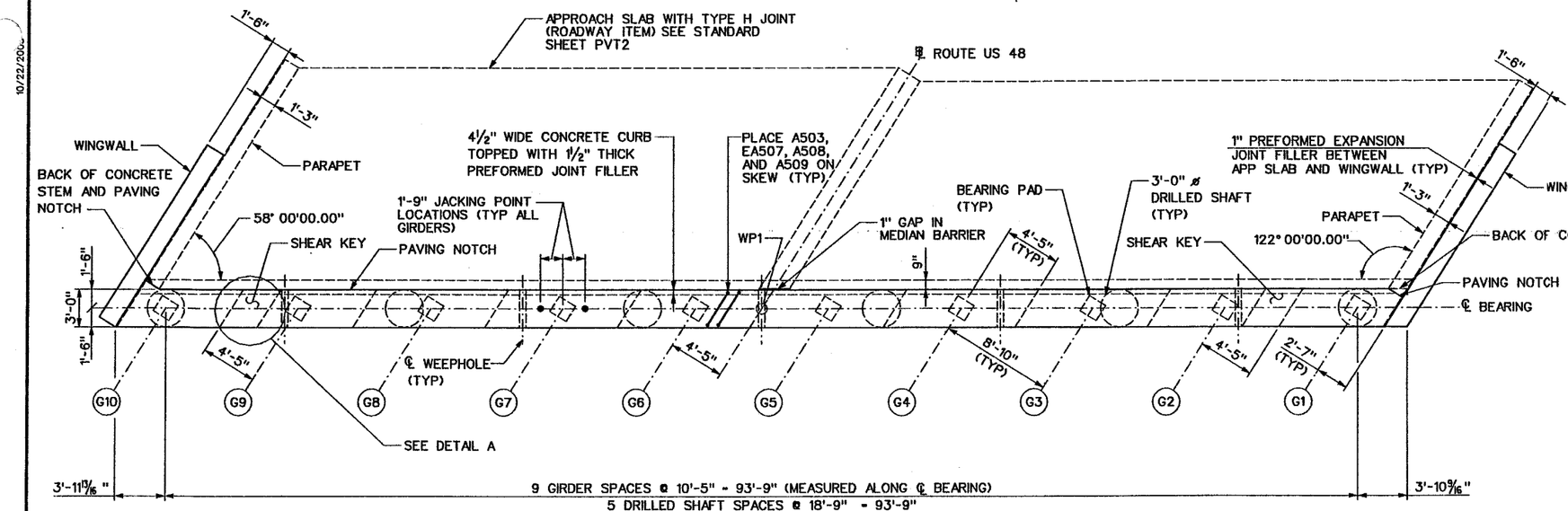

PLAN

(LOOKING STATIONS BACK)

2 0 2 4 6 FEET

NOTES:

1. REINFORCED NEOPRENE WATERPROOFING AS SHOWN IN SECTION A-A, SHEET S11 AND AS DEFINED IN THE SPECIAL PROVISION SHALL BE INCLUDED IN ITEM 601002-001, "CLASS B CONCRETE".

2. SEE SHEET S11 FOR SECTION A-A.

3. SEE SHEET S12 FOR ABUTMENT QUANTITIES.

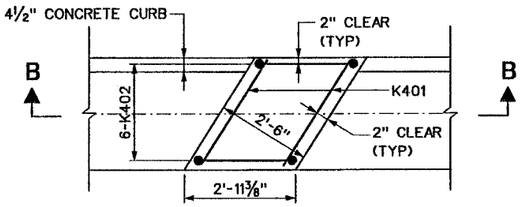

DETAIL A

(SHEAR KEY)

1 0 1 2 FEET

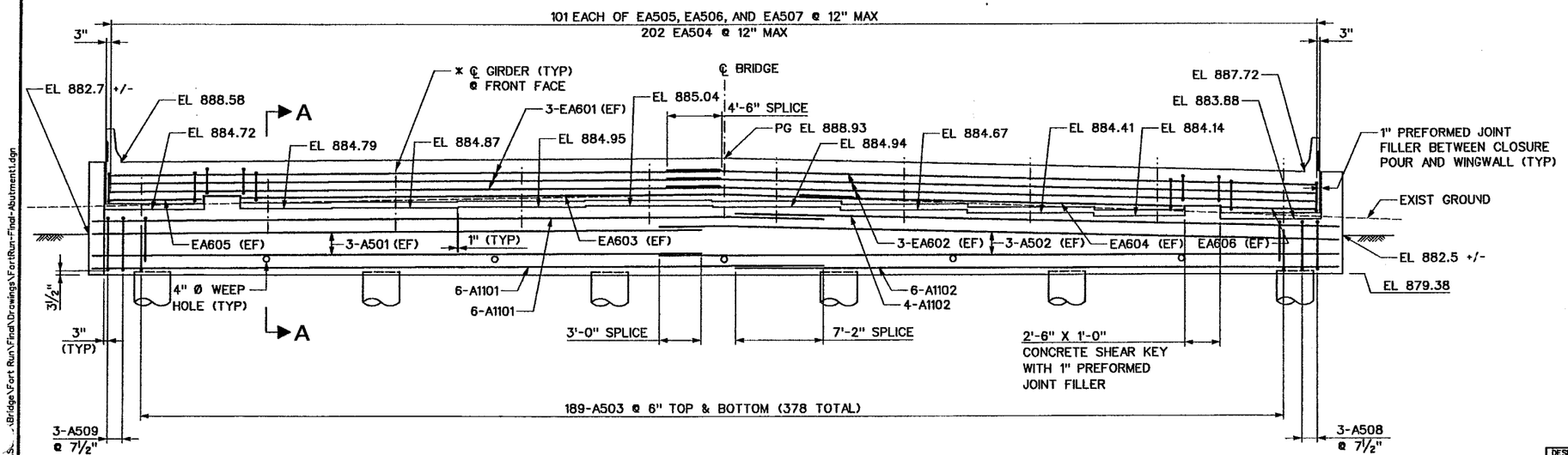

* GIRDERS AND BEARINGS NOT SHOWN FOR CLARITY.

ELEVATION

(LOOKING STATIONS BACK)

2 0 2 4 6 FEET

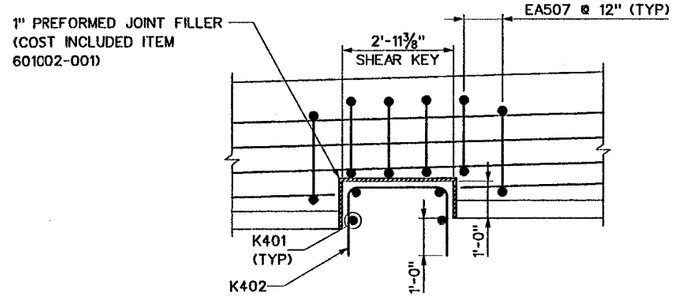

SECTION B-B

1 0 1 2 FEET

NO.	REVISION	DATE:	BY:

W. VA. DEPARTMENT OF TRANSPORTATION
DIVISION OF HIGHWAYS

ROUTE US 48
MOOREFIELD DISTRICT
FORT RUN BRIDGE
ABUTMENT 1

	DATE
DESIGNED AJT	06/03
DRAWN JLH	06/03
CHECKED PCM	06/03
CHECKED PCM	06/03

Baker
Michael Baker Jr., Inc. Charleston, W.Va.

SHEET S10 OF S40
BRIDGE NO. 10444

L:\proj\Corridor H\S...\Bridge\Fort Run\Final\Drawings\FortRun-Final-Abutment1.dgn

10/22/2003	State Project No.	Federal Project No.	State Dist. No.	Fiscal Year	County	Sheet No.	Total Sheets
	X316-H-100.40 06	APD 0484(251)C	5	2003	HARDY	288	670

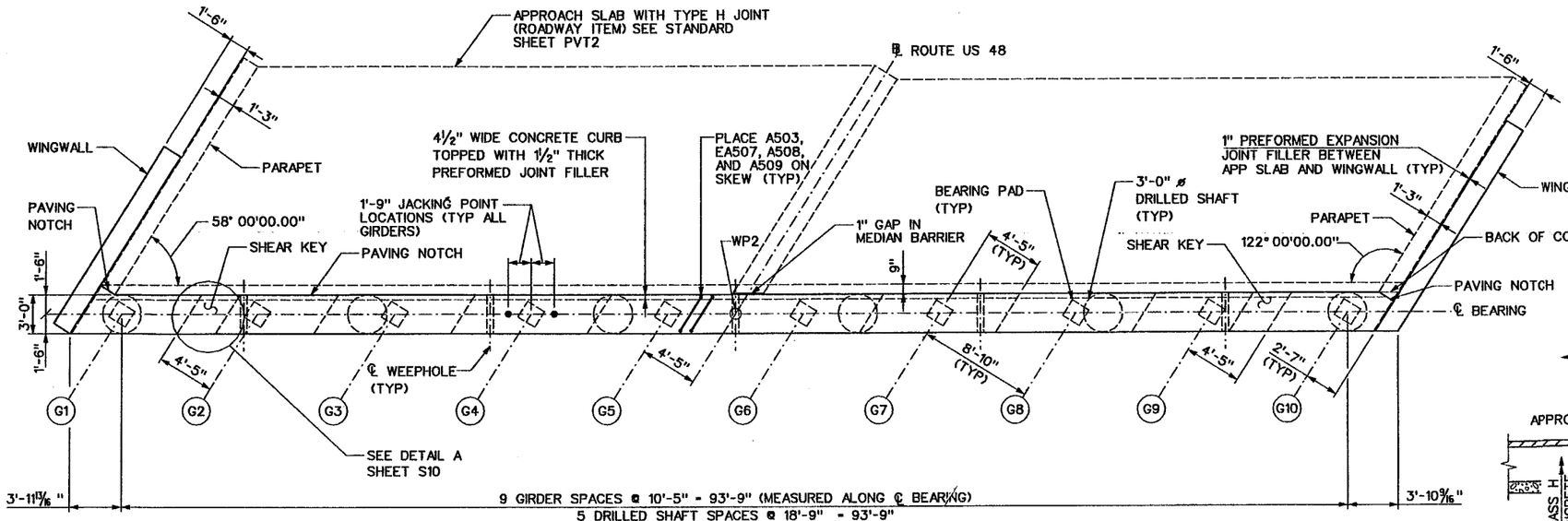

PLAN

(LOOKING STATIONS AHEAD)

2 0 2 4 6 FEET

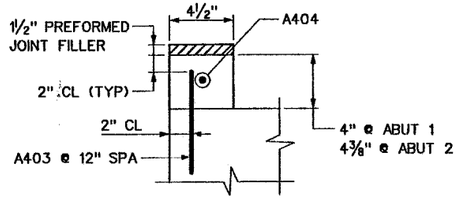

CONCRETE CURB DETAIL

NOT TO SCALE

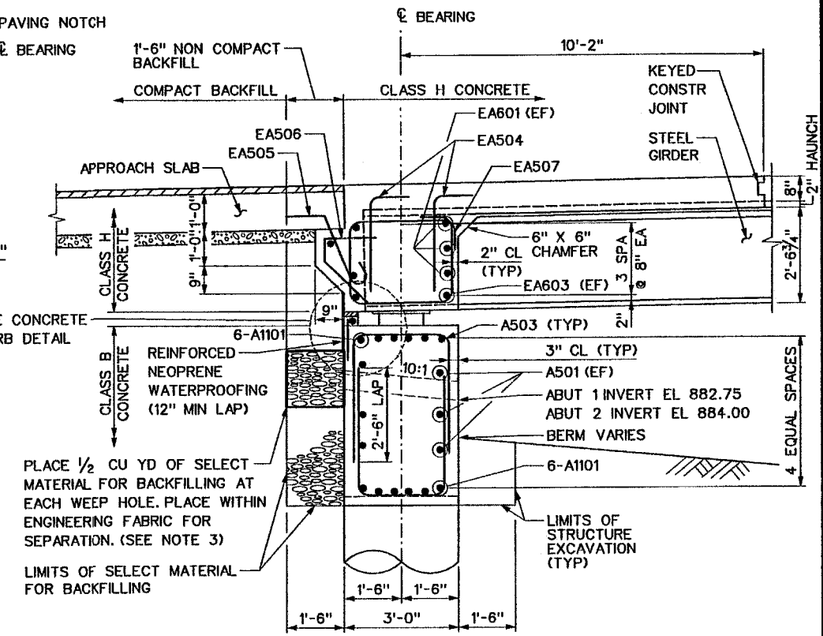

SECTION A-A

1 0 1 2 FEET

NOTES:

1. REINFORCED NEOPRENE WATERPROOFING, AS DEFINED IN THE SPECIAL PROVISION, SHALL BE INCLUDED IN ITEM 601002-001, "CLASS B CONCRETE".

2. SEE SHEET S12 FOR ABUTMENT QUANTITIES.

3. THE COST OF FABRIC FOR SEPARATION SHALL BE INCIDENTAL TO ITEM 212005-000 SELECT MATERIAL FOR BACKFILLING.

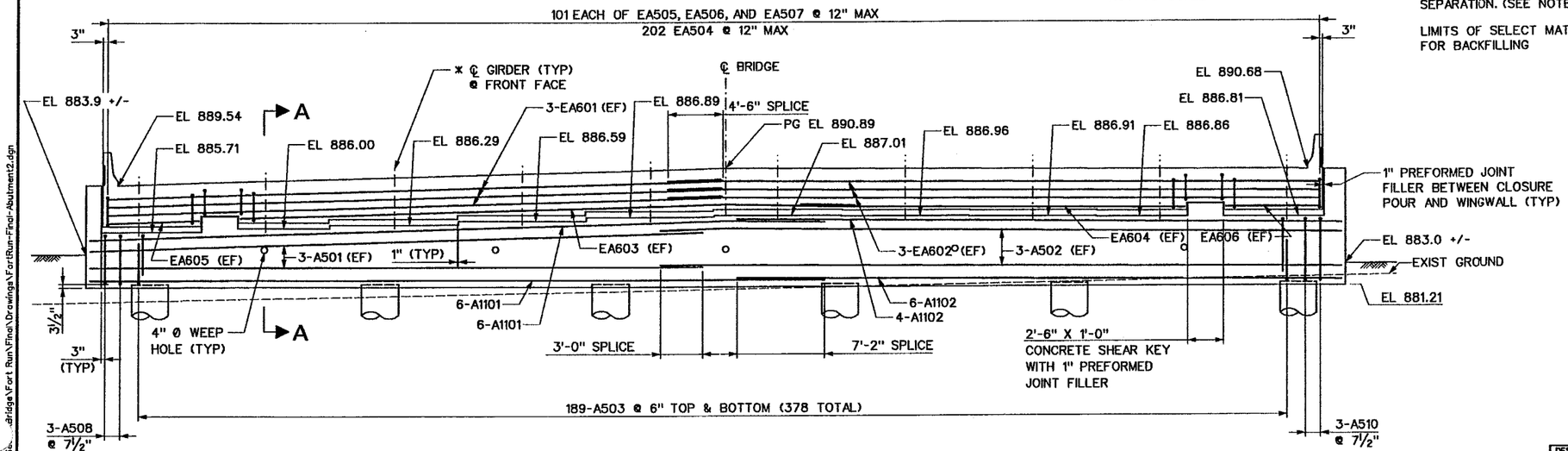

* GIRDERS AND BEARINGS NOT SHOWN FOR CLARITY.

ELEVATION

(LOOKING STATIONS AHEAD)

2 0 2 4 6 FEET

NO.	REVISION	DATE:	BY:

W. VA. DEPARTMENT OF TRANSPORTATION
DIVISION OF HIGHWAYS

ROUTE US 48
MOOREFIELD DISTRICT
FORT RUN BRIDGE
ABUTMENT 2

DESIGNED	AJT	06/03
DRAWN	JLH	06/03
CHECKED	PCM	06/03
CHECKED	PCM	06/03

Baker
Michael Baker Jr., Inc.
Charleston, W.Va.

SHEET S11 OF S40
BRIDGE NO. 10444

08:59:09 AM
10/22/200...
L:\proj\Corridor\Str...\bridge\Fort Run\Final\Drawings\FortRun-Final-Abutment2.dgn

09:55:42 AM
10/22/...

10/22/2003	State Project No.	Federal Project No.	State Dist. No.	Fiscal Year	County	Sheet No.	Total Sheets
	X316-H-100.40 06	APD 0484(251)C	5	2003	HARDY	289	670

REINFORCEMENT BAR SCHEDULE

MARK	TYPE	SIZE	NO.	LENGTH	LOCATION	A	B	C	D	E	REMARKS
ABUTMENT 1 (SHEAR KEYS, CAP & END DIAPHRAGM)											
K401	STR	4	8	3' - 1½"	ABUT 1						
K402	10	4	12	6' - 4"	ABUT 1	2' - 7"	1' - 10½"	1' - 10½"			
A403	STR	4	101	12"	ABUT 1/CURB						DOWELL INTO ABUTMENT STEM FROM CURB
A404	STR	4	3	36' - 0"	CURB						LAP 3'-0"
A501	STR	5	6	50' - 0"	ABUT 1						
A502	STR	5	6	55' - 10"	ABUT 1						
A503	10	5	378	10' - 4"	ABUT 1	2' - 6"	3' - 11"	3' - 11"			
EA504	1	5	202	3' - 6½"	ABUT 1	2' - 6½"	1' - 0"				
EA505	12	5	101	4' - 4"	ABUT 1	1' - 6"	2' - 2"	8"			
EA506	13	5	101	4' - 3"	ABUT 1	2' - 1"	7"	1' - 7"			
EA507	11	5	101	11'- 0"	ABUT 1	2' - 4"	2' - 8"	6"			
A508	14	5	3	13' - 11"	ABUT 1	4' - 0"	2' - 6"	5½"			
A509	14	5	3	15' - 7"	ABUT 1	4' - 10"	2' - 6"	5½"			
EA601	STR	6	6	50' - 0"	ABUT 1						
EA602	STR	6	6	53' - 8"	ABUT 1						
EA603	STR	6	2	50' - 0"	ABUT 1						
EA604	STR	6	2	31' - 7"	ABUT 1						
EA605	STR	6	2	7' - 10"	ABUT 1						
EA606	STR	6	2	7' - 10"	ABUT 1						
A1101	STR	11	12	60' - 0"	ABUT 1						
A1102	STR	11	12	50' - 0"	ABUT 1						
ABUTMENT 2 (SHEAR KEYS, CAP & END DIAPHRAGM)											
K401	STR	4	8	3' - 1½"	ABUT 2						
K402	10	4	12	6' - 4"	ABUT 2	2' - 7"	1' - 10½"	1' - 10½"			
A403	STR	4	101	12"	ABUT 2/CURB						DOWELL INTO ABUTMENT STEM FROM CURB
A404	STR	4	3	36' - 0"	CURB						LAP 3'-0"
A501	STR	5	6	50' - 0"	ABUT 2						
A502	STR	5	6	55' - 10"	ABUT 2						
A503	10	5	378	10' - 4"	ABUT 2	2' - 6"	3' - 11"	3' - 11"			
EA504	1	5	202	3' - 6½"	ABUT 2	2' - 6½"	1' - 0"				
EA505	12	5	101	4' - 4"	ABUT 2	1' - 6"	2' - 2"	8"			
EA506	13	5	101	4' - 3"	ABUT 2	2' - 1"	7"	1' - 7"			
EA507	11	5	101	11'- 0"	ABUT 2	2' - 4"	2' - 8"	6"			
A508	14	5	3	13' - 11"	ABUT 2	4' - 0"	2' - 6"	5½"			
A510	14	5	3	16'- 1"	ABUT 2	5' - 1"	2' - 6"	5½"			
EA601	STR	6	6	50' - 0"	ABUT 2						
EA602	STR	6	6	53' - 8"	ABUT 2						
EA603	STR	6	2	50' - 0"	ABUT 2						
EA604	STR	6	2	31' - 7"	ABUT 2						
EA605	STR	6	2	7' - 10"	ABUT 2						
EA606	STR	6	2	7' - 10"	ABUT 2						
A1101	STR	11	12	60' - 0"	ABUT 2						
A1102	STR	11	12	50' - 0"	ABUT 2						

NOTE: EPOXY-COATED BARS USED IN END DIAPHRAGMS AT ABUTMENTS ARE INCLUDED IN SUPERSTRUCTURE REINFORCING STEEL BAR WEIGHT.

TABLE OF QUANTITIES: ABUTMENTS 1 & 2

ITEM NUMBER	DESCRIPTION	UNIT	QUANTITY
ABUTMENT 1			
212001-000	STRUCTURE EXCAVATION	CY	132
212005-000	SELECT MATERIAL FOR BACKFILLING	CY	45
601025-001	CLASS B CONCRETE	CY	72
602001-001	REINFORCING STEEL BARS	LB	13504
ABUTMENT 2			
212001-000	STRUCTURE EXCAVATION	CY	54
212005-000	SELECT MATERIAL FOR BACKFILLING	CY	46
601025-001	CLASS B CONCRETE	CY	73
602001-001	REINFORCING STEEL BARS	LB	13552

BENDING DIAGRAM

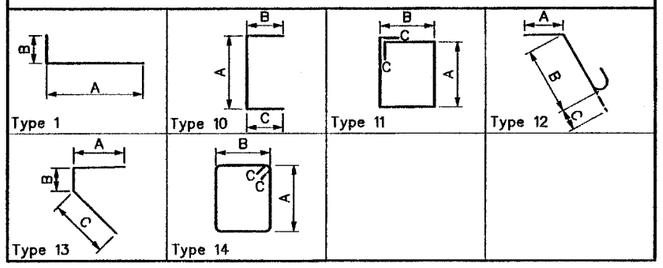

DIMENSIONS IN BENDING DIAGRAM ARE OUT-TO-OUT OF BARS.

NO.	REVISION	DATE:	BY:

W. VA. DEPARTMENT OF TRANSPORTATION
DIVISION OF HIGHWAYS

ROUTE US 48
MOOREFIELD DISTRICT
FORT RUN BRIDGE
ABUTMENT 1 & 2
REINFORCING SCHEDULE

DESIGNED	AJT	DATE	06/03
DRAWN	JLH		06/03
CHECKED	PCM		06/03
CHECKED	PCM		06/03

Baker
Michael Baker Jr., Inc. Charleston, W.Va.

SHEET S12 OF S40
BRIDGE NO. 10444

L:\proj\Corridor...t6\Bridge\Fort Run\Final\Drawings\FortRun-Final_Abutbars.dgn

State Project No.	Federal Project No.	State Dist. No.	Fiscal Year	County	Sheet No.	Total Sheets
X316-H-100.40 06	APD 0484(251)C	5	2003	HARDY	290	670

10/22/2003

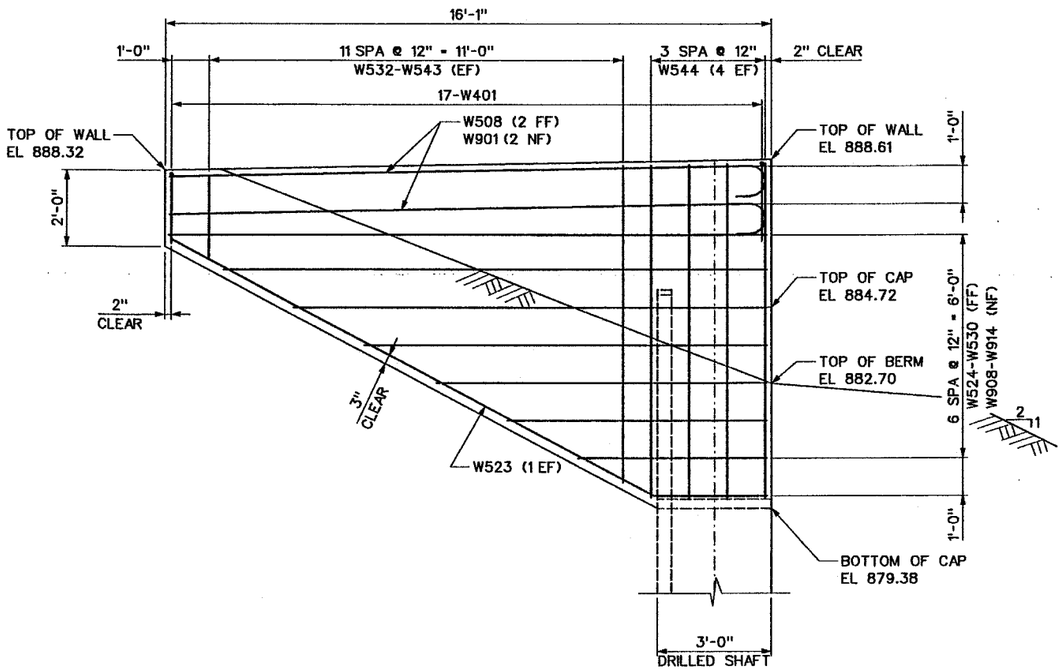

SOUTH WINGWALL ELEVATION

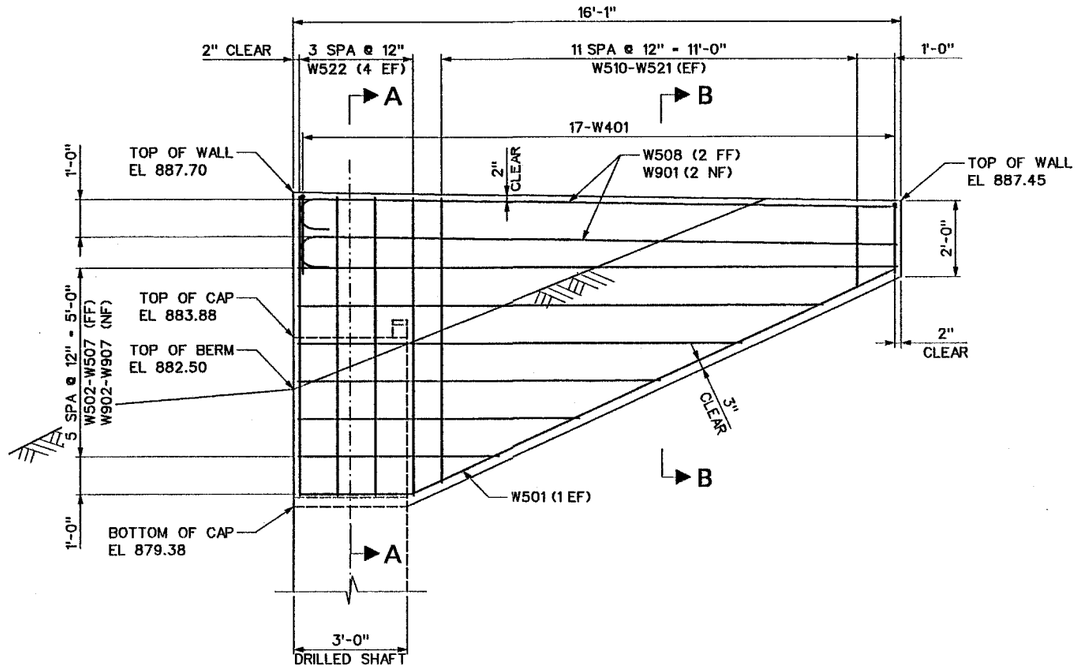

NORTH WINGWALL ELEVATION

LEGEND:

NF - NEAR FACE
FF - FAR FACE
EF - EACH FACE

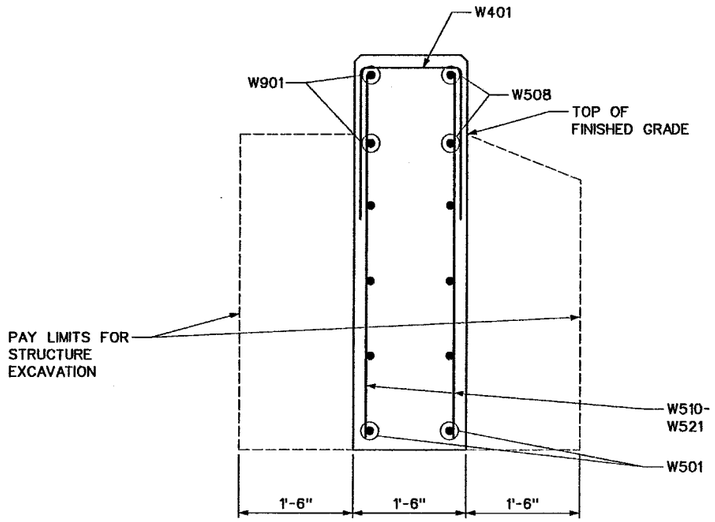

SECTION B-B

6 0 6 12 INCHES

SECTIONS FOR THE NORTH WINGWALL SHOWN.
SOUTH WINGWALL SECTIONS ARE SIMILAR.

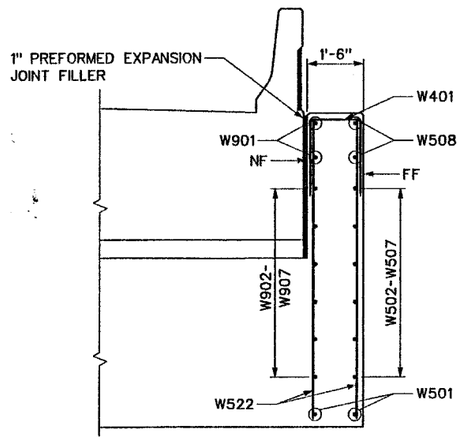

SECTION A-A

NOTES:

1. PREFORMED EXPANSION JOINT FILLER COST IS INCLUDED IN ITEM 601002-001, (CLASS B CONCRETE).

1 0 1 2 FEET

NO.	REVISION	DATE:	BY:

W. VA. DEPARTMENT OF TRANSPORTATION
DIVISION OF HIGHWAYS

ROUTE US 48
MOOREFIELD DISTRICT
FORT RUN BRIDGE
WING WALL DETAILS
ABUTMENT 1

		DATE
DESIGNED	AJT	06/03
DRAWN	JLH	06/03
CHECKED	PCM	06/03
CHECKED	JDD	06/03

Baker
Michael Baker Jr., Inc. Charleston, W.Va.

SHEET S13 OF S40
BRIDGE NO. 10444

09:54:39 AM 10/22/2003
L:\proj\CorridorH\S...\Bridge\Fort Run\Final\Drawings\FortRun-Final-Wingwall-Abut1.dgn

10/22/2003

State Project No.	Federal Project No.	State Dist. No.	Fiscal Year	County	Sheet No.	Total Sheets
X316-H-100.40 06	APD 0484(251)C	5	2003	HARDY	291	670

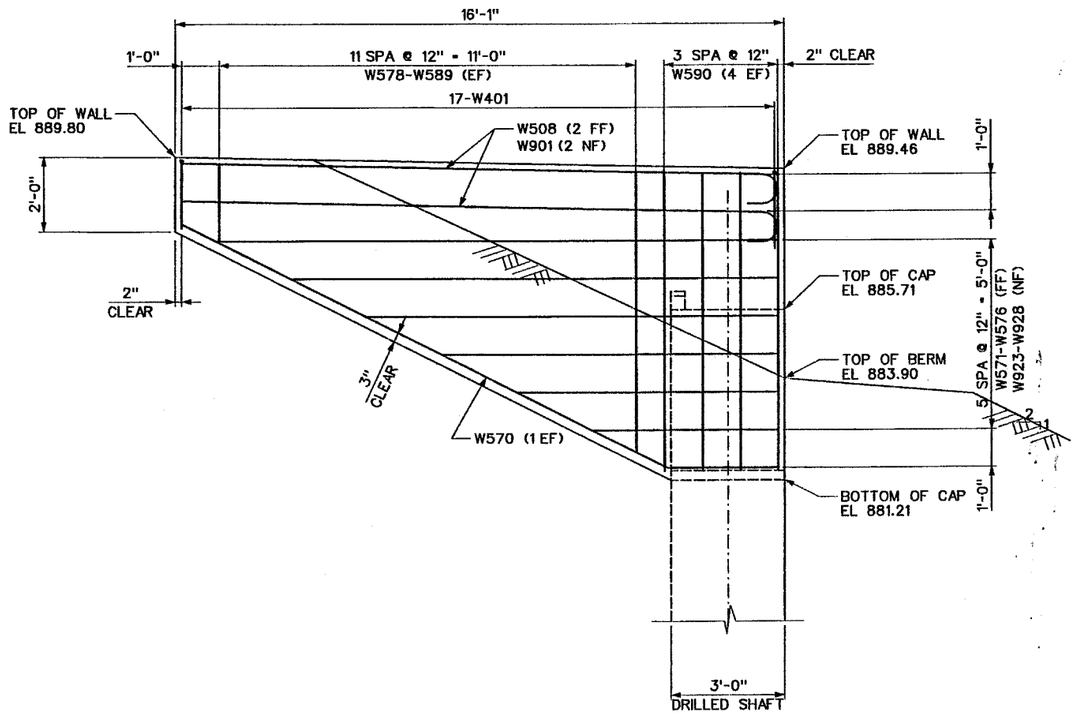

NORTH WINGWALL ELEVATION

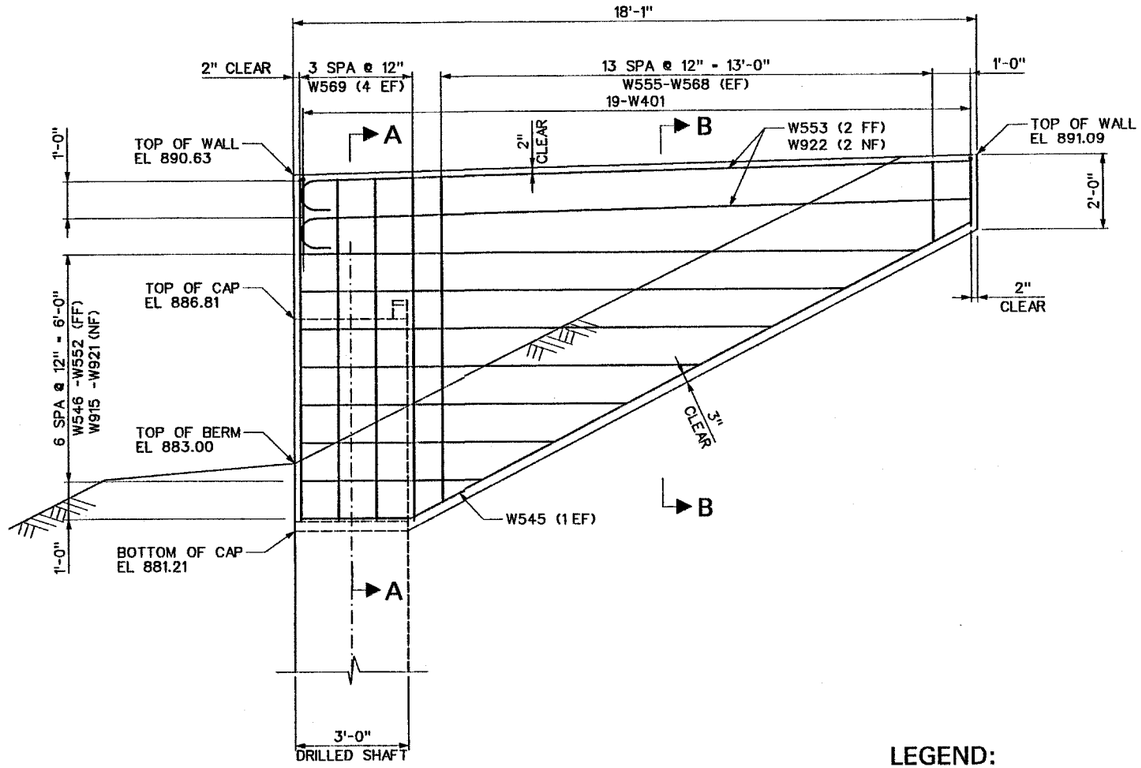

SOUTH WINGWALL ELEVATION

LEGEND:

NF - NEAR FACE
FF - FAR FACE
EF - EACH FACE

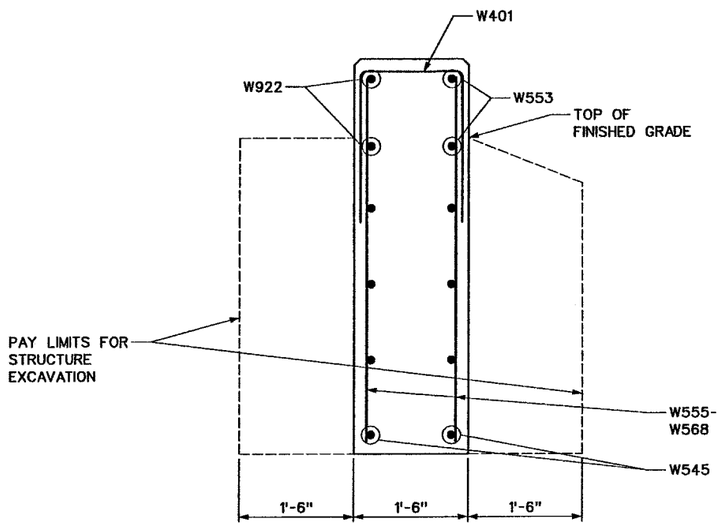

SECTION B–B

6 0 6 12 INCHES

SECTIONS FOR THE SOUTH WINGWALL SHOWN. NORTH WINGWALL SECTIONS ARE SIMILAR.

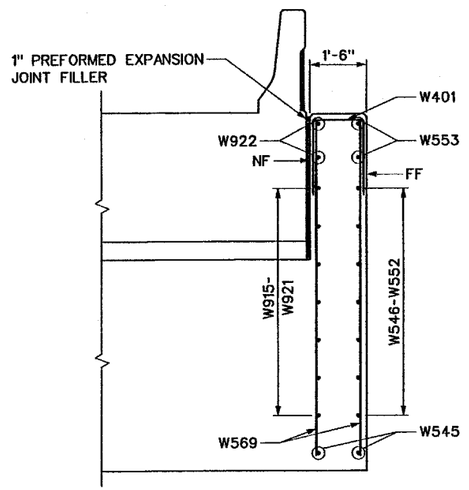

SECTION A–A

1 0 1 2 FEET

NOTES:

1. PREFORMED EXPANSION JOINT FILLER COST IS INCLUDED IN ITEM 601002-001, (CLASS B CONCRETE).

NO.	REVISION	DATE:	BY:

W. VA. DEPARTMENT OF TRANSPORTATION
DIVISION OF HIGHWAYS

ROUTE US 48
MOOREFIELD DISTRICT
FORT RUN BRIDGE
WING WALL DETAILS
ABUTMENT 2

	DESIGNED	DATE
AJT	06/03	
DRAWN	JLH	06/03
CHECKED	PCM	06/03
CHECKED	JSD	06/03

Baker
Michael Baker Jr., Inc. Charleston, W.Va.

SHEET S14 OF S40
BRIDGE NO. 10444

09:55:00 AM
10/22/20..
L:\proj\Corridor\...Bridge\Fort Run\Final\Drawings\FortRun-Final-Wingwall-Abut2.dgn

09:55:25 AM
10/22/2003
L:\pro\Corridor\...\Bridge\Fort Run\Final\Drawings\FortRun-Final-WWbars.dgn

REINFORCEMENT BAR SCHEDULE

MARK	TYPE	SIZE	NO.	LENGTH	LOCATION	A	B	C	D	G
ABUTMENT 1										
W401	10	4	34	4' - 4"	N & S WINGWALL	1' - 2"	1' - 7"	1' - 7"		
W501	2	5	2	17' - 0"	N WINGWALL	2' - 11"	14' - 1"	12' - 9½"	5' - 11"	
W502	STR	5	1	5' - 1"	N WINGWALL					
W503	STR	5	1	7' - 3"	N WINGWALL					
W504	STR	5	1	9' - 5"	N WINGWALL					
W505	STR	5	1	11' - 6½"	N WINGWALL					
W506	STR	5	1	13' - 8½"	N WINGWALL					
W507	STR	5	1	15' - 9"	N WINGWALL					
W508	9	5	4	16' - 4"	N & S WINGWALL	15' - 9"				7"
W510	STR	5	2	2' - 1"	N WINGWALL					
W511	STR	5	2	2' - 7"	N WINGWALL					
W512	STR	5	2	3' - 0½"	N WINGWALL					
W513	STR	5	2	3' - 6½"	N WINGWALL					
W514	STR	5	2	4' - 0"	N WINGWALL					
W515	STR	5	2	4' - 6"	N WINGWALL					
W516	STR	5	2	5' - 0"	N WINGWALL					
W517	STR	5	2	5' - 5½"	N WINGWALL					
W518	STR	5	2	5' - 11½"	N WINGWALL					
W519	STR	5	2	6' - 5"	N WINGWALL					
W520	STR	5	2	6' - 11"	N WINGWALL					
W521	STR	5	2	7' - 4½"	N WINGWALL					
W522	STR	5	8	7' - 10½"	N WINGWALL					
W523	2	5	2	17' - 5"	S WINGWALL	2' - 11"	14' - 6"	12' - 9½"	6' - 9½"	
W524	STR	5	1	4' - 9½"	S WINGWALL					
W525	STR	5	1	6' - 8"	S WINGWALL					
W526	STR	5	1	8' - 7"	S WINGWALL					
W527	STR	5	1	10' - 5½"	S WINGWALL					
W528	STR	5	1	12' - 4"	S WINGWALL					
W529	STR	5	1	14' - 2½"	S WINGWALL					
W530	STR	5	1	15' - 9"	S WINGWALL					
W532	STR	5	2	2' - 2"	S WINGWALL					
W533	STR	5	2	2' - 8½"	S WINGWALL					
W534	STR	5	2	3' - 3½"	S WINGWALL					
W535	STR	5	2	3' - 10"	S WINGWALL					
W536	STR	5	2	4' - 4½"	S WINGWALL					
W537	STR	5	2	4' - 11"	S WINGWALL					
W538	STR	5	2	5' - 5½"	S WINGWALL					
W539	STR	5	2	6' - 0"	S WINGWALL					
W540	STR	5	2	6' - 7"	S WINGWALL					
W541	STR	5	2	7' - 1½"	S WINGWALL					
W542	STR	5	2	7' - 8"	S WINGWALL					
W543	STR	5	2	8' - 2½"	S WINGWALL					
W544	STR	5	8	8' - 9"	S WINGWALL					
W901	9	9	4	17' - 0"	N & S WINGWALL	15' - 9"				1' - 3"
W902	STR	9	1	5' - 1"	N WINGWALL					
W903	STR	9	1	7' - 3"	N WINGWALL					
W904	STR	9	1	9' - 5"	N WINGWALL					
W905	STR	9	1	11' - 6½"	N WINGWALL					
W906	STR	9	1	13' - 8½"	N WINGWALL					
W907	STR	9	1	15' - 9"	N WINGWALL					
W908	STR	9	1	4' - 9½"	S WINGWALL					
W909	STR	9	1	6' - 8"	S WINGWALL					
W910	STR	9	1	8' - 7"	S WINGWALL					
W911	STR	9	1	10' - 5½"	S WINGWALL					
W912	STR	9	1	12' - 4"	S WINGWALL					
W913	STR	9	1	14' - 2½"	S WINGWALL					
W914	STR	9	1	15' - 9"	S WINGWALL					

REINFORCEMENT BAR SCHEDULE CONT'D

MARK	TYPE	SIZE	NO.	LENGTH	LOCATION	A	B	C	D	G
ABUTMENT 2										
W401	10	4	36	4' - 4"	N & S WINGWALL	1' - 2"	1' - 7"	1' - 7"		
W508	9	5	2	16' - 4"	N WINGWALL	15' - 9"				7"
W545	2	5	2	19' - 7½"	S WINGWALL	2' - 11"	16' - 8½"	14' - 9½"	7' - 9"	
W546	STR	5	1	4' - 10"	S WINGWALL					
W547	STR	5	1	6' - 9"	S WINGWALL					
W548	STR	5	1	8' - 8"	S WINGWALL					
W549	STR	5	1	10' - 7"	S WINGWALL					
W550	STR	5	1	12' - 6"	S WINGWALL					
W551	STR	5	1	14' - 5"	S WINGWALL					
W552	STR	5	1	16' - 3½"	S WINGWALL					
W553	9	5	2	18' - 4"	S WINGWALL	17' - 9"				7"
W555	STR	5	2	2' - 1½"	S WINGWALL					
W556	STR	5	2	2' - 7½"	S WINGWALL					
W557	STR	5	2	3' - 1½"	S WINGWALL					
W558	STR	5	2	3' - 7½"	S WINGWALL					
W559	STR	5	2	4' - 1½"	S WINGWALL					
W560	STR	5	2	4' - 7½"	S WINGWALL					
W561	STR	5	2	5' - 1½"	S WINGWALL					
W562	STR	5	2	5' - 7½"	S WINGWALL					
W563	STR	5	2	6' - 1½"	S WINGWALL					
W564	STR	5	2	6' - 7½"	S WINGWALL					
W565	STR	5	2	7' - 1"	S WINGWALL					
W566	STR	5	2	7' - 7"	S WINGWALL					
W567	STR	5	2	8' - 1"	S WINGWALL					
W568	STR	5	2	8' - 7"	S WINGWALL					
W569	STR	5	8	9' - 1"	S WINGWALL					
W570	2	5	2	17' - 3"	N WINGWALL	2' - 11"	14' - 4"	12' - 9½"	6' - 5½"	
W571	STR	5	1	4' - 11"	N WINGWALL					
W572	STR	5	1	6' - 10½"	N WINGWALL					
W573	STR	5	1	8' - 10½"	N WINGWALL					
W574	STR	5	1	10' - 10½"	N WINGWALL					
W575	STR	5	1	12' - 10"	N WINGWALL					
W576	STR	5	1	14' - 10"	N WINGWALL					
W578	STR	5	2	2' - 1½"	N WINGWALL					
W579	STR	5	2	2' - 7"	N WINGWALL					
W580	STR	5	2	3' - 1"	N WINGWALL					
W581	STR	5	2	3' - 6½"	N WINGWALL					
W582	STR	5	2	4' - 0½"	N WINGWALL					
W583	STR	5	2	4' - 6"	N WINGWALL					
W584	STR	5	2	5' - 0"	N WINGWALL					
W585	STR	5	2	5' - 6"	N WINGWALL					
W586	STR	5	2	5' - 11½"	N WINGWALL					
W587	STR	5	2	6' - 5½"	N WINGWALL					
W588	STR	5	2	6' - 11"	N WINGWALL					
W589	STR	5	2	7' - 5"	N WINGWALL					
W590	STR	5	8	7' - 10½"	N WINGWALL					
W901	9	9	2	17' - 0"	N WINGWALL	15' - 9"				1' - 3"
W915	STR	9	1	4' - 10"	S WINGWALL					
W916	STR	9	1	6' - 9"	S WINGWALL					
W917	STR	9	1	8' - 8"	S WINGWALL					
W918	STR	9	1	10' - 7"	S WINGWALL					
W919	STR	9	1	12' - 6"	S WINGWALL					
W920	STR	9	1	14' - 5"	S WINGWALL					
W921	STR	9	1	16' - 3½"	S WINGWALL					
W922	9	9	2	19' - 0"	S WINGWALL	17' - 9"				1' - 3"
W923	STR	9	1	4' - 11"	N WINGWALL					
W924	STR	9	1	6' - 10½"	N WINGWALL					
W925	STR	9	1	8' - 10½"	N WINGWALL					
W926	STR	9	1	10' - 10½"	N WINGWALL					
W927	STR	9	1	12' - 10"	N WINGWALL					
W928	STR	9	1	14' - 10"	N WINGWALL					

10/22/2003

State Project No.	Federal Project No.	State Dist. No.	Fiscal Year	County	Sheet No.	Total Sheets
X316-H-100.40 06	APD 0484(251)C	5	2003	HARDY	292	670

BENDING DIAGRAM

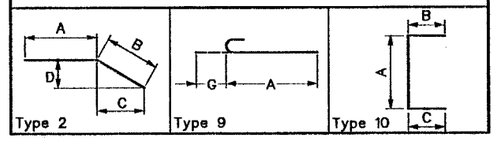

DIMENSIONS IN BENDING DIAGRAM ARE OUT-TO-OUT OF BARS.

NO.	REVISION	DATE:	BY:

W. VA. DEPARTMENT OF TRANSPORTATION
DIVISION OF HIGHWAYS

ROUTE US 48
MOOREFIELD DISTRICT
FORT RUN BRIDGE
WING WALL REINFORCING SCHEDULE

	DATE
DESIGNED JLH	06/03
DRAWN JLH	06/03
CHECKED MJ	06/03
CHECKED MJ	06/03

Baker
Michael Baker Jr., Inc. Charleston, W.Va.

SHEET S15 OF S40
BRIDGE NO. 10444

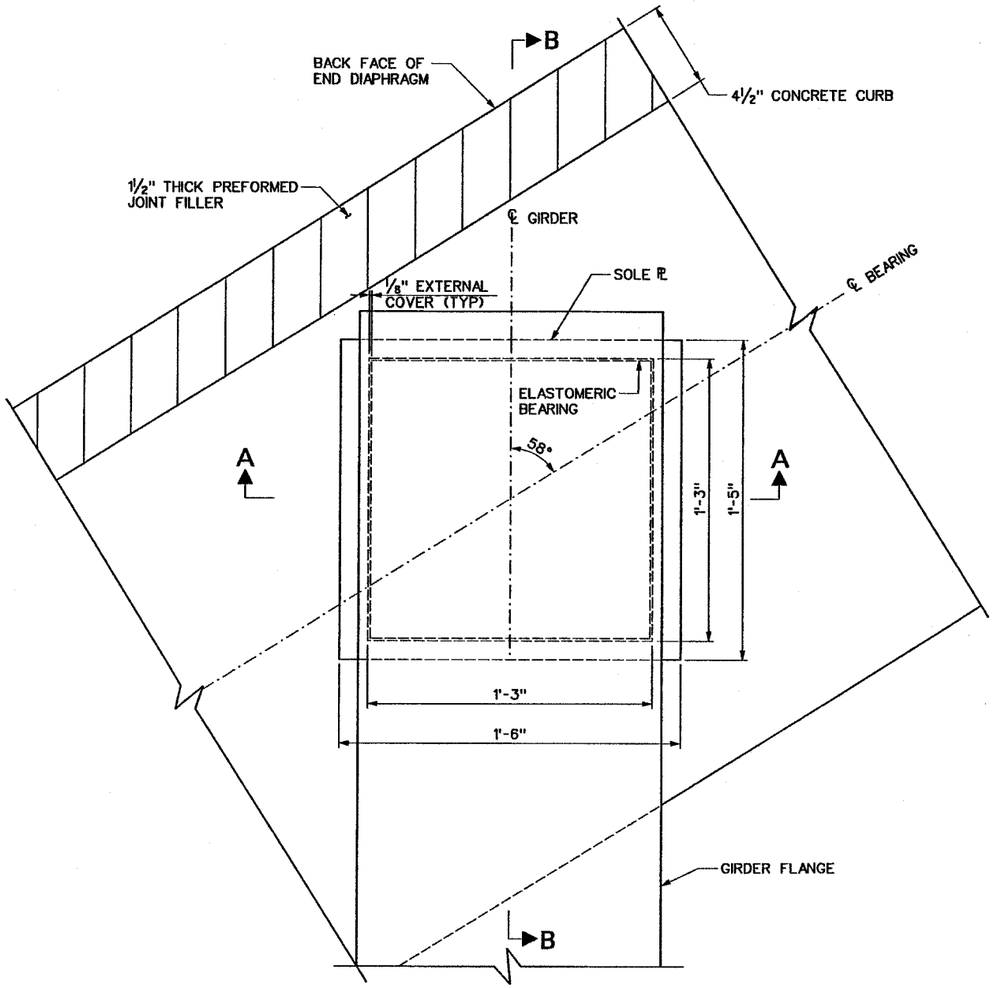

PLAN

3 0 3 INCHES

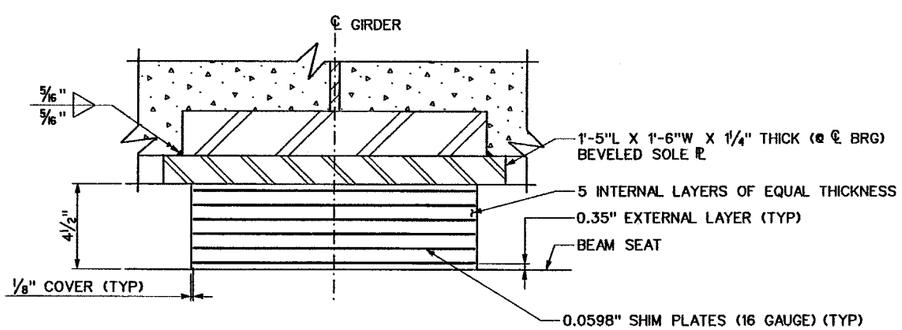

SECTION A–A

3 0 3 INCHES

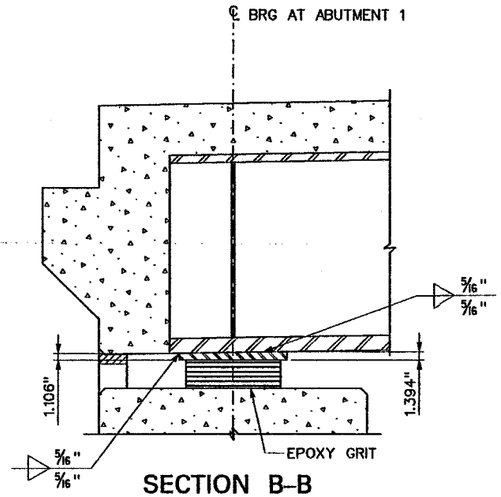

SECTION B–B
AT ABUTMENT 1

6 0 6 12 INCHES

NOTES:

1. PROVIDE ELASTOMER WITH A SHEAR MODULUS G= 0.130 KSI AT 73° F.

2. PROVIDE STRUCTURAL STEEL BEVELED SOLE PLATE CONFORMING TO AASHTO M270, GRADE 50W.

3. PROVIDE STEEL CONFORMING TO ASTM A1011, GRADE 50 FOR THE BONDED STEEL LAMINATE (SHIM PLATE).

4. BEARINGS SHALL BE SUBJECT TO TESTING REQUIREMENTS IN ACCORDANCE WITH AASHTO, LRFD CONSTRUCTION SPECIFICATION SECTION 18, CORRESPONDING TO DESIGN METHOD B.

5. INSTALL BEAMS AND BEARINGS TO ENSURE FULL CONTACT WITH BEARING SURFACES. IF FULL CONTACT IS NOT ACHIEVED AFTER THE DECK IS IN PLACE, THE CONTRACTOR WILL BE REQUIRED TO JACK AND RESET THE SUPERSTRUCTURE. PAYMENT FOR THIS WILL BE INCLUDED IN 615001-001, STEEL SUPERSTRUCTURE.

6. ALL COST ASSOCIATED WITH THE FABRICATION AND INSTALLATION OF THE ELASTOMERIC BEARINGS SHALL BE INCLUDED IN THE PRICE BID FOR ITEM 615029-001 NON-GUIDED BEARING, ELASTOMERIC. BEVELED SOLE PLATE SHALL BE PAID FOR UNDER ITEM 615001-001.

7. TOLERANCES: INDIVIDUAL ELASTOMER LAYER THICKNESS: +⅛" OF DESIGN VALUE

DESIGN THICKNESS	-0. +1/4"
PLAN DIMENSIONS	-0. +1/8"
EDGE COVER OF EMBEDDED LAMINATES	-0. +1/8"

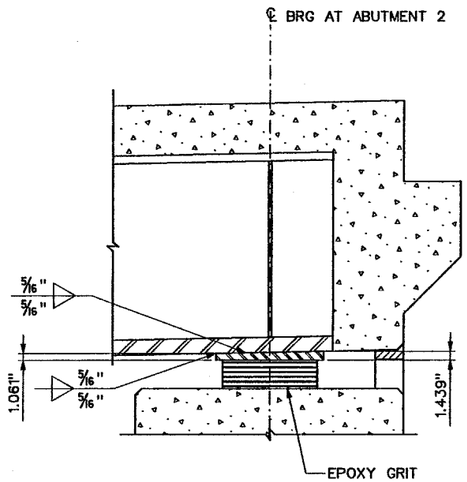

SECTION B–B
AT ABUTMENT 2

6 0 6 12 INCHES

ESTIMATE OF QUANTITIES

ITEM NO	ITEM	UNIT	QUANTITY
615029-001	NON-GUIDED BEARING, ELASTOMERIC	EA	20

NO.	REVISION	DATE:	BY:

W. VA. DEPARTMENT OF TRANSPORTATION
DIVISION OF HIGHWAYS

ROUTE US 48
MOOREFIELD DISTRICT
FORT RUN BRIDGE
BEARING DETAILS

DESIGNED	JDD	DATE	06/03
DRAWN	JME		06/03
CHECKED	AJT		06/03
CHECKED	AJT		06/03

Baker
Michael Baker Jr., Inc. Charleston, W.Va.

SHEET S16 OF S40
BRIDGE NO. 10444

09:02:23 AM 10/22/2003
L:\pro\Corridor\S...Bridge\Fort Run\Final\Drawings\FortRun-Final-Bearings.dgn

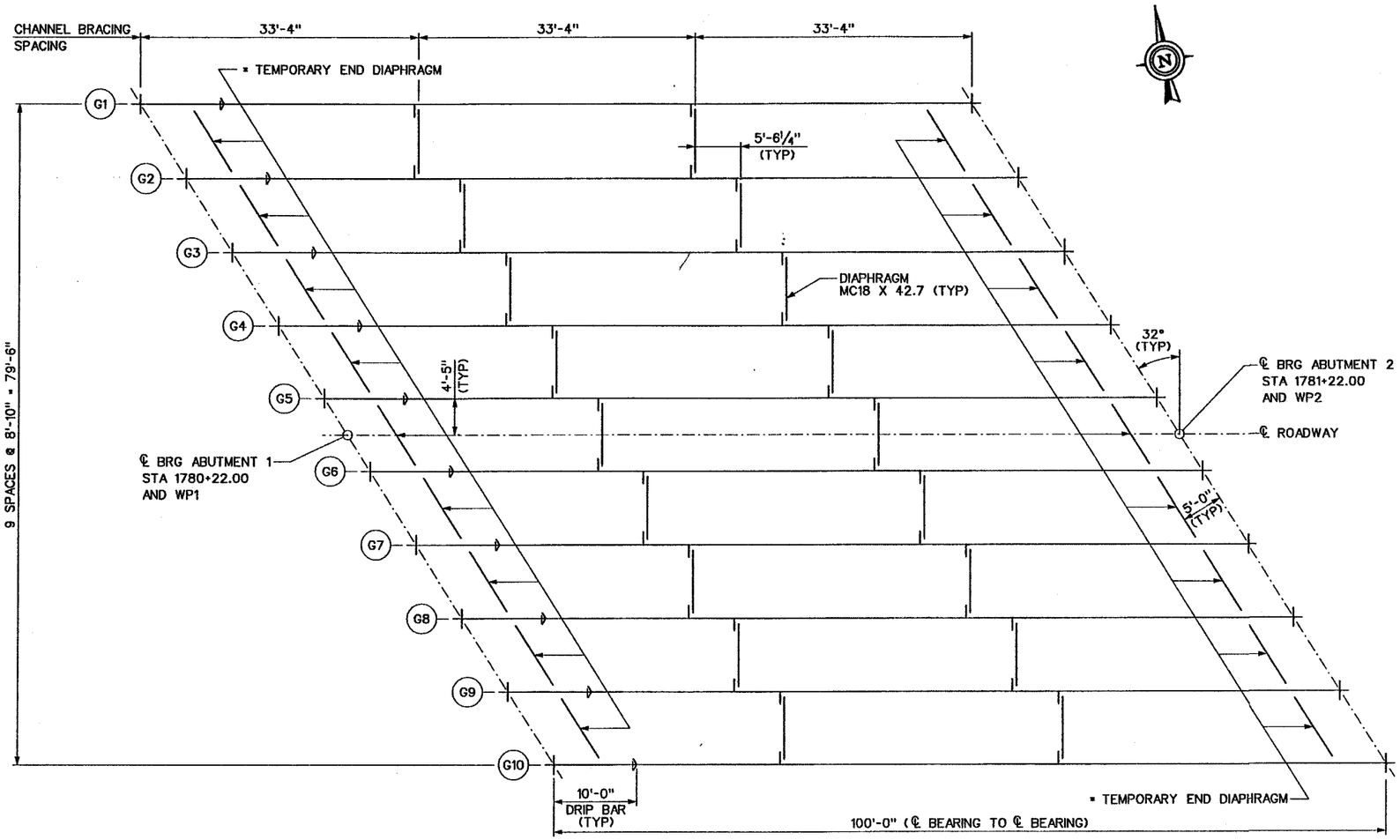

FRAMING PLAN

* TEMPORARY END DIAPHRAGMS SHALL BE DESIGNED AND FURNISHED BY THE CONTRACTOR (SEE GENERAL NOTES - SHOP DRAWINGS). THE TEMPORARY DIAPHRAGMS ARE TO BE REMOVED AFTER PLACEMENT AND CURING OF THE DECK.

NO.	REVISION	DATE:	BY:

W. VA. DEPARTMENT OF TRANSPORTATION
DIVISION OF HIGHWAYS

ROUTE US 48
MOOREFIELD DISTRICT
FORT RUN BRIDGE
FRAMING PLAN

DESIGNED JDD	DATE 06/03	
DRAWN MAD	06/03	
CHECKED AJT	06/03	
CHECKED AJT	06/03	

2 0 4 8 FEET

Baker
Michael Baker Jr., Inc. Charleston, W.Va.

SHEET S17 OF S40
BRIDGE NO. 10444

09:47:41 AM 10/22/200...
L:\proj\Corridor#\Sc...Bridge\Fort Run\Final\Drawings\FortRun-Final-frameplan.dgn

State Project No.	Federal Project No.	State Dist. No.	Fiscal Year	County	Sheet No.	Total Sheets
X316-H-100.40 06	APD 0484(251)C	5	2003	HARDY	295	670

10/22/2003

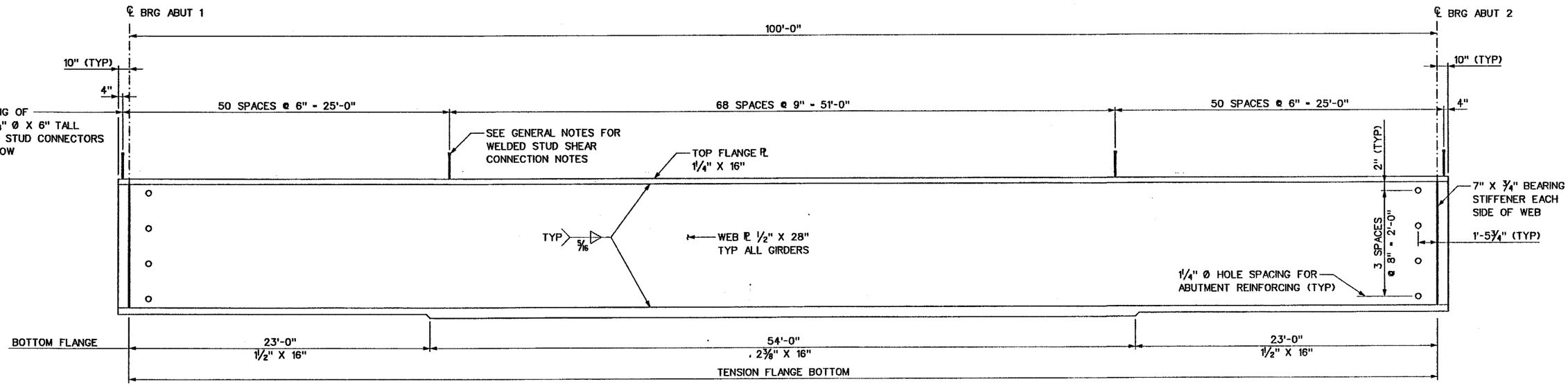

GIRDER ELEVATION
(GIRDERS G1 THROUGH G10)

NOTE:
BEVELED SOLE PLATE AT BEARINGS SHALL BE PROVIDED BY THE STEEL FABRICATOR

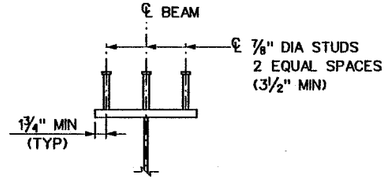

SHEAR CONNECTOR DETAIL
6 0 6 12 INCHES

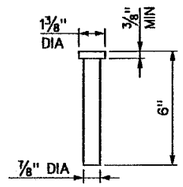

STUD DETAIL
3 0 3 INCHES

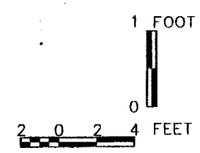

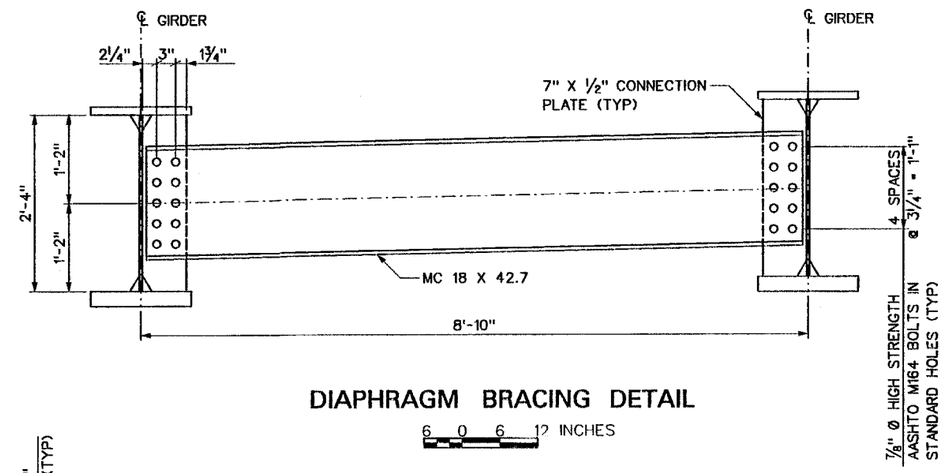

DIAPHRAGM BRACING DETAIL
6 0 6 12 INCHES

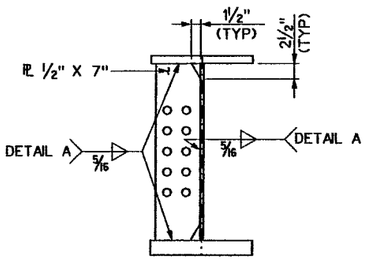

DIAPHRAGM CONNECTOR PLATE
6 0 6 12 INCHES

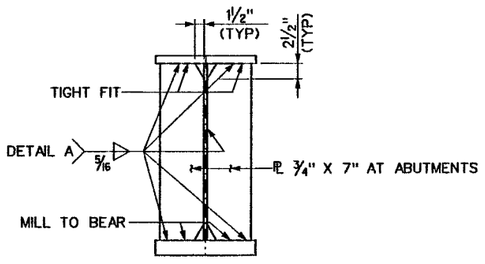

BEARING STIFFENERS
6 0 6 12 INCHES

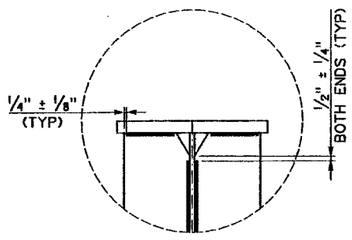

DETAIL A
6 0 6 INCHES

NO.	REVISION	DATE:	BY:

W. VA. DEPARTMENT OF TRANSPORTATION
DIVISION OF HIGHWAYS

ROUTE US 48
MOOREFIELD DISTRICT
FORT RUN BRIDGE
GIRDER ELEVATION
AND DETAILS

	DATE
DESIGNED JDD	06/03
DRAWN JME	06/03
CHECKED AJF	06/03
CHECKED AJF	06/03

Baker
Michael Baker Jr., Inc. Charleston, W.Va.

SHEET S18 OF S40
BRIDGE NO. 10444

L:\proj\CorridorH\...\Bridge\Fort Run\Final\Drawings\FortRun-Final-girderelev.dgn
09:50:15 AM
10/22/2...

10/22/2003	State Project No.	Federal Project No.	State Dist. No.	Fiscal Year	County	Sheet No.	Total Sheets
	X316-H-100.40 06	APD 0484(251)C	5	2003	HARDY	296	670

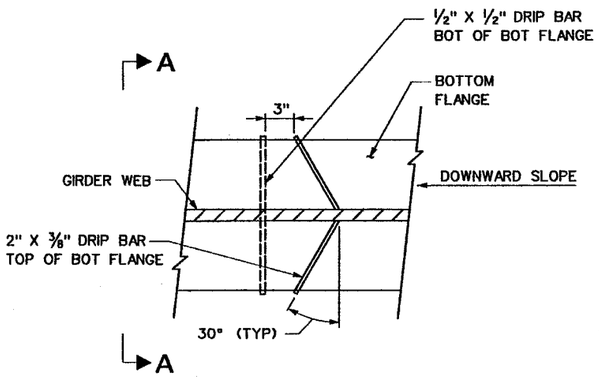

PLAN DRIP BAR

6 0 6 INCHES

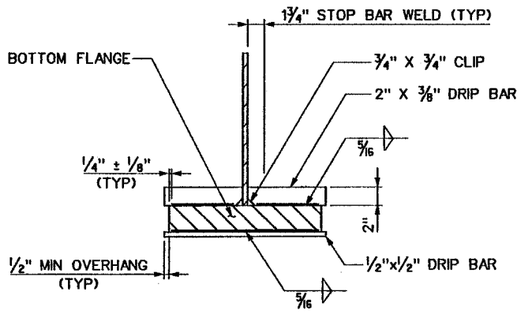

NOTE:
DRIP BAR ON TOP OF BOTTOM FLANGE SHALL BE CAULKED WITH DARK BROWN CAULKING AGAINST FLANGE, WEB AND FILLET WELD. INCLUDE COST IN ITEM 615001-001, STEEL SUPERSTRUCTURE

SECTION A-A

6 0 6 INCHES

CAMBER ORDINATES ('Y'), INCHES

GIRDER		PT 0	PT 1	PT 2	PT 3	PT 4	PT 5	PT 6	PT 7	PT 8	PT 9	PT 10
GIRDERS 1 AND 10	CAMBER DUE TO WEIGHT OF STEEL	0.0000	0.4930	0.9260	1.2530	1.4590	1.5300	1.4590	1.2530	0.9260	0.4930	0.0000
	CAMBER DUE TO WEIGHT OF DECK SLAB + STAY IN PLACE FORMS	0.0000	1.6940	3.1770	4.2930	4.9960	5.2360	4.9960	4.2930	3.1770	1.6940	0.0000
	CAMBER DUE TO WEIGHT OF PARAPETS + MEDIAN BARRIER	0.0000	0.1390	0.2610	0.3510	0.4080	0.4270	0.4080	0.3510	0.2610	0.1390	0.0000
	CAMBER DUE TO VERTICAL CURVE CORRECTION	0.0000	-0.2898	-0.5152	-0.6762	-0.7728	-0.8050	-0.7728	-0.6762	-0.5152	-0.2898	0.0000
	TOTAL CAMBER 'Y'	0.0000	2.0362	3.8488	5.2208	6.0902	6.3880	6.0902	5.2208	3.8488	2.0362	0.0000
GIRDERS 2 THROUGH 9	CAMBER DUE TO WEIGHT OF STEEL	0.0000	0.5030	0.9450	1.2780	1.4890	1.5610	1.4890	1.2780	0.9450	0.5030	0.0000
	CAMBER DUE TO WEIGHT OF DECK SLAB + STAY IN PLACE FORMS	0.0000	2.1500	4.0330	5.4500	6.3420	6.6470	6.3420	5.4500	4.0330	2.1500	0.0000
	CAMBER DUE TO WEIGHT OF PARAPETS + MEDIAN BARRIER	0.0000	0.1280	0.2390	0.3220	0.3740	0.3920	0.3740	0.3220	0.2390	0.1280	0.0000
	CAMBER DUE TO VERTICAL CURVE CORRECTION	0.0000	-0.2898	-0.5152	-0.6762	-0.7728	-0.8050	-0.7728	-0.6762	-0.5152	-0.2898	0.0000
	TOTAL CAMBER 'Y'	0.0000	2.4912	4.7018	6.3738	7.4322	7.7950	7.4322	6.3738	4.7018	2.4912	0.0000

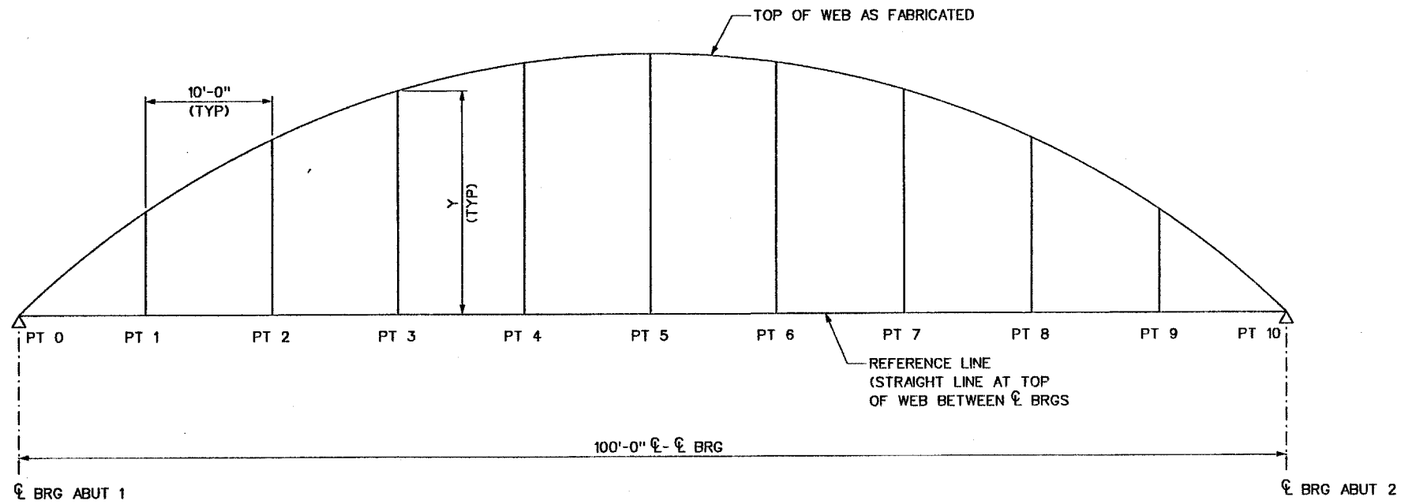

CAMBER DIAGRAM

NOT TO SCALE

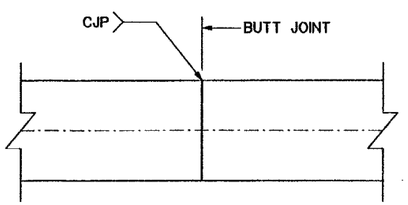

NOTE: GRIND ALL CJP WELDS FLUSH ON WEB AND FLANGES.

PLAN

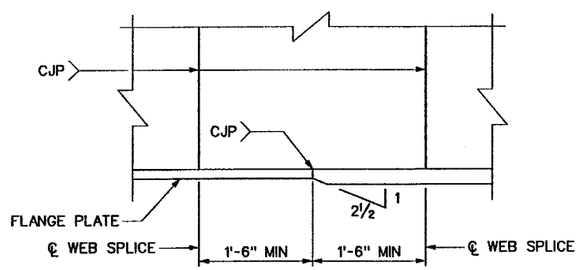

ELEVATION

FLANGE AND WEB SPLICE DETAIL

6 0 6 12 INCHES

NO.	REVISION	DATE:	BY:

W. VA. DEPARTMENT OF TRANSPORTATION
DIVISION OF HIGHWAYS

ROUTE US 48
MOOREFIELD DISTRICT
FORT RUN BRIDGE
CAMBER AND MISCELLANEOUS STEEL DETAILS

DESIGNED JDD	DATE 06/03	
DRAWN SMC	06/03	
CHECKED AJT	06/03	
CHECKED AJT	06/03	

Baker
Michael Baker Jr., Inc. Charleston, W.Va.

SHEET S19 OF S40
BRIDGE NO. 10444

09:51:15 AM 10/22/20...

L:\proj\Corridor\S... ...Bridge\Fort Run\Final\Drawings\FortRun-Final-misc1det.dgn

State Project No.	Federal Project No.	State Dist. No.	Fiscal Year	County	Sheet No.	Total Sheets
X316-H-100.40 06	APD 0484(251)C	5	2003	HARDY	297	670

10/22/2003

ALL REINFORCING STEEL SHALL CONFORM TO AASHTO M31, GRADE 60, fy = 60 KSI.

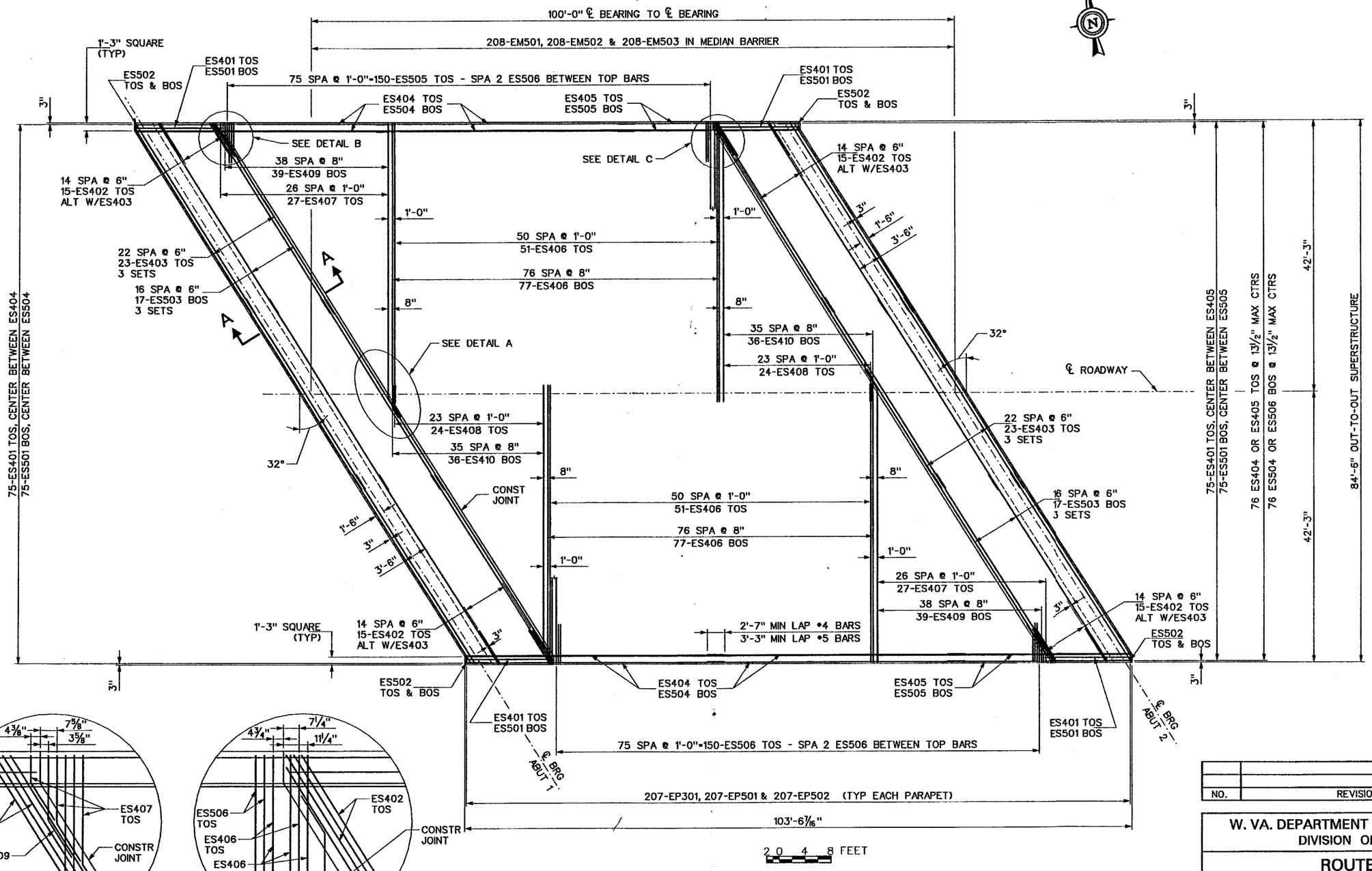

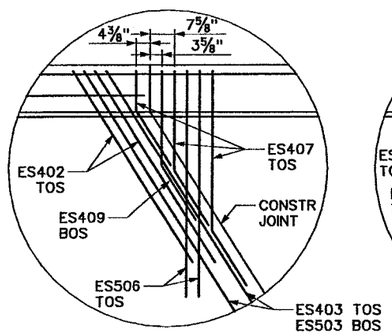

DETAIL B

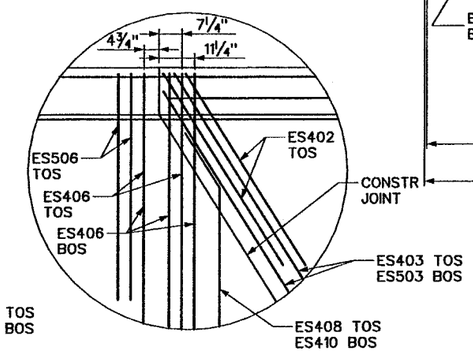

DETAIL C

2 0 4 8 FEET

NOTES:

1. FOR TYPICAL SECTION, SEE SHEET S21.
2. FOR DETAIL A, SEE SHEET S22.
3. FOR SECTION A-A, SEE SHEET S22.
4. FOR REINFORCING SCHEDULE, SEE SHEET S24.
5. FOR PARAPET PLAN, SEE SHEET S22.
6. FOR PARAPET SECTION, SEE SHEET S21.
7. FOR MEDIAN BARRIER PLAN, SEE SHEET S22.
8. FOR MEDIAN BARRIER SECTION, SEE SHEET S21.
9. FOR DECK SLAB ELEVATIONS, SEE SHEET S23.

NO.	REVISION	DATE:	BY:

W. VA. DEPARTMENT OF TRANSPORTATION
DIVISION OF HIGHWAYS

ROUTE US 48
MOOREFIELD DISTRICT
FORT RUN BRIDGE
DECK SLAB PLAN

DESIGNED	AJT	06/03
DRAWN	AJT	06/03
CHECKED	JDD	06/03
CHECKED	JDD	06/03

Baker
Michael Baker Jr., Inc. Charleston, W.Va.

SHEET S20 OF S40
BRIDGE NO. 10444

L:\proj\CorridorH\...\Bridge\Fort Run\Final\Drawings\FortRun-Final-REVslabpln.dgn

10/22/2003	State Project No.	Federal Project No.	State Dist. No.	Fiscal Year	County	Sheet No.	Total Sheets
	X316-H-100.40 06	APD 0484(251)C	5	2003	HARDY	298	670

FOR PARAPET PLAN, SEE SHEET S22.
FOR MEDIAN BARRIER PLAN, SEE SHEET S22.
FOR REINFORCING STEEL SCHEDULE, SEE SHEET S24.
ALL REINFORCING STEEL SHALL CONFORM TO AASHTO M31, GRADE 60, fy = 60 KSI.

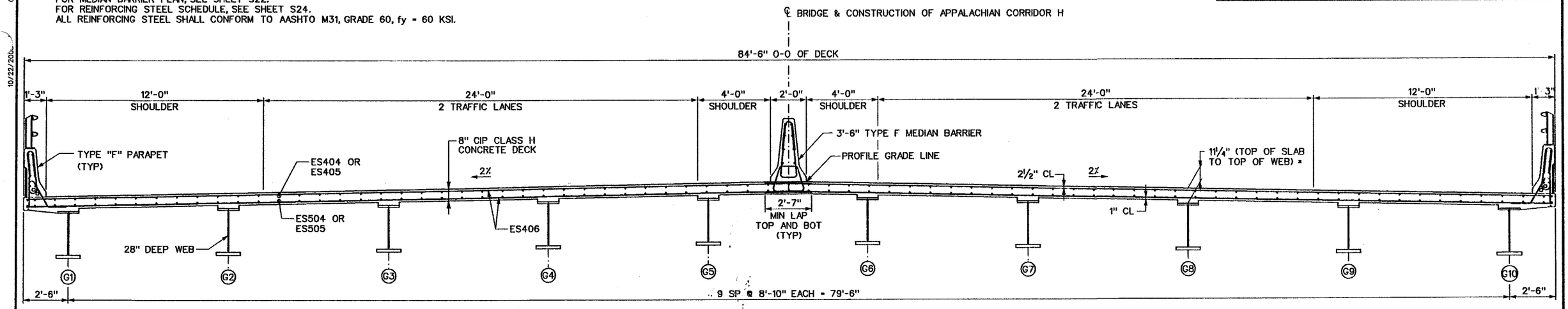

TYPICAL DECK SECTION

1 0 1 2 3 FEET

* FINAL DIMENSION AND CONCRETE HAUNCH WILL BE BASED ON ACTUAL IN PLACE TOP OF GIRDER ELEVATIONS SINCE DESIGN CAMBER AND ACTUAL CAMBER MAY DIFFER.

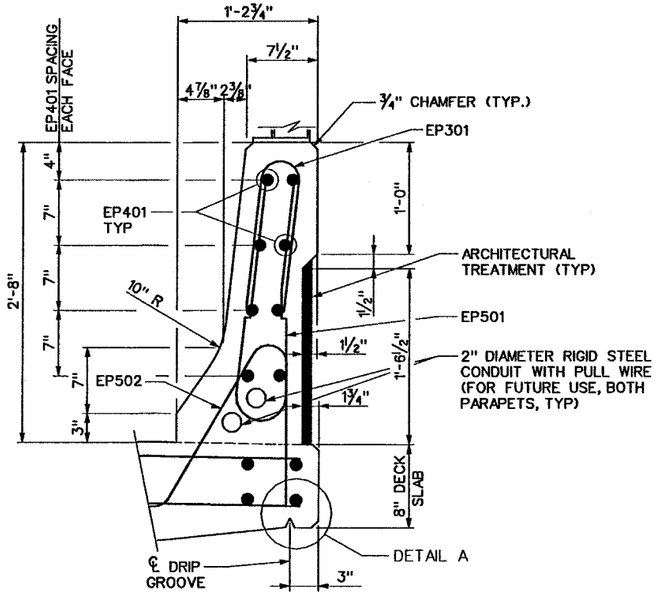

(RAILING NOT SHOWN FOR CLARITY)

TYPICAL TYPE "F" PARAPET DETAIL

6 0 6 INCHES

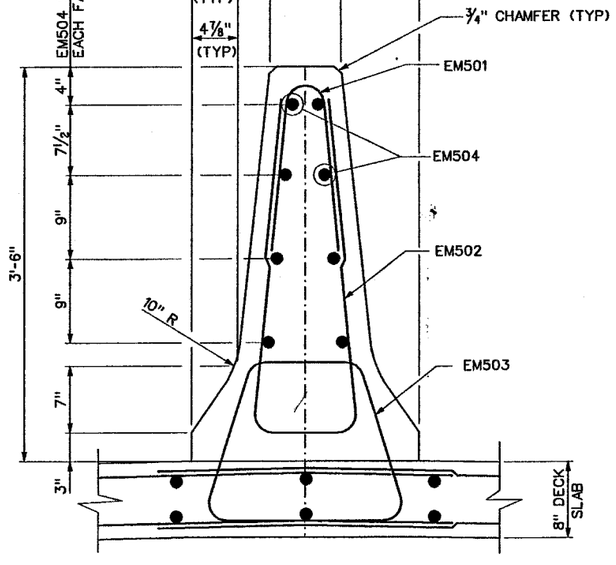

TYPICAL MEDIAN BARRIER DETAIL

6 0 6 INCHES

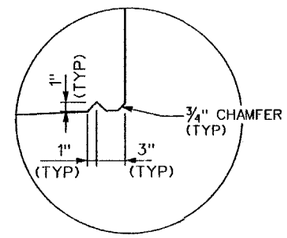

DETAIL A

6 0 6 INCHES

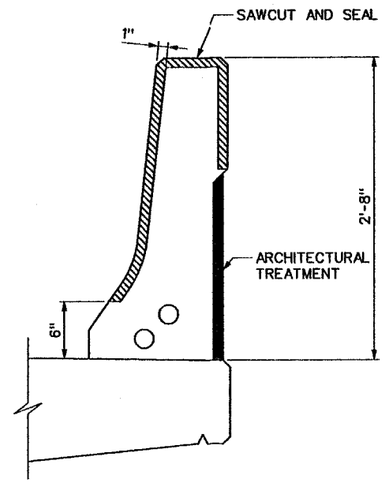

CONTROL JOINT DETAIL

6 0 6 INCHES

CONTROL JOINTS FOR CONCRETE PARAPETS:

SAWCUT 1¼" DEEP CONTROL JOINTS ALONG THE PERIMETER OF THE PARAPET AS SHOWN AND AS SOON AS THE SAW CAN BE OPERATED WITHOUT DAMAGING THE CONCRETE.

USE AN EDGE GUIDE, FENCE, OR JIG TO ENSURE THAT THE CUT JOINT IS STRAIGHT, TRUE, AND ALIGNED ON ALL FACES OF THE PARAPET. THE JOINT WIDTH SHALL BE THE WIDTH OF THE SAW BLADE, A NOMINAL WIDTH OF ¼ INCH.

PLACE CONTROL JOINTS AT A MAXIMUM SPACING OF 25'-0".

SEAL THE PERIMETER OF THE CONTROL JOINT TO A MINIMUM DEPTH OF ONE INCH WITH A POLYURETHANE OR POLYMERIC MATERIAL CONFORMING TO ASTM C920, TYPE S. LEAVE THE BOTTOM ONE-HALF INCH OF BOTH THE INSIDE AND OUTSIDE FACES OF THE PARAPET UNSEALED TO ALLOW ANY WATER WHICH MAY ENTER THE JOINT TO ESCAPE.

PAYMENT FOR CONTROL JOINTS SHALL BE INCIDENTAL TO CLASS H ARCHITECTURAL CONCRETE, ITEM * 601009-003.

NO.	REVISION	DATE:	BY:

W. VA. DEPARTMENT OF TRANSPORTATION
DIVISION OF HIGHWAYS

ROUTE US 48
MOOREFIELD DISTRICT
FORT RUN BRIDGE
TYPICAL SECTION

DESIGNED	JSD	06/03
DRAWN	jd	06/03
CHECKED	AJT	06/03
CHECKED	AJT	06/03

Baker
Michael Baker Jr., Inc. Charleston, W.Va.

SHEET S21 OF S40
BRIDGE NO. 10444

09:53:22 AM 10/22/2003
L:\proj\Corridorh\Sheets\Bridge\Fort Run\Final\Drawings\FortRun-Final-REVsldbasc.dgn

State Project No.	Federal Project No.	State Dist. No.	Fiscal Year	County	Sheet No.	Total Sheets
X316-H-100.40 06	APD 0484(251)C	5	2003	HARDY	299	670

10/22/2003

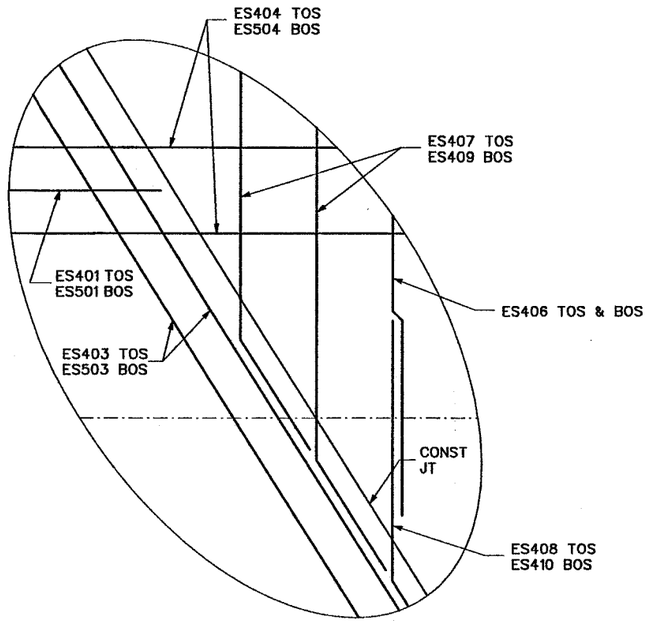

DETAIL A
NOT TO SCALE

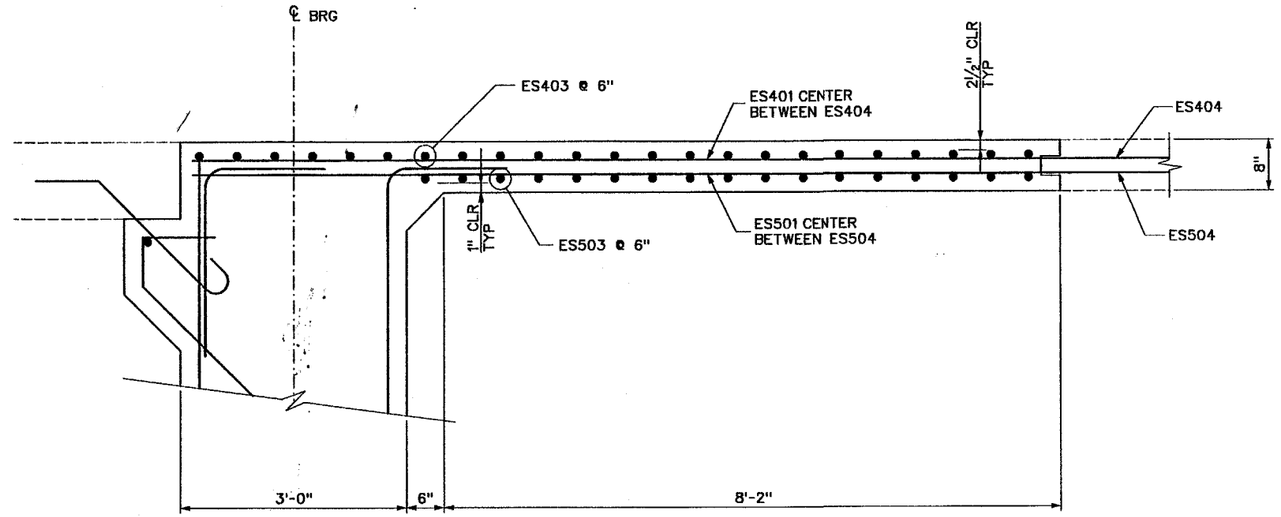

SECTION A-A
6 0 6 12 INCHES

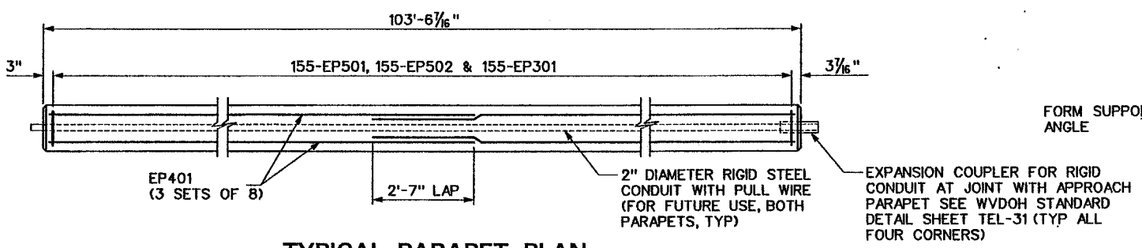

TYPICAL PARAPET PLAN
NOT TO SCALE

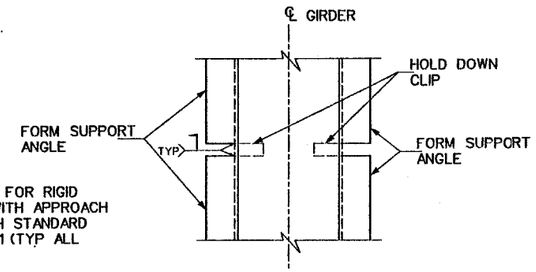

PLAN
NOT TO SCALE

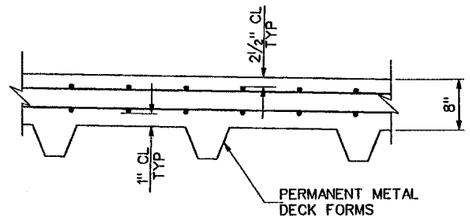

SECTION B-B
NOT TO SCALE

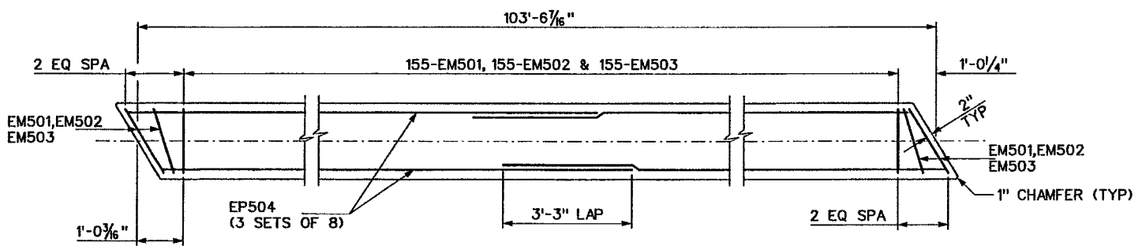

TYPICAL MEDIAN BARRIER PLAN
NOT TO SCALE

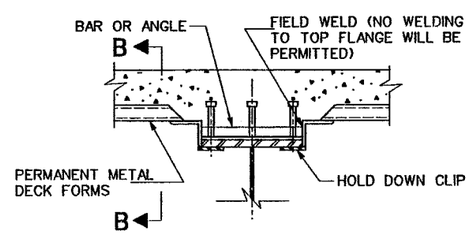

STAY-IN-PLACE FORM HAUNCH DETAIL
NOT TO SCALE

NOTES:
1. FOR PARAPET SECTION, SEE SHEET S21.
2. FOR MEDIAN BARRIER SECTION, SEE SHEET S21.
3. FOR REINFORCING STEEL SCHEDULE, SEE SHEET S24.

NO.	REVISION	DATE:	BY:

W. VA. DEPARTMENT OF TRANSPORTATION
DIVISION OF HIGHWAYS

ROUTE US 48
MOOREFIELD DISTRICT
FORT RUN BRIDGE
DECK SLAB DETAILS

DESIGNED	jcb	06/03
DRAWN	jcb	06/03
CHECKED	AJT	06/03
CHECKED	JDD	06/03

Baker
Michael Baker Jr., Inc. Charleston, W.Va.

SHEET S22 OF S40
BRIDGE NO. 10444

L:\proj\CorridorH\S...\Bridge\Fort Run\Final\Drawings\FortRun-Final-REVslabpln2.dgn
09:53:01 AM
10/22/20...

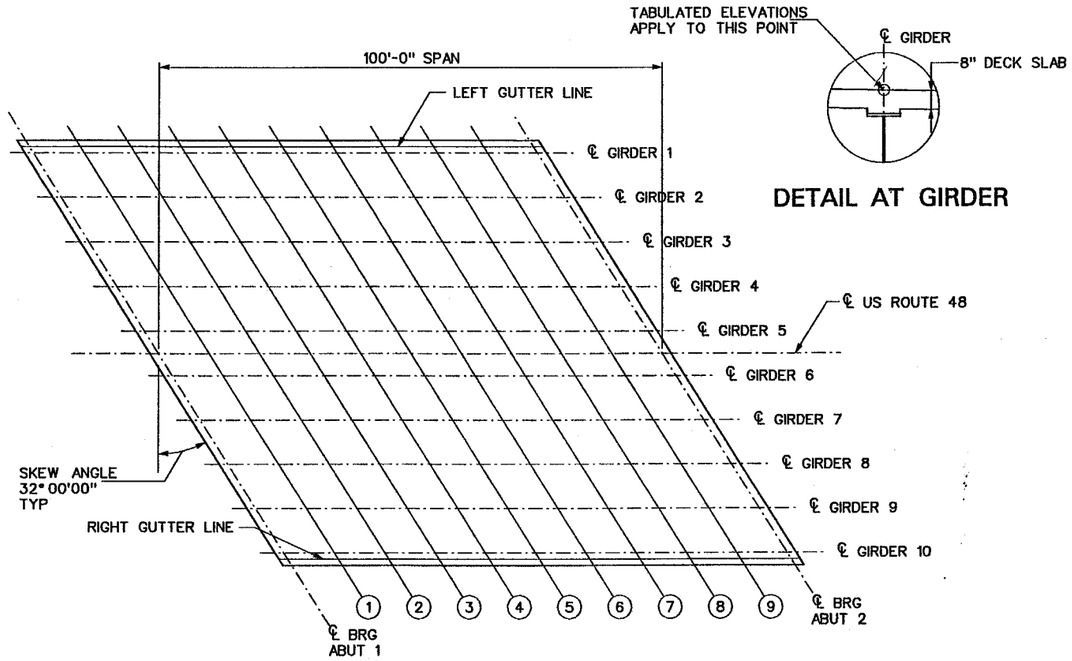

DETAIL AT GIRDER

TOP OF DECK ELEVATIONS

LOCATION	LEFT GUTTER EL	G1 EL	G2 EL	G3 EL	G4 EL	G5 EL	PGL EL	G6 EL	G7 EL	G8 EL	G9 EL	G10 EL	RIGHT GUTTER EL
℄ BRG ABUT 1	887.72	887.75	888.02	888.28	888.55	888.82	888.93	888.91	888.83	888.75	888.67	888.59	888.58
.1 SPAN	887.87	887.91	888.18	888.45	888.72	888.99	889.10	889.08	889.01	888.93	888.85	888.78	888.77
.2 SPAN	888.04	888.08	888.35	888.62	888.89	889.16	889.28	889.26	889.19	889.11	889.04	888.97	888.96
.3 SPAN	888.21	888.25	888.52	888.79	889.07	889.34	889.46	889.45	889.37	889.30	889.23	889.17	889.16
.4 SPAN	888.38	888.42	888.70	888.97	889.25	889.53	889.65	889.64	889.57	889.50	889.43	889.37	889.36
.5 SPAN	888.56	888.60	888.88	889.16	889.44	889.72	889.85	889.83	889.76	889.70	889.64	889.57	889.56
.6 SPAN	888.75	888.79	889.07	889.35	889.63	889.92	890.04	890.03	889.97	889.91	889.84	889.79	889.78
.7 SPAN	888.94	888.98	889.26	889.55	889.83	890.12	890.25	890.24	890.18	890.12	890.06	890.00	890.00
.8 SPAN	889.13	889.17	889.46	889.75	890.04	890.33	890.46	890.45	890.39	890.33	890.28	890.23	890.22
.9 SPAN	889.33	889.37	889.66	889.96	890.25	890.54	890.67	890.66	890.61	890.56	890.50	890.45	890.45
℄ BRG ABUT 2	889.54	889.58	889.87	890.17	890.46	890.76	890.89	890.89	890.83	890.78	890.73	890.69	890.68

ALL ELEVATIONS ARE IN FEET

AFTER ALL GIRDERS HAVE BEEN ERECTED, THE CONTRACTOR SHALL TAKE ELEVATIONS ALONG TOPS OF THE GIRDERS AT POINTS WHERE THE ELEVATIONS ARE TABULATED IN THE TABLE FOR TOP OF DECK SLAB ELEVATIONS. THE DIFFERENCE BETWEEN THESE ELEVATIONS AND THE GIVEN TOP OF DECK ELEVATIONS, PLUS THE AMOUNT OF DEFELCTION DUE TO DEAD LOAD OF CONCRETE DECK, PERMANENT METAL DECK FORMS, AND SUPERIMPOSED DEAD LOADS, SHALL BE THE THICKNESS OF THE SLAB OVER THE GIRDER AT THESE TABULATED POINTS. THE MINIMUM SLAB THICKNESS OVER THE GIRDERS SHALL NOT BE LESS THAT SHOWN IN THE DETAIL AT GIRDER. IF THE GIRDERS HAVE EXCESSIVE CAMBER AND THIS MINIMUM CANNOT BE OBTAINED, THE GRADE LINES SHALL BE ADJUSTED TO OBTAIN THIS MINIMUM THICKNESS.

DECK SLAB LAYOUT

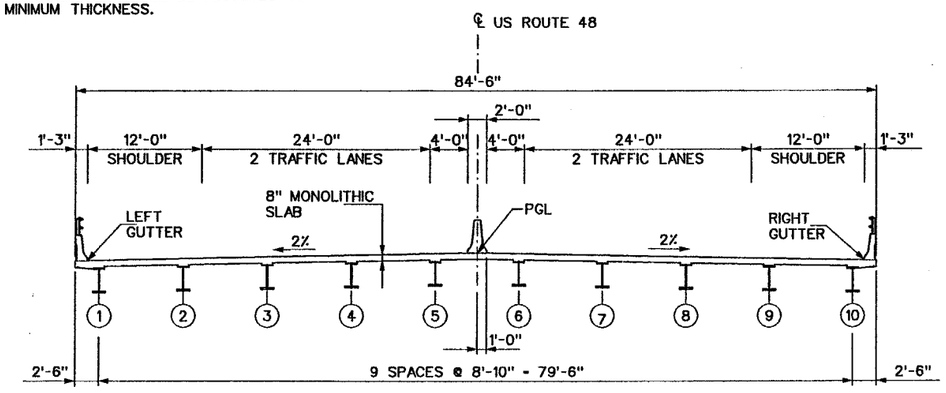

TRANSVERSE SECTION

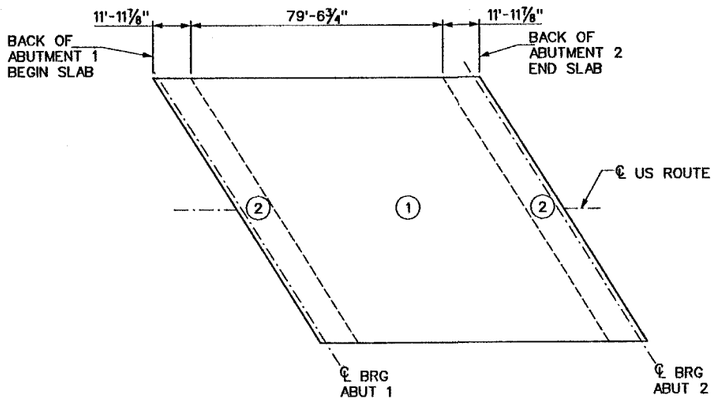

THE NUMBERS SHOWN INDICATE THE ORDER OF CONCRETE PLACEMENT IN THE DECK SLAB. THE ADJACENT PREVIOUS POUR SHALL OBTAIN A COMPRESSIVE STRENGTH OF 2000 PSI BEFORE THE NEXT POUR IS MADE. POUR 1 MAY BE SPLIT UP INTO TWO POURS WITH A LONGITUDINAL CONSTRUCTION JOINT ADJACENT TO THE MEDIAN BARRIER. THE CONTRACTOR SHALL SUBMIT HIS METHOD OF POURING THE DECK TO THE ENGINEER FOR APPROVAL. THIS SUBMITTAL SHALL INCLUDE PROVISIONS TO ACCOMODATE DIFFERENTIAL DEFLECTION BETWEEN GIRDERS 5 AND 6 ALONG THE LONGITUDINAL CONSTRUCTION JOINT.

DECK CONCRETE PLACING SEQUENCE

NO.	REVISION	DATE:	BY:

W. VA. DEPARTMENT OF TRANSPORTATION
DIVISION OF HIGHWAYS

ROUTE US 48
MOOREFIELD DISTRICT
FORT RUN BRIDGE
TOP OF DECK ELEVATIONS

DESIGNED jcb	DATE 06/03
DRAWN jcb	06/03
CHECKED AJT	06/03
CHECKED JSD	06/03

Baker
Michael Baker Jr., Inc. Charleston, W.Va.

SHEET S23 OF S40
BRIDGE NO. 10444

09:54:10 AM 10/22/20...
L:\proj\Corridor H\S...Bridge\Fort Run\Final\Drawings\FortRun-Final-Sidetiv.dgn

09:52:14 AM
10/22/2003

10/22/2003	State Project No.	Federal Project No.	State Dist. No.	Fiscal Year	County	Sheet No.	Total Sheets
	X316-H-100.40 06	APD 0484(251)C	5	2003	HARDY	301	670

REINFORCEMENT BAR SCHEDULE

MARK	TYPE	SIZE	NO.	LENGTH	LOCATION	A	B	C	D	E	REMARKS
DECK SLAB											
ES401	STR	4	150	13'-4"	TOP SLAB						
ES402	STR	4	60	6'-0"	TOP SLAB						
ES403	STR	4	138	34'-10"	TOP SLAB						
ES404	STR	4	152	40'-0"	TOP SLAB						
ES405	STR	4	76	28'-3"	TOP SLAB						
ES406	STR	4	256	43'-4"	TOP & BOTTOM						
ES407	2	4	54	VARIES	TOP SLAB	VARIES	1'-8 5/8"	1'-5 1/2"	0'-11"		DIM 'A' VARIES FROM 1'-0" TO 42'-8 1/2" BY 1'-7 1/4"
ES408	2	4	48	VARIES	TOP SLAB	VARIES	1'-8 5/8"	1'-5 1/2"	0'-11"		DIM 'A' VARIES FROM 3'-9" TO 40'-2" BY 1'-7"
ES409	2	4	78	VARIES	BOTTOM SLAB	VARIES	1'-8 5/8"	1'-5 1/2"	0'-11"		DIM 'A' VARIES FROM 2'-8 3/4" TO 42'-8 1/2" BY 1'-5/8"
ES410	2	4	72	VARIES	BOTTOM SLAB	VARIES	1'-8 5/8"	1'-5 1/2"	0'-11"		DIM 'A' VARIES FROM 3'-4 1/8" TO 40'-2" BY 1'-5/8"
ES501	STR	5	150	13'-5"	BOTTOM SLAB						
ES502	1	5	8	4'-4"	TOP & BOTTOM	3'-3"	1'-1"				
ES503	STR	5	102	34'-10"	BOTTOM SLAB						
ES504	STR	5	152	40'-0"	BOTTOM SLAB						
ES505	STR	5	76	29'-7"	BOTTOM SLAB						
ES506	STR	5	300	6'-0"	TOP SLAB						
PARAPET											
EP301	3	3	414	2'-10 1/4"	PARAPET	1'-4"	0'-4"				
EP401	STR	4	48	28'-11"	PARAPET						
EP501	4	5	414	4'-6 3/4"	PARAPET	1'-2"	0'-4"	1'-0"	0'-5 1/4"		
EP502	5	5	414	4'-2 7/16"	DECK SLAB	2'-7/8"	1'-0"	0'-11"	1'-5"		
MEDIAN											
EM501	6	5	208	3'-1 5/8"	MEDIAN BARRIER	0'-1 1/2"	0'-7"	1'-4"			
EM502	7	5	208	6'-8 1/4"	MEDIAN BARRIER	0'-11 1/2"	1'-1"	0'-4"	0'-3 1/2"		
EM503	8	5	208	6'-9 5/8"	DECK SLAB	1'-9 5/8"	1'-4 5/8"	0'-11 1/4"	0'-5 1/8"		
EM504	STR	5	24	28'-11"	MEDIAN BARRIER						

DIMENSION VARIATION TABLE

MARK	NO EA LEN	DIM	FROM	TO	VARY BY	DIM	FROM	TO	VARY BY

BENDING DIAGRAM

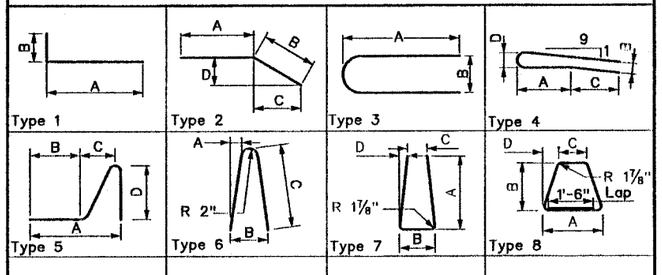

DIMENSIONS IN BENDING DIAGRAM ARE OUT-TO-OUT OF BARS.

NO.	REVISION	DATE:	BY:

W. VA. DEPARTMENT OF TRANSPORTATION
DIVISION OF HIGHWAYS

ROUTE US 48
MOOREFIELD DISTRICT
FORT RUN BRIDGE
DECK SLAB REINFORCING SCHEDULE

	DESIGNED	DRAWN	CHECKED	CHECKED
	jcb	jcb	AJT	JDD
DATE	06/03	06/03	06/03	06/03

Baker
Michael Baker Jr., Inc. Charleston, W.Va.

SHEET S24 OF S40
BRIDGE NO. 10444

L:\pro\Corridor\...ct\Bridge\Fort Run\Final\Drawings\FortRun-Final-REV\slabbars.dgn

10/22/2003

State Project No.	Federal Project No.	State Dist. No.	Fiscal Year	County	Sheet No.	Total Sheets
X316-H-100.40 06	APD 0484(251)C	5	2003	HARDY	302	670

NOTES:

Aluminum material shall be in accordance with Sections 709.31 through 709.41 of the Standard Specifications.

Stainless steel bolts shall be in accordance with ASTM F593. Stainless steel nuts shall be in accordance with ASTM F594. Stainless steel washers shall be the same alloy as the bolts & nuts.

Anchor bolt assemblies shall be cast in place or drilled and grouted. All parts of the anchor bolt assembly shall be galvanized in accordance with AASHTO M111. In addition, the exposed portions of the anchor bolt assemblies shall be painted in accordance with the paint manufacturers recommendations. The color of the final top coat shall be 30045 in accordance with Federal Standard 595

All exposed sharp edges shall be rounded. All rough-cut ends and edges shall be ground or filed smooth.

Rail posts shall be set normal to the roadway grade.

Curved rails shall be shop fabricated to the radius.

Elastomeric bearing pads shall be placed under each post. The pad shall cover the entire contact area between the post and concrete and shall be neatly trimmed. The pads shall meet the requirements of Section 715.15.

Cost of anchor bolt assemblies, railposts, rails, hardware, anodized coloring, galvanizing, painting and elastomeric bearing pads shall be included in the unit price bid for Item 617003-001, Aluminum Railing, Anodized, per linear foot.

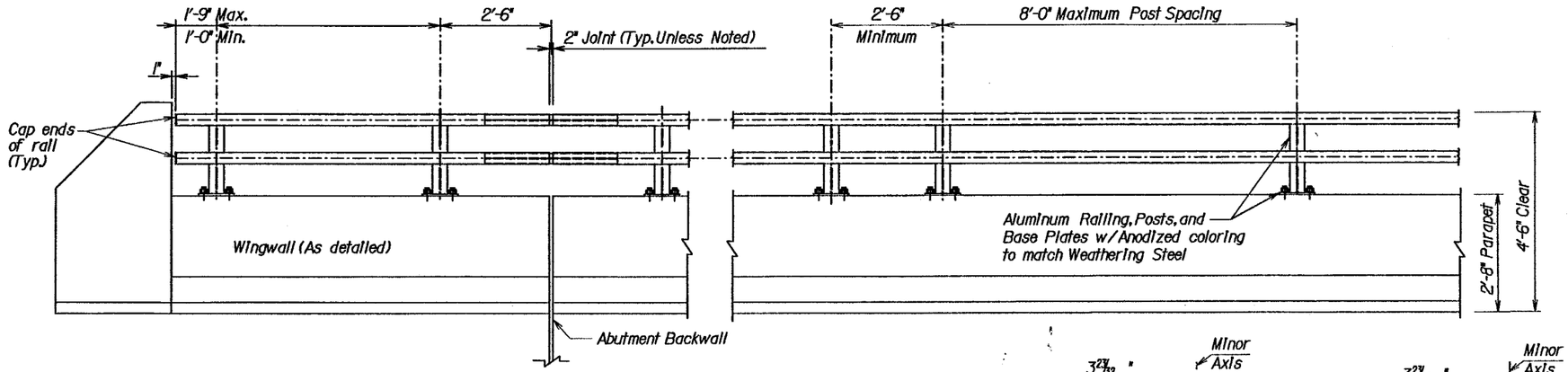

TYPICAL ELEVATION

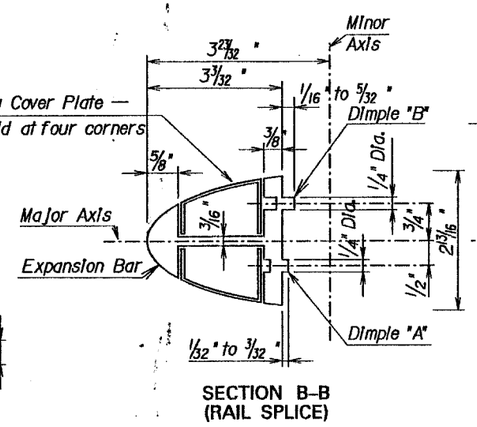

SECTION B-B (RAIL SPLICE)

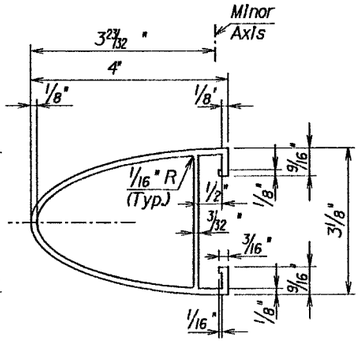

RAIL SECTION

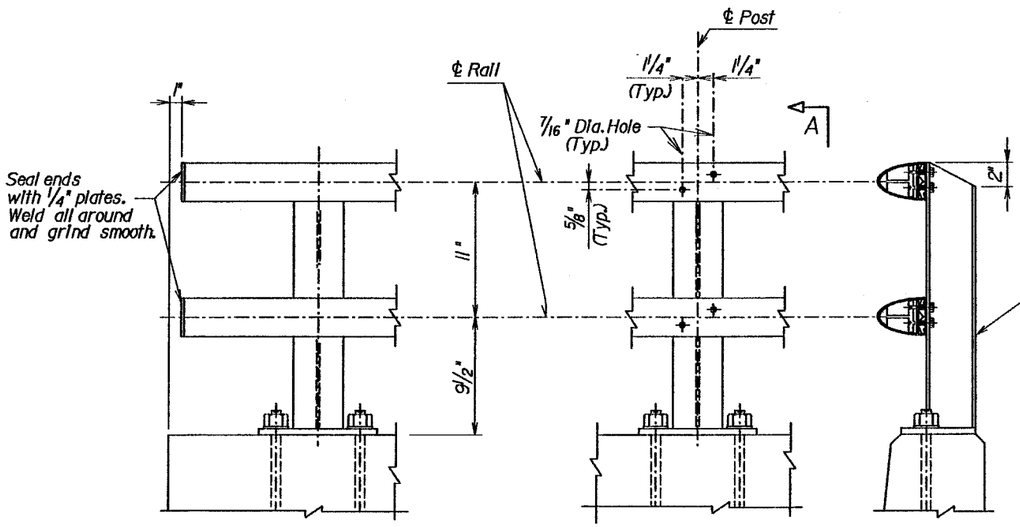

RAIL TERMINATION

POST AND RAIL CONNECTIONS

SECTION A-A

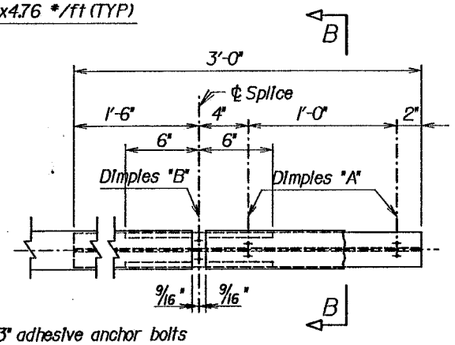

SPLICE SLEEVE

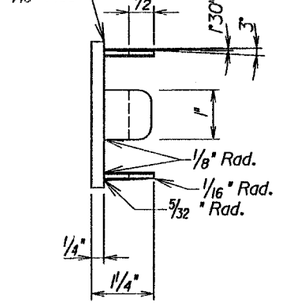

VIEW D-D

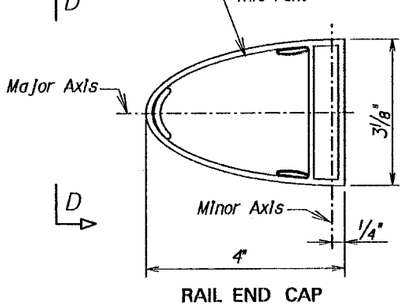

RAIL END CAP

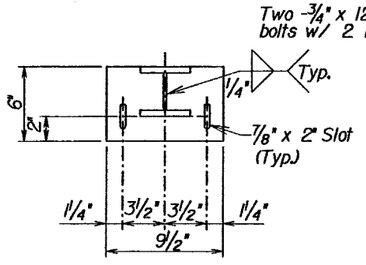

POST BASE PLATE DETAIL

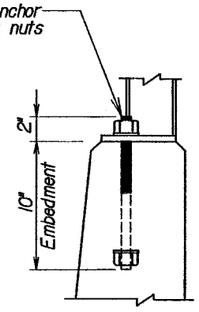

TYP. ANCHOR BOLT (CAST-IN-PLACE ALT.)

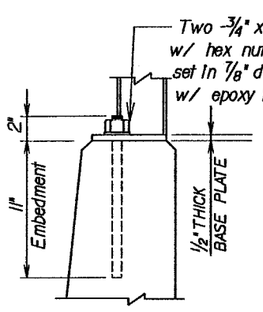

TYP. ANCHOR BOLT (DRILLED ALT.)

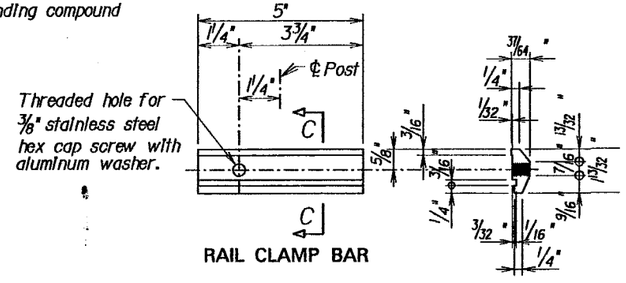

RAIL CLAMP BAR

SECTION C-C

NO.	REVISION	DATE:	BY:

W. VA. DEPARTMENT OF TRANSPORTATION
DIVISION OF HIGHWAYS

ROUTE US 48
MOOREFIELD DISTRICT
FORT RUN BRIDGE
RAILING DETAILS

DESIGNED	JSD	06/03
DRAWN	JMC	06/03
CHECKED	PCM	06/03
CHECKED	AJT	06/03

Baker
Michael Baker Jr., Inc. Charleston, W.Va.

SHEET S25 OF S40
BRIDGE NO. 10444

08:59:32 AM 10/22/20..

L:\proj\Corridor\...Bridge\Fort Run\Final\Drawings\FortRun-Final-Aluminumrailing.dgn

State Project No.	Federal Project No.	State Dist. No.	Fiscal Year	County	Sheet No.	Total Sheets
X316-H-100.40 06	APD 0484(251)C	5	2003	HARDY	303	670

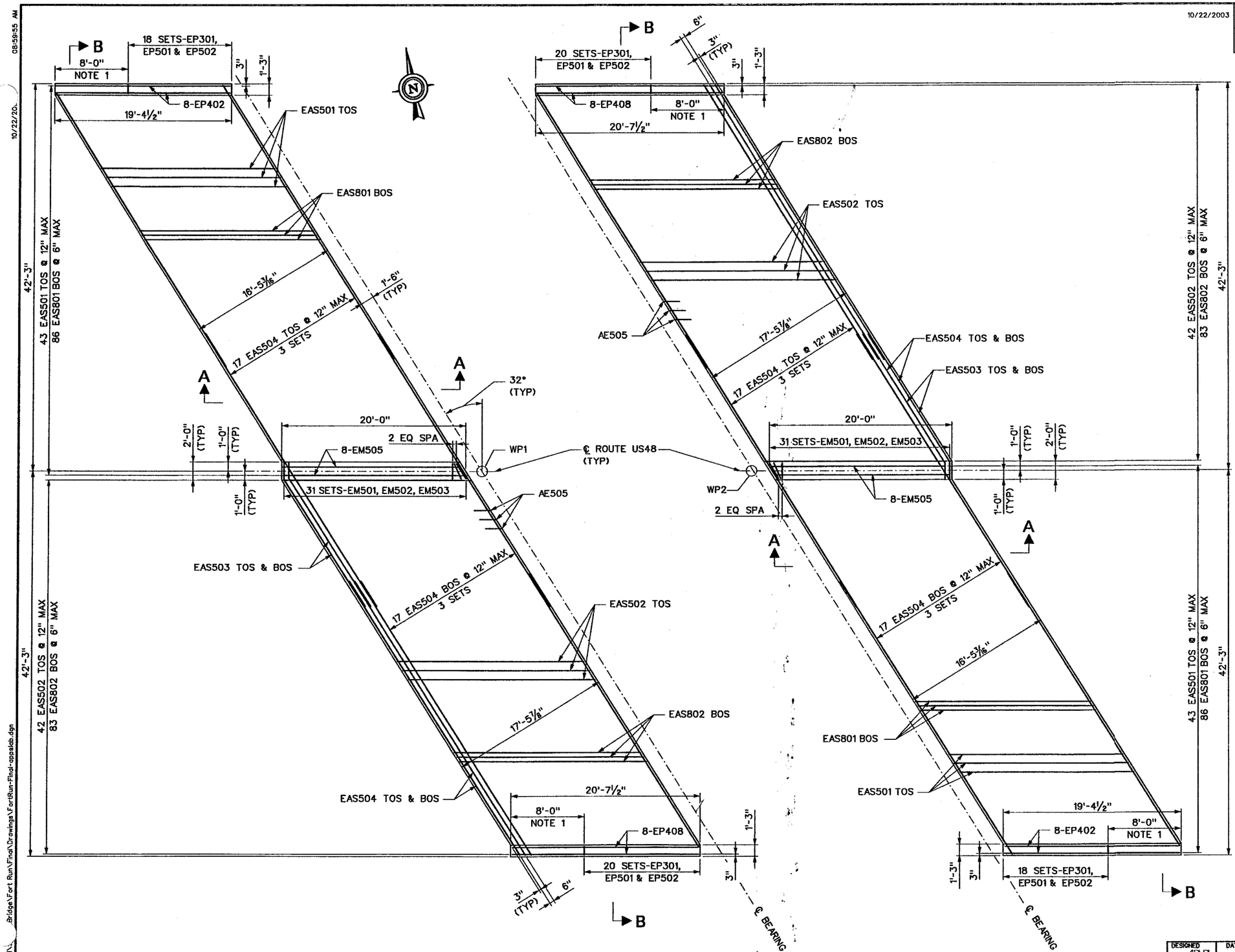

NOTES:

1. FOR SECTION A-A AND B-B, SEE SHT S27.
2. FOR TERMINAL WALL BARS, SEE SHT S29.

2 0 2 4 6 FEET

NO.	REVISION	DATE:	BY:

W. VA. DEPARTMENT OF TRANSPORTATION
DIVISION OF HIGHWAYS

ROUTE US 48
MOOREFIELD DISTRICT
FORT RUN BRIDGE
APPROACH SLAB PLAN

		DATE
DESIGNED	JDD	06/03
DRAWN	JLH	06/03
CHECKED	MJT	06/03
CHECKED	MJT	06/03

Baker
Michael Baker Jr., Inc. Charleston, W.Va.

SHEET S26 OF S40
BRIDGE NO. 10444

08:59:55 AM
10/22/20..
L:\pro\Corridor H\...Bridge\Fort Run\Final\Drawings\FortRun-Final-appslab.dgn

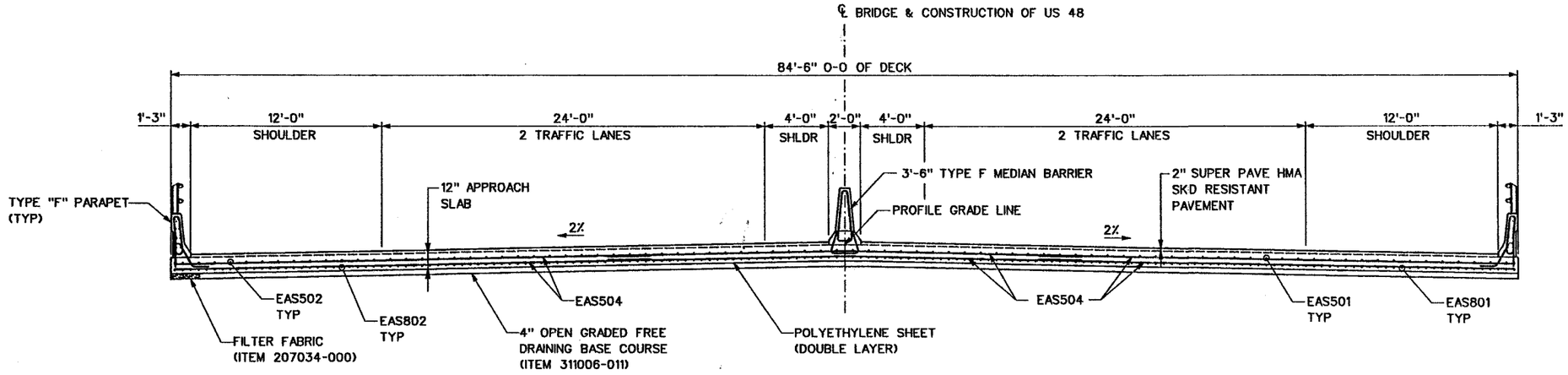

SECTION B–B

(PERPENDICULAR TO ℄ OF US 48)

2 0 2 4 FEET

APPROACH SLAB QTY (ROADWAY ITEMS–FOR INFORMATION ONLY)

ITEM NO	DESCRIPTION	UNIT	ABUT 1	ABUT 2
502001-012	12" PCC APPROACH SLAB	SY	188	188
	CLASS B CONCRETE	CY	63	63
	EPOXY COATED REINF STEEL BARS	LB	14420	14420
	POLYETHYLENE SHEET (DOUBLE LAYER)	SY	376	376
207034-000	FABRIC FOR SEPARATION	SY	188	188
311006-001	OPEN GRADED FREE DRAINING BASE COURSE	CY	21	21
402001-011	2" SUPERPAVE HMA SKID RESISTANT PAVEMENT	TN	20	20

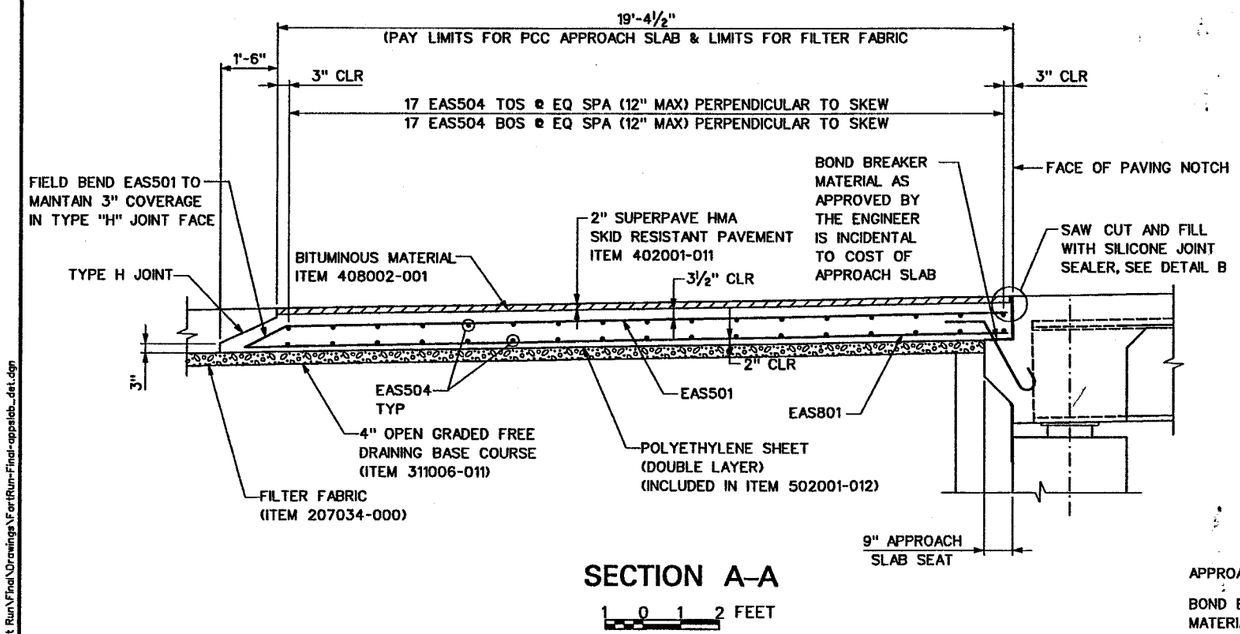

SECTION A–A

1 0 1 2 FEET

REINFORCING BAR LIST

MARK	TYPE	REQ'D	LENGTH (FT)
APPROACH SLABS			
EAS501	STR	86	19'-0½"
EAS502	STR	84	20'-2¾"
EAS503	BENT	8	17'-5½"
EAS504	STR	204	35'-3"
EAS801	STR	172	19'-0½"
EAS802	STR	166	20'-2¾"

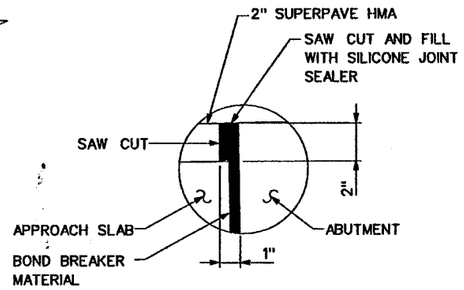

DETAIL B

3 0 3 INCHES

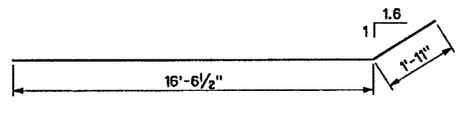

EAS503

NO.	REVISION	DATE:	BY:

W. VA. DEPARTMENT OF TRANSPORTATION
DIVISION OF HIGHWAYS

ROUTE US 48
MOOREFIELD DISTRICT
FORT RUN BRIDGE
APPROACH SLAB DETAILS

	DATE
DESIGNED JDD	06/03
DRAWN JCH	06/03
CHECKED MJF	06/03
CHECKED MJF	06/03

Baker
Michael Baker Jr., Inc. Charleston, W.Va.

SHEET S27 OF S40
BRIDGE NO. 10444

01:25:27 PM 03/02/
L:\PROJ\Corridor...16\Bridge\Fort Run\Final\Drawings\FortRun-Final-approlab_det.dgn

03/02/2004	State Project No.	Federal Project No.	State Dist. No.	Fiscal Year	County	Sheet No.	Total Sheets
	X316-H-100.40 06	APD 0484(251)C	5	2003	HARDY	305	670

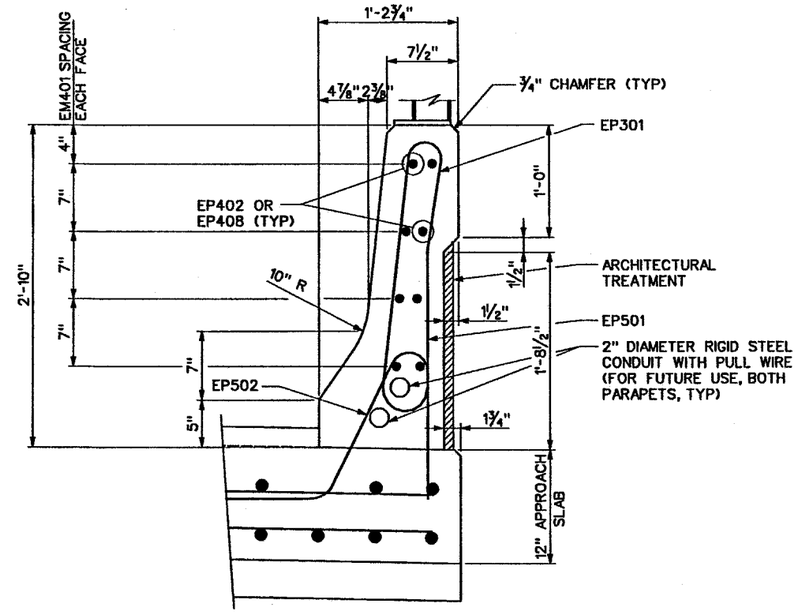

(BICYCLE RAIL NOT SHOWN FOR CLARITY)

SECTION A–A

6 0 6 INCHES

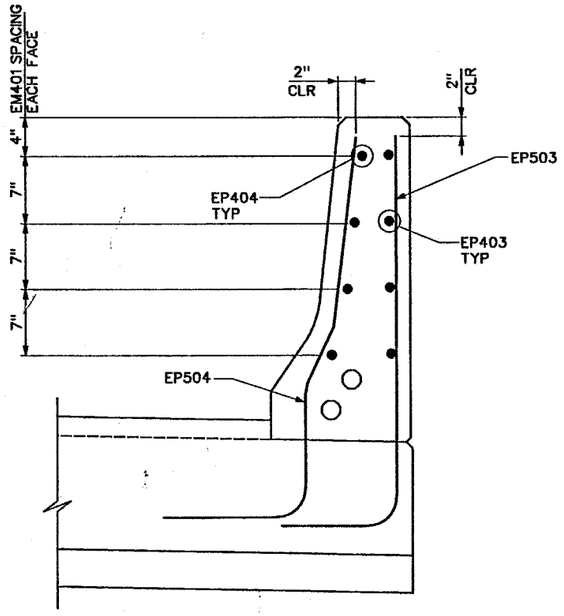

SECTION B–B

6 0 6 INCHES

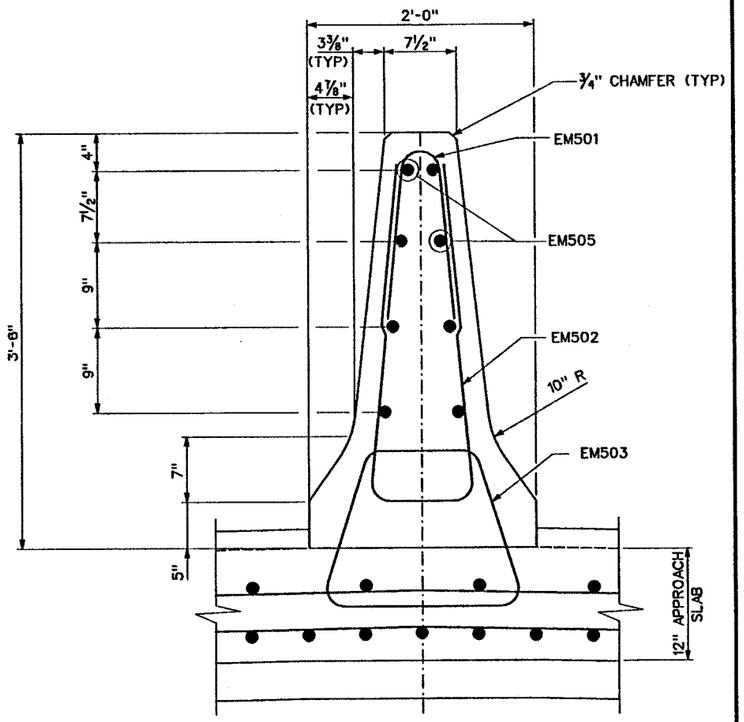

TYPICAL MEDIAN BARRIER DETAIL

6 0 6 INCHES

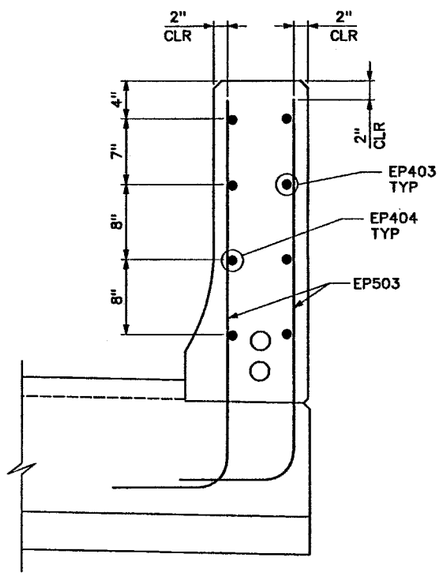

SECTION C–C

6 0 6 INCHES

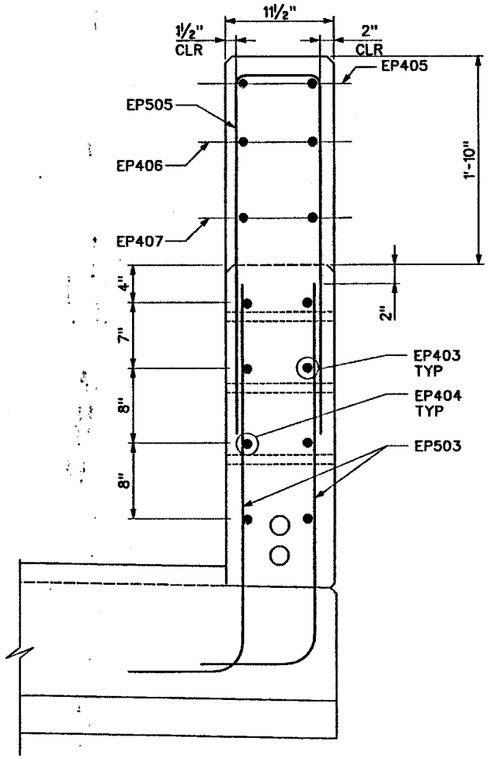

SECTION D–D

6 0 6 INCHES

NO.	REVISION	DATE:	BY:

W. VA. DEPARTMENT OF TRANSPORTATION
DIVISION OF HIGHWAYS

ROUTE US 48
MOOREFIELD DISTRICT
FORT RUN BRIDGE
BARRIER DETAILS ON APPROACH SLAB

	DATE
DESIGNED JDD	06/03
DRAWN JLH	06/03
CHECKED MJ	06/03
CHECKED MJ	06/03

Baker
Michael Baker Jr., Inc. Charleston, W.Va.

SHEET S28 OF S40
BRIDGE NO. 10444

L:\proj\Corridor\...\Bridge\Fort Run\Final\Drawings\FortRun-Final-appalob_barrier.dgn

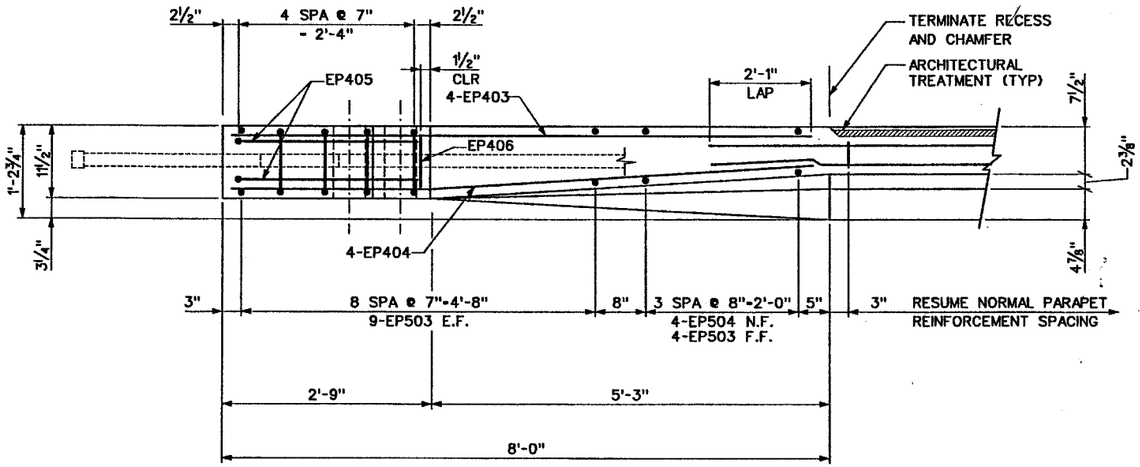

PLAN

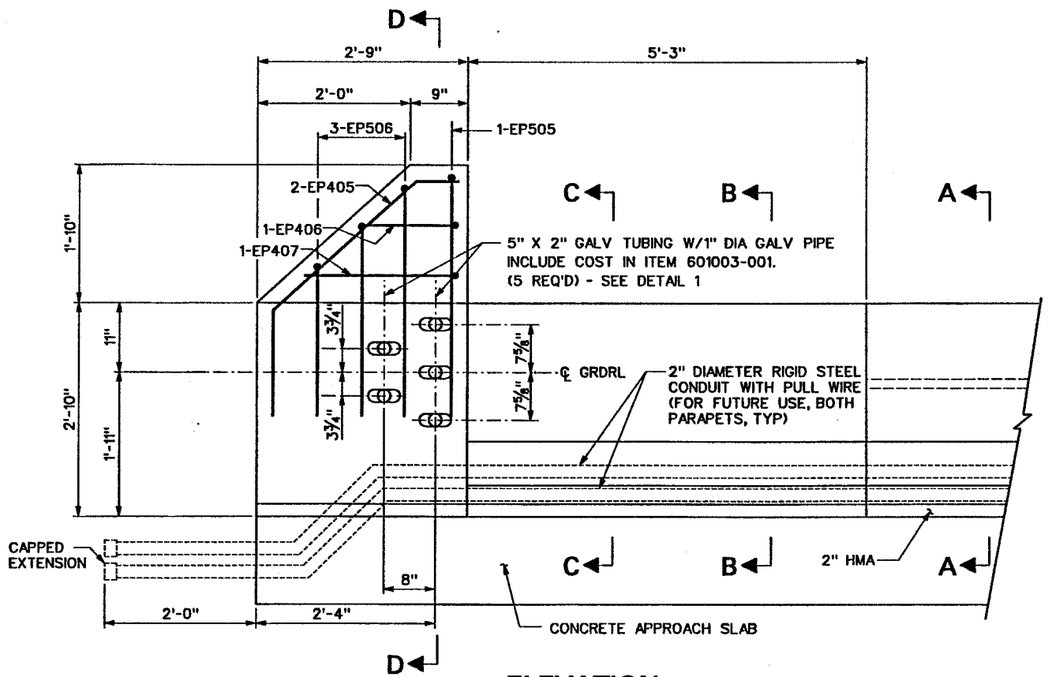

ELEVATION
TERMINAL WALL ON TOP OF APPROACH SLAB

NOTES:

1. FOR TERMINAL WALL AND APPROACH SLAB PARAPET SECTIONS, SEE SHEET S28.

REINFORCING BAR LIST

MARK	TYPE	REQ'D	LENGTH (FT)
TERMINAL WALL			
EP403	STR	16	7'-7½"
EP404	BENT	16	7'-10"
EP405	BENT	8	4'-5"
EP406	BENT	4	2'-8"
EP407	BENT	4	4'-0"
EP503	BENT	88	4'-5"
EP504	BENT	16	4'-5"
EP505	BENT	4	7'-0"
EP506	BENT	12	VARIES 4'-8" TO 7'-2"
APPROACH PARAPETS			
EP301	3*	76	2'-10¼"
EP402	STR	16	13'-2"
EP408	STR	16	14'-5"
EP501	4*	76	4'-6¾"
EP502	8*	76	4'-2⅛"
APPROACH MEDIAN BARRIER			
EM501	6*	62	3'-1⅝"
EM502	7*	62	6'-8¼"
EM503	8*	62	6'-9⅝"
EM505	STR	16	19'-4"

* SEE SHEET 24 FOR BENDING DIAGRAMS.

REINFORCING IN THIS TABLE IS INCLUDED IN SUPERSTRUCTURE REINFORCING STEEL BAR WEIGHT

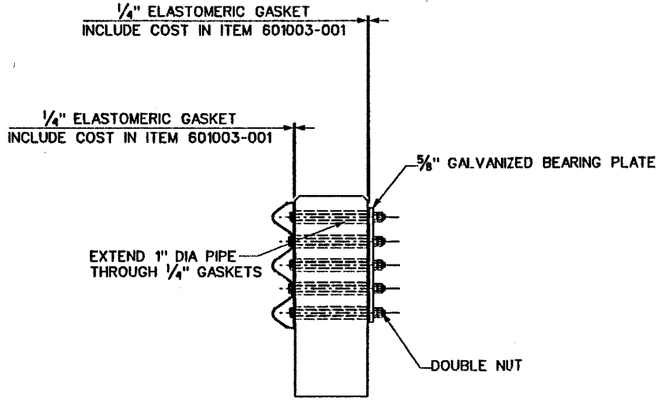

DETAIL 1

BAR BENDING DIAGRAMS

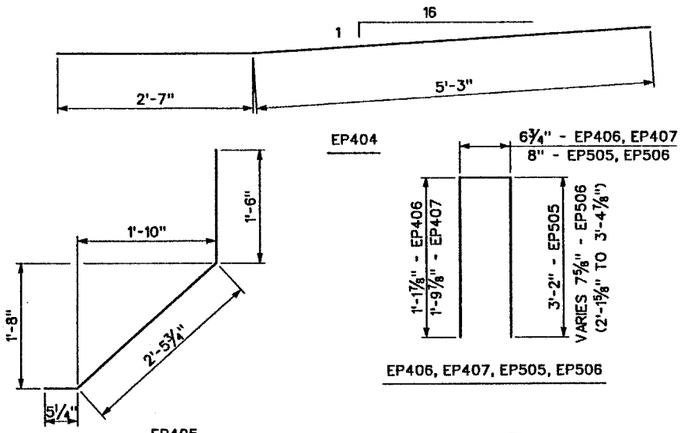

GUARDRAIL CONNECTION

CONNECT THE THREE BEAM TERMINAL PLATE AND ⅝" BEARING PLATE WITH ⅞" DIA BOLTS AND TWO NUTS. TIGHTEN FIRST NUT AGAINST BEARING PLATE AND SECOND NUT AGAINST FIRST NUT TO PREVENT NUTS FROM LOOSENING. CENTER THE BOLTS IN THE 5" X 2" TUBING.

ALL GALVANIZATION SHALL BE IN ACCORDANCE WITH AASHTO M111.

NO.	REVISION	DATE:	BY:

W. VA. DEPARTMENT OF TRANSPORTATION
DIVISION OF HIGHWAYS

ROUTE US 48
MOOREFIELD DISTRICT
FORT RUN BRIDGE
TERMINAL WALL DETAILS

	DATE
DESIGNED JDD	06/03
DRAWN JCH	06/03
CHECKED JDD	06/03
CHECKED MJ	06/03

Baker
Michael Baker Jr., Inc. Charleston, W.Va.

SHEET S29 OF S40
BRIDGE NO. 10444

10:54:08 AM 03/02
L:\proj\Corridor\...\Bridge\Fort Run\Final\Drawings\FortRun-Final-oppsleb_endpost.dgn

State Project No.	Federal Project No.	State Dist. No.	Fiscal Year	County	Sheet No.	Total Sheets
X316-H-100.40 06	APD 0484(251)C	5	2003	HARDY	307	670

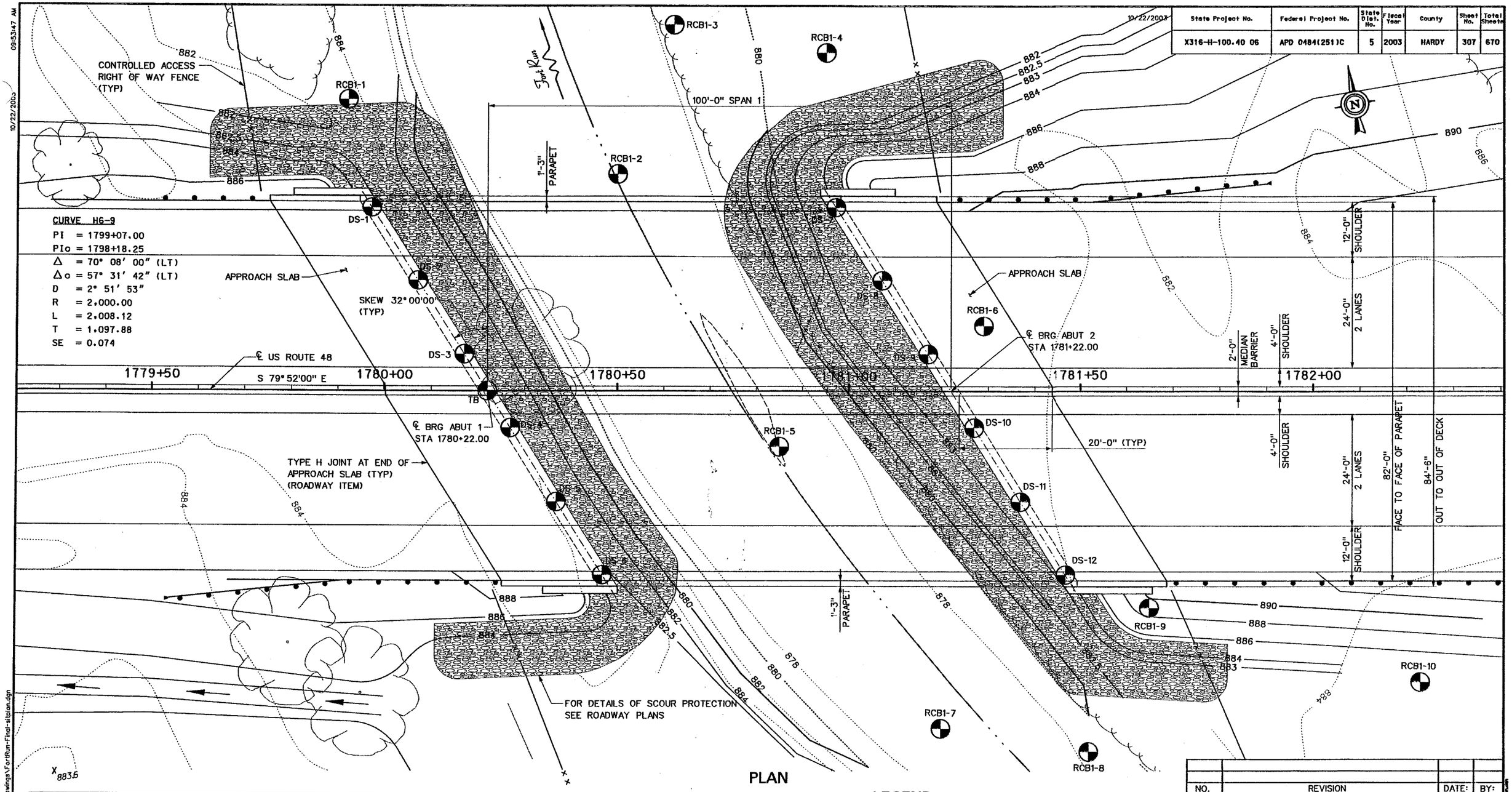

CURVE H6-9
PI = 1799+07.00
PIc = 1798+18.25
Δ = 70° 08' 00" (LT)
Δc = 57° 31' 42" (LT)
D = 2° 51' 53"
R = 2,000.00
L = 2,008.12
T = 1,097.88
SE = 0.074

PLAN

CORE BORINGS

BORING	STATION	OFFSET	NORTHING	EASTING	BORING	STATION	OFFSET	NORTHING	EASTING
DS-1	1779+97.1600	39.75 L	210522.51	2127650.85	RCB1-1	1779+92.00	63.00 L	210546.30	2127649.86
DS-2	1780+07.1000	23.85 L	210505.11	2127657.84	RCB1-2	1780+50.00	47.00 L	210520.34	2127704.14
DS-3	1780+17.0300	7.95 L	210487.71	2127664.82	RCB1-3	1780+62.00	79.00 L	210579.73	2127721.59
DS-4	1780+26.9700	7.95 R	210470.31	2127671.80	RCB1-4	1780+95.00	73.00 L	210538.02	2127753.02
DS-5	1780+36.9000	23.85 R	210452.91	2127678.78	RCB1-5	1780+85.00	12.00 R	210456.12	2127728.22
DS-6	1780+46.8400	39.75 R	210435.51	2127685.77	RCB1-6	1781+29.00	14.00 L	210473.96	2127776.11
DS-7	1780+97.1600	39.75 L	210504.91	2127749.29	RCB1-7	1781+20.00	73.00 R	210389.90	2127751.94
DS-8	1781+07.1000	23.85 L	210487.51	2127756.28	RCB1-8	1781+52.00	78.00 R	210379.35	2127782.56
DS-9	1781+17.0300	7.95 L	210470.11	2127763.26	RCB1-9	1781+65.00	47.00 R	210407.58	2127800.81
DS-10	1781+26.9700	7.95 R	210452.71	2127770.24	RCB1-10	1782+23.00	63.00 R	210381.63	2127855.09
DS-11	1781+36.9000	23.85 R	210435.31	2127777.22	TB	1780+22.00	0.00	210479.01	2127668.31
DS-12	1781+46.8400	39.75 R	210417.91	2127784.21					

DESIGN DESIGNATION	
A.D.T. (2003)	= 10,350
A.D.T. (2023)	= 18,600
D.H.V.	= 1860
D	= 60/40
T	= 10%
V	= 65MPH

LEGEND

℄ CORE BORING LOCATION (ACTUAL)

FOR RCB AND TB BORING LOGS, SEE GEOTECHNICAL REPORT

NOTES:

1. PROPOSED RIGHT OF WAY IS LOCATED APPROXIMATELY 120 FEET OFFSET FROM CENTERLINE OF CORRIDOR H. SEE ROADWAY PLANS.

SCALE : 0 10 ft.

NO.	REVISION	DATE:	BY:

W. VA. DEPARTMENT OF TRANSPORTATION
DIVISION OF HIGHWAYS

ROUTE US 48
MOOREFIELD DISTRICT
FORT RUN BRIDGE
SITUATION PLAN

DESIGNED	JD	06/03
DRAWN	JMC	06/03
CHECKED	JMC	06/03
CHECKED	AJF	06/03

Baker
Michael Baker Jr., Inc. Charleston, W.Va.

SHEET S30 OF S40
BRIDGE NO. 10444

09:53:47 AM 10/22/2003
L:\proj\Corridor H\...\Bridge\Fort Run\Final\Drawings\FortRun-Final-sitplan.dgn

					NON-COMPOSITE (GIRDER ONLY)		3n COMP FOR BENDING MOMENT (GIRDER & SLAB)		1n COMP FOR BENDING MOMENT (GIRDER & SLAB)		DEAD LOAD DESIGN MOMENT AND SHEAR				CONVERSION FACTORS (CF)		HS-20		H-20		TYPE 3		TYPE 3-S2	
SECTION LOC	tf TOP FL (IN)	bf BOT FL (IN)	Dw WEB DEPTH (IN)	tw THICKNESS (IN)	Sx TOP FL (IN^3)	Sx BOT FL (IN^3)	Sx TOP FL (IN^3)	Sx BOT FL (IN^3)	Sx TOP FL (IN^3)	Sx BOT FL (IN^3)	M DL1 MOMENT (K-FT)	V DL1 SHEAR (KIP)	M DL2 MOMENT (K-FT)	V DL2 SHEAR (KIP)	BENDING	SHEAR	M LL+I MOMENT (K-FT)	V LL+I SHEAR (KIP)	M LL+I MOMENT (K-FT)	V LL+I SHEAR (KIP)	M LL+I MOMENT (K-FT)	V LL+I SHEAR (KIP)	M LL+I MOMENT (K-FT)	V LL+I SHEAR (KIP)
A		1.500	28.00	0.500	635	717	1963	902	6918	994	0	54	0	17	0.6687	0.7934	0	81	0	71	0	58	0	73
B	1.250	1.500	28.00	0.500	635	717	1963	902	6918	994	961	30	296	9	0.6687	0.6906	1361	62	1083	48	966	43	1193	54
C	1.250	2.375	28.00	0.500	669	1035	1918	1303	5582	1439	1362	0	418	0	0.6664	0.6906	1858	38	1528	26	1340	27	1610	29
D	1.250	1.500	28.00	0.500	635	717	1963	902	6918	994	961	30	296	9	0.6687	0.6906	1361	62	1083	48	966	43	1193	54
E	1.250	1.500	28.00	0.500	635	717	1963	902	6918	994	0	54	0	17	0.6687	0.7934	0	81	0	71	0	58	0	73

GIRDERS 2 THROUGH 9, SECTION PROPERTIES					NON-COMPOSITE (GIRDER ONLY)		3n COMP FOR BENDING MOMENT (GIRDER & SLAB)		1n COMP FOR BENDING MOMENT (GIRDER & SLAB)		DEAD LOAD DESIGN MOMENT AND SHEAR				CONVERSION FACTORS (CF)		HS-20		H-20		TYPE 3		TYPE 3-S2	
SECTION LOC	tf TOP FL (IN)	bf BOT FL (IN)	Dw WEB DEPTH (IN)	tw THICKNESS (IN)	Sx TOP FL (IN^3)	Sx BOT FL (IN^3)	Sx TOP FL (IN^3)	Sx BOT FL (IN^3)	Sx TOP FL (IN^3)	Sx BOT FL (IN^3)	M DL1 MOMENT (K-FT)	V DL1 SHEAR (KIP)	M DL2 MOMENT (K-FT)	V DL2 SHEAR (KIP)	BENDING	SHEAR	M LL+I MOMENT (K-FT)	V LL+I SHEAR (KIP)	M LL+I MOMENT (K-FT)	V LL+I SHEAR (KIP)	M LL+I MOMENT (K-FT)	V LL+I SHEAR (KIP)	M LL+I MOMENT (K-FT)	V LL+I SHEAR (KIP)
A	1.250	1.500	28.00	0.500	635	717	2316	920	10013	1008	0	65	0	17	0.6107	1.0024	0	81	0	71	0	58	0	73
B	1.250	1.500	28.00	0.500	635	717	2316	920	10013	1008	1166	36	296	9	0.6306	0.8724	1361	62	1083	48	966	43	1193	54
C	1.250	2.375	28.00	0.500	669	1035	2227	1330	7308	1459	1652	0	418	0	0.6306	0.8724	1858	38	1528	26	1340	27	1610	29
D	1.250	1.500	28.00	0.500	635	717	2316	920	10013	1008	1166	36	296	9	0.6306	0.8724	1361	62	1083	48	966	43	1193	54
E	1.250	1.500	28.00	0.500	635	717	2316	920	10013	1008	0	65	0	17	0.6107	1.0024	0	81	0	71	0	58	0	73

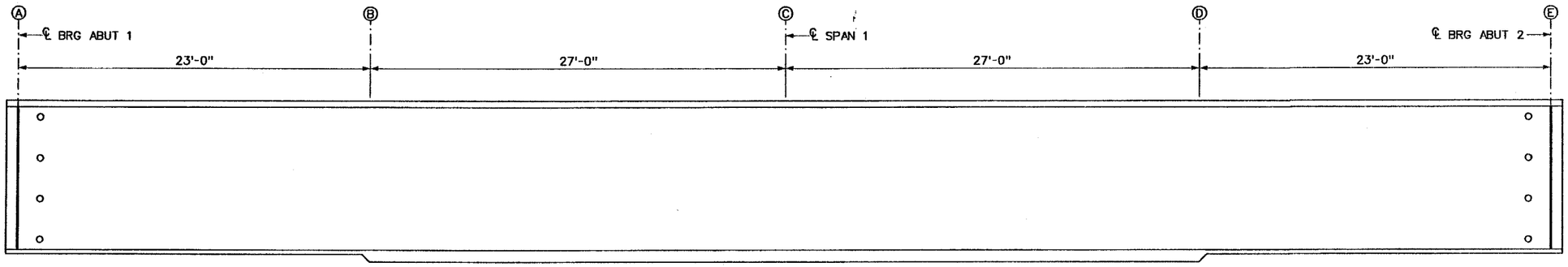

GIRDER ELEVATION G1–G10

1. IF SIGNIFICANT SECTION LOSS HAS OCCURED, RECALCULATE THE GIRDER SECTION PROPERTIES TO REFLECT THOSE LOSSES.

2. ALL FLANGES ARE 16.00 INCHES WIDE.

3. ALL STEEL HAS A YIELD STRENGTH OF 50 KSI.

4. DL1 MOMENT AND SHEAR IS DUE TO WEIGHT OF STEEL GIRDERS, DIAPHRAGMS, AND DETAILS, STRUCTURAL DECK CONCRETE, HAUNCHES AND STAY-IN-PLACE FORMS. THESE FORCE EFFECTS ARE RESISTED BY THE NON-COMPOSITE GIRDER.

5. DL2 MOMENT AND SHEAR IS DUE TO WEIGHT OF PARAPETS, MEDIAN BARRIER, AND FUTURE WEARING SURFACE. THESE FORCE EFFECTS ARE RESISTED BY THE COMPOSITE GIRDER.

6. LL+I MOMENTS AND SHEARS PROVIDED ARE CRITICAL (MAXIMUM) FORCES AT THE SPECIFIC LOCATION INDICATED. LOADS ARE SERVICE LOADS WITH A DISTRIBUTION FACTOR OF 2.0 WHEELS (1 LANE).

7. GIRDER BENDING CAPACITY IS BASED ON EQUATION 6.10.4.2.2A-2 (COMPACT SECTION) IN THE 1998 AASHTO LRFD CODE, INCLUDING THE LATEST REVISIONS.

RATING EXAMPLE:

THIS SAMPLE CALCULATION IS PERFORMED AT SECTION (C) OF GIRDER 1 FOR THE BOTTOM FLANGE.

1. OBTAIN THE INITIAL LL+I MOMENT FOR THE RATING VEHICLE USING A LINE GIRDER ANALYSIS WITH A LIVE LOAD DISTRIBUTION FACTOR = 1 LANE (= 2 WHEELS). SAY M = 1,858 FT-K.

2. CALCULATE THE EQUIVALENT FINAL 3D LL+I MOMENT USING THE CONVERSION FACTOR PROVIDED IN THE TABLE.

3. USING THE PRIMARY DEAD LOAD MOMENTS FROM THE TABLE, THE CALCULATED EQUIVALENT FINAL LIVE LOAD MOMENT FROM STEP 2 AND THE GIRDER CAPACITY PRESENTED IN THE TABLE, CALCULATE THE OPERATING AND INVENTORY RATING FACTORS AS FOLLOWS:

$$OR = \frac{C - 1.3\,M_{DL1} - 1.3\,M_{DL2}}{1.3\,(M_{LL+I})\,(CF)}$$

OR = 2.27

IR = 3/5 x (OR FACTOR)
IR = 3/5 x 2.26 = 1.36

4. CALCULATE THE RATING:

RATING = (RATING FACTOR) (G.V.W. OF RATING VEHICLE)
OR = (2.26) (36 TONS) = 81 TONS
IR = (1.36) (36 TONS) = 48 TONS

LOAD RATING TABLE (TONS)				
RATING	HS 20	H 20	TYPE 3	3-S2
OPER. (OR)	81	56	80	93
INV. (IR)	48	33	47	55

LOAD RATING FACTORS				
RATING	HS 20	H 20	TYPE 3	3-S2
OPER. (OR)	2.26	2.80	3.20	2.60
INV. (IR)	1.36	1.66	1.89	1.55

NO.	REVISION	DATE:	BY:

W. VA. DEPARTMENT OF TRANSPORTATION
DIVISION OF HIGHWAYS

ROUTE US 48
MOOREFIELD DISTRICT
FORT RUN BRIDGE
LOAD RATING TABLE

DESIGNED JSD	DATE 06/03
DRAWN JMC	06/03
CHECKED AJT	06/03
CHECKED AJT	06/03

Baker
Michael Baker Jr., Inc. Charleston, W.Va.

SHEET S31 OF S40
BRIDGE NO. 10444

09:50:46 AM 10/22/2...
L:\proj\Corridor...\Bridge\Fort Run\Final\Drawings\FortRun-Final-loadrating.dgn

Michael Baker Jr., Inc.
Corridor H, Moorefield
Fort Run Bridge
Bridge No. 10444

Abutment 1

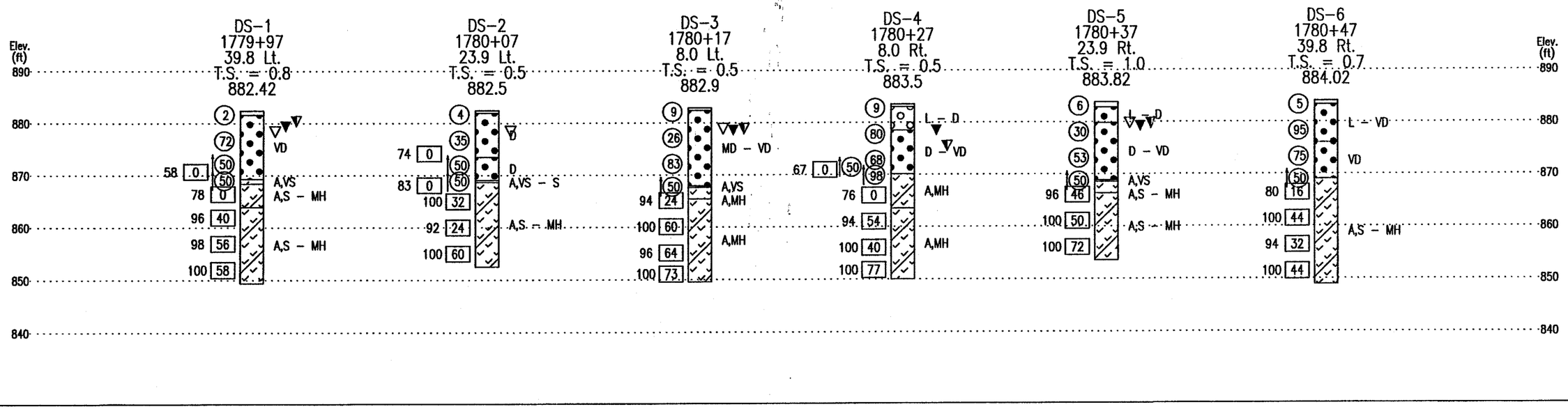

SEE CORE BORING LOGS FOR TOP AND BOTTOM OF ROCK SOCKET ELEVATIONS RELATIVE TO SUBSURFACE CONDITIONS /

MINERALOGICAL DESCRIPTION OF ROCK AND SHALE

A = ARENACEOUS (SANDY)
L = CALCAREOUS (LIMEY)
C = ARGILLACEOUS (CLAYEY)

ROCK FIELD HARDNESS

ES = EXTREMELY SOFT
VS = VERY SOFT
S = SOFT
MH = MEDIUM HARD
H = HARD
VH = VERY HARD

SOIL DENSITY

COHESIVE	SPOON BLOWS
VL = VERY LOOSE	0–4
L = LOOSE	5–10
MD = MEDIUM DENSE	11–24
D = DENSE	25–50
VD = VERY DENSE	50+

CONSISTENCY

COHESIVE	SPOON BLOWS
VS = VERY SOFT	0–1
S = SOFT	2–4
MST = MEDIUM STIFF	5–8
ST = STIFF	9–15
VST = VERY STIFF	16–30
H = HARD	31–60
VH = VERY HARD	61+

LEGEND OF SYMBOLS USED ON SOIL/ROCK PROFILE

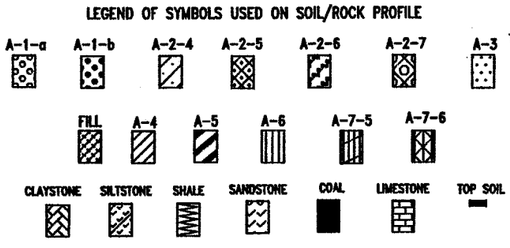

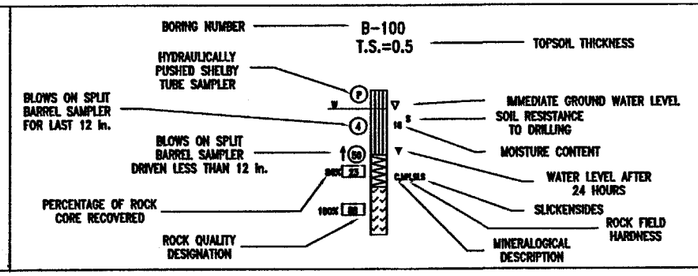

H.C. NUTTING COMPANY
APPALACHIAN REGION – 912 MORRIS STREET CHARLESTON, WEST VIRGINIA 25301 (304) 344-9021
EMPLOYEE OWNED
GEOTECHNICAL, ENVIRONMENTAL AND TESTING ENGINEERS SINCE 1921

GEOTECHNICAL DATA SUMMARY

TEST BORING DETAILS – SHEET 1 OF 2

Michael Baker Jr., Inc.
Corridor H, Section 6 Eastern Alignment
Hardy County, West Virginia

SCALE: 1" = 20'	W.O.#: 92143.016
DATE: May 2003	DWG ID: Fortrun-6-30-03

Michael Baker Jr., Inc.
Corridor H, Moorefield
Fort Run Bridge
Bridge No. 10444

Abutment 2

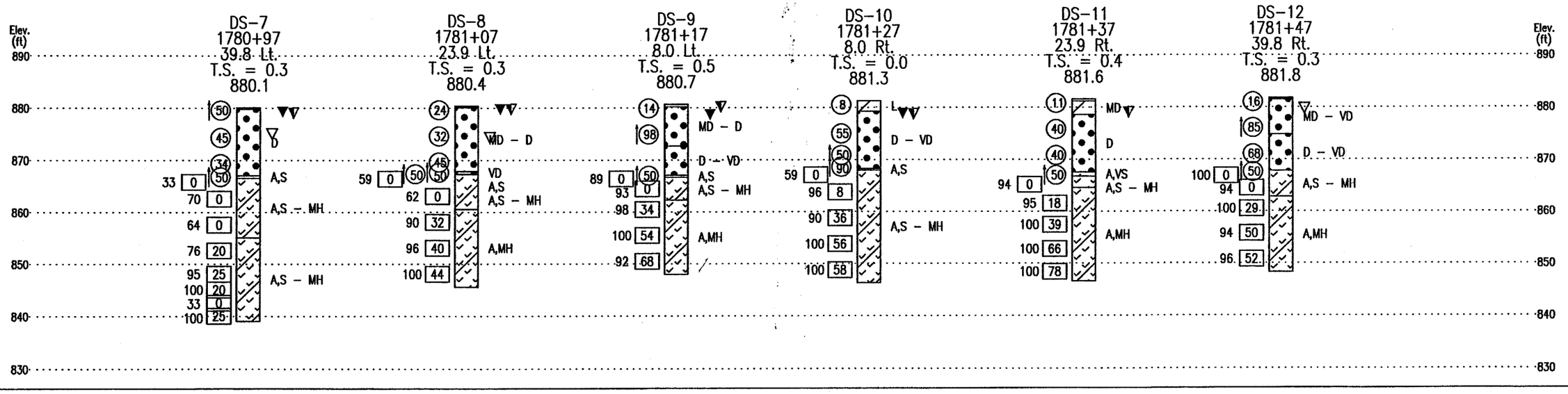

SEE CORE BORING LOGS FOR TOP AND BOTTOM OF ROCK SOCKET ELEVATIONS RELATIVE TO SUBSURFACE CONDITIONS

SHEET S33 OF S40

MINERALOGICAL DESCRIPTION OF ROCK AND SHALE

A = ARENACEOUS (SANDY)
L = CALCAREOUS (LIMEY)
C = ARGILLACEOUS (CLAYEY)

ROCK FIELD HARDNESS

ES = EXTREMELY SOFT
VS = VERY SOFT
S = SOFT
MH = MEDIUM HARD
H = HARD
VH = VERY HARD

SOIL DENSITY

COHESIVE	SPOON BLOWS
VL = VERY LOOSE	0–4
L = LOOSE	5–10
MD = MEDIUM DENSE	11–24
D = DENSE	25–50
VD = VERY DENSE	50+

CONSISTENCY

COHESIVE	SPOON BLOWS
VS = VERY SOFT	0–1
S = SOFT	2–4
MST = MEDIUM STIFF	5–8
ST = STIFF	9–15
VST = VERY STIFF	16–30
H = HARD	31–60
VH = VERY HARD	61+

LEGEND OF SYMBOLS USED ON SOIL/ROCK PROFILE

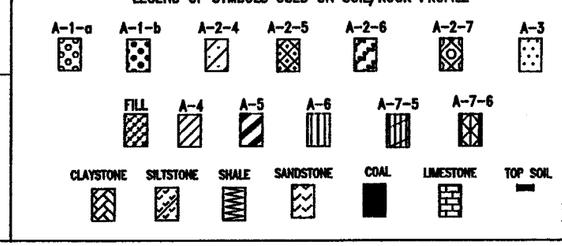

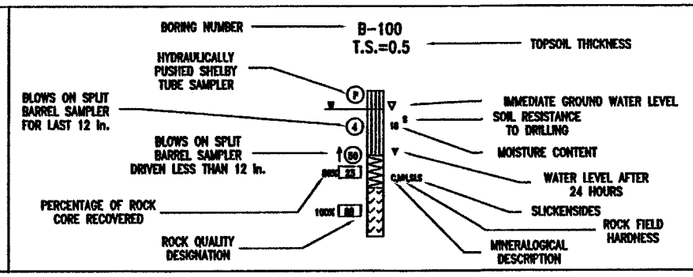

H.C. NUTTING COMPANY
GEOTECHNICAL, ENVIRONMENTAL AND TESTING ENGINEERS SINCE 1921

GEOTECHNICAL DATA SUMMARY

TEST BORING DETAILS – SHEET 2 OF 2

Michael Baker Jr., Inc.
Corridor H, Section 6 Eastern Alignment
Hardy County, West Virginia

SCALE: 1" = 20'	W.O.#: 92143.016
DATE: May 2003	DWG ID: Forlrun-6-30-03

10/22/2003	State Project No.	Federal Project No.	State Dist. No.	Fiscal Year	County	Sheet No.	Total Sheets
	X316-H-100.40 06	APD 0484(251)C	5	2003	HARDY	311	670

H.C. NUTTING COMPANY
APPALACHIAN REGION - 912 MORRIS STREET
CHARLESTON, WV 25301 (304) 344-0821
FAX (304) 342-4711

EMPLOYEE OWNED

GEOTECHNICAL, ENVIRONMENTAL AND TESTING ENGINEERS SINCE 1921

CORPORATE CENTER 611 LUNKEN PARK DRIVE CINCINNATI, OH 45226 (513) 321-5816 FAX (513) 321-0294
CENTRAL OHIO REGION 780 MORRISON ROAD COLUMBUS, OH 43230 (614) 863-3113 FAX (614) 863-0475
INDIANA REGION 349 WALNUT STREET, STE 8 LAWRENCEBURG, IN 47025 (812) 539-4300 FAX (812) 539-4301
BLUEGRASS REGION 478-B CONWAY CT., STE B-6 LEXINGTON, KY 40511 (859) 455-5530 FAX (859) 455-5830

Page 1 of 1

LOG OF TEST BORING

Clint: Michael Baker, Jr., Inc.
Project: Corridor H, Section 6 Western Alignment - Contract 2
Boring Location: Station 1779+97 Offset 39.8 Lt.
Elevation Ref.: E.L. Robinson, Inc.

Boring No.: DS-1
Date Started: 4/16/2003
Date Completed: 4/16/2003
Work Order No.: 92143.016

ELEV. ft.	DEPTH ft.	DESCRIPTION OF MATERIALS (color, material description, moisture, stiffness/density/hardness (visual classification unless otherwise noted))	NO.	TYPE	SAMPLE DEPTH ft.	BLOWS/6" (N Value)	REC. %	RQD %	W %	LL %	PI %	HCSI	PPR tsf
882.42	0.0												
881.62	0.8	0.8 Brown, TOPSOIL, trace sand, dry	1	SS	0.0-1.5	1-0-2 (2)	60						
		Brown, POORLY GRADED GRAVEL WITH CLAY AND SAND (GP-GC, A-1-b/A-2-4), saturated, very dense											
			2	SS	5.0-6.5	32-40-32 (72)	67						
		12.3											
		Cobbles and boulders from 9.0' to 12.0'	3	SS	10.0-10.4	50/0.4	75						
T = 869.32	869.32 13.1		1	NX	10.4-13.0		58	0					
868.42	14.0	0.9 Gray, SILTSTONE, laminated, completely weathered, very soft	4	SS	13.0-13.8	31-50/0.3	87						
		Gray, SILTSTONE, laminated, bedded at 60° from horizontal, jointed at 0.1' to 0.3' spacing, slightly weathered, soft - medium hard	2	NX	14.0-18.0		78	0				2	
863.92	18.5	4.5											
		Gray, SILTSTONE, laminated, jointed at 0.5' to 1.0' spacing and 60° orientation, slightly weathered, soft - medium hard	3	NX	18.0-23.0		96	40				2-3	
B = 856.0		Highly jointed from 22.2' to 23.0'											
		14.5	4	NX	23.0-28.0		98	56				2-3	
			5	NX	28.0-33.0		100	58				2-3	
849.42	33.0	BORING COMPLETED @ 33.0'											

General Notes

Driller	Bowser
Rig No.	Terry
Rig Type	Track
Method	NX/SS
Inspector	BH/NG

Remarks

Water at 5' due to water from nearby core borings.

Water Level Observations

Immediate	5.0		ft. ▽
At Completion	3.0		ft. ▽
After	24 Hrs.	4.0	ft. ▼
Water used in drilling	10.4		ft.

BF = BACKFILLED NW = NO WATER
(Measured from ground surface)

TEST BORING CORR H WEST ALIGN.GPJ HC NUTTING.GDT 6/24/03

H.C. NUTTING COMPANY
APPALACHIAN REGION - 912 MORRIS STREET
CHARLESTON, WV 25301 (304) 344-0821
FAX (304) 342-4711

EMPLOYEE OWNED

GEOTECHNICAL, ENVIRONMENTAL AND TESTING ENGINEERS SINCE 1921

CORPORATE CENTER 611 LUNKEN PARK DRIVE CINCINNATI, OH 45226 (513) 321-5816 FAX (513) 321-0294
CENTRAL OHIO REGION 780 MORRISON ROAD COLUMBUS, OH 43230 (614) 863-3113 FAX (614) 863-0475
INDIANA REGION 349 WALNUT STREET, STE 8 LAWRENCEBURG, IN 47025 (812) 539-4300 FAX (812) 539-4301
BLUEGRASS REGION 478-B CONWAY CT., STE B-6 LEXINGTON, KY 40511 (859) 455-5530 FAX (859) 455-5830

Page 1 of 1

LOG OF TEST BORING

Clint: Michael Baker, Jr., Inc.
Project: Corridor H, Section 6 Western Alignment - Contract 2
Boring Location: Station 1780+07 Offset 23.9 Lt.
Elevation Ref.: E.L. Robinson, Inc.

Boring No.: DS-2
Date Started: 4/16/2003
Date Completed: 4/16/2003
Work Order No.: 92143.016

ELEV. ft.	DEPTH ft.	DESCRIPTION OF MATERIALS (color, material description, moisture, stiffness/density/hardness (visual classification unless otherwise noted))	NO.	TYPE	SAMPLE DEPTH ft.	BLOWS/6" (N Value)	REC. %	RQD %	W %	LL %	PI %	HCSI	PPR tsf
882.50	0.0												
882.00	0.5	0.5 Brown, TOPSOIL	1	SS	0.0-1.5	2-2-2 (4)							
		Brown, CLAYEY GRAVEL WITH SAND (GC, A-1-b), boulders and cobbles throughout (rounded), saturated, dense											
		8.5	2	SS	5.0-6.5	19-16-19 (35)	67						
		Boulder from 6.6' to 8.5'	1	NX	6.6-10.0		74	0					
873.50	9.0												
		Brown, POORLY GRADED GRAVEL WITH CLAY AND SAND (GP-GC, A-1-b), cobbles throughout (rounded), saturated, dense	3	SS	10.0-11.0	16-50/0.5	80						
		4.4	2	NX	11.0-13.4								
T = 869.10	869.10 13.4												
868.70	13.8	0.4 Gray, SILTSTONE, laminated, completely weathered, very soft - soft	4	SS	13.4-13.8	50/0.4	100						
		Dk. gray, SILTSTONE, laminated, bedded at 60° from horizontal, highly jointed at 0.2' to 0.5' spacing, slightly weathered, soft - medium hard	3	NX	13.8-15.0		83	0				1-3	
			4	NX	15.0-20.0		100	32				2-3	
		16.2	5	NX	20.0-25.0		92	24				2-3	
B = 859.0			6	NX	25.0-30.0		100	60				2-3	
852.50	30.0	BORING COMPLETED @ 30.0'											

General Notes

Driller	Bowser
Rig No.	Terry
Rig Type	Track
Method	NX/SS
Inspector	BH/NG

Remarks

Water at 5.0' attributed to water from nearby borings drilled the previous day.

Water Level Observations

Immediate	5.0		ft. ▽
At Completion	CI		ft.
After	24 Hrs.	CI	ft.
Water used in drilling	6.6		ft.

BF = BACKFILLED NW = NO WATER
(Measured from ground surface)

TEST BORING CORR H WEST ALIGN.GPJ HC NUTTING.GDT 6/24/03

NO.	REVISION	DATE:	BY:

LEGEND:

T ———— = TOP OF CAISSON ROCK SOCKET
B - - - - - - - - = BOTTOM OF CAISSON ROCK SOCKET

	DATE
DESIGNED	06/03
DRAWN	06/03
CHECKED	06/03
CHECKED	06/03

W. VA. DEPARTMENT OF TRANSPORTATION
DIVISION OF HIGHWAYS

ROUTE US 48
MOOREFIELD DISTRICT
FORT RUN BRIDGE
CORE BORING LOGS
SHEET 1 OF 7

Baker
Michael Baker Jr., Inc. Charleston, W.Va.

SHEET S34 OF S40
BRIDGE NO. 10444

NW 03030

10/22/2003

L:\proj\Corridor H\...6\Bridge\Fort Run\Final\Drawings\FortRun-Final-Borlog1.dgn

10/22/2003

State Project No.	Federal Project No.	State Dist. No.	Fiscal Year	County	Sheet No.	Total Sheets
X316-H-100.40 06	APD 0484(251)C	5	2003	HARDY	312	670

09:03:30 AM

10/22/200...

H.C. NUTTING COMPANY

APPALACHIAN REGION - 912 MORRIS STREET
CHARLESTON, WV 25301 (304) 344-0821
FAX (304) 342-4711

EMPLOYEE OWNED

GEOTECHNICAL, ENVIRONMENTAL AND TESTING ENGINEERS SINCE 1921

CORPORATE CENTER — 811 LUNKEN PARK DRIVE, CINCINNATI, OH 45226, (513) 321-5816, FAX (513) 321-0294
CENTRAL OHIO REGION — 780 MORRISON ROAD, COLUMBUS, OH 43230, (614) 863-3113, FAX (614) 863-0475
INDIANA REGION — 348 WALNUT STREET, STE 8, LAWRENCEBURG, IN 47025, (812) 539-4300, FAX (812) 539-4301
BLUEGRASS REGION — 470-B CONWAY CT., STE B-8, LEXINGTON, KY 40511, (859) 455-8530, FAX (859) 455-8630

LOG OF TEST BORING

Page 1 of 1

Clint: Michael Baker, Jr., Inc.
Project: Corridor H, Section 6 Western Alignment - Contract 2
Boring Location: Station 1780+17 Offset 8.0 Lt.
Elevation Ref.: E.L. Robinson, Inc.

Boring No.: DS-3
Date Started: 4/15/2003
Date Completed: 4/15/2003
Work Order No.: 92143.016

ELEV. ft.	DEPTH ft.	DESCRIPTION OF MATERIALS (color, material description, moisture, stiffness/density/hardness (visual classification unless otherwise noted))	NO.	TYPE	SAMPLE DEPTH ft.	BLOWS/6" (N Value)	REC. %	RQD %	W %	LL %	PI %	HCSI	PPR tsf
882.90	0.0												
882.40	0.5	0.5 TOPSOIL with gravel	1	SS	0.0-1.5	5-3-6 (9)	47						
		Brown, CLAYEY GRAVEL WITH SAND (GC, A-1-b), moist - saturated, medium dense - very dense											
			2	SS	5.0-6.5	7-8-18 (26)	73						
		14.5 Boulders and cobbles (sandstone) from 9.7' to 12.0'	3	SS	10.0-11.5	48-38-45 (83)	53						
T - 867.90 867.90	15.0												
867.60	15.3	0.3 Dk. gray, SILTSTONE, laminated, completely weathred, very soft	4	SS	15.0-15.3	50/0.3	100						
865.40	17.5	2.2 Dk. gray, SILTSTONE, laminated, highly jointed at 0.2' to 0.5' spacing and 60° orientation, slightly weathered, medium hard	1	NX	15.3-20.3		94	24				3	
		Dk. gray, SILTSTONE, laminated, moderately jointed, slightly weathered, medium hard	2	NX	20.3-25.3		100	60				3	
B - 856.0		15.8	3	NX	25.3-30.3		96	64				3	
			4	NX	30.3-33.3		100	73				3	
849.60	33.3	BORING COMPLETED @ 33.3'											

General Notes

Driller	Bowser
Rig No.	Terry
Rig Type	Track
Method	NX/SS
Inspector	BH

Remarks

Water Level Observations

Immediate	5.0	ft. ▽
At Completion	5.0	ft. ▼
After 24 Hrs.	5.3	ft. ▼
Water used in drilling	15.3	ft.

BF = BACKFILLED NW = NO WATER (Measured from ground surface)

TEST BORING CORR H WEST ALIGN.GPJ HC NUTTING.GDT 6/24/03

H.C. NUTTING COMPANY

APPALACHIAN REGION - 912 MORRIS STREET
CHARLESTON, WV 25301 (304) 344-0821
FAX (304) 342-4711

EMPLOYEE OWNED

GEOTECHNICAL, ENVIRONMENTAL AND TESTING ENGINEERS SINCE 1921

CORPORATE CENTER — 811 LUNKEN PARK DRIVE, CINCINNATI, OH 45226, (513) 321-5816, FAX (513) 321-0294
CENTRAL OHIO REGION — 780 MORRISON ROAD, COLUMBUS, OH 43230, (614) 863-3113, FAX (614) 863-0475
INDIANA REGION — 348 WALNUT STREET, STE 8, LAWRENCEBURG, IN 47025, (812) 539-4300, FAX (812) 539-4301
BLUEGRASS REGION — 470-B CONWAY CT., STE B-8, LEXINGTON, KY 40511, (859) 455-8530, FAX (859) 455-8630

LOG OF TEST BORING

Page 1 of 1

Clint: Michael Baker, Jr., Inc.
Project: Corridor H, Section 6 Western Alignment - Contract 2
Boring Location: Station 1780+27 Offset 8.0 Rt.
Elevation Ref.: E.L. Robinson, Inc.

Boring No.: DS-4
Date Started: 4/15/2003
Date Completed: 4/15/2003
Work Order No.: 92143.016

ELEV. ft.	DEPTH ft.	DESCRIPTION OF MATERIALS (color, material description, moisture, stiffness/density/hardness (visual classification unless otherwise noted))	NO.	TYPE	SAMPLE DEPTH ft.	BLOWS/6" (N Value)	REC. %	RQD %	W %	LL %	PI %	HCSI	PPR tsf
883.50	0.0												
883.00	0.5	0.5 Brown, TOPSOIL with gravel	1	SS	0.0-1.5	4-4-5 (9)	47						
		Dk. brown, POORLY GRADED GRAVEL WITH SAND (GP, A-1-a), cobbles throughout, moist, loose - dense											
878.50	5.0	4.5											
		Brown, CLAYEY GRAVEL WITH SAND (GC, A-1-b), moist, dense - very dense	2	SS	5.0-6.5	30-30-50 (80)	80						
		8.4	3	SS	10.0-11.5	16-38-30 (68)	67						
		Sandstone boulder at 12' to 12.6'	4	SS	12.0-12.1	50/0.1	100	0					
			1	NX	12.1-13.0		67						
T - 870.10 870.10	13.4		5	SS	13.0-14.2	12-48-50/0.2	100						
		Dk. gray, SILTSTONE, laminated, very highly jointed at 0.2' spacing and 60° orientation, slightly weathered, medium hard											
		6.6 Vertically jointed at 16' to 17.5'	2	NX	15.0-20.0		76	0				3	
863.50	20.0												
		Dk. gray, SILTSTONE, laminated, moderately jointed at 0.5' to 1.0' spacing, slickensided surfaces present along joints, slightly weathered, medium hard	3	NX	20.0-25.0		94	54				3	
		Highly fractured at 24.5' to 28.5'											
B - 855.0		Quartz veins at 25.5' 13.5	4	NX	25.0-30.0		100	40				3	
			5	NX	30.0-33.5		100	77				3	
850.00	33.5	BORING COMPLETED @ 33.5'											

General Notes

Driller	Bowser
Rig No.	Terry
Rig Type	Track
Method	NX/SS
Inspector	BH

Remarks

Water Level Observations

Immediate	NW	ft.
At Completion	9.0	ft. ▼
After 24 Hrs.	6.0	ft. ▼
Water used in drilling	12.1	ft.

BF = BACKFILLED NW = NO WATER (Measured from ground surface)

TEST BORING CORR H WEST ALIGN.GPJ HC NUTTING.GDT 6/24/03

LEGEND:

T ———— - TOP OF CAISSON ROCK SOCKET
B ---------- - BOTTOM OF CAISSON ROCK SOCKET

NO.	REVISION	DATE:	BY:

		DATE
DESIGNED		06/03
DRAWN		06/03
CHECKED		06/03
CHECKED		06/03

W. VA. DEPARTMENT OF TRANSPORTATION
DIVISION OF HIGHWAYS

ROUTE US 48
MOOREFIELD DISTRICT
FORT RUN BRIDGE
CORE BORING LOGS
SHEET 2 OF 7

Baker
Michael Baker Jr., Inc. Charleston, W.Va.

SHEET S35 OF S40
BRIDGE NO. 10444

L:\proj\Corridor H\...\Bridge\Fort Run\Final\Drawings\FortRun-Final-Boring2.dgn

State Project No.	Federal Project No.	State Dist. No.	Fiscal Year	County	Sheet No.	Total Sheets
X316-H-100.40 06	APD 0484(251)C	5	2003	HARDY	313	670

H.C. NUTTING COMPANY
APPALACHIAN REGION - 912 MORRIS STREET
CHARLESTON, WV 25301 (304) 344-0821
FAX (304) 342-4711
EMPLOYEE OWNED
GEOTECHNICAL, ENVIRONMENTAL AND TESTING ENGINEERS SINCE 1921

CORPORATE CENTER 811 LUNKEN PARK DRIVE CINCINNATI, OH 45226 (513) 321-5816 FAX (513) 321-0294
CENTRAL OHIO REGION 790 MORRISON ROAD COLUMBUS, OH 43230 (614) 863-3113 FAX (614) 863-0475
INDIANA REGION 348 WALNUT STREET, STE 8 LAWRENCEBURG, IN 47025 (812) 539-4300 FAX (812) 539-4301
BLUEGRASS REGION 470-B CONWAY CT., STE B-5 LEXINGTON, KY 40511 (859) 455-8530 FAX (859) 455-8530

Page 1 of 1

LOG OF TEST BORING

Clint: Michael Baker, Jr., Inc.
Project: Corridor H, Section 6 Western Alignment - Contract 2
Boring Location: Station 1780+37 Offset 23.9 Rt.
Elevation Ref.: E.L. Robinson, Inc.

Boring No.: DS-5
Date Started: 4/16/2003
Date Completed: 4/16/2003
Work Order No.: 92143.016

ELEV. ft.	DEPTH ft.	DESCRIPTION OF MATERIALS (color, material description, moisture, stiffness/density/hardness (visual classification unless otherwise noted))	NO.	TYPE	SAMPLE DEPTH ft.	BLOWS/6" (N Value)	REC. %	RQD %	W %	LL %	PI %	HCSI	PPR tsf
883.82	0.0												
	1.0	Brown, TOPSOIL	1	SS	0.0-1.5	3-3-3 (6)	7						
882.82		Brown, POORLY GRADED GRAVEL WITH SAND (GP, A-1-b), saturated, loose - dense											
	3.0												
879.82	4.0	Brown, POORLY GRADED GRAVEL WITH SAND (GP, A-1-b), moist - very moist, dense - very dense	2	SS	5.0-6.5	12-13-17 (30)	47						
	11.0		3	SS	10.0-11.5	18-28-25 (53)	33						
T - 868.82													
868.82	15.0												
868.52	15.3	0.3 Gray, SILTSTONE, laminated, completely weathered, very soft	4	SS	15.0-15.3	50/0.3	100						
	2.2	Gray, SILTSTONE, laminated, bedded at 60°, jointed at 0.4' spacing, slightly weathered, soft - medium hard	1	NX	15.3-20.3		96	46				2-3	
866.32	17.5	Gray, SILTSTONE, laminated, bedded at 60°, jointed at 30° and 0.3' to 1.2' spacing, slightly weathered, soft - medium hard	2	NX	20.3-25.3		100	50				2-3	
B - 860.0													
	12.8		3	NX	25.3-30.3		100	72				2-3	
853.52	30.3	BORING COMPLETED @ 30.3'											

General Notes
Driller: Bowser
Rig No.: Terry
Rig Type: Track
Method: NX/SS
Inspector: BH

Remarks

Water Level Observations
Immediate 5.0 ft. ▽
At Completion 5.0 ft. ▼
After 24 Hrs. 5.6 ft. ▼
Water used in drilling 15.3 ft.
BF = BACKFILLED NW = NO WATER
(Measured from ground surface)

H.C. NUTTING COMPANY
APPALACHIAN REGION - 912 MORRIS STREET
CHARLESTON, WV 25301 (304) 344-0821
FAX (304) 342-4711
EMPLOYEE OWNED
GEOTECHNICAL, ENVIRONMENTAL AND TESTING ENGINEERS SINCE 1921

CORPORATE CENTER 811 LUNKEN PARK DRIVE CINCINNATI, OH 45226 (513) 321-5816 FAX (513) 321-0294
CENTRAL OHIO REGION 790 MORRISON ROAD COLUMBUS, OH 43230 (614) 863-3113 FAX (614) 863-0475
INDIANA REGION 348 WALNUT STREET, STE 8 LAWRENCEBURG, IN 47025 (812) 539-4300 FAX (812) 539-4301
BLUEGRASS REGION 470-B CONWAY CT., STE B-5 LEXINGTON, KY 40511 (859) 455-8530 FAX (859) 455-8530

Page 1 of 2

LOG OF TEST BORING

Clint: Michael Baker, Jr., Inc.
Project: Corridor H, Section 6 Western Alignment - Contract 2
Boring Location: Station 1780+47 Offset 39.8 Rt.
Elevation Ref.: E.L. Robinson, Inc.

Boring No.: DS-6
Date Started: 4/17/2003
Date Completed: 4/17/2003
Work Order No.: 92143.016

ELEV. ft.	DEPTH ft.	DESCRIPTION OF MATERIALS (color, material description, moisture, stiffness/density/hardness (visual classification unless otherwise noted))	NO.	TYPE	SAMPLE DEPTH ft.	BLOWS/6" (N Value)	REC. %	RQD %	W %	LL %	PI %	HCSI	PPR tsf
884.02	0.0												
883.32	0.7	Brown, TOPSOIL with gravel	1	SS	0.0-1.5	3-2-3 (5)	13						
	7.3	Gray and brown, POORLY GRADED GRAVEL WITH SAND (GP, A-1-b), angular, moist, loose - very dense	2	SS	5.0-6.5	35-45-50 (95)	27						
876.02	8.0	Brown and gray, CLAYEY GRAVEL WITH SAND (GC, A-1-b), rounded, moist, very dense	3	SS	10.0-11.5	42-25-50 (75)	47						
	7.0												
T - 869.02													
869.02	15.0												
		Gray, SILTSTONE, laminated, jointed at 0.1' to 0.5' spacing, oriented at 60° and 30°, slightly weathered, soft - medium hard	4	SS	15.0-15.1	50/0.1	100						
			1	NX	15.1-20.1		80	16				2-3	
		Highly jointed from 18' to 20.1'	2	NX	20.1-25.1		100	44				2-3	
	20.1		3	NX	25.1-30.1		94	32				2-3	
B - 856.0													
			4	NX	30.1-35.1		100	44				2-3	
848.92	35.1												

General Notes
Driller: Bowser
Rig No.: Terry
Rig Type: Track
Method: NX/SS
Inspector: BH/NG

Remarks

Water Level Observations
Immediate NW ft.
At Completion Cl ft.
After 24 Hrs. Cl ft.
Water used in drilling 15.1 ft.
BF = BACKFILLED NW = NO WATER
(Measured from ground surface)

TEST BORING CORR H WEST ALIGN.GPJ HC_NUTTING.GDT 9/24/03

LEGEND:

T ———— = TOP OF CAISSON ROCK SOCKET
B - - - - - - - - = BOTTOM OF CAISSON ROCK SOCKET

NO.	REVISION	DATE:	BY:

DESIGNED	DATE	06/03
DRAWN		06/03
CHECKED		06/03
CHECKED		06/03

W. VA. DEPARTMENT OF TRANSPORTATION
DIVISION OF HIGHWAYS

ROUTE US 48
MOOREFIELD DISTRICT
FORT RUN BRIDGE
CORE BORING LOGS
SHEET 3 OF 7

Baker
Michael Baker Jr., Inc. Charleston, W.Va.

SHEET S36 OF S40
BRIDGE NO. 10444

L:\proj\Corridor H\...\Bridge\Fort Run\Final\Drawings\FortRun-Final-Boring3.dgn

10/22/2003

State Project No.	Federal Project No.	State Dist. No.	Fiscal Year	County	Sheet No.	Total Sheets
X316-H-100.40 06	APD 0484(251)C	5	2003	HARDY	314	670

H.C. NUTTING COMPANY
APPALACHIAN REGION - 912 MORRIS STREET
CHARLESTON, WV 25301 (304) 344-0821
FAX (304) 342-4711
EMPLOYEE OWNED
GEOTECHNICAL, ENVIRONMENTAL AND TESTING ENGINEERS SINCE 1921

CORPORATE CENTER 611 LUNKEN PARK DRIVE CINCINNATI, OH 45226 (513) 321-5816 FAX (513) 321-0294
CENTRAL OHIO REGION 790 MORRISON ROAD COLUMBUS, OH 43230 (614) 863-3113 FAX (614) 863-0475
INDIANA REGION 349 WALNUT STREET, STE 8 LAWRENCEBURG, IN 47025 (812) 539-4300 FAX (812) 539-4301
BLUEGRASS REGION 470-B CONWAY CT., STE B-8 LEXINGTON, KY 40511 (859) 455-8530 FAX (859) 455-8530

LOG OF TEST BORING

Clint: Michael Baker, Jr., Inc.
Project: Corridor H, Section 6 Western Alignment - Contract 2
Boring Location: Station 1780+47 Offset 39.8 Rt.
Elevation Ref.: E.L. Robinson, Inc.
Boring No.: DS-6
Date Started: 4/17/2003
Date Completed: 4/17/2003
Work Order No.: 92143.016

ELEV. ft.	DEPTH ft.	DESCRIPTION OF MATERIALS color, material description, moisture, stiffness/density/hardness (visual classification unless otherwise noted)	SAMPLE NO.	TYPE	DEPTH ft.	BLOWS/6" (N Value)	REC. %	RQD %	W %	LL %	PI %	HCSI	PPR tsf
		BORING COMPLETED @ 35.1'											

General Notes
Driller: Bowser
Rig No.: Terry
Rig Type: Track
Method: NX/SS
Inspector: BH/NG

Remarks

Water Level Observations
Immediate: NW ft.
At Completion: CI ft.
After: 24 Hrs. CI ft.
Water used in drilling: 15.1 ft.
BF = BACKFILLED NW = NO WATER
(Measured from ground surface)

TEST BORING CORR H WEST ALIGN.GPJ HC NUTTING.GDT 6/24/03

H.C. NUTTING COMPANY
APPALACHIAN REGION - 912 MORRIS STREET
CHARLESTON, WV 25301 (304) 344-0821
FAX (304) 342-4711
EMPLOYEE OWNED
GEOTECHNICAL, ENVIRONMENTAL AND TESTING ENGINEERS SINCE 1921

CORPORATE CENTER 611 LUNKEN PARK DRIVE CINCINNATI, OH 45226 (513) 321-5816 FAX (513) 321-0294
CENTRAL OHIO REGION 790 MORRISON ROAD COLUMBUS, OH 43230 (614) 863-3113 FAX (614) 863-0475
INDIANA REGION 349 WALNUT STREET, STE 8 LAWRENCEBURG, IN 47025 (812) 539-4300 FAX (812) 539-4301
BLUEGRASS REGION 470-B CONWAY CT., STE B-8 LEXINGTON, KY 40511 (859) 455-8530 FAX (859) 455-8530

LOG OF TEST BORING

Clint: Michael Baker, Jr., Inc.
Project: Corridor H, Section 6 Western Alignment - Contract 2
Boring Location: Station 1780+97 Offset 39.8 Lt.
Elevation Ref.: E.L. Robinson, Inc.
Boring No.: DS-7
Date Started: 4/22/2003
Date Completed: 4/22/2003
Work Order No.: 92143.016

ELEV. ft.	DEPTH ft.	DESCRIPTION OF MATERIALS color, material description, moisture, stiffness/density/hardness (visual classification unless otherwise noted)	SAMPLE NO.	TYPE	DEPTH ft.	BLOWS/6" (N Value)	REC. %	RQD %	W %	LL %	PI %	HCSI	PPR tsf
880.10	0.0												
879.80	0.3	0.3 Brown, gravelly TOPSOIL with sand	1	SS	0.0-1.0	14-50/0.4	50						
		Brown, CLAYEY GRAVEL WITH SAND (GC, A-1-b), moist - saturated, dense											
		12.7	2	SS	5.0-6.5	15-20-25 (45)	40						
			3	SS	10.0-11.5	14-16-18 (34)	53						
T - 867.10	867.10	13.0											
	866.60	13.5 0.5 Gray, SILTSTONE, laminated, completely weathered, soft	4	SS	13.0-13.5	50/0.5	80						
		Gray, SILTSTONE, laminated, highly jointed (0.1' to 0.3' spacing, 60°), slightly weathered, soft - medium hard	1	NX	13.5-15.0		33	0				2	
		11.5	2	NX	15.0-20.0		70	0				2	
			3	NX	20.0-25.0		64	0				2	
	855.10	25.0 Gray, SILTSTONE, laminated, jointed (0.3' to 0.5' spacing, 60°), slightly weathered, soft - medium hard	4	NX	25.0-30.0		76	20				2-3	
B - 847.0		16.0	5	NX	30.0-34.0		95	25				2-3	

General Notes
Driller: Bowser
Rig No.: Terry
Rig Type: Track
Method: NX/SS
Inspector: BH

Remarks
Drilled on stake at location on gravelly/bouldery point bar adjacent to Fort Run.

Water Level Observations
Immediate: 6.0 ft. ▽
At Completion: 2.0 ft. ▼
After: 24 Hrs. 1.8 ft. ▼
Water used in drilling: 13.5 ft.
BF = BACKFILLED NW = NO WATER
(Measured from ground surface)

TEST BORING CORR H WEST ALIGN.GPJ HC NUTTING.GDT 6/24/03

LEGEND:
T ———— - TOP OF CAISSON ROCK SOCKET
B -------- - BOTTOM OF CAISSON ROCK SOCKET

NO.	REVISION	DATE:	BY:

W. VA. DEPARTMENT OF TRANSPORTATION
DIVISION OF HIGHWAYS

ROUTE US 48
MOOREFIELD DISTRICT
FORT RUN BRIDGE
CORE BORING LOGS
SHEET 4 OF 7

DESIGNED	DATE
	06/03
DRAWN	06/03
CHECKED	06/03
CHECKED	06/03

Baker
Michael Baker Jr., Inc. Charleston, W.Va.

SHEET S37 OF S40
BRIDGE NO. 10444

09:04:36 AM 10/22/20..
L:\proj\Corridor\...\Bridge\Fort Run\Final\Drawings\Fort Run-Final-Borlog4.dgn

H.C. NUTTING COMPANY
APPALACHIAN REGION - 912 MORRIS STREET
CHARLESTON, WV 25301 (304) 344-0821
FAX (304) 342-4711
EMPLOYEE OWNED
GEOTECHNICAL, ENVIRONMENTAL AND TESTING ENGINEERS SINCE 1921
CORPORATE CENTER 611 LUNKEN PARK DRIVE CINCINNATI, OH 45226 (513) 321-5816 FAX (513) 321-0294
CENTRAL OHIO REGION 790 MORRISON ROAD COLUMBUS, OH 43230 (614) 863-3113 FAX (614) 863-0475
INDIANA REGION 348 WALNUT STREET, STE 8 LAWRENCEBURG, IN 47025 (812) 539-4300 FAX (812) 539-4301
BLUEGRASS REGION 470-B CONWAY CT., STE B-8 LEXINGTON, KY 40511 (859) 455-8530 FAX (859) 455-8630

LOG OF TEST BORING

Clint: Michael Baker, Jr., Inc.
Project: Corridor H, Section 6 Western Alignment - Contract 2
Boring Location: Station 1780+97 Offset 39.8 Lt.
Elevation Ref.: E.L. Robinson, Inc.
Boring No.: **DS-7**
Date Started: 4/22/2003
Date Completed: 4/22/2003
Work Order No.: 92143.016

ELEV. ft.	DEPTH ft.	DESCRIPTION OF MATERIALS color, material description, moisture, stiffness/density/hardness (visual classification unless otherwise noted)	SAMPLE NO.	TYPE	DEPTH ft.	BLOWS/6" (N Value)	REC. %	RQD %	W %	LL %	PI %	HCSI	PPR tsf
		Gray, SILTSTONE, laminated, jointed (0.3' to 0.5' spacing, 60°), slightly weathered, soft - medium hard ***(LAYER CONTINUED DESCRIPTION REPEATED)***	6	NX	34.0-36.0		100	20				2-3	
			7	NX	36.0-39.0		33	0				2-3	
839.10	41.0		8	NX	39.0-41.0		100	25				2-3	
		BORING COMPLETED @ 41.0'											

General Notes
Driller: Bowser
Rig No.: Terry
Rig Type: Track
Method: NX/SS
Inspector: BH

Remarks
Drilled on stake at location on gravelly/bouldery point bar adjacent to Fort Run.

Water Level Observations
Immediate 6.0 ft. ▽
At Completion 2.0 ft. ▼
After 24 Hrs. 1.8 ft. ▼
Water used in drilling 13.5 ft.
BF = BACKFILLED NW = NO WATER
(Measured from ground surface)

TEST BORING CORR H WEST ALIGN.GPJ HC NUTTING.GDT 6/24/03

H.C. NUTTING COMPANY
APPALACHIAN REGION - 912 MORRIS STREET
CHARLESTON, WV 25301 (304) 344-0821
FAX (304) 342-4711

LOG OF TEST BORING

Clint: Michael Baker, Jr., Inc.
Project: Corridor H, Section 6 Western Alignment - Contract 2
Boring Location: Station 1781+07 Offset 23.9 Lt.
Elevation Ref.: E.L. Robinson, Inc.
Boring No.: **DS-8**
Date Started: 4/22/2003
Date Completed: 4/22/2003
Work Order No.: 92143.016

ELEV. ft.	DEPTH ft.	DESCRIPTION OF MATERIALS color, material description, moisture, stiffness/density/hardness (visual classification unless otherwise noted)	SAMPLE NO.	TYPE	DEPTH ft.	BLOWS/6" (N Value)	REC. %	RQD %	W %	LL %	PI %	HCSI	PPR tsf
880.40	0.0												
880.10	0.3	0.3 Brown, gravelly TOPSOIL with sand	1	SS	0.0-1.5	15-10-14 (24)	20						
		12.2 Brown, CLAYEY GRAVEL WITH SAND (GC, A-1-b), rounded, moist - saturated, medium dense - dense	2	SS	5.0-6.5	18-16-16 (32)	80						
867.90	12.5		3	SS	10.0-11.5	40-20-25 (45)	40						
867.40	13.0	0.5 Brown, POORLY GRADED GRAVEL WITH SAND (GP, A-1-b), saturated, very dense	4	SS	12.5-12.9	50/0.4	100						
867.30	13.1	0.1 Gray, SILTSTONE, laminated, completely weathered, soft	5	SS	12.9-13.1	50/0.2	100						
			1	NX	13.1-14.8		59	0				2-3	
860.60	19.8	6.7 Gray, SILTSTONE, laminated, highly jointed (0.5' spacing, 60°), slightly weathered, soft - medium hard	2	NX	14.8-19.8		62	0				2-3	
		15.0 Gray, SILTSTONE, laminated, jointed (0.3' to 1.0' spacing, 60°), slightly weathered, medium hard	3	NX	19.8-24.8		90	32				3	
			4	NX	24.8-29.8		96	40				3	
845.60	34.8		5	NX	29.8-34.8		100	44				3	

T - 867.40
B - 852.0

BORING COMPLETED @ 34.8'

General Notes
Driller: Bowser
Rig No.: Terry
Rig Type: Track
Method: NX/SS
Inspector: BH

Remarks
Boring located on gravel and boulder filled point bar adjacent to Fort Run.

Water Level Observations
Immediate 7.0 ft. ▽
At Completion 1.6 ft. ▼
After 24 Hrs. 1.6 ft. ▼
Water used in drilling 13.1 ft.
BF = BACKFILLED NW = NO WATER
(Measured from ground surface)

TEST BORING CORR H WEST ALIGN.GPJ HC NUTTING.GDT 6/24/03

LEGEND:

T ———— - TOP OF CAISSON ROCK SOCKET
B - - - - - - BOTTOM OF CAISSON ROCK SOCKET

NO.	REVISION	DATE:	BY:

	DATE
DESIGNED	06/03
DRAWN	06/03
CHECKED	06/03
CHECKED	06/03

W. VA. DEPARTMENT OF TRANSPORTATION
DIVISION OF HIGHWAYS

ROUTE US 48
MOOREFIELD DISTRICT
FORT RUN BRIDGE
CORE BORING LOGS
SHEET 5 OF 7

Baker
Michael Baker Jr., Inc. Charleston, W.Va.

SHEET S38 OF S40
BRIDGE NO. 10444

09:05:14 AM 10/22/2003
L:\proj\Corridor...t6\Bridge\Fort Run\Final\Drawings\FortRun-Final-Borlog5.dgn

10/22/2003

State Project No.	Federal Project No.	State Dist. No.	Fiscal Year	County	Sheet No.	Total Sheets
X316-H-100.40 06	APD 0484(251)C	5	2003	HARDY	316	670

H.C. NUTTING COMPANY
APPALACHIAN REGION - 912 MORRIS STREET
CHARLESTON, WV 25301 (304) 344-0821
FAX (304) 342-4711
EMPLOYEE OWNED
GEOTECHNICAL, ENVIRONMENTAL AND TESTING ENGINEERS SINCE 1921

CORPORATE CENTER 811 LUNKEN PARK DRIVE CINCINNATI, OH 45226 (513) 321-5816 FAX (513) 321-0294
CENTRAL OHIO REGION 780 MORRISON ROAD COLUMBUS, OH 43230 (614) 863-3113 FAX (614) 863-0475
INDIANA REGION 349 WALNUT STREET, STE B LAWRENCEBURG, IN 47025 (812) 539-4700 FAX (812) 539-4301
BLUEGRASS REGION 470-B CONWAY CT., STE B-B LEXINGTON, KY 40511 (859) 455-8530 FAX (859) 455-8630

Page 1 of 1

LOG OF TEST BORING

Clint: Michael Baker, Jr., Inc.
Project: Corridor H, Section 6 Western Alignment - Contract 2
Boring Location: Station 1781+17 Offset 8.0 Lt.
Elevation Ref.: E.L. Robinson, Inc.

Boring No.: DS-9
Date Started: 4/23/2003
Date Completed: 4/23/2003
Work Order No.: 92143.016

ELEV. ft.	DEPTH ft.	DESCRIPTION OF MATERIALS (color, material description, moisture, stiffness/density/hardness (visual classification unless otherwise noted))	NO.	TYPE	SAMPLE DEPTH ft.	BLOWS/6" (N Value)	REC. %	RQD %	W %	LL %	PI %	HCSI	PPR tsf
880.70	0.0												
880.20	0.5	0.5 Brown, gravelly TOPSOIL with sand	1	SS	0.0-1.5	4-6-8 (14)	33						
		Brown, POORLY GRADED GRAVEL WITH CLAY AND SAND (GP-GC, A-1-b), dry, medium dense - dense											
		7.5 Cobbles throughout	2	SS	5.0-6.5	30-48-50/0.2	33						
872.70	8.0												
		Brown, POORLY GRADED GRAVEL WITH SAND (GP, A-1-b), dry, dense - very dense											
		5.6											
T = 867.10													
867.10	13.6												
866.70	14.0	0.4 Gray, SILTSTONE, laminated, completely weathered, soft	3	SS	13.5-13.8	50/0.3	100					2-3	
			1	NX	13.8-14.7		89	0					
		Gray, SILTSTONE, laminated, highly jointed (0.1' spacing, 60°), slightly weathered, soft - medium hard	2	NX	14.7-17.7		93	0				2-3	
862.30	18.4												
		Gray, SILTSTONE, laminated, jointed (0.3' to 1.0' spacing, 60°), slightly weathered, medium hard	3	NX	17.7-22.7		98	34				2-3	
			4	NX	22.7-27.7		100	54				3	
B = 854.0		14.3											
			5	NX	27.7-32.7		92	68				3	
848.00	32.7	BORING COMPLETED @ 32.7'											

General Notes
Driller: Bowser
Rig No.: Terry
Rig Type: Track
Method: NX/SS
Inspector: BH

Remarks
Boring located on gravel and boulder filled point bar adjacent to Fort Run.

Water Level Observations
Immediate: NW ft.
At Completion: 1.5 ft. ▽
After: 24 Hrs. 3.0 ft. ▼
Water used in drilling: 13.8 ft.
BF = BACKFILLED NW = NO WATER
(Measured from ground surface)

H.C. NUTTING COMPANY
APPALACHIAN REGION - 912 MORRIS STREET
CHARLESTON, WV 25301 (304) 344-0821
FAX (304) 342-4711
EMPLOYEE OWNED
GEOTECHNICAL, ENVIRONMENTAL AND TESTING ENGINEERS SINCE 1921

CORPORATE CENTER 811 LUNKEN PARK DRIVE CINCINNATI, OH 45226 (513) 321-5816 FAX (513) 321-0294
CENTRAL OHIO REGION 780 MORRISON ROAD COLUMBUS, OH 43230 (614) 863-3113 FAX (614) 863-0475
INDIANA REGION 349 WALNUT STREET, STE B LAWRENCEBURG, IN 47025 (812) 539-4700 FAX (812) 539-4301
BLUEGRASS REGION 470 B CONWAY CT., STE B-B LEXINGTON, KY 40511 (859) 455-8530 FAX (859) 455-8630

Page 1 of 1

LOG OF TEST BORING

Clint: Michael Baker, Jr., Inc.
Project: Corridor H, Section 6 Western Alignment - Contract 2
Boring Location: Station 1781+27 Offset 8.0 Rt.
Elevation Ref.: E.L. Robinson, Inc.

Boring No.: DS-10
Date Started: 4/18/2003
Date Completed: 4/18/2003
Work Order No.: 92143.016

ELEV. ft.	DEPTH ft.	DESCRIPTION OF MATERIALS (color, material description, moisture, stiffness/density/hardness (visual classification unless otherwise noted))	NO.	TYPE	SAMPLE DEPTH ft.	BLOWS/6" (N Value)	REC. %	RQD %	W %	LL %	PI %	HCSI	PPR tsf
881.30	0.0												
		2.0 Brown, SILTY SAND WITH GRAVEL (SM, A-2-4), trace organics, dry, loose	1	SS	0.0-1.5	3-4-4 (8)	33						
879.30	2.0												
		Brown, POORLY GRADED GRAVEL WITH CLAY AND SAND (GP-GC, A-1-b), saturated, dense - very dense											
		Cobbles throughout	2	SS	5.5-7.0	18-20-35 (55)	40						
		11.0											
			3	SS	10.0-10.8	38-50/0.3	38						
T = 868.30													
868.30	13.0		4	SS	12.0-13.3	26-40-50/0.3	46						
868.00	13.3	0.3 Dk. gray, SILTSTONE, completely weathered, soft	1	NX	13.3-15.0		59	0				2-3	
		Gray, SILTSTONE, laminated, highly jointed (60°, 30°), slightly weathered, soft - medium hard											
			2	NX	15.0-20.0		96	3				3	
			3	NX	20.0-25.0		90	56				2-3	
B = 854.0		21.7											
			4	NX	25.0-30.0		100	56				2-3	
			5	NX	30.0-35.0		100	58				2-3	
846.30	35.0	BORING COMPLETED @ 35.0'											

General Notes
Driller: Bowser
Rig No.: Terry
Rig Type: Track
Method: NX/SS
Inspector: BH

Remarks
Boring located on gravel and boulder filled point bar adjacent to Fort Run.

Water Level Observations
Immediate: - ft.
At Completion: 3.5 ft. ▽
After: 24 Hrs. 3.4 ft. ▼
Water used in drilling: 1.5 ft.
BF = BACKFILLED NW = NO WATER
(Measured from ground surface)

NO.	REVISION	DATE:	BY:

LEGEND:

T ———— - TOP OF CAISSON ROCK SOCKET
B ———— - BOTTOM OF CAISSON ROCK SOCKET

	DATE
DESIGNED	06/03
DRAWN	06/03
CHECKED	06/03
CHECKED	06/03

W. VA. DEPARTMENT OF TRANSPORTATION
DIVISION OF HIGHWAYS

ROUTE US 48
MOOREFIELD DISTRICT
FORT RUN BRIDGE
CORE BORING LOGS
SHEET 6 OF 7

Baker
Michael Baker Jr., Inc. Charleston, W.Va.

SHEET S39 OF S40
BRIDGE NO. 10444

09:05:41 AM 10/22/2003
L:\proj\Corridor H\...\Bridge\Fort Run\Find\Drawings\FortRun-Find-Boring6.dgn
TEST BORING CORR H WEST ALIGN.GPJ HC NUTTING.GDT 6/24/03

09:06:06 AM
10/22/200_

10/22/2003

State Project No.	Federal Project No.	State Dist. No.	Fiscal Year	County	Sheet No.	Total Sheets
X316-H-100.40 06	APD 0484(251)C	5	2003	HARDY	317	670

H.C. NUTTING COMPANY

APPALACHIAN REGION - 912 MORRIS STREET
CHARLESTON, WV 25301 (304) 344-0821
FAX (304) 342-4711

EMPLOYEE OWNED

GEOTECHNICAL, ENVIRONMENTAL AND TESTING ENGINEERS SINCE 1921

CORPORATE CENTER 611 LUNKEN PARK DRIVE CINCINNATI, OH 45226 (513) 321-5816 FAX (513) 321-0294
CENTRAL OHIO REGION 790 MORRISON ROAD COLUMBUS, OH 43230 (614) 863-3113 FAX (614) 863-0475
INDIANA REGION 349 WALNUT STREET, STE 8 LAWRENCEBURG, IN 47025 (812) 539-4300 FAX (812) 539-4301
BLUEGRASS REGION 470-B CONWAY CT., STE B-8 LEXINGTON, KY 40511 (859) 455-8530 FAX (859) 455-8630

LOG OF TEST BORING

Page 1 of 1

Clint: Michael Baker, Jr., Inc.
Project: Corridor H, Section 6 Western Alignment - Contract 2
Boring Location: Station 1781+37 Offset 23.9 Rt.
Elevation Ref.: E.L. Robinson, Inc.
Boring No.: **DS-11**
Date Started: 4/23/2003
Date Completed: 4/24/2003
Work Order No.: 92143.016

ELEV. ft.	DEPTH ft.	Thickness	DESCRIPTION OF MATERIALS (color, material description, moisture, stiffness/density/hardness (visual classification unless otherwise noted))	SAMPLE NO.	TYPE	DEPTH ft.	BLOWS/6" (N Value)	REC. %	RQD %	W %	LL %	PI %	HCSI	PPR tsf
881.60	0.0													
881.20	0.4	0.4	Brown, gravelly TOPSOIL with sand	1	SS	0.0-1.5	4-5-6 (11)	20						
878.60	3.0	2.6	Brown, SILTY SAND WITH GRAVEL (SM, A-2-4), moist, medium dense											
		11.0	Brown, POORLY GRADED GRAVEL WITH SILTY CLAY AND SAND (GP-GC, A-1-b), moist, dense	2	SS	5.0-6.5	22-25-15 (40)	53						
				3	SS	10.0-11.5	22-20-20 (40)	53						
867.60	14.0													
866.80	14.8	0.8	Gray, SILTSTONE, completely weathered, very soft	4	SS	14.5-14.6	50/0.1	200						
864.60	17.0	2.2	Gray, SILTSTONE, laminated, highly jointed (0.1' to 0.3' spacing, 60°), slightly weathered, soft - medium hard	1	NX	14.6-18.1		94	0				2-3	
		18.0	Gray, SILTSTONE, laminated, jointed (0.3' to 1.0' spacing, 60°), slightly weathered, medium hard	2	NX	18.1-21.9		95	18				2-3	
				3	NX	21.9-26.3		100	39				3	
				4	NX	26.3-31.3		100	66				3	
846.60	35.0			5	NX	31.3-35.0		100	78				3	

T - 867.60
B - 852.0

BORING COMPLETED @ 35.0'

General Notes: Driller Bowser; Rig No. Terry; Rig Type Track; Method NX/SS; Inspector BH

Remarks: Drilled on stake at location adjacent to Fort Run.

Water Level Observations: Immediate NW ft.; At Completion 3.5 ft. ▼; After 24 Hrs. NA ft.; Water used in drilling 14.8 ft.
BF = BACKFILLED NW = NO WATER (Measured from ground surface)

TEST BORING CORR H WEST ALIGN.GPJ HC NUTTING.GDT 6/24/03

H.C. NUTTING COMPANY

APPALACHIAN REGION - 912 MORRIS STREET
CHARLESTON, WV 25301 (304) 344-0821
FAX (304) 342-4711

EMPLOYEE OWNED

GEOTECHNICAL, ENVIRONMENTAL AND TESTING ENGINEERS SINCE 1921

CORPORATE CENTER 611 LUNKEN PARK DRIVE CINCINNATI, OH 45226 (513) 321-5816 FAX (513) 321-0294
CENTRAL OHIO REGION 790 MORRISON ROAD COLUMBUS, OH 43230 (614) 863-3113 FAX (614) 863-0475
INDIANA REGION 349 WALNUT STREET, STE 8 LAWRENCEBURG, IN 47025 (812) 518-4300 FAX (812) 539-4301
BLUEGRASS REGION 470-B CONWAY CT., STE B-8 LEXINGTON, KY 40511 (859) 455-8530 FAX (859) 455-8630

LOG OF TEST BORING

Page 1 of 1

Clint: Michael Baker, Jr., Inc.
Project: Corridor H, Section 6 Western Alignment - Contract 2
Boring Location: Station 1781+47 Offset 39.8 Rt.
Elevation Ref.: E.L. Robinson, Inc.
Boring No.: **DS-12**
Date Started: 4/23/2003
Date Completed: 4/23/2003
Work Order No.: 92143.016

ELEV. ft.	DEPTH ft.	Thickness	DESCRIPTION OF MATERIALS (color, material description, moisture, stiffness/density/hardness (visual classification unless otherwise noted))	SAMPLE NO.	TYPE	DEPTH ft.	BLOWS/6" (N Value)	REC. %	RQD %	W %	LL %	PI %	HCSI	PPR tsf
881.80	0.0													
881.50	0.3	0.3	Brown, sandy TOPSOIL with gravel	1	SS	0.0-1.5	4-6-10 (16)	47						
		6.7	Brown, CLAYEY GRAVEL WITH SAND (GC, A-1-b), saturated, medium dense - very dense. Large boulder at 3.0' to 4.5'	2	SS	5.0-6.4	25-35-50/0.4	71						
874.80	7.0													
		7.0	Brown, POORLY GRADED GRAVEL WITH CLAY AND SAND (GP-GC, A-1-b), saturated, dense - very dense. Cobbles throughout	3	SS	10.0-11.5	50-38-30 (68)	33						
867.80	14.0			4	SS	14.0-14.3	50/0.3	100						
		5.0	Gray, SILTSTONE, laminated, highly jointed, slightly weathered, soft - medium hard	1	NX	14.3-15.5		100	0				2-3	
				2	NX	15.5-19.0		94	0				2-3	
862.80	19.0													
		14.5	Gray, SILTSTONE, laminated, bedded at 60°, jointed (0.5' to 1.0' spacing), slightly weathered, medium hard	3	NX	19.0-23.5		100	29				3	
				4	NX	23.5-28.5		94	50				3	
				5	NX	28.5-33.5		96	52				3	
848.30	33.5		BORING COMPLETED @ 33.5'											

T - 867.80
B - 855.0

General Notes: Driller Bowser; Rig No. Terry; Rig Type Track; Method NX/SS; Inspector BH

Remarks:

Water Level Observations: Immediate 3.0 ft. ▽; At Completion CI ft.; After 24 Hrs. CI ft.; Water used n drilling 3.0 ft.
BF = BACKFILLED NW = NO WATER (Measured from ground surface)

TEST BORING CORR H WEST ALIGN.GPJ HC NUTTING.GDT 6/24/03

LEGEND:

T ———— - TOP OF CAISSON ROCK SOCKET
B – – – – - BOTTOM OF CAISSON ROCK SOCKET

	DATE
DESIGNED	06/03
DRAWN	06/03
CHECKED	06/03
CHECKED	06/03

NO.	REVISION	DATE:	BY:

W. VA. DEPARTMENT OF TRANSPORTATION
DIVISION OF HIGHWAYS

ROUTE US 48
MOOREFIELD DISTRICT
FORT RUN BRIDGE
CORE BORING LOGS
SHEET 7 OF 7

Baker
Michael Baker Jr., Inc. Charleston, W.Va.

SHEET S40 OF S40
BRIDGE NO. 10444

L:\proj\CorridorH\...\Bridge\Fort Run\Final\Drawings\FortRun-Final-Borlog7.dgn

PUBLIC ROADS Div.	STATE DIST. NO.	STATE PROJ. NO.	FEDERAL PROJ. NO.	FISCAL YEAR	COUNTY	SHEET NO.	TOTAL SHEETS
W.V.	5	X316 -H- 100.40	APD-0484- (251)C	2003	HARDY	318	670

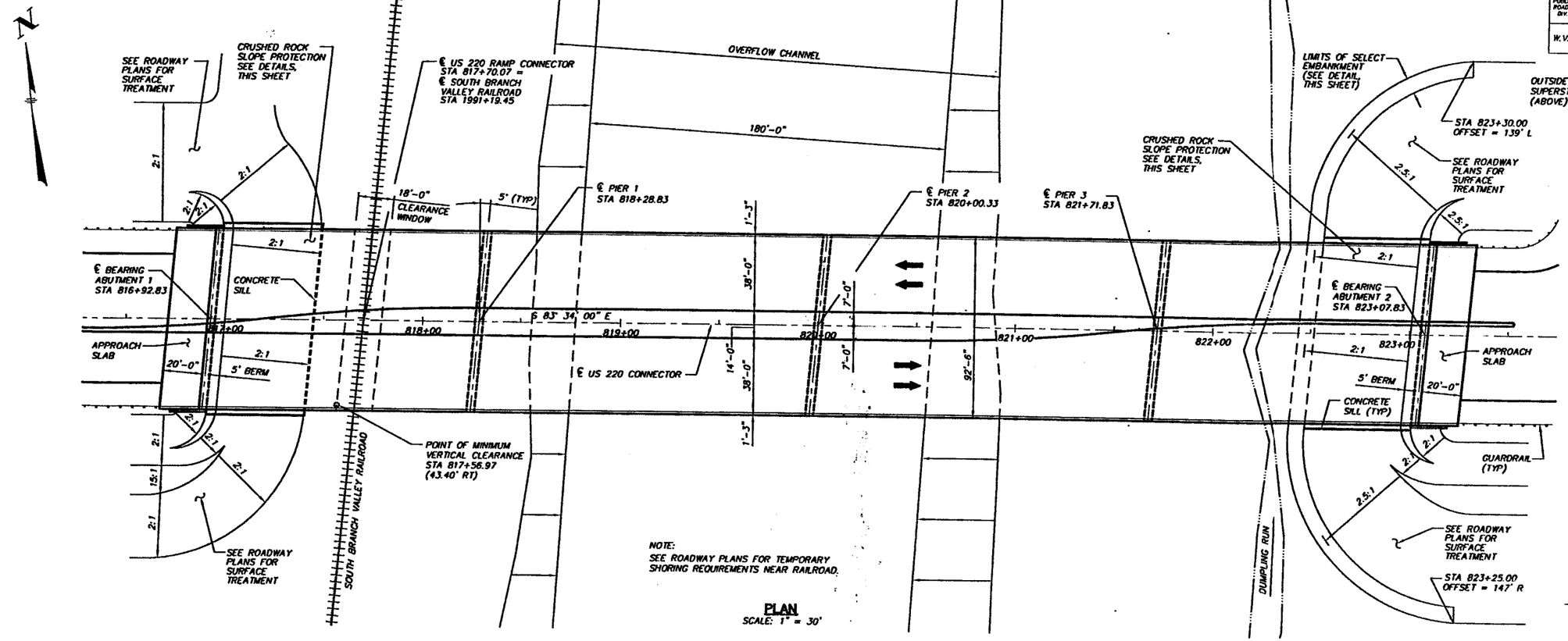

PLAN
SCALE: 1" = 30'

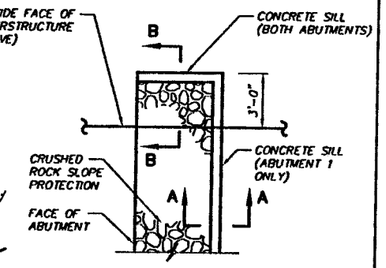

CRUSHED ROCK SLOPE PROTECTION PLAN
NTS

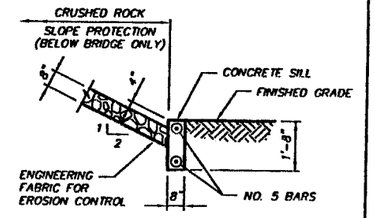

SECTION A-A
NTS

NOTE:
COST OF CONCRETE SILL IS INCIDENTAL TO ITEM 218004-001, 8" CRUSHED ROCK SLOPE PROTECTION.

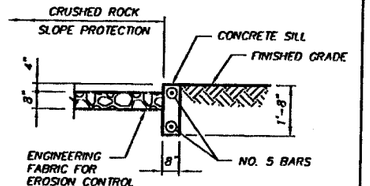

SECTION B-B
NTS

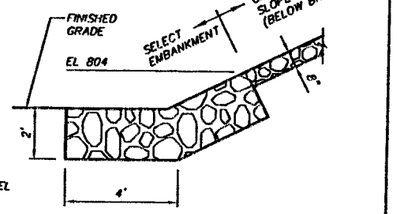

SELECT EMBANKMENT DETAIL AT ABUTMENT NO. 2
NTS

HYDRAULIC DATA:
DRAINAGE AREA = 5.22 SQ MI
Q(50) VELOCITY = 2 FT/S
Q(50) ELEVATION = 800.5 FT
Q(100) VELOCITY = 2.5 FT/S
Q(100) ELEVATION = 800.9 FT

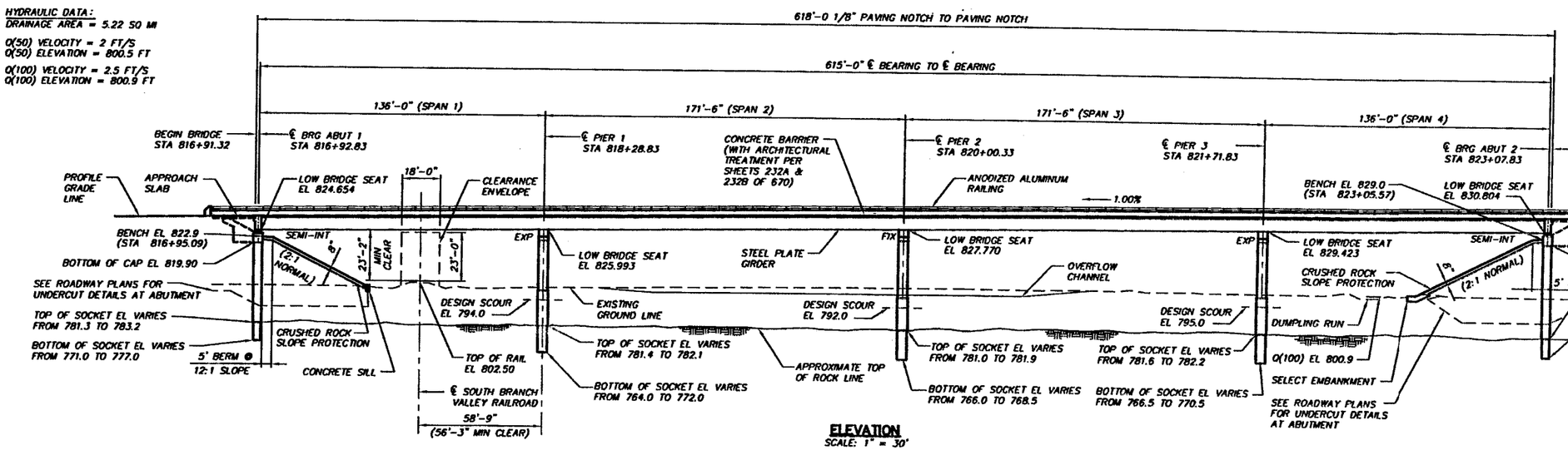

ELEVATION
SCALE: 1" = 30'

NOTE:

SELECT EMBANKMENT AVERAGE STONE SIZE (D50) TO BE 0.95'.

SELECT EMBANKMENT SHALL BE PAID FOR UNDER ROADWAY BID ITEM 211002-000, ROCK BORROW EXCAVATION. QUANTITY OF SELECT EMBANKMENT = 300 CY.

NO.	REVISION	BY	DATE

GENERAL PLAN AND ELEVATION

WEST VIRGINIA DEPARTMENT OF TRANSPORTATION
US 220 RAMP CONNECTOR BRIDGE
BRIDGE NO 10445
HARDY COUNTY, WEST VIRGINIA

L.A. GATES COMPANY
ENGINEERS AND CONSULTANTS
BECKLEY, WEST VIRGINIA
ROANOKE, VIRGINIA

SHEET NO. S1

DESIGNER	DRAWN	CHECKED	DATE	SCALE	REVISIONS
BMB	RWR/BMB	JFM	SEP '03	SHOWN	

CADD FILE NAME: GPAE-113
PLOT SCALE: 1=1

PUBLIC ROADS DIV.	STATE DIST. NO.	STATE PROJ. NO.	FEDERAL PROJ. NO.	FISCAL YEAR	COUNTY	SHEET NO.	TOTAL SHEETS
W.V.	5	X316 -H- 100.40	APD-0484-(251)C	2003	HARDY	319	670

GENERAL NOTES

GOVERNING SPECIFICATIONS

THE WEST VIRGINIA DEPARTMENT OF TRANSPORTATION, DIVISION OF HIGHWAYS, STANDARD SPECIFICATIONS ROADS AND BRIDGES, ADOPTED 2000, AND THE WEST VIRGINIA DEPARTMENT OF TRANSPORTATION, DIVISION OF HIGHWAYS, SUPPLEMENTAL SPECIFICATIONS DATED JANUARY 1, 2003, THE CONTRACT DOCUMENTS, AND THE CONTRACT PLANS ARE THE GOVERNING PROVISIONS APPLICABLE TO THIS PROJECT.

DESIGN

THE DESIGN IS IN ACCORDANCE WITH THE AASHTO LRFD BRIDGE DESIGN SPECIFICATIONS, SECOND EDITION, 1998, AS AMENDED BY 1999 THROUGH 2002 INTERIM REVISIONS. THIS STRUCTURE HAS BEEN DESIGNED FOR A LIVE LOAD CAPACITY OF 2 LANES OF HL-93 VEHICULAR LOAD. THE DESIGN PROVIDES FOR AN ADDITIONAL FUTURE WEARING SURFACE (NOT INCLUDED IN CONTRACT) OF 25 PSF.

A UNIFORM DECK LOAD OF 25 PSF (INCLUDING CONCRETE) IS INCLUDED IN THE DESIGN FOR PERMANENT DECK FORMS. PERMANENT METAL DECK FORMS ARE TO BE DESIGNED BY THE CONTRACTOR IN ACCORDANCE WITH THE SUPPLEMENTAL SPECIFICATIONS.

THE EMPIRICAL METHOD HAS BEEN USED FOR DESIGN OF THE BRIDGE DECK. REDISTRIBUTION OF NEGATIVE MOMENTS HAS NOT BEEN USED FOR STEEL GIRDER DESIGN.

THE SUPERSTRUCTURE HAS BEEN DESIGNED AS A COMPOSITE SECTION. 1/4" OF CONCRETE DECK SLAB THICKNESS HAS BEEN REMOVED FROM SECTION PROPERTIES FOR DESIGN TO PROVIDE FOR GRINDING, GROOVING AND SACRIFICIAL SURFACE.

NO ANALYSIS FOR REDECKING OF THE BRIDGE HAS BEEN CONDUCTED.

IMPORTANCE CATEGORY FOR SEISMIC DESIGN IS CLASSIFIED AS "ESSENTIAL".

FATIGUE DESIGN IS BASED ON AN AVERAGE ADTT OF 3,000 IN A SINGLE LANE.

DESIGN OF DRILLED CAISSONS AT THE ABUTMENTS AND PIERS RELIES ON LATERAL SUPPORT PROVIDED BY THE SOIL.

DESIGN UNIT STRESSES

CLASS B CONCRETE	f'c = 3000 psi	
CLASS B MODIFIED CONCRETE	f'c = 4500 psi	
CLASS H CONCRETE	f'c = 4000 psi	
CLASS H CONCRETE, ARCHITECTURAL	f'c = 4000 psi	
REINFORCING STEEL	fs = 24 ksi	GRADE 60
STRUCTURAL STEEL	AASHTO M270	
	(GRADE 50W)	Fy = 50 ksi
	(GRADE HPS70W)	Fy = 70 ksi (CERTAIN GIRDER FLANGE SECTIONS)

CONCRETE

CLASS B CONCRETE SHALL BE USED FOR PIERS, ABUTMENTS, WINGWALLS, AND APPROACH SLABS.

CLASS B MODIFIED CONCRETE SHALL BE USED FOR DRILLED CAISSONS/ROCK SOCKETS. THE MAXIMUM SIZE AGGREGATE SHALL BE EQUAL TO OR SMALLER THAN ONE-FIFTH THE CLEAR SPACING OF THE DRILLED CAISSON REINFORCING STEEL.

CLASS H CONCRETE SHALL BE USED FOR THE BRIDGE DECK AND END DIAPHRAGMS.

CLASS H CONCRETE, ARCHITECTURAL, SHALL BE USED FOR THE BRIDGE BARRIERS AND BARRIERS ON APPROACH SLABS.

A WATER-REDUCING AND RETARDING ADMIXTURE IN ACCORDANCE WITH THE SPECIAL PROVISIONS SHALL BE USED IN ALL DECK CONCRETE. PAYMENT SHALL BE INCLUDED IN THE BID PRICE FOR ITEM 601009-001, CLASS H CONCRETE. RETARDER WILL NOT BE REQUIRED BELOW 50° F. THE CONTRACTOR'S ATTENTION IS CALLED TO THE TEST REQUIREMENTS FOR THE RETARDER ADMIXTURE.

CHAMFER ALL EXPOSED SUPERSTRUCTURE EDGES 3/4" BY 3/4" AND ALL EXPOSED SUBSTRUCTURE EDGES 1" BY 1", UNLESS OTHERWISE NOTED.

WHENEVER CONCRETE IS PLACED USING A CONCRETE PUMP, A STANDBY CONCRETE PUMP SHALL BE PROVIDED AS A BACKUP TO AVOID INTERRUPTION TO CONCRETE PLACEMENT CAUSED BY A BREAKDOWN OF THE PUMP.

EXPOSED SURFACES OF BRIDGE BARRIERS, ABUTMENT WINGWALLS, AND BARRIERS ON ABUTMENT WINGWALLS SHALL RECEIVE A CLASS 2 RUBBED FINISH, IN ACCORDANCE WITH SECTION 601.11.2 OF THE STANDARD SPECIFICATIONS, EXCEPT FOR LOCATIONS WHERE ARCHITECTURAL TREATMENT IS NOTED IN THE PLANS.

ADDITION OF EXTRA BAG OF CEMENT IN ORDER TO ACHIEVE HIGH EARLY STRENGTH AND REDUCTION OF 7-DAY WET CURE SHALL NOT BE PERMITTED FOR ALL CLASSES OF CONCRETE.

CONCRETE FORMING AND FALSEWORK

PERMANENT METAL DECK FORMS SHALL BE USED IN PLACING THE DECK CONCRETE IN ACCORDANCE WITH SECTION 601. AREA OF PERMANENT METAL DECK FORMS = 47,225 SQUARE FEET.

DECK SLAB OVERHANG FORMS SHALL BE SUPPORTED FROM THE BOTTOM FLANGE OF FASCIA GIRDERS. THE CONTRACTOR SHALL SUBMIT FORMING PLANS AND SUPPORTING CALCULATIONS FOR THE OVERHANG TO THE ENGINEER FOR REVIEW PRIOR TO ERECTING THE FORMWORK. DESIGN OF FORMING AND FALSEWORK SHALL BE BY A PROFESSIONAL ENGINEER REGISTERED IN THE STATE OF WEST VIRGINIA, WHO SHALL ALSO VERIFY THAT THE DESIGN IS UTILIZED.

FORM SYSTEMS THAT WILL CAUSE OVERSTRESS OR DEFORMATION TO PERMANENT BRIDGE MEMBERS SHALL NOT BE PERMITTED. THE CONTRACTOR SHALL SUBMIT CALCULATIONS VERIFYING THAT THIS REQUIREMENT IS SATISFIED.

CONCRETE FORMING SHALL BE IN ACCORDANCE WITH SECTION 601.8.

NO SLIP-FORMING OF BARRIERS WILL BE PERMITTED.

REINFORCING STEEL BARS

BARS SHALL CONFORM TO AASHTO M31, GRADE 60. ALL REINFORCEMENT SHALL BE LAPPED 40 BAR DIAMETERS UNLESS SHOWN OTHERWISE ON THE PLANS. BAR SPACING IS GIVEN TO CENTERLINE OF BAR.

THE CLEAR DISTANCE BETWEEN REINFORCING STEEL AND THE FACE OF CONCRETE SHALL BE AS FOLLOWS, UNLESS OTHERWISE SHOWN ON THE DRAWINGS:

TOP OF DECK SLAB	2 1/2"
BOTTOM OF DECK SLAB	1"
BOTTOM OF FOOTINGS	3"
SIDES OF DRILLED CAISSONS & ROCK SOCKETS	3"
OTHER LOCATIONS	2"

BRIDGE SEAT PEDESTALS

BRIDGE SEAT PEDESTALS (AT ABUTMENTS AND PIERS) SHALL BE FINISHED TO TRUE PLANE AND ELEVATION.

BEARINGS

BEARINGS SHALL BE SUBJECT TO TESTING REQUIREMENTS IN ACCORDANCE WITH AASHTO LRFD CONSTRUCTION SPECIFICATION SECTION 18, CORRESPONDING TO DESIGN METHOD B.

ELASTOMERIC BEARING PADS SHALL BE GRADE 3, MINIMUM SHEAR MODULUS OF 160 PSI AND MAXIMUM SHEAR MODULUS OF 175 PSI AT 73° F, AND SHALL CONFORM TO AASHTO SPECIFICATIONS. THE CONTRACTOR SHALL SHOW ON SHOP DRAWINGS THE SHEAR MODULUS THAT WILL BE USED FOR PAD FABRICATION.

BEARINGS SHALL BE POSITIONED SO THAT THEY ARE CENTERED AT 52° F.

INSTALL GIRDERS AND BEARINGS TO PROVIDE FULL CONTACT WITH BEARING SURFACES. JACKING AND RESETTING OF THE STRUCTURE SHALL BE DONE AFTER THE DECK IS IN PLACE TO ACHIEVE FULL CONTACT WITH BEARING SURFACES. ADJUSTMENTS/MODIFICATIONS ARE SUBJECT TO THE APPROVAL OF THE ENGINEER.

SUB SURFACE INVESTIGATION

THE GEOTECHNICAL AND FOUNDATION DESIGNS ARE BASED ON BORINGS DRILLED AND THE SUBSURFACE INVESTIGATION REPORT PREPARED BY HC NUTTING CO. THIS REPORT INCLUDES THE ENGINEERING LOGS AS COMPILED BY FIELD DATA. THE FIELD LOGS AND REPORT ARE AVAILABLE FOR REVIEW DURING NORMAL BUSINESS HOURS AT HC NUTTING CO., 912 MORRIS STREET, CHARLESTON, WV 25301 (304) 344-0821.

DRILLED CAISSONS

DRILLED CAISSON FOUNDATIONS, INCLUDING TEST HOLE, SHALL BE CONSTRUCTED IN ACCORDANCE WITH SECTION 625.

A DRILLED CAISSON TEST HOLE SHALL BE CONSTRUCTED AT THE APPROXIMATE LOCATION SHOWN ON THE PLANS PRIOR TO INSTALLATION OF PERMANENT CAISSONS. THE TEST HOLE SHALL BE 60" DIAMETER. THE TEST HOLE ROCK SOCKET SHALL BE 54" DIAMETER, AND SHALL EXTEND MINIMUM 10' INTO ROCK.

THE LENGTH OF THE ROCK SOCKETS IS BASED ON THE COMBINATION OF THE END BEARING AND THE SIDE SHEAR RESISTANCE OF THE ROCK (PER PUBLICATION FHWA-IF-99-025).

ROCK SOCKET AXIAL FACTORED RESISTANCE AND FACTORED LOADS:

LOCATION	FACTORED RESISTANCE*	MAXIMUM FACTORED LOAD
ABUTMENTS (42" DIA ROCK SOCKET)	1123 K	1067 K
PIERS (54" DIA ROCK SOCKET)	2644 K	2569 K

*BASED ON 45 TSF (FACTORED END BEARING RESISTANCE) PLUS 7.8 TSF (FACTORED SIDE SHEAR RESISTANCE).

EXCAVATION

ALL EXCAVATION SHALL BE CLASSIFIED AS STRUCTURE EXCAVATION, ITEM 212001-000.

ANY COFFERDAMS OR SHEETING REQUIRED TO EXCAVATE AND PLACE CONCRETE IN THE DRY SHALL BE CONSIDERED INCIDENTAL TO THE COST OF STRUCTURE EXCAVATION AND NO SEPARATE PAYMENT WILL BE ALLOWED.

ALL FOUNDATION EXCAVATIONS SHALL BE VISUALLY INSPECTED AND APPROVED BY THE ENGINEER PRIOR TO CONCRETE PLACEMENT.

SELECT EMBANKMENT

THE AVERAGE STONE SIZE (D50) FOR SELECT EMBANKMENT SHALL BE 0.95 FEET. THE ROCK SHALL BE WELL GRADED AS FOLLOWS:

STONE SIZE	PERCENT OF GRADATION SMALLER THAN
1.3 FEET	100%
0.95 FEET	50%
0.4 FEET	10%

THE USE OF SHALES WILL NOT BE PERMITTED.

STRUCTURAL STEEL

ALL STRUCTURAL STEEL FOR THE BRIDGE SUPERSTRUCTURE SHALL MEET THE REQUIREMENTS OF AASHTO M270 GRADE 50W, INCLUDING ALL SPLICE PLATES, STIFFENERS, CONNECTION PLATES, CROSS-BRACE MEMBERS, DRAINAGE ASSEMBLIES, INSPECTION HANDRAIL COMPONENTS, AND SOLE PLATES, EXCEPT CERTAIN TOP AND BOTTOM GIRDER FLANGE PLATES, AS INDICATED ON THE PLANS, SHALL MEET THE REQUIREMENTS OF AASHTO M270, GRADE HPS70W.

DECK DRAIN COMPONENTS SHALL BE HOT-DIP GALVANIZED ACCORDING TO AASHTO M111 AFTER FABRICATION AND PAINTED. THE COLOR OF THE FINAL SHOP COAT SHALL BE 30045 ACCORDING TO FEDERAL STANDARD 595 AND THE GLOSS AT AN ANGLE OF 60 DEGREES SHALL NOT EXCEED 25.

ALL STRUCTURAL STEEL FOR GIRDER FLANGE AND SPLICE PLATES DESIGNATED ON THE PLANS AS BEING IN TENSION OR STRESS REVERSAL AREAS, AND ALL WEB PLATES SHALL COMPLY WITH THE TOUGHNESS REQUIREMENTS OF SECTION 615.3.1.1.

BEARING STIFFENERS, FUTURE JACKING STIFFENERS AND ENDS OF GIRDERS SHALL BE VERTICAL AFTER DEAD LOAD DEFLECTION OF THE STRUCTURE.

THE LUMP SUM BID FOR ITEM 615001-001, STEEL SUPERSTRUCTURE, SHALL INCLUDE ALL STEEL, COMPLETE IN PLACE, INCLUDING FASTENERS, SOLE PLATES, DRAINAGE ASSEMBLIES, INSPECTION HANDRAIL COMPONENTS, PAINTING, GALVANIZING AND WELDING.

WELDING

ALL WELDING SHALL COMPLY WITH ANSI/AASHTO/AWS BRIDGE WELDING CODE D1.5-2002.

NO FIELD WELDING WILL BE PERMITTED UNLESS SPECIFICALLY SHOWN ON THE PLANS OR APPROVED BY THE ENGINEER.

WORKING DRAWINGS

ALL SUBMISSIONS, INCLUDING SHOP DRAWINGS AND ERECTION DRAWINGS, SHALL BE STAMPED WITH THE GENERAL CONTRACTOR'S APPROVAL PRIOR TO SUBMISSION TO THE ENGINEER FOR REVIEW.

THE DESIGN CALCULATIONS AND PLANS FOR ANY PROPOSED FALSEWORK, COFFERDAMS, SHEETING, OR OTHER TEMPORARY SUPPORTS OR BRACING REQUIRED TO CONSTRUCT THE STRUCTURE SHALL BE SIGNED AND SEALED BY A PROFESSIONAL ENGINEER REGISTERED IN THE STATE OF WEST VIRGINIA, BEFORE BEING SUBMITTED TO THE ENGINEER FOR REVIEW.

PRIOR TO IMPOSING ANY CONSTRUCTION LOADS ON THE STRUCTURE, THE GENERAL CONTRACTOR SHALL SUBMIT PLANS AND SUPPORTING CALCULATIONS, SEALED BY A PROFESSIONAL ENGINEER REGISTERED IN THE STATE OF WEST VIRGINIA, DEMONSTRATING THAT SUCH LOADINGS DO NOT INTRODUCE ANY DETRIMENTAL EFFECTS INTO THE STRUCTURE.

ALL SUBMISSIONS FOR REVIEW SHALL BE SENT TO:
L.A. GATES COMPANY
2302 SOUTH FAYETTE STREET
BECKLEY, WV 25801

SPECIAL PROVISIONS

STRUCTURAL CONCRETE CLASS H BRIDGE DECKS
DRILLED CAISSON FOUNDATIONS
JOINT MATERIALS
ELASTOMERIC BEARING ASSEMBLIES
STEEL STRUCTURES

FASTENERS

HIGH STRENGTH FASTENERS SHALL COMPLY WITH SECTION 709.24 AND SHALL BE BLACK (UNCOATED) TYPE 3 WEATHERING STEEL, EXCEPT HIGH STRENGTH FASTENERS TO BE USED IN PAINTED AREAS SHALL BE TYPE 1 OR 3 AND SHALL BE MECHANICALLY GALVANIZED IN ACCORDANCE WITH AASHTO M298.

ALL FASTENERS SHALL BE 7/8" DIAMETER HIGH STRENGTH BOLTS (AASHTO M164), UNLESS OTHERWISE NOTED. THE THREADED ENDS OF BOLTS SHALL BE PLACED ON THE INSIDE, WHERE PRACTICAL, FOR PROTECTION FROM THE WEATHER.

HOLES SHALL BE 1/16" LARGER THAN THE NOMINAL DIAMETER OF THE FASTENERS, UNLESS OTHERWISE NOTED.

BEFORE ASSEMBLING HIGH STRENGTH BOLTED CONNECTIONS, REMOVE ALL LOOSE AND NONADHERENT RUST THAT MAY HAVE FORMED ON THE CONNECTION AREAS BY HAND OR POWER WIRE BRUSHING. PROVIDE A CLASS B SLIP COEFFICIENT FOR THE CONTACT AREA OF THE BOLTED PARTS.

ANCHOR BOLTS

ANCHOR BOLTS/NUTS/WASHERS SHALL BE GALVANIZED IN ACCORDANCE WITH AASHTO M232. COSTS SHALL BE INCLUDED IN THE PRICE PAID FOR BEARINGS.

THE CONTRACTOR SHALL COORDINATE INSTALLATION OF ANCHOR BOLTS AND ERECTION OF PIER CROSS-FRAMES TO AVOID ANY CONSTRUCTION CONFLICTS. WHERE APPLICABLE, FILL ANCHOR BOLT HOLES WITH NON-SHRINK GROUT IN ACCORDANCE WITH THE SPECIAL PROVISIONS.

WELDED SHEAR STUD CONNECTORS

ALL WELDED STUD SHEAR CONNECTORS SHALL CONFORM TO THE REQUIREMENTS OF SECTION 615.3.3 OF THE STANDARD SPECIFICATIONS. THE CONNECTORS SHALL BE ATTACHED IN THE FIELD. NO SHOP INSTALLATION OF WELDED STUD SHEAR CONNECTORS WILL BE PERMITTED. THE FIELD INSTALLATION OF THE CONNECTORS SHALL NOT COMMENCE PRIOR TO THE INSTALLATION OF DECK FORMS IN THE AREA SURROUNDING THE STUDS. EXTERIOR DECK OVERHANG FORMS MAY BE INSTALLED AFTER THE WELDED STUD SHEAR CONNECTORS. THE SHEAR CONNECTORS AND DECK FORMS SHALL BE INSTALLED IN A SEQUENCE THAT PERMITS WORKERS ACCESS THROUGH THE DECK AREA WITHOUT WALKING THROUGH INSTALLED CONNECTORS.

BLAST CLEANING AND PAINTING

UPON COMPLETION OF ALL FABRICATION OPERATIONS IN THE SHOP, AND PRIOR TO SHIPMENT TO THE PROJECT SITE, ALL WEATHERING STEEL BRIDGE COMPONENTS SHALL BE BLAST CLEANED TO A NEAR WHITE SURFACE CONDITION ACCORDING TO SSPC-SP10. PRIOR TO THE START OF ANY BLAST CLEANING, ALL OIL, GREASE, CUTTING FLUIDS OR OTHER FOREIGN MATTER SHALL BE REMOVED FROM THE SURFACES OF THE STEEL BY SOLVENT CLEANING ACCORDING TO SSPC-SP1.

THE MEMBERS OR PORTIONS OF MEMBERS LISTED BELOW SHALL BE BLAST CLEANED AND SHOP PAINTED ACCORDING TO SECTION 688 OF THE STANDARD SPECIFICATIONS:

THE ENDS OF THE GIRDERS AND ALL OTHER STRUCTURAL COMPONENTS ENCASED IN THE CONCRETE END DIAPHRAGMS PLUS 12 INCHES IN LENGTH SHALL BE BLAST CLEANED AND SHOP PAINTED ACCORDING TO SECTION 688 USING THE ZINC RICH LOW VOC SYSTEM, SECTION 711.22. THE FULL PAINT SYSTEM SHALL BE APPLIED IN THE FABRICATION SHOP, EXCEPT FOR FAYING SURFACES OF HIGH STRENGTH BOLTED CONNECTIONS, WHICH SHALL BE SHOP PAINTED WITH PRIMER ONLY. THE COLOR OF THE FINAL SHOP COAT SHALL BE 30045 ACCORDING TO FEDERAL STANDARD 595 AND THE GLOSS AT AN ANGLE OF 60 DEGREES SHALL NOT EXCEED 25.

AREAS OF THE SHOP APPLIED PAINT SYSTEM WHICH ARE DAMAGED DURING ERECTION AND HIGH STRENGTH BOLTED CONNECTION AREAS THAT WERE ONLY PRIME PAINTED SHALL BE PROPERLY CLEANED AND PAINTED ACCORDING TO SECTION 688 OF THE STANDARD SPECIFICATIONS, AND TO THE SATISFACTION OF THE ENGINEER.

ALL CLEANING AND PAINTING COSTS SHALL BE INCLUDED IN ITEM 615001-001, STEEL SUPERSTRUCTURE.

IDENTIFICATION MARKING OF STEEL MEMBERS

ALL STEEL MILL AND FABRICATOR IDENTIFICATION MARKINGS FOR STEEL PLATES, SHAPES OR FABRICATED MEMBERS SHALL BE BY METAL TAGS, SOAPSTONE, OR SOME OTHER READILY REMOVABLE MATERIAL; OR SHALL BE MARKED IN AN AREA OF THE COMPLETED MEMBER WHICH WILL BE ENCASED OR COVERED WITH CONCRETE. MARKING METHODS AND LOCATIONS ARE SUBJECT TO APPROVAL OF THE ENGINEER.

PAINT OR WAX-BASED CRAYONS SHALL NOT BE USED FOR MARKING.

NO.	REVISION	BY	DATE

GENERAL NOTES

WEST VIRGINIA DEPARTMENT OF TRANSPORTATION
US 220 RAMP CONNECTOR BRIDGE
BRIDGE NO 10445
HARDY COUNTY, WEST VIRGINIA

L.A. GATES COMPANY
ENGINEERS AND CONSULTANTS
BECKLEY, WEST VIRGINIA
ROANOKE, VIRGINIA

SHEET NO. **S2**

DESIGNER	DRAWN	CHECKED	DATE	SCALE	REVISIONS
GPH	RWR	JFM	SEP '03	NONE	

CADD FILE NAME: GEN-NOTES-113
PLOT SCALE: 1=1

PUBLIC ROADS DIV.	STATE DIST. NO.	STATE PROJ. NO.	FEDERAL PROJ. NO.	FISCAL YEAR	COUNTY	SHEET NO.	TOTAL SHEETS
W.V.	5	X316 -H- 100.40	APD-0484-(251)C	2003	HARDY	320	670

HANDLING, STORING AND TRANSPORTING STEEL MEMBERS

STEEL MEMBERS SHALL NOT BE GOUGED, SCRATCHED, DENTED OR ALLOWED TO RUB AGAINST OTHER MEMBERS THAT WOULD RESULT IN DAMAGE TO THE BLAST CLEANED PROFILE OF THE STEEL. MEMBERS SHALL BE HANDLED USING SOFTENERS AND SLINGS INSTEAD OF CHOKERS AND CHAINS.

STORE MEMBERS IN THE FABRICATION SHOP AND ON THE PROJECT SITE IN SUCH A MANNER AS TO BE KEPT FREE AND CLEAN OF ALL FOREIGN SUBSTANCES SUCH AS GREASE, OIL, MORTAR AND CONCRETE SPLATTER, CHALK AND CRAYON MARKS, PAINT AND DIRT. ALL STORAGE SHALL BE ABOVE GROUND AND SLOPED TO ALLOW FREE DRAINAGE OF MELTED SNOW, RAINWATER AND DEW. IF STORED FOR PERIODS LONGER THAN 3 MONTHS, MEMBERS MUST BE PLACED ON METAL SUPPORTS. FOR PERIODS OF STORAGE UP TO 3 MONTHS, MEMBERS MAY BE PLACED ON CLEAN, UNTREATED WOOD TIMBERS.

STORE PLATE GIRDERS WITH THE WEB IN THE UPRIGHT POSITION. THE MEMBERS MAY BE STACKED, PROVIDED METAL OR WOOD SUPPORTS, AS NOTED ABOVE, SEPARATE INDIVIDUAL MEMBERS. UNDER NO CIRCUMSTANCES SHALL MEMBERS BE NESTED TOGETHER OR BUNDLED.

DO NOT ALLOW TREATED LUMBER OR TREATED TIMBER TO CONTACT STEEL MEMBERS. CONTACT WITH CLEAN UNTREATED LUMBER OR TIMBER WILL NOT DAMAGE THE STEEL MEMBERS.

IF GIRDERS CANNOT BE SHIPPED IN THE SPECIFIED LENGTHS, ADDITIONAL FIELD SPLICES WILL BE PERMITTED AT THE REQUEST OF THE CONTRACTOR UPON APPROVAL FROM THE WEST VIRGINIA DEPARTMENT OF TRANSPORTATION, DIVISION OF HIGHWAYS. NO COMPENSATION WILL BE ALLOWED FOR SPECIFIC MATERIAL NOT SHOWN ON THE DRAWINGS. FIELD SPLICE DETAILS, INCLUDING DESIGN CALCULATIONS SIGNED/SEALED BY A PROFESSIONAL ENGINEER REGISTERED IN THE STATE OF WEST VIRGINIA, SHALL BE SUBMITTED TO THE ENGINEER FOR REVIEW.

PROTECTION OF CONCRETE SUBSTRUCTURE

BEFORE PLACING ANY STEEL SUPERSTRUCTURE MEMBERS ON CONCRETE SUBSTRUCTURE UNITS, THE CONTRACTOR SHALL COAT ALL EXPOSED AREAS OF THE ABUTMENTS; AND TOPS, SIDES AND ALL FACES OF PIER CAPS AND PIER STEMS TO THE GROUND ELEVATION WITH AN APPROVED SILANE BASED CONCRETE SEALER. PREPARATION OF SURFACES, APPLICATION RATES AND METHODS SHALL BE AS RECOMMENDED BY THE SILANE MANUFACTURER.

THE CONTRACTOR SHALL TAKE APPROPRIATE MEASURES TO PROTECT THE CONCRETE SUBSTRUCTURE FROM RUST STAINING DURING CONSTRUCTION AND CURING OF SUPERSTRUCTURE CONCRETE. WATER RUNOFF FROM CONCRETE CURING OPERATIONS SHALL BE DEFLECTED AWAY FROM THE STEEL GIRDERS AND SHALL NOT DRAIN ONTO THE SUBSTRUCTURE CONCRETE AFTER CONTACTING THE WEATHERING STEEL.

UPON COMPLETION OF ALL SUPERSTRUCTURE CONCRETE CURING OPERATIONS, THE CONTRACTOR SHALL REMOVE ALL RUST STAINS FROM SUBSTRUCTURE UNITS USING PROPRIETARY CHEMICAL STAIN REMOVERS OR MILD ACID ETCHING.

ABRASIVE BLAST CLEANING MAY BE USED TO SUPPLEMENT THE OTHER CLEANING METHODS IF THE STAINED AREAS ARE SEVERE OR EXTENSIVE. ALL CLEANING METHODS SHALL BE SUBJECT TO THE APPROVAL OF THE ENGINEER.

RE-COAT SUBSTRUCTURE CONCRETE AT ALL AREAS WHERE RUST STAINS WERE REMOVED, REGARDLESS OF THE CLEANING METHOD USED, WITH AN APPROVED SILANE BASED CONCRETE SEALER, AS SPECIFIED ABOVE.

ABUTMENT BRIDGE SEAT PEDESTALS SHALL BE EPOXY COATED PER SECTION 601.13.2 OF THE STANDARD SPECIFICATIONS.

INCLUDE THE COST OF EPOXY AND SILANE COATINGS, PROTECTING, CLEANING AND RE-COATING SUBSTRUCTURE UNITS IN ITEM 601002-001, CLASS B CONCRETE.

FINAL CLEANUP OF STRUCTURAL STEEL SURFACES

UPON COMPLETION OF ALL CONCRETE CURING OPERATIONS, THE CONTRACTOR SHALL CLEAN ALL STEEL SURFACES TO REMOVE ALL GREASE, OIL, CONCRETE RESIDUE, DIRT AND OTHER FOREIGN SUBSTANCES TO THE SATISFACTION OF THE ENGINEER.

CLEANING MAY BE BY HIGH PRESSURE WATER, POWER OR HAND WIRE BRUSHING, OR BY BRUSH-OFF BLAST CLEANING ACCORDING TO SSPC-SP7. CLEANING SHALL BE FOLLOWED BY A CLEAN WATER RINSE TO REMOVE ALL RESIDUE OF DETERGENTS AND CLEANSERS IF THEY WERE USED. ALL GREASE AND OIL SHALL BE REMOVED BY SOLVENT CLEANING PRIOR TO THE CLEAN WATER RINSE.

ACIDS SHALL NOT BE USED TO REMOVE STAINS.

ALL COSTS FOR FINAL CLEANUP OF STEEL SURFACES SHALL BE INCLUDED IN ITEM 615001-001, STEEL SUPERSTRUCTURE.

ARCHITECTURAL TREATMENT

ARCHITECTURAL TREATMENT SHALL COMPLY WITH THE REQUIREMENTS OF SECTION 601.8.10 OF THE STANDARD SPECIFICATIONS. PRODUCTION FORMLINER FOR ARCHITECTURAL TREATMENT SHALL NOT BE ORDERED WITHOUT WRITTEN APPROVAL OF THE ENGINEER. ALL FORMLINERS SHALL BE FROM THE SAME MANUFACTURER AND SAMPLE PANELS SHALL BE SUBMITTED TO THE ENGINEER FOR APPROVAL.

WEIGHT OF REINFORCING STEEL BARS - LBS

	LOCATION	#3	#4	#5	#6	#8	#9	#10	#11	#14	TOTAL
UNCOATED	ABUTMENT 1	-	650	76	-	-	-	-	-	-	726
	ABUTMENT 2	-	650	76	-	-	-	-	-	-	726
	PIER 1	-	733	134	9,015	1,452	-	-	26,785	-	38,119
	PIER 2	-	733	134	9,377	7,699	-	-	15,734	-	33,677
	PIER 3	-	733	134	9,196	1,452	-	-	27,776	-	39,291
	TOTAL (ITEM 602001-001)	-	3,499	554	27,588	10,603	-	-	70,295	-	112,539
EPOXY COATED	ABUTMENT 1	-	1,152	93	7,333	142	-	7,355	-	-	16,075
	ABUTMENT 2	-	1,152	93	7,333	142	-	7,355	-	-	16,075
	SUPERSTRUCTURE	2,035	181,598	88,706	40,604	2,856	-	-	-	-	315,799
	TOTAL (ITEM 602002-001)	2,035	183,902	88,892	55,270	3,140	-	14,710	-	-	347,949

BRIDGE PLATE

INSTALL A NEW BRIDGE PLATE ON THE ROADWAY FACE OF THE RIGHT BARRIER AT ABUTMENT 1 AS DIRECTED BY THE ENGINEER.

ABBREVIATIONS

AASHTO = AMERICAN ASSOCIATION OF STATE HIGHWAY AND TRANSPORTATION OFFICIALS
ABUT = ABUTMENT
BF = BACK FACE
BOTT = BOTTOM
BM = BEAM
BRG = BEARING
BTWN = BETWEEN
CJ = CONSTRUCTION JOINT
CLR = CLEAR OR CLEARANCE
CJP = COMPLETE JOINT PENETRATION
CTR = CENTER
CY = CUBIC YARD
DIA = DIAMETER
DIM = DIMENSION
DTL = DETAIL
EA = EACH
EF = EACH FACE
EL = ELEVATION
EQ = EQUAL
EST = ESTIMATED
EW = EACH WAY
EXP = EXPANSION
F = FARENHEIT
FF = FRONT FACE OR FAR FACE
FIN = FINISHED
FLG = FLANGE
FS = FIELD SPLICE
FTG = FOOTING
GA = GAUGE
GALV = GALVANIZED
GRD = GRADE OR GROUND
HS = HIGH STRENGTH
ID = INSIDE DIAMETER
INC = INCREMENTS
INT = INTEGRAL
KCJ = KEYED CONSTRUCTION JOINT
LB = POUND
LF = LINEAR FOOT
LRFD = LOAD AND RESISTANCE FACTOR DESIGN
LS = LUMP SUM
LT = LEFT
MAX = MAXIMUM
MFGR = MANUFACTURER
MIN = MINIMUM
NF = NEAR FACE
NO. = NUMBER
NTS = NOT TO SCALE
OD = OUTSIDE DIAMETER
PAE = PERMANENT ACCESS EASEMENT
PEJM = PREFORMED EXPANSION JOINT FILLER MATERIAL
PGL = PROFILE GRADE LINE
PSF = POUNDS PER SQUARE FOOT
PSI = POUNDS PER SQUARE INCH
PTFE = POLYTETRAFLUORETHYLENE
PVC = POLY VINYL CHLORIDE
R = RADIUS
RCJ = ROUGHENED CONSTRUCTION JOINT
REQ'D = REQUIRED
RT = RIGHT
R/W = RIGHT-OF-WAY
SER = SERIES
SF = SQUARE FOOT
SHT = SHEET
SIP = STAY-IN-PLACE
SP = SPACES
SQ = SQUARE
SS = STAINLESS STEEL
SSPC = THE SOCIETY FOR PROTECTIVE COATINGS
STA = STATION
STR = STRAIGHT
TC = TANGENT TO CURVE
THK = THICK
TCE = TEMPORARY CONSTRUCTION EASEMENT
TP = TURNING POINT
TYP = TYPICAL
VERT = VERTICAL
WP = WORKING POINT

INDEX OF BRIDGE SHEETS

SHEET NO.	TITLE	SHEET NO.	TITLE
S1	GENERAL PLAN AND ELEVATION	S22	INSPECTION HANDRAIL DETAILS
S2	GENERAL NOTES	S23	CAMBER DIAGRAMS
S3	GENERAL NOTES AND ESTIMATED QUANTITIES	S24	DECK ELEVATIONS
S4	FOUNDATION LAYOUT	S25	DECK SLAB - SPANS 1 AND 2
S5	DRILLED CAISSONS	S26	DECK SLAB - SPANS 3 AND 4
S6	ABUTMENTS 1 AND 2	S27	DECK SLAB SECTIONS
S7	ABUTMENT WINGWALLS	S28	DECK SLAB DETAILS
S8	ABUTMENT DETAILS	S29	END DIAPHRAGMS
S9	REINFORCING BAR SCHEDULE - ABUTMENTS	S30	END DIAPHRAGM DETAILS
S10	PIER 1	S31	LIGHTING BLISTERS
S11	PIER 2	S32	JUNCTION BOX DETAILS
S12	PIER 3	S33	REINFORCING BAR SCHEDULE - SUPERSTRUCTURE
S13	PIER DETAILS	S34	ALUMINUM BICYCLE RAILING
S14	REINFORCING BAR SCHEDULE - PIERS	S35	STAY-IN-PLACE FORMS
S15	FRAMING PLAN	S36	APPROACH SLABS
S16	INTERIOR GIRDER ELEVATION AND MISCELLANEOUS STEEL DETAILS	S37	BARRIER AND RAISED MEDIAN DETAILS ON APPROACH SLABS
S17	EXTERIOR GIRDER ELEVATION	S38	REINFORCING BAR SCHEDULE - APPROACH SLABS
S18	FIELD SPLICES	S39	SITUATION PLAN
S19	CROSS-FRAME AND STIFFENER DETAILS	S40	LOAD RATING NOTES
S20	BEARINGS	S41	LOAD RATING TABLES
S21	DRAINAGE SCUPPER AND DRIP BAR DETAILS	S42-S66	CORE BORINGS

ESTIMATE OF BRIDGE QUANTITIES

ITEM NO.	DESCRIPTION	UNIT	ABUTMENT 1	ABUTMENT 2	PIER 1	PIER 2	PIER 3	SUPERSTRUCTURE	TOTAL
212001-000	STRUCTURE EXCAVATION	CY	200	200	-	-	-	-	400
212005-000	SELECT MATERIAL FOR BACKFILLING	CY	70	70	-	-	-	-	140
218004-001	8 INCH CRUSHED ROCK SLOPE PROTECTION	SY	600	650	-	-	-	-	1,250
601002-001	CLASS B CONCRETE	CY	93	93	144	153	150	-	633
601009-001	CLASS H CONCRETE **	CY	-	-	-	-	-	1,969	1,969
601009-003	CLASS H CONCRETE, ARCHITECTURAL	CY	-	-	-	-	-	101	101
601014-001	TEST SLAB	LS	-	-	-	-	-	-	1
602001-001	REINFORCING STEEL BAR	LB	726	726	38,119	33,677	39,291	-	112,539
602002-001	EPOXY COATED REINFORCING STEEL BAR	LB	16,075	16,075	-	-	-	315,799	347,949
615001-001	STEEL SUPERSTRUCTURE	LS	-	-	-	-	-	1	1
615028-001	GUIDED BEARING	EA	-	-	8	-	8	-	16
615029-001	NON-GUIDED BEARING	EA	8	8	-	-	-	-	16
615030-001	FIXED BEARING	EA	-	-	-	8	-	-	8
617003-001	ALUMINUM RAILING, ANODIZED	LF	-	-	-	-	-	1,305	1,305
625001-016	48 INCH DIAMETER DRILLED CAISSONS	LF	188	221	-	-	-	-	409
625001-020	60 INCH DIAMETER DRILLED CAISSONS	LF	-	-	65	58	69	-	192
625003-014	42 INCH ROCK SOCKET FOUNDATION	LF	43	46	-	-	-	-	89
625003-018	54 INCH ROCK SOCKET FOUNDATION	LF	-	-	50	56	55	-	161
625004-020	60 INCH DRILLED CAISSON TEST HOLE	LS	-	-	-	-	-	-	1
639001-001	CONSTRUCTION LAYOUT STAKE	LS	-	-	-	-	-	-	1
662002-001	GALVANIZED STEEL CONDUIT	LS	-	-	-	-	-	1	1
662006-001	JUNCTION BOX, TYPE A (MODIFIED)	EA	-	-	-	-	-	4	4

** QUANTITY FOR "CLASS H CONCRETE" IS BASED UPON AN 8" THICK REINFORCED CONCRETE DECK SLAB, PLUS A UNIFORM THICKNESS OF 1 1/2 INCHES WAS ASSUMED TO INCLUDE THE EXTRA CONCRETE TO FILL STAY-IN-PLACE FORM FLUTES. NO EXTRA COMPENSATION WILL BE PAID TO FILL THESE FLUTES.

ITEM 615001-001 INCLUDES *

DESCRIPTION	UNIT	QUANTITY
AASHTO M270 GRADE 50W STEEL	LB	1,182,000
AASHTO M270 GRADE HPS70W STEEL	LB	236,000
STUD SHEAR CONNECTORS	EA	12,276
DRAINAGE SCUPPERS	EA	24

* FOR INFORMATION ONLY.

NO.	REVISION	BY	DATE

GENERAL NOTES & ESTIMATED QUANTITIES

WEST VIRGINIA DEPARTMENT OF TRANSPORTATION
US 220 RAMP CONNECTOR BRIDGE
BRIDGE NO 10445
HARDY COUNTY, WEST VIRGINIA

L.A. GATES COMPANY
ENGINEERS AND CONSULTANTS
BECKLEY, WEST VIRGINIA
ROANOKE, VIRGINIA

SHEET NO. S3

DESIGNER	DRAWN	CHECKED	DATE	SCALE	REVISIONS
GPH	RWR	JFM	SEP '03	NONE	

CADD FILE NAME: ESTOFQTY-113
PLOT SCALE: 1=1

PUBLIC ROADS DIV.	STATE DIST. NO.	STATE PROJ. NO.	FEDERAL PROJ. NO.	FISCAL YEAR	COUNTY	SHEET NO.	TOTAL SHEETS
W.V.	5	X316 -H- 100.40	APD-0484-(251)C	2003	HARDY	321	670

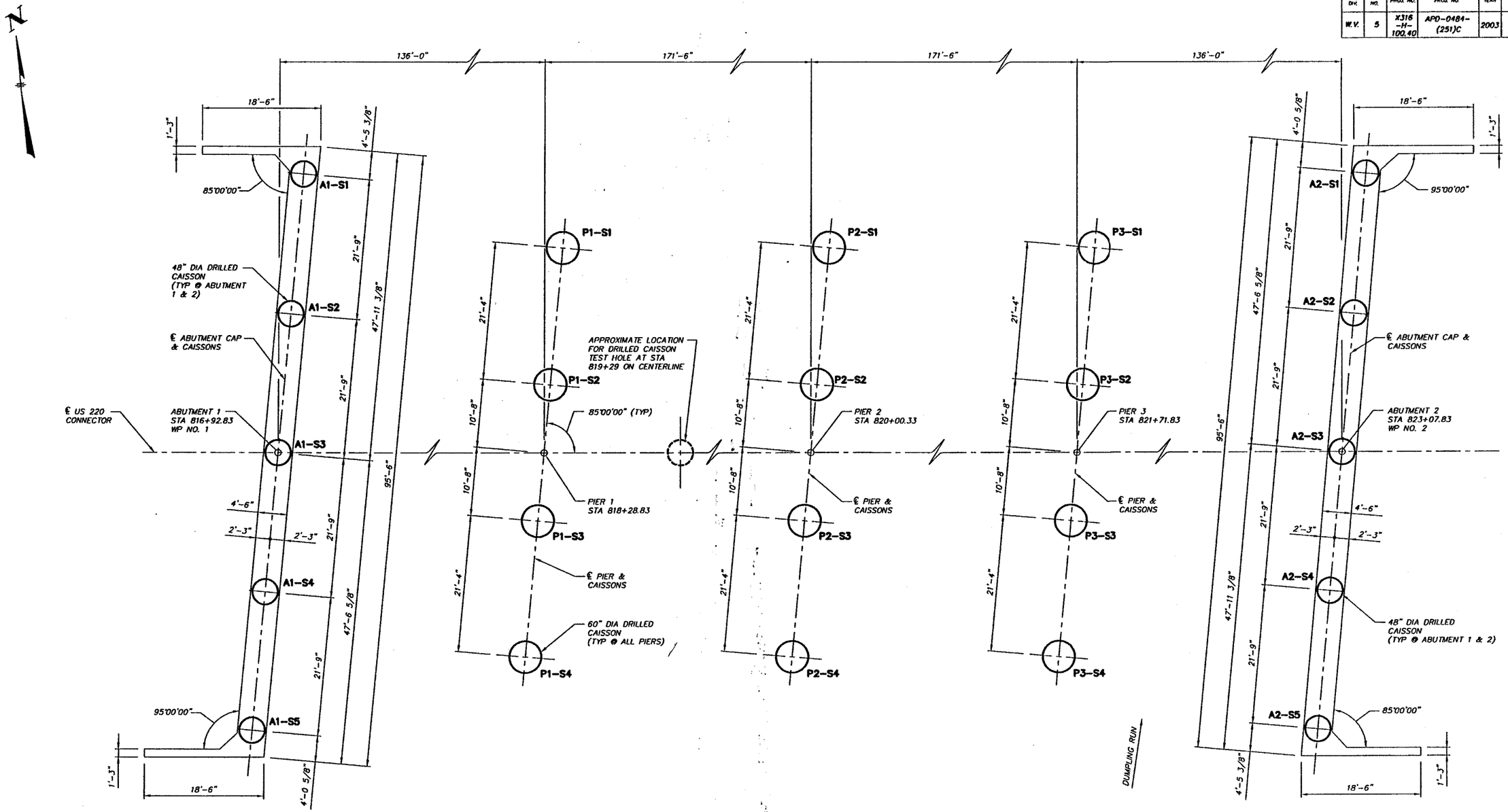

PLAN
SCALE: 1/8" = 1'-0"

COORDINATES (FT)		
	NORTHING	EASTING
WP NO. 1	210,341.0726	2,121,985.6548
WP NO. 2	210,272.1637	2,122,596.7820

FOUNDATION LAYOUT

WEST VIRGINIA DEPARTMENT OF TRANSPORTATION
US 220 RAMP CONNECTOR BRIDGE
BRIDGE NO 10445
HARDY COUNTY, WEST VIRGINIA

L.A. GATES COMPANY
ENGINEERS AND CONSULTANTS
BECKLEY, WEST VIRGINIA
ROANOKE, VIRGINIA

SHEET NO. **S4**

NO.	REVISION	BY	DATE

DESIGNER	DRAWN	CHECKED	DATE	SCALE	REVISIONS
JFM	RWR	GPH	SEP '03	SHOWN	

CADD FILE NAME: FOUNDLAYOUT-113
PLOT SCALE: 1=1

PUBLIC ROADS DIV.	STATE DIST. NO.	STATE PROJ. NO.	FEDERAL PROJ. NO.	FISCAL YEAR	COUNTY	SHEET NO.	TOTAL SHEETS
W.V.	5	X316 -H- 100.40	APD-0484- (251)C	2003	HARDY	322	670

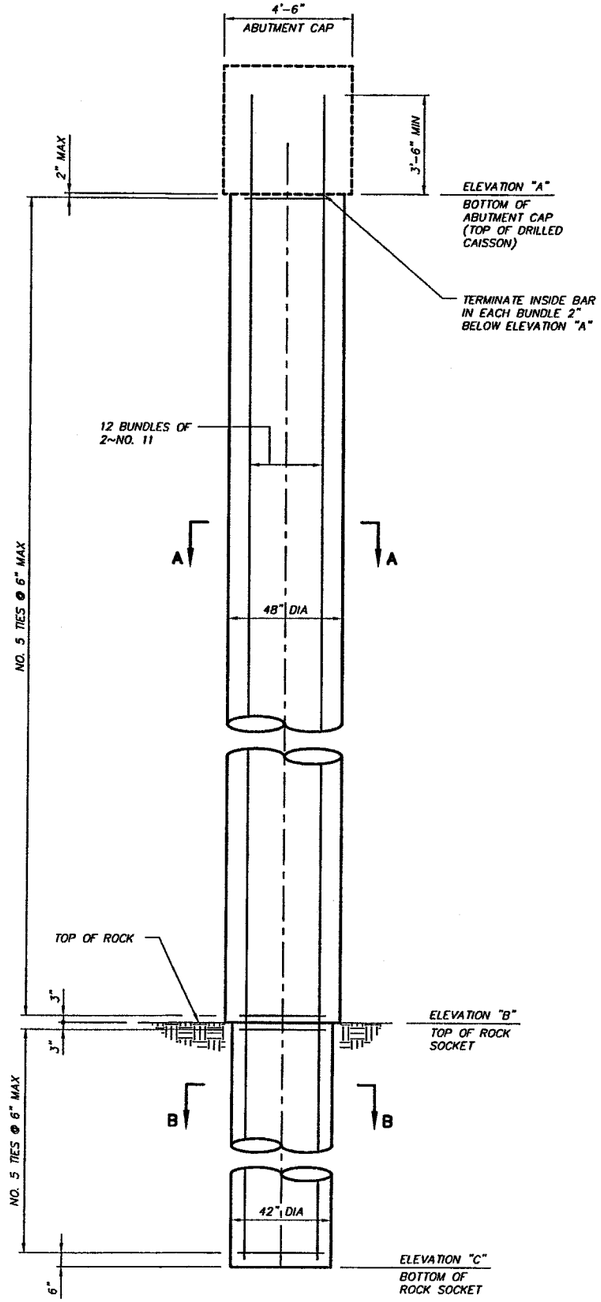

DRILLED CAISSONS AT ABUTMENTS
SCALE: 3/8" = 1'-0"

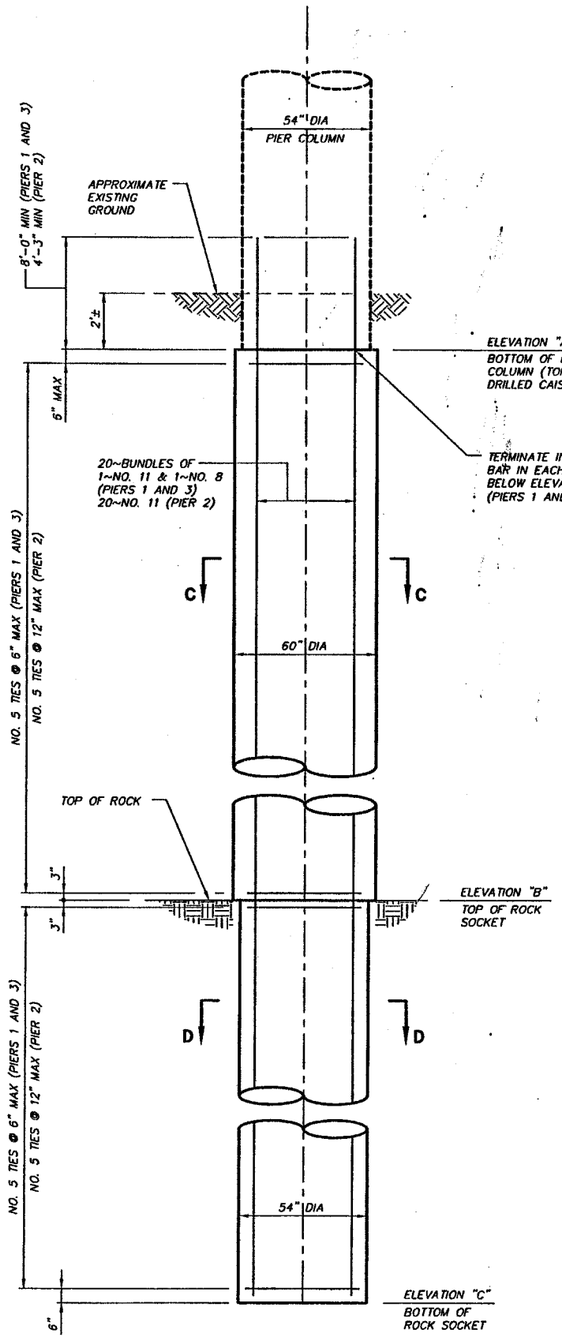

DRILLED CAISSONS AT PIERS
SCALE: 3/8" = 1'-0"

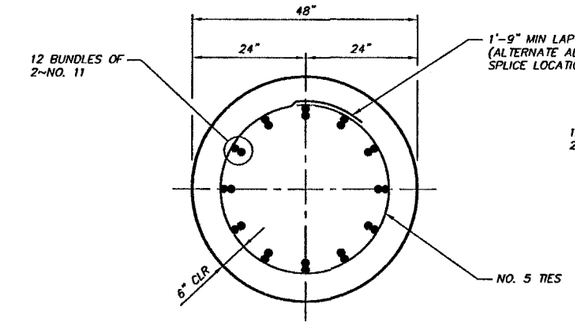

SECTION A-A
SCALE: 3/4" = 1'-0"

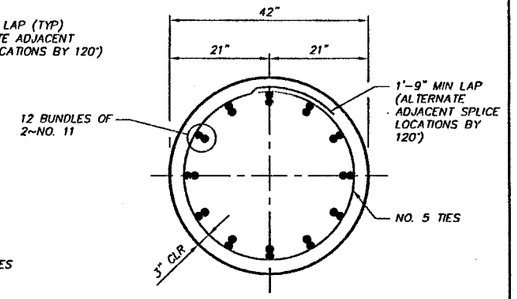

SECTION B-B
SCALE: 3/4" = 1'-0"

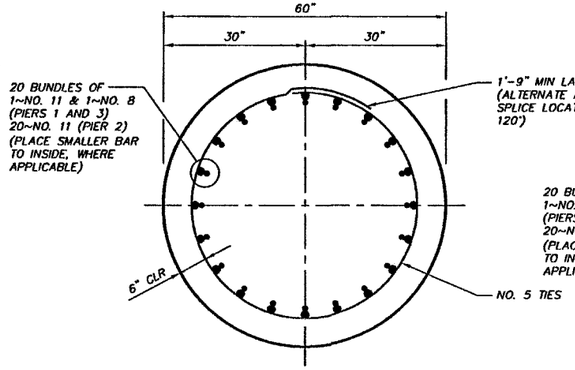

SECTION C-C
SCALE: 3/4" = 1'-0"

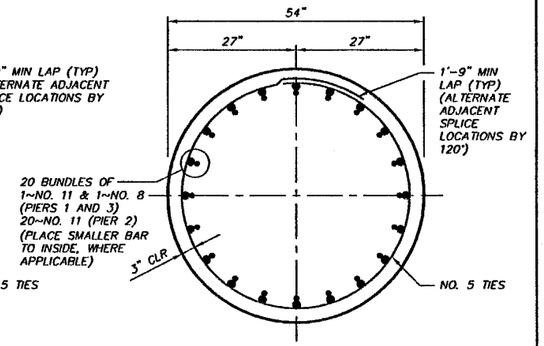

SECTION D-D
SCALE: 3/4" = 1'-0"

DRILLED CAISSONS

LOCATION	DRILLED CAISSON NO.	ELEVATION "A"	ELEVATION *"B"	ELEVATION "C"
ABUTMENT 1	A1 - S1	819.90	783.2	775.0
	A1 - S2	819.90	782.8	777.0
	A1 - S3	819.90	781.3	774.0
	A1 - S4	819.90	782.3	771.0
	A1 - S5	819.90	781.9	772.0
PIER 1	P1 - S1	798.00	781.6	764.0
	P1 - S2	798.00	782.1	772.0
	P1 - S3	798.00	781.4	771.0
	P1 - S4	798.00	781.7	770.0
PIER 2	P2 - S1	796.00	781.9	766.0
	P2 - S2	796.00	781.0	768.5
	P2 - S3	796.00	781.7	768.0
	P2 - S4	796.00	781.9	768.5
PIER 3	P3 - S1	799.00	781.9	768.5
	P3 - S2	799.00	781.6	766.5
	P3 - S3	799.00	782.2	770.5
	P3 - S4	799.00	781.8	767.5
ABUTMENT 2	A2 - S1	826.05	782.0	773.5
	A2 - S2	826.05	782.5	773.0
	A2 - S3	826.05	781.3	773.0
	A2 - S4	826.05	781.6	771.0
	A2 - S5	826.05	781.8	772.5

* ELEVATIONS BASED ON PREINSTALLATION CORE HOLE DATA.

NOTES:

SEE FOUNDATION LAYOUT ON SHEET S4 FOR DRILLED CAISSON LOCATIONS.

PREINSTALLATION CORE HOLES ARE PROVIDED AS PART OF THESE CONTRACT DRAWINGS. THEREFORE, THIS ITEM OF WORK WILL NOT BE REQUIRED.

A SINGLE 60" DIAMETER TEST HOLE SHALL BE DRILLED TO EL 781.0. THE TEST HOLE SHALL INCLUDE A 54" DIAMETER ROCK SOCKET DRILLED FROM EL 781.0 TO EL 771.0. THE TEST HOLE SHALL BE REINFORCED SIMILAR TO ACTUAL SHAFTS AND LOCATED AS SHOWN ON SHEET S4, ± 1 FOOT. CROSSHOLE SONIC LOGGING OF THE TEST HOLE IS REQUIRED.

SEE DRILLED CAISSONS GENERAL NOTES, SHEET S2 FOR OTHER REQUIREMENTS.

NO.	REVISION	BY	DATE

DRILLED CAISSONS

WEST VIRGINIA DEPARTMENT OF TRANSPORTATION
US 220 RAMP CONNECTOR BRIDGE
BRIDGE NO 10445
HARDY COUNTY WEST VIRGINIA

L.A. GATES COMPANY
ENGINEERS AND CONSULTANTS
BECKLEY, WEST VIRGINIA
ROANOKE, VIRGINIA

SHEET NO. S5

DESIGNER	DRAWN	CHECKED	DATE	SCALE	REVISIONS
JFM/GPH	RWR	GPH	SEP '03	SHOWN	

CADD FILE NAME: CAISSONDTLS-13
PLOT SCALE: 1=1

PUBLIC ROADS DIV.	STATE DIST. NO.	STATE PROJ. NO.	FEDERAL PROJ. NO.	FISCAL YEAR	COUNTY	SHEET NO.	TOTAL SHEETS
W.V.	5	X316 -H- 100.40	APD-0484-(251)C	2003	HARDY	323	670

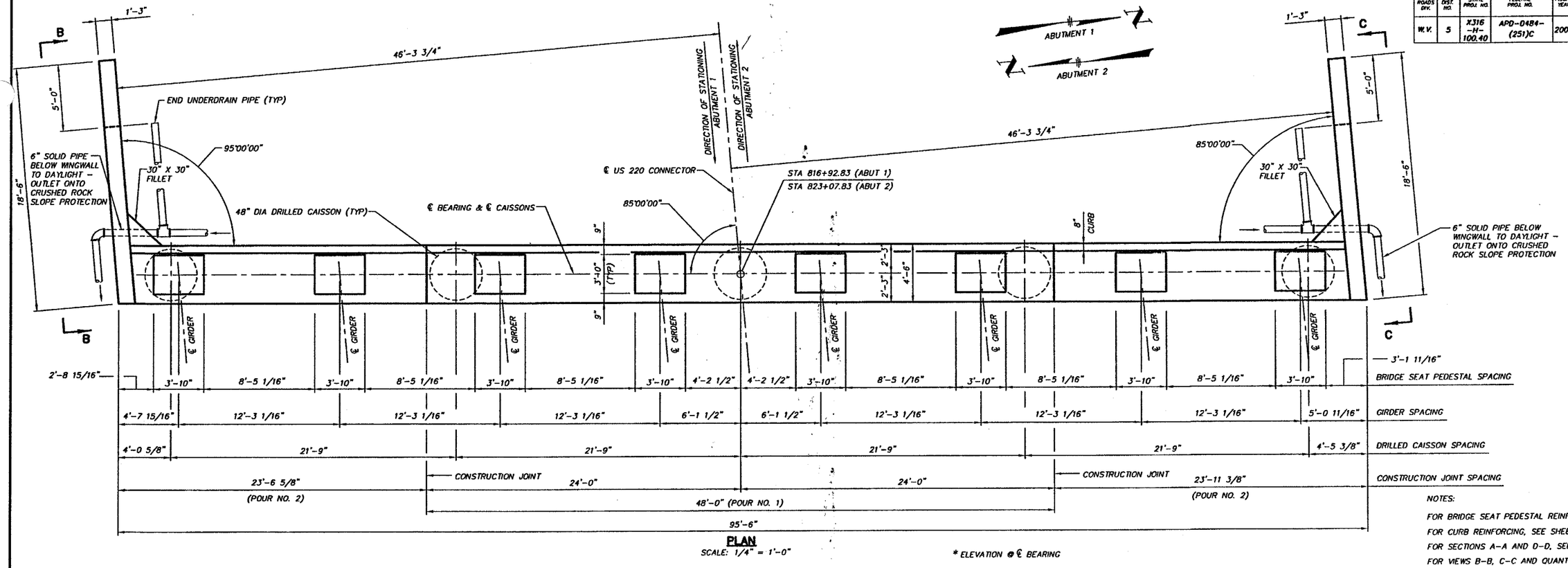

PLAN
SCALE: 1/4" = 1'-0"

* ELEVATION @ ℄ BEARING

NOTES:

FOR BRIDGE SEAT PEDESTAL REINFORCING, SEE SHEET S8.
FOR CURB REINFORCING, SEE SHEET S8.
FOR SECTIONS A-A AND D-D, SEE SHEET S8.
FOR VIEWS B-B, C-C AND QUANTITIES, SEE SHEET S7.
FOR REINFORCING BAR SCHEDULE, SEE SHEET S9.
FOR DRILLED CAISSON DETAILS, SEE SHEET S5.

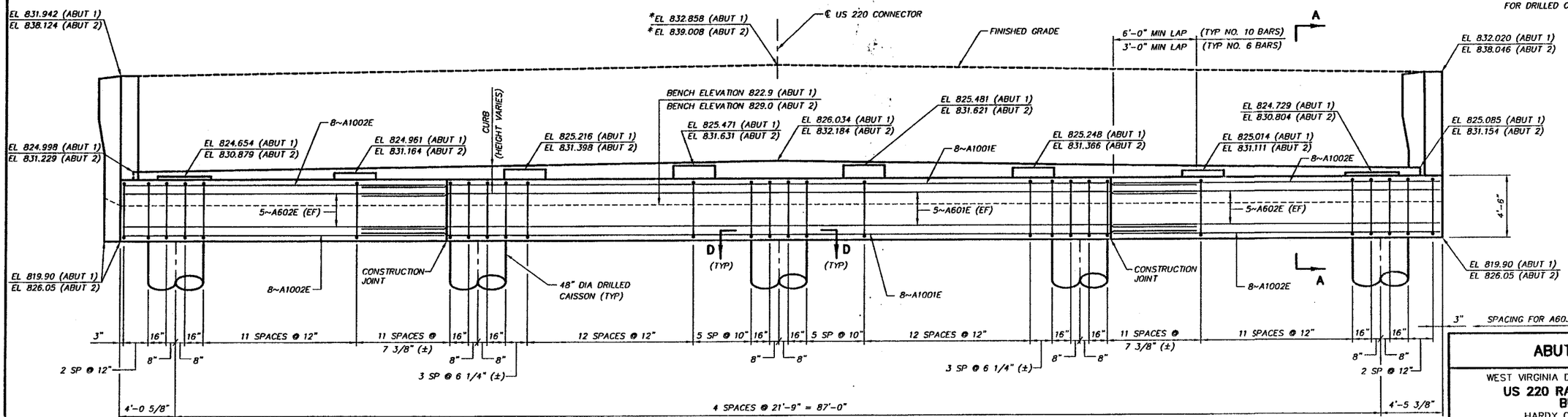

ELEVATION
SCALE: 1/4" = 1'-0"

NO.	REVISION	BY	DATE

ABUTMENTS 1 AND 2

WEST VIRGINIA DEPARTMENT OF TRANSPORTATION
US 220 RAMP CONNECTOR BRIDGE
BRIDGE NO 10445
HARDY COUNTY WEST VIRGINIA

L.A. GATES COMPANY
ENGINEERS AND CONSULTANTS
BECKLEY, WEST VIRGINIA
ROANOKE, VIRGINIA

SHEET NO. S6

DESIGNER	DRAWN	CHECKED	DATE	SCALE	REVISIONS
GPH	JIH	BMB	SEP '03	SHOWN	

CADD FILE NAME: ABUTMENT1&2-113
PLOT SCALE: 1=1

PUBLIC ROADS DIV.	STATE DIST. NO.	STATE PROJ. NO.	FEDERAL PROJ. NO.	FISCAL YEAR	COUNTY	SHEET NO.	TOTAL SHEETS
W.V.	5	X316 -H- 100.40	APD-0484- (251)C	2003	HARDY	324	670

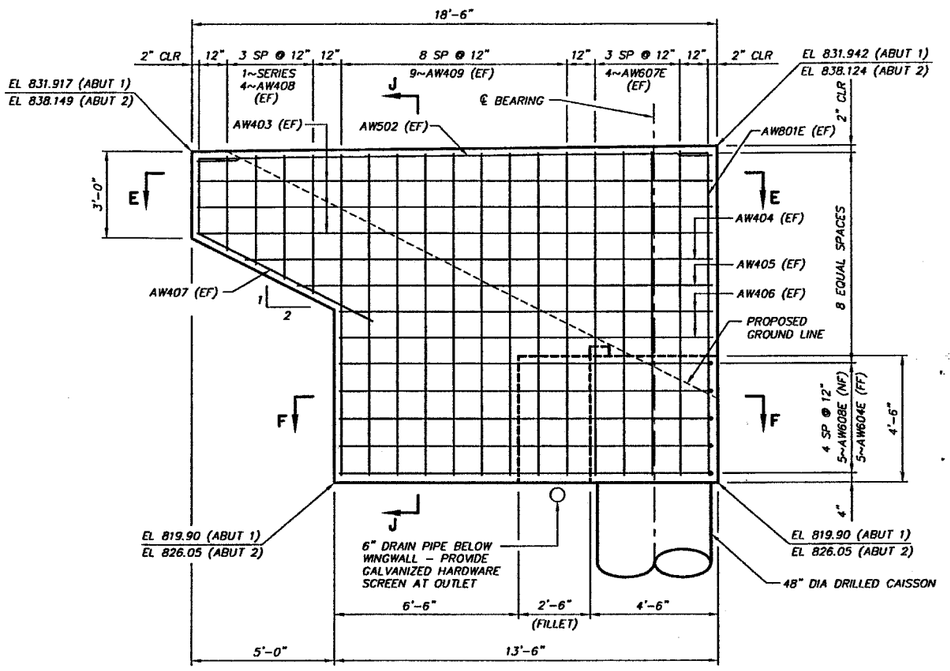

VIEW B–B
SCALE: 3/8" = 1'-0"

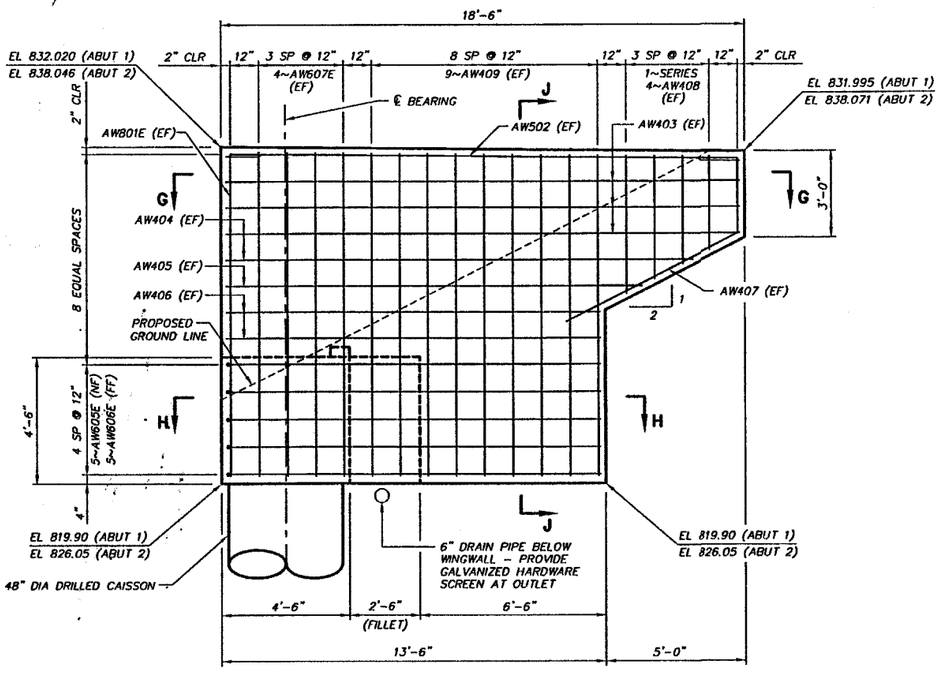

VIEW C–C
SCALE: 3/8" = 1'-0"

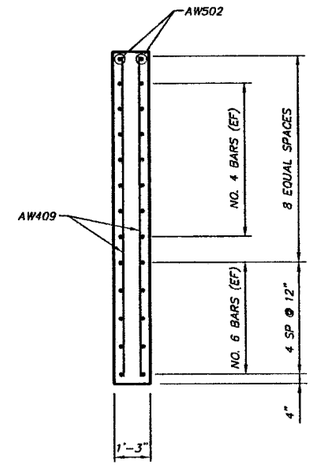

SECTION J–J
SCALE: 3/8" = 1'-0"

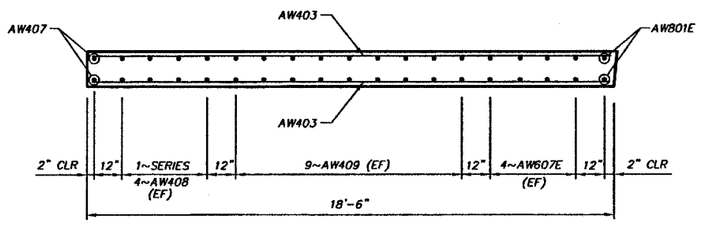

SECTION E–E
SCALE: 3/8" = 1'-0"

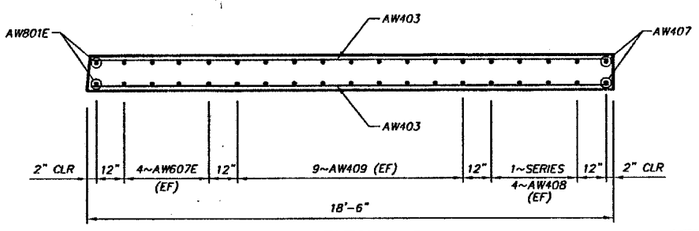

SECTION G–G
SCALE: 3/8" = 1'-0"

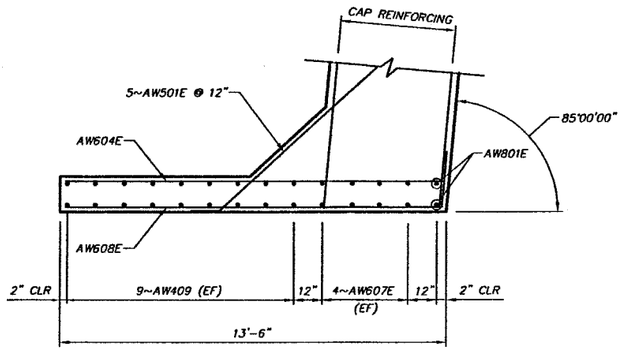

SECTION F–F
SCALE: 3/8" = 1'-0"

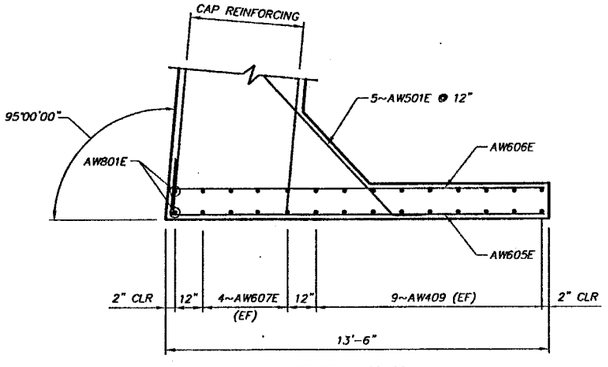

SECTION H–H
SCALE: 3/8" = 1'-0"

ESTIMATE OF QUANTITIES – ABUTMENTS

ITEM NO	DESCRIPTION	UNIT	QUANTITY		
			ABUTMENT 1	ABUTMENT 2	TOTAL
212001-000	STRUCTURE EXCAVATION	CY	200	200	400
212005-000	SELECT MATERIAL FOR BACKFILLING	CY	70	70	140
601002-001	CLASS B CONCRETE	CY	93	93	633
602001-001	REINFORCING STEEL BAR	LB	726	726	1,452
602002-001	EPOXY COATED REINFORCING STEEL BAR	LB	16,075	16,075	32,150
625001-016	48 INCH DIAMETER DRILLED CAISSONS	LF	188	221	409
625003-014	42 INCH ROCK SOCKET FOUNDATION	LF	43	46	89

NO.	REVISION	BY	DATE

ABUTMENT WINGWALLS

WEST VIRGINIA DEPARTMENT OF TRANSPORTATION
US 220 RAMP CONNECTOR BRIDGE
BRIDGE NO 10445
HARDY COUNTY WEST VIRGINIA

L.A. GATES COMPANY
ENGINEERS AND CONSULTANTS
BECKLEY, WEST VIRGINIA
ROANOKE, VIRGINIA

SHEET NO. S7

DESIGNER	DRAWN	CHECKED	DATE	SCALE	REVISIONS
GPH	JIH	BMB	SEP '03	SHOWN	

CADD FILE NAME: ABUTMENT WINGWALLS-113
PLOT SCALE: 1=1

PUBLIC ROADS DIV.	STATE DIST. NO.	STATE PROJ. NO.	FEDERAL PROJ. NO.	FISCAL YEAR	COUNTY	SHEET NO.	TOTAL SHEETS
W.V.	5	X316 -H- 100.40	APD-0484- (251)C	2003	HARDY	325	670

NOTE:

THE COSTS FOR ENGINEERING FABRIC AND UNDERDRAIN/OUTFALL SYSTEMS SHALL BE INCLUDED IN BID ITEM 212005-000, "SELECT MATERIAL FOR BACKFILLING".

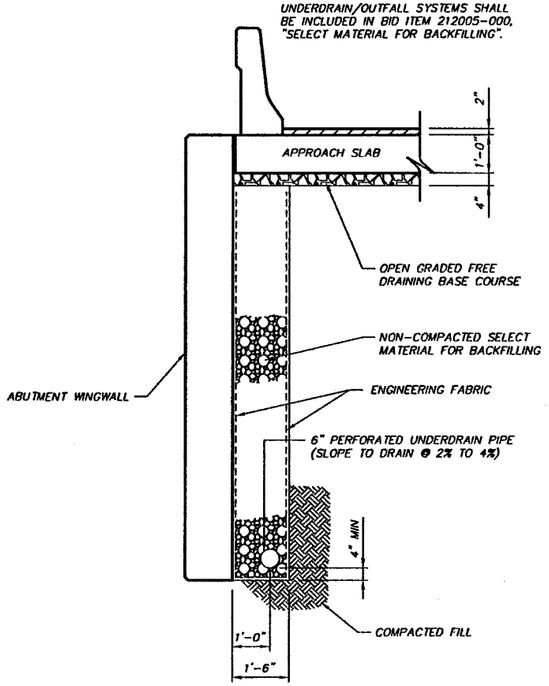

BACKFILLING DETAIL ALONG WINGWALL
SCALE: 1/2" = 1'-0"

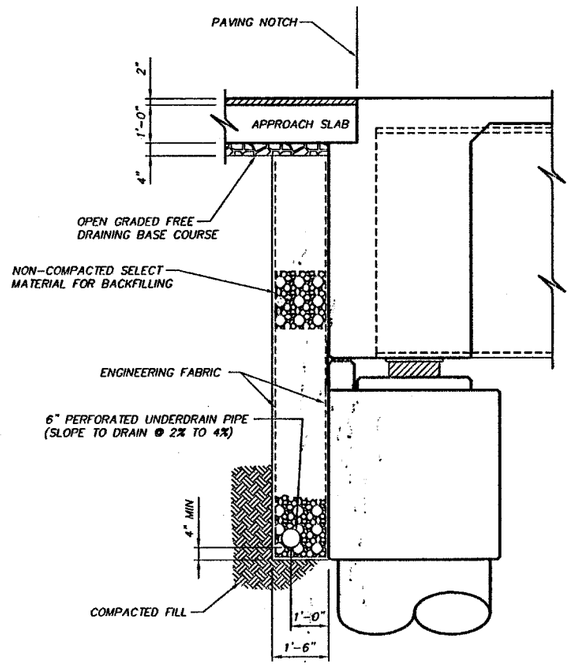

BACKFILLING DETAIL BEHIND ABUTMENT
SCALE: 1/2" = 1'-0"

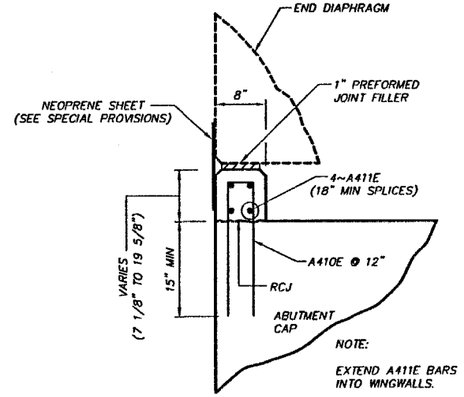

NOTE:

EXTEND A411E BARS INTO WINGWALLS.

DETAIL "Z"
SCALE: 1" = 1'-0"

NOTE:

FOR SECTION A-A AND D-D LOCATIONS, SEE SHEET S6.

NOTE:

ADJUST POSITIONING OF A1001E AND A1002E BARS AS REQUIRED TO FIT FIELD CONDITIONS.

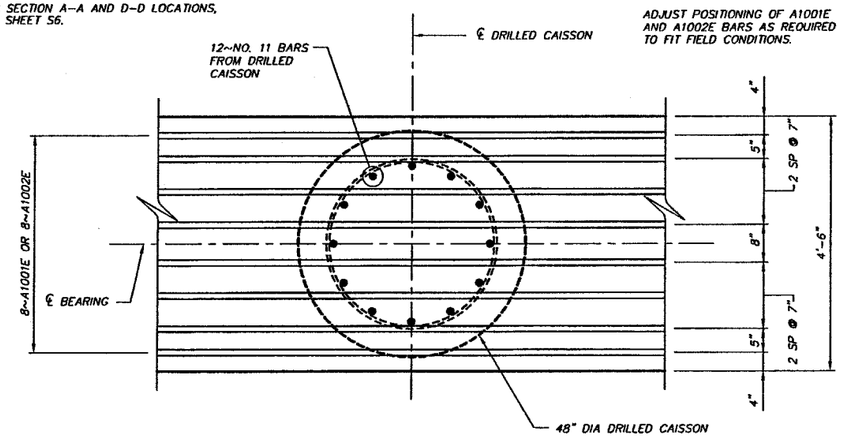

SECTION D-D
SCALE: 3/4 " =1'-0"

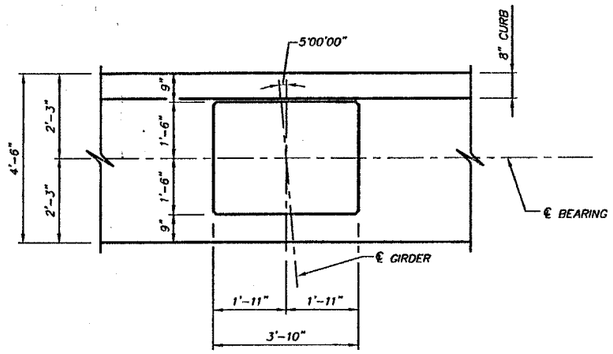

PLAN

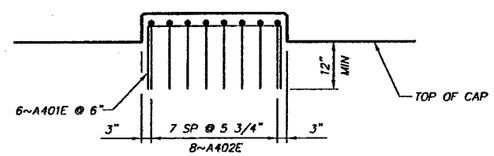

ELEVATION

BRIDGE SEAT PEDESTALS
SCALE: 1/2" = 1'-0"

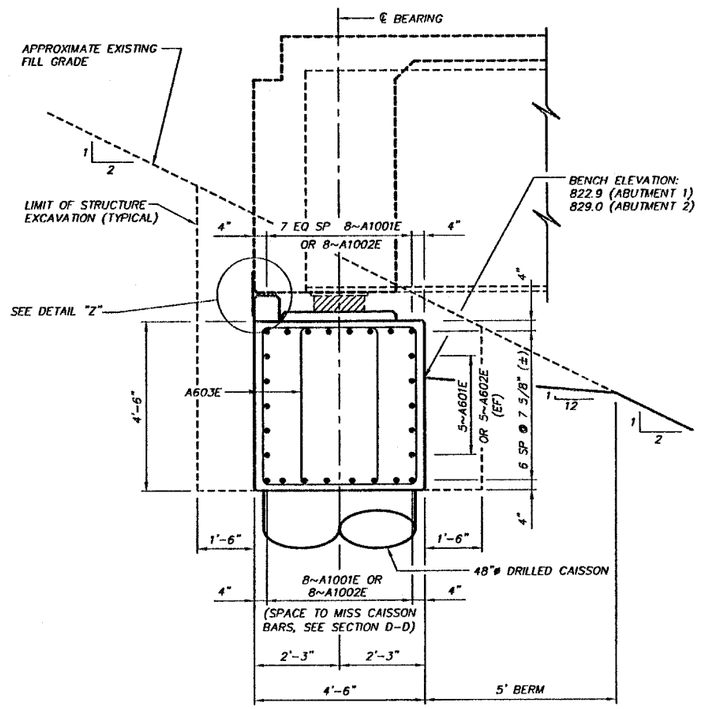

SECTION A-A
SCALE: 1/2" = 1'-0"

NO.	REVISION	BY	DATE

ABUTMENT DETAILS

WEST VIRGINIA DEPARTMENT OF TRANSPORTATION
US 220 RAMP CONNECTOR BRIDGE
BRIDGE NO 10445
HARDY COUNTY WEST VIRGINIA

L.A. GATES COMPANY
ENGINEERS AND CONSULTANTS
BECKLEY, WEST VIRGINIA
ROANOKE, VIRGINIA

SHEET NO. S8

DESIGNER	DRAWN	CHECKED	DATE	SCALE	REVISIONS
GPH	JIH	BMB	SEP '03	SHOWN	

CADD FILE NAME: ABUTMENT DETAILS-113
PLOT SCALE: 1=1

PUBLIC ROADS DIV.	STATE DIST. NO.	STATE PROJ. NO.	FEDERAL PROJ. NO.	FISCAL YEAR	COUNTY	SHEET NO.	TOTAL SHEETS
W.V.	5	X316 -H- 100.40	APD-0484-(251)C	2003	HARDY	326	670

ABUTMENT CAPS (INCLUDES PEDESTALS AND CURB)

MARK	TYPE	NO. REQUIRED ABUTMENT 1	NO. REQUIRED ABUTMENT 2	LENGTH	DIMENSIONS A	B	C	D	COMMENTS
A401E	4	48	48	7'-6"	3'-6"	2'-0"	2'-0"		PEDESTALS
A402E	4	64	64	6'-8"	2'-8"	2'-0"	2'-0"		PEDESTALS
A410E	4	93	93	5'-10"	0'-4"	2'-9"	2'-9"		CURB
A411E	STR	12	12	33'-0"					CURB
A601E	STR	10	10	54'-6"					CAP
A602E	STR	20	20	23'-5"					CAP
A603E	14	208	208	16'-4"	4'-2"	3'-0"	1'-0"		CAP
A1001E	STR	16	16	60'-0"					CAP
A1002E	STR	32	32	23'-5"					CAP

ABUTMENT WINGWALLS

MARK	TYPE	NO. REQUIRED ABUTMENT 1	NO. REQUIRED ABUTMENT 2	LENGTH	DIMENSIONS A	B	C	D	E	COMMENTS
AW403	STR	12	12	18'-2"						
AW404	STR	4	4	16'-6"						
AW405	STR	4	4	14'-10"						
AW406	STR	8	8	13'-2"						
AW407	5	4	4	10'-6"	1'-0"	2'-9"	6'-9"	6'-0"	3'-0"	
AW408	STR	4 SETS OF 4	4 SETS OF 4	2'-9" to 4'-9"						
AW409	STR	36	36	11'-9"						
AW501E	2	10	10	8'-11"	7'-0"	1'-11"	1'-4"	1'-4"		
AW502	STR	4	4	18'-2"						
AW604E	STR	5	5	13'-3"						
AW605E	3	5	5	15'-2"	13'-2"	2'-0"	0'-2"	2'-0"		
AW606E	STR	5	5	13'-1"						
AW607E	STR	16	16	11'-9"						
AW608E	2	5	5	15'-2"	13'-2"	2'-0"	0'-2"	2'-0"		
AW801E	1	4	4	13'-3"	11'-9"	1'-6"				

REINFORCING BAR SETS:

AW408: 4~SETS, 4 BARS EACH SET; VARY LENGTH BY 8" PER BAR.

BAR BENDING DIAGRAMS

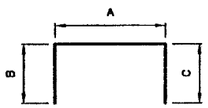

TYPE 4

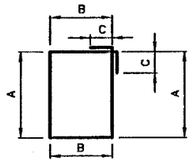

TYPE 14

BAR BENDING DIAGRAMS

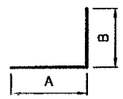

TYPE 1

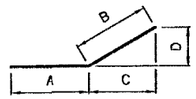

TYPE 2

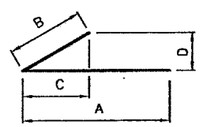

TYPE 3

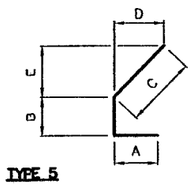

TYPE 5

NOTES:

ALL DIMENSIONS ARE OUT-TO-OUT OF BARS.

NO CORRECTION IN LENGTH IS TO BE MADE FOR BEND CURVATURES.

THE FIRST DIGIT FOLLOWING PREFIX INDICATES BAR SIZE.
EXAMPLE: S501E = NO. 5 BAR

BARS WITH E SUFFIX INDICATE EPOXY COATED BARS.

NO.	REVISION	BY	DATE

REINFORCING BAR SCHEDULE – ABUTMENTS

WEST VIRGINIA DEPARTMENT OF TRANSPORTATION
US 220 RAMP CONNECTOR BRIDGE
BRIDGE NO 10445
HARDY COUNTY, WEST VIRGINIA

L.A. GATES COMPANY
ENGINEERS AND CONSULTANTS
BECKLEY, WEST VIRGINIA
ROANOKE, VIRGINIA

SHEET NO. **S9**

DESIGNER	DRAWN	CHECKED	DATE	SCALE	REVISIONS
GPH	JIH	BMB	SEP '03	SHOWN	

CADD FILE NAME: ABUT 1 & 2 BAR LIST-113
PLOT SCALE: 1=1

PUBLIC ROADS DIV.	STATE DIST. NO.	STATE PROJ. NO.	FEDERAL PROJ. NO.	FISCAL YEAR	COUNTY	SHEET NO.	TOTAL SHEETS
W.V.	5	X316 -H- 100.40	APD-0484-(251)C	2003	HARDY	327	670

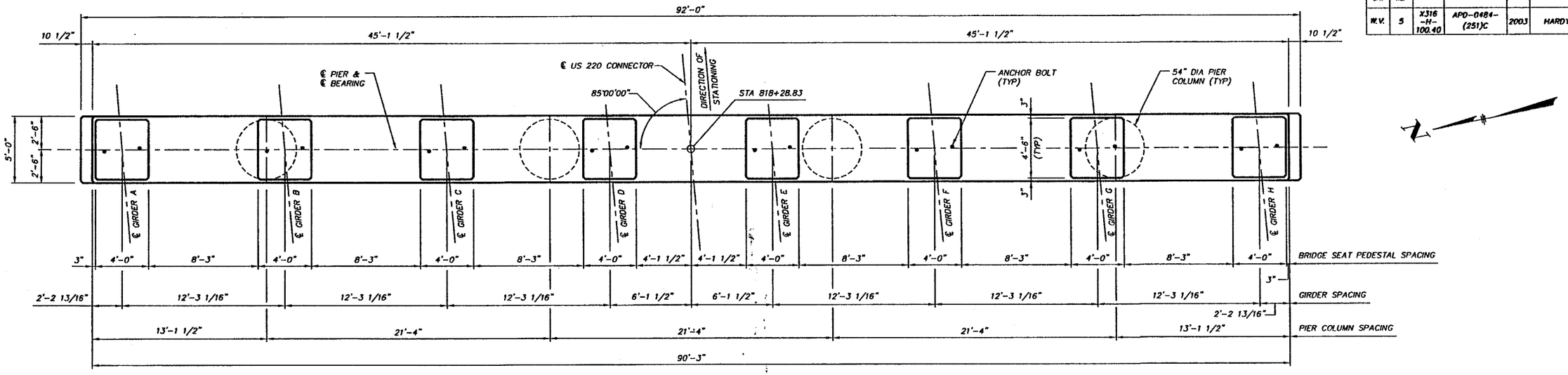

PLAN
SCALE: 1/4" = 1'-0"

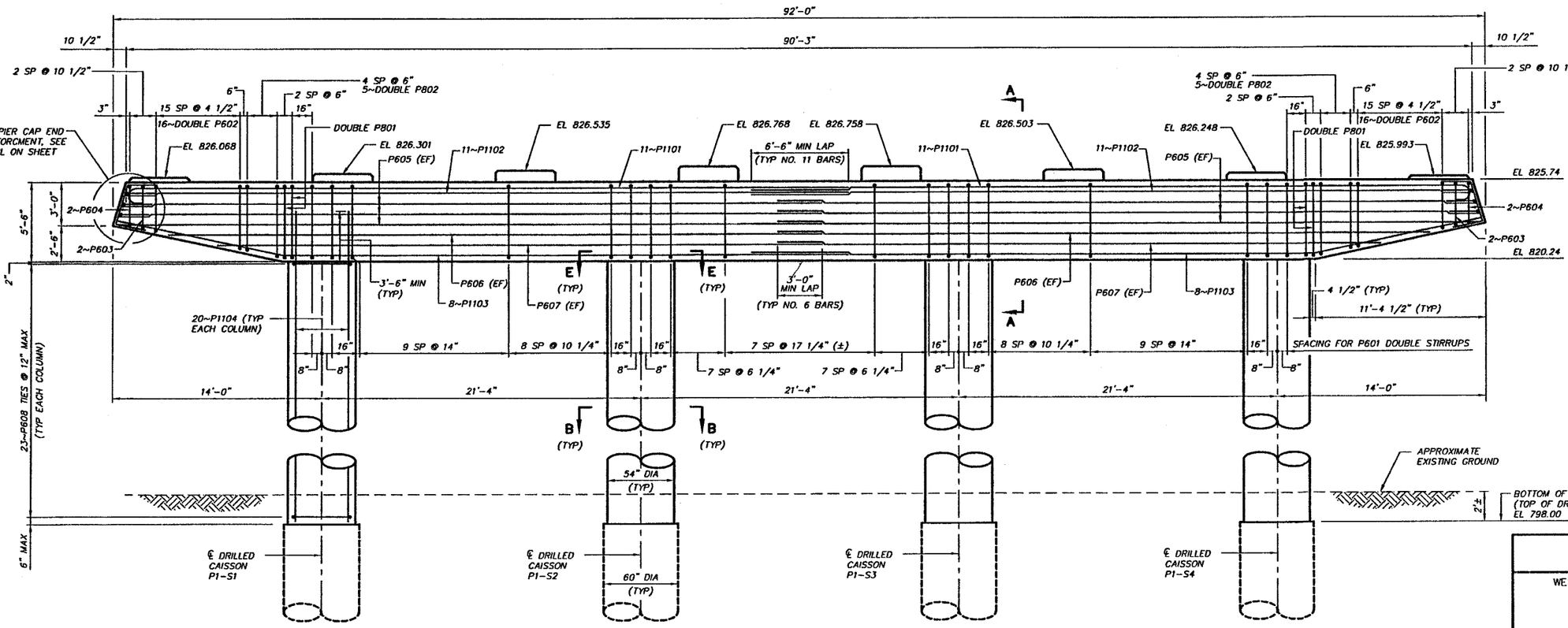

ELEVATION
SCALE: 1/4" = 1'-0"

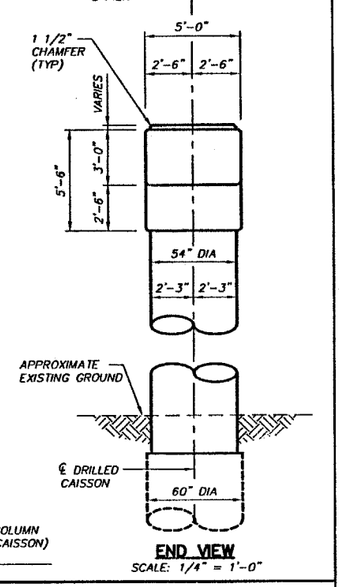

END VIEW
SCALE: 1/4" = 1'-0"

NOTES:

FOR BRIDGE SEAT PEDESTAL LAYOUT AND REINFORCING, ANCHOR BOLT LAYOUT, SECTION A-A, SECTION B-B, SECTION E-E, AND QUANTITIES, SEE SHEET S13.

FOR REINFORCING BAR SCHEDULE, SEE SHEET S14.

FOR DRILLED CAISSON DETAILS, SEE SHEET S5.

NO.	REVISION	BY	DATE

PIER 1

WEST VIRGINIA DEPARTMENT OF TRANSPORTATION
US 220 RAMP CONNECTOR BRIDGE
BRIDGE NO 10445
HARDY COUNTY WEST VIRGINIA

L.A. GATES COMPANY
ENGINEERS AND CONSULTANTS
BECKLEY, WEST VIRGINIA
ROANOKE, VIRGINIA

SHEET NO. **S10**

DESIGNER	DRAWN	CHECKED	DATE	SCALE	REVISIONS
JFM	RWR/JRH	GPH	SEP '03	SHOWN	

CADD FILE NAME: PIER1-113
PLOT SCALE: 1=1

PUBLIC ROADS DIV	STATE DIST. NO.	STATE PROJ. NO.	FEDERAL PROJ. NO.	FISCAL YEAR	COUNTY	SHEET NO.	TOTAL SHEETS
W.V.	5	X316 -H- 100.40	APD-0484- (251)C	2003	HARDY	328	670

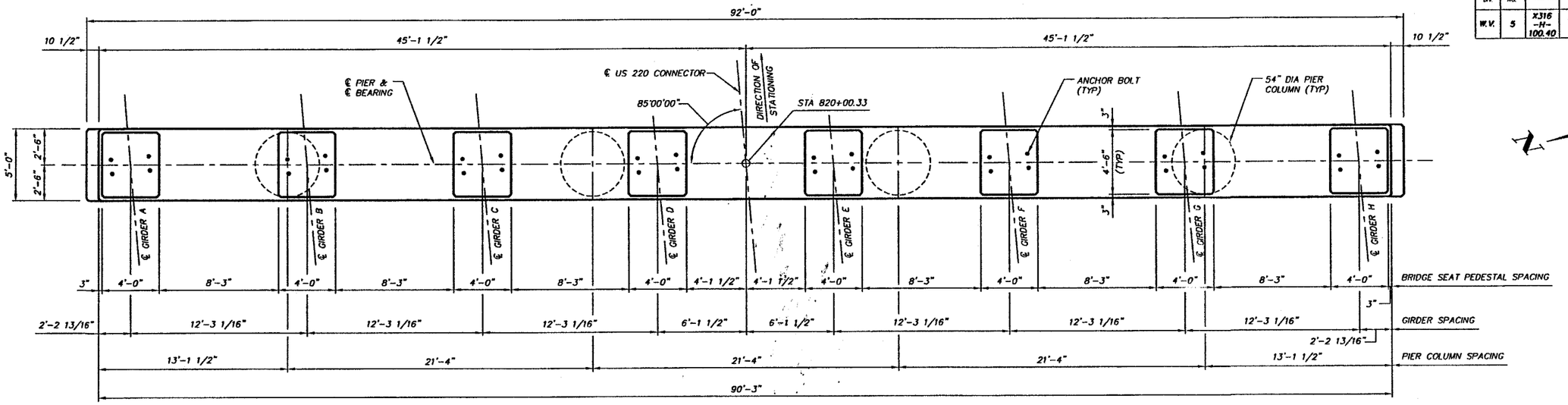

PLAN
SCALE: 1/4" = 1'-0"

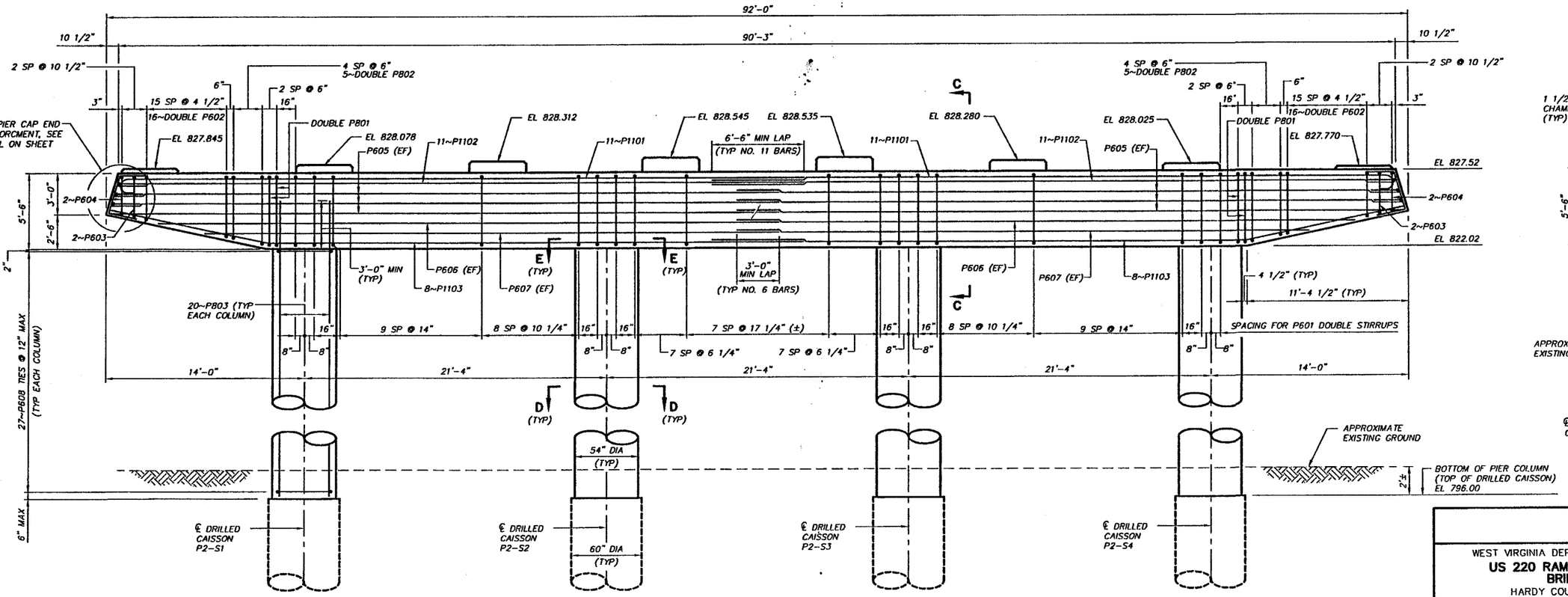

ELEVATION
SCALE: 1/4" = 1'-0"

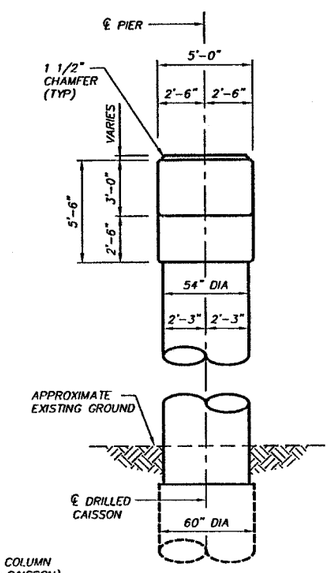

END VIEW
SCALE: 1/4" = 1'-0"

NOTES:

FOR BRIDGE SEAT PEDESTAL LAYOUT AND REINFORCING, ANCHOR BOLT LAYOUT, SECTION C-C, SECTION D-D, SECTION E-E, AND QUANTITIES, SEE S13.

FOR REINFORCING BAR SCHEDULE, SEE SHEET S14.

FOR DRILLED CAISSON DETAILS, SEE SHEET S5.

NO.	REVISION	BY	DATE

PIER 2

WEST VIRGINIA DEPARTMENT OF TRANSPORTATION
US 220 RAMP CONNECTOR BRIDGE
BRIDGE NO 10445
HARDY COUNTY WEST VIRGINIA

L.A. GATES COMPANY
ENGINEERS AND CONSULTANTS
BECKLEY, WEST VIRGINIA
ROANOKE, VIRGINIA

SHEET NO. **S11**

DESIGNER	DRAWN	CHECKED	DATE	SCALE	REVISIONS
JFM	RWR/JIH	GPH	SEP '03	SHOWN	

CADD FILE NAME: PIER2-113
PLOT SCALE: 1=1

PUBLIC ROADS DIV.	STATE DIST. NO.	STATE PROJ. NO.	FEDERAL PROJ. NO.	FISCAL YEAR	COUNTY	SHEET NO.	TOTAL SHEETS
W.V.	5	X316 -H- 100.40	APD-0484-(251)C	2003	HARDY	329	670

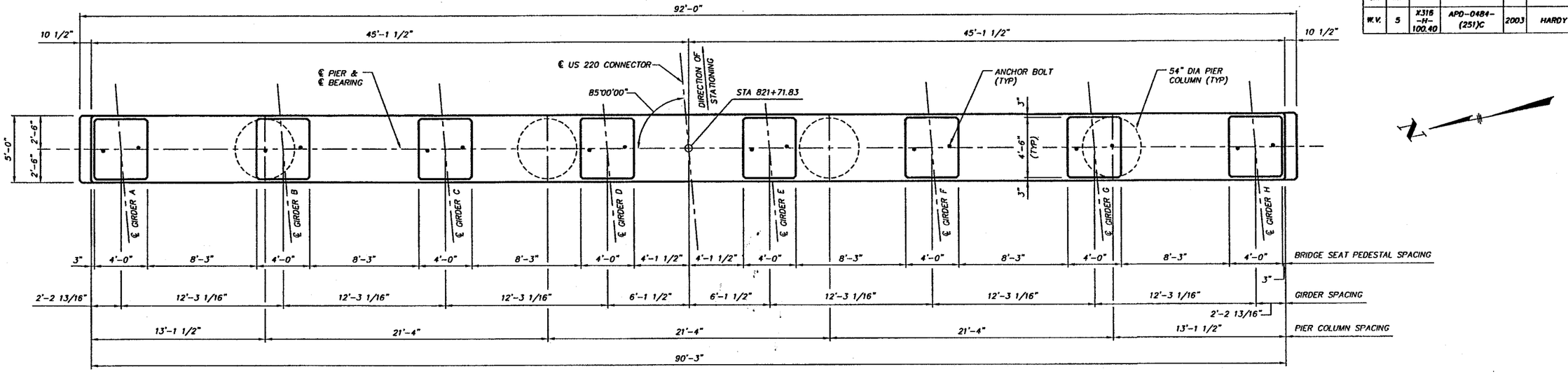

PLAN
SCALE: 1/4" = 1'-0"

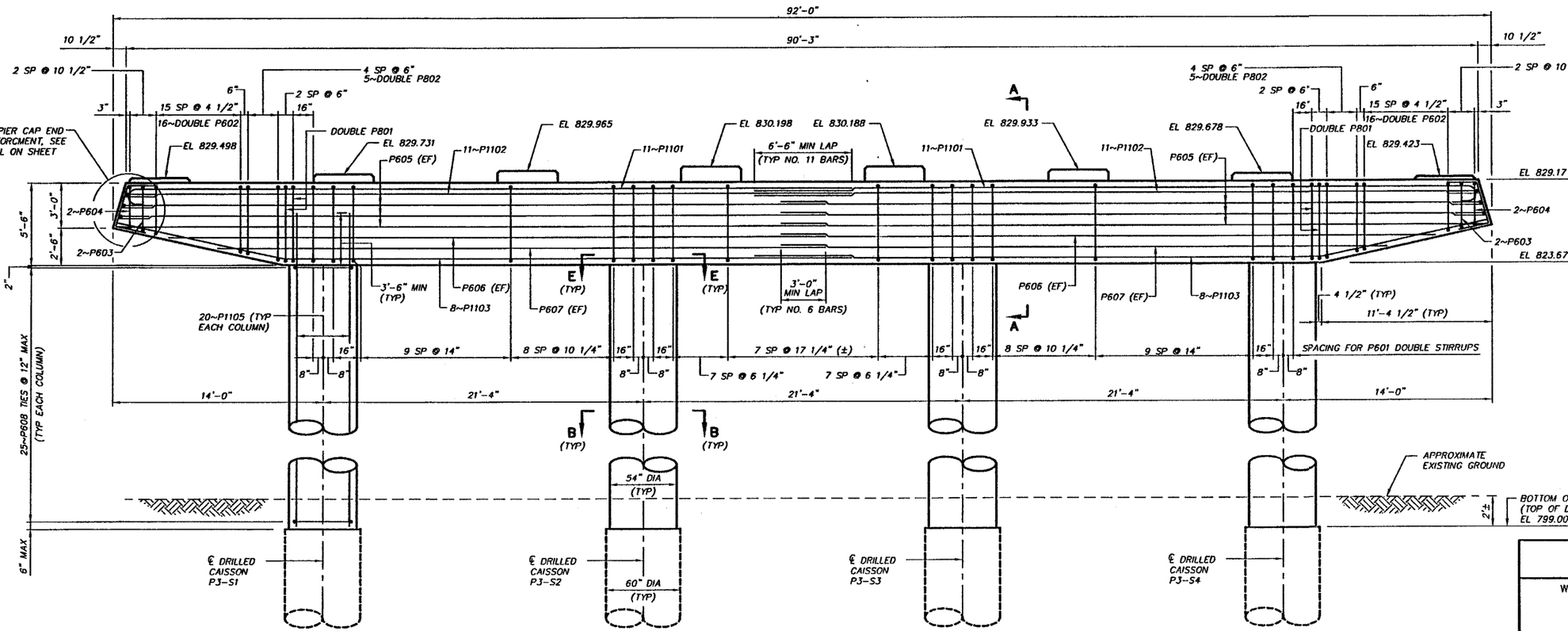

ELEVATION
SCALE: 1/4" = 1'-0"

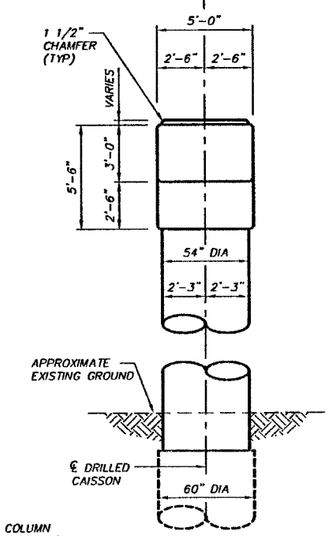

END VIEW
SCALE: 1/4" = 1'-0"

NOTES:

FOR BRIDGE SEAT PEDESTAL LAYOUT AND REINFORCING, ANCHOR BOLT LAYOUT, SECTION A-A, SECTION B-B, SECTION E-E, AND QUANTITIES, SEE SHEET S13.

FOR REINFORCING BAR SCHEDULE, SEE SHEET S14.

FOR DRILLED CAISSON DETAILS, SEE SHEET S5.

NO.	REVISION	BY	DATE

PIER 3

WEST VIRGINIA DEPARTMENT OF TRANSPORTATION
US 220 RAMP CONNECTOR BRIDGE
BRIDGE NO 10445
HARDY COUNTY WEST VIRGINIA

L.A. GATES COMPANY
ENGINEERS AND CONSULTANTS
BECKLEY, WEST VIRGINIA
ROANOKE, VIRGINIA

SHEET NO. **S12**

DESIGNER	DRAWN	CHECKED	DATE	SCALE	REVISIONS
JFM	RWR/JH	GPH	SEP '03	SHOWN	

CADD FILE NAME: PIER3-113
PLOT SCALE: 1=1

PUBLIC ROADS DIV.	STATE DIST. NO.	STATE PROJ. NO.	FEDERAL PROJ. NO.	FISCAL YEAR	COUNTY	SHEET NO.	TOTAL SHEETS
W.V.	5	X316 -H- 100.40	APD-0484-(251)C	2003	HARDY	330	670

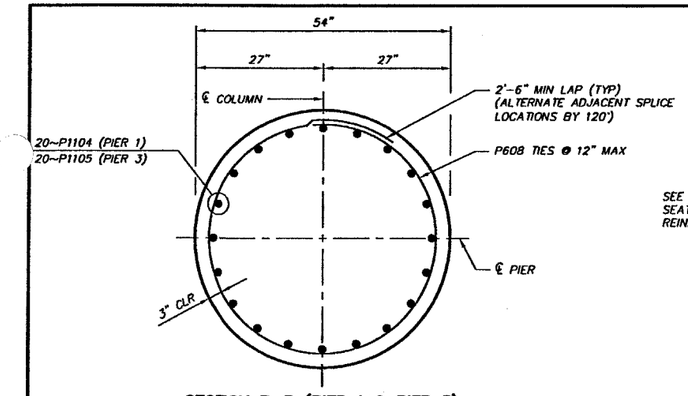

SECTION B–B (PIER 1 & PIER 3)
SCALE: 3/4" = 1'-0"

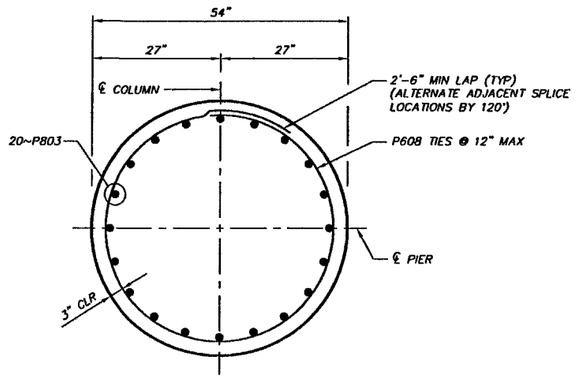

SECTION D–D (PIER 2)
SCALE: 3/4" = 1'-0"

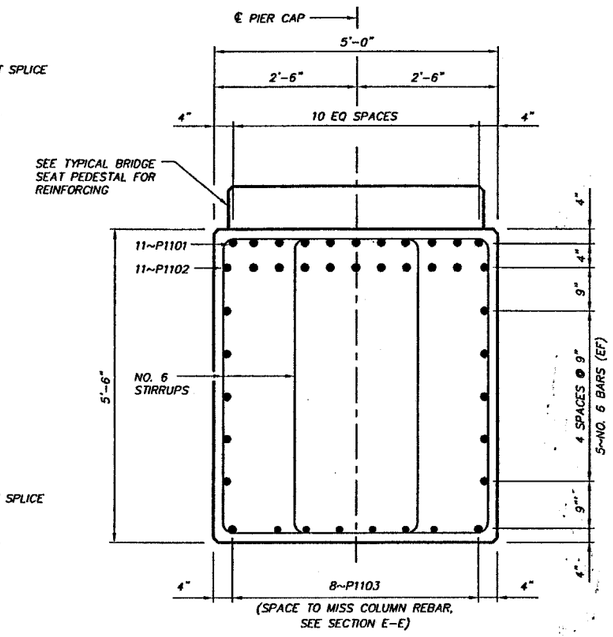

SECTION A–A (PIER 1 & PIER 3)
SCALE: 3/4" =1'-0"

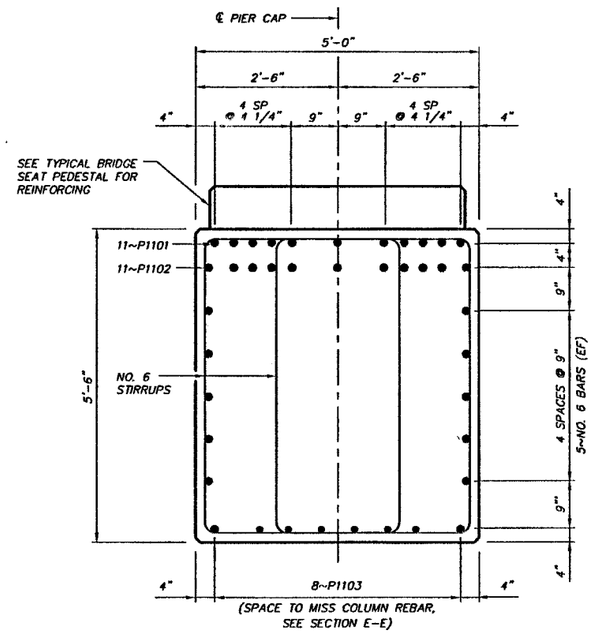

SECTION C–C (PIER 2)
SCALE: 3/4" =1'-0"

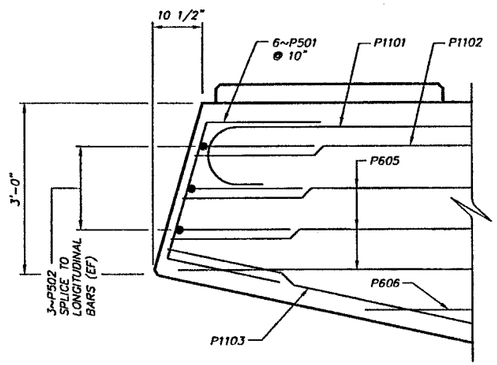

NOTE:
STIRRUPS NOT SHOWN FOR CLARITY.

PIER CAP END DETAIL
SCALE: 3/4 " =1'-0"

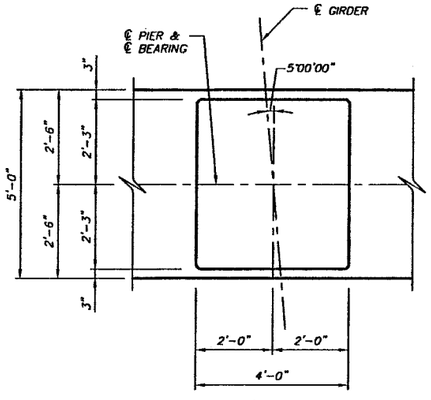

PLAN

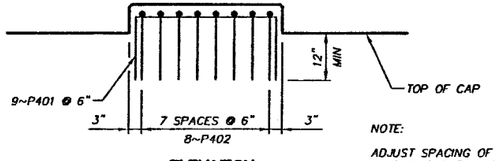

ELEVATION

TYPICAL BRIDGE SEAT PEDESTAL
SCALE: 1/2" = 1'-0"

NOTE:
ADJUST SPACING OF BARS AS REQUIRED TO MISS ANCHOR BOLTS.

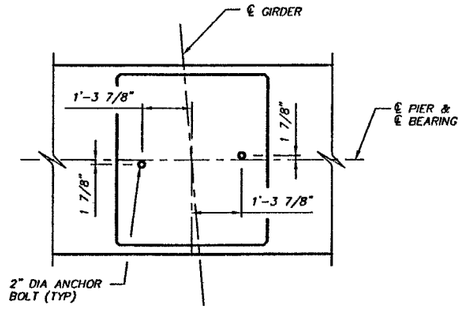

NOTE:
ANCHOR BOLT LOCATIONS DO NOT COINCIDE WITH THE CENTER OF SLOTTED HOLES IN PLATES (TO AVOID CONFLICT WITH REINFORCEMENT).

ANCHOR BOLT LAYOUT – PIER 1 & PIER 3
SCALE: 1/2" = 1'-0"

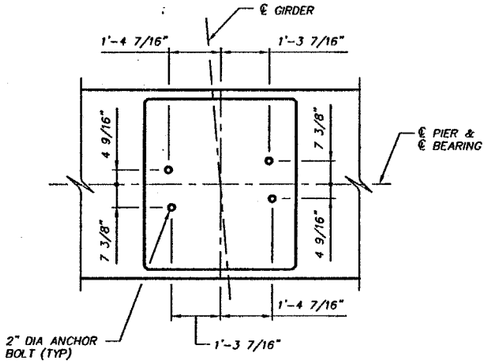

ANCHOR BOLT LAYOUT – PIER 2
SCALE: 1/2" = 1'-0"

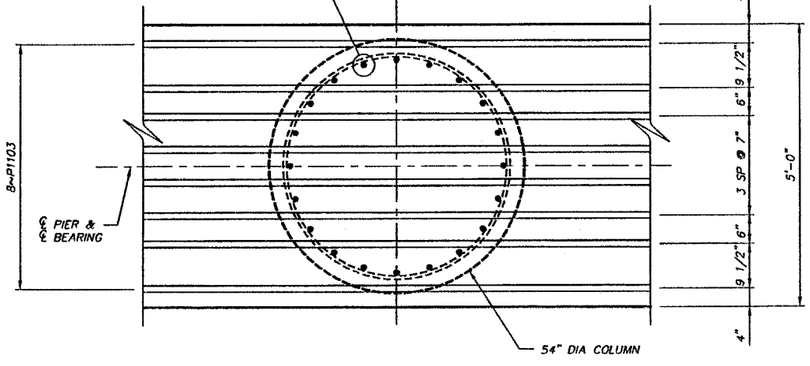

NOTE:
ADJUST DIMENSIONS AS REQUIRED TO FIT FIELD CONDITIONS.

SECTION E–E
SCALE: 3/4 " =1'-0"

ESTIMATE OF QUANTITIES – PIERS

ITEM NO.	DESCRIPTION	UNIT	QUANTITY			
			PIER 1	PIER 2	PIER 3	TOTAL
601002-001	CLASS B CONCRETE	CY	144	153	150	447
602001-001	REINFORCING STEEL BAR	LB	38,119	33,677	39,291	111,087
625001-020	60 INCH DIAMETER DRILLED CAISSONS	LF	65	58	69	192
625003-018	54 INCH ROCK SOCKET FOUNDATION	LF	50	56	55	161

NOTES:
FOR SECTION A–A, B–B, AND E–E LOCATIONS, SEE SHEETS S10 AND S12.

FOR SECTIONS C–C, D–D, AND E–E LOCATIONS, SEE SHEET S11.

NO.	REVISION	BY	DATE

PIER DETAILS

WEST VIRGINIA DEPARTMENT OF TRANSPORTATION
US 220 RAMP CONNECTOR BRIDGE
BRIDGE NO 10445
HARDY COUNTY WEST VIRGINIA

L.A. GATES COMPANY
ENGINEERS AND CONSULTANTS
BECKLEY, WEST VIRGINIA
ROANOKE, VIRGINIA

SHEET NO. S13

DESIGNER	DRAWN	CHECKED	DATE	SCALE	REVISIONS
JFM	RWR	GPH	SEP '03	SHOWN	

CADD FILE NAME: PIERDTLS-113
PLOT SCALE: 1=1

PUBLIC ROADS DIV.	STATE DIST. NO.	STATE PROJ. NO.	FEDERAL PROJ. NO.	FISCAL YEAR	COUNTY	SHEET NO.	TOTAL SHEETS
W.V.	5	X316 -H- 100.40	APD-0484-(251)C	2003	HARDY	331	670

PIERS

MARK	TYPE	NO. REQUIRED PIER 1	NO. REQUIRED PIER 2	NO. REQUIRED PIER 3	LENGTH	DIMENSIONS A	B	C	D	E	COMMENTS
P401	4	72	72	72	7'-10"	3'-8"	2'-1"	2'-1"			PEDESTAL
P402	4	64	64	64	8'-4"	4'-2"	2'-1"	2'-1"			PEDESTAL
* P501	5	12	12	12	6'-6"	2'-0"	2'-6"	2'-0"	1'-11"	7"	CAP
P502	4	6	6	6	8'-6"	4'-6"	2'-0"	2'-0"			CAP
P601	14	132	132	132	19'-2"	5'-2"	3'-5"	1-0"			CAP
P602	14	4 SETS OF 16	4 SETS OF 16	4 SETS OF 16	15'-4" TO 17'-10"	3'-3" TO 4'-6"	3'-5"	1'-0"			CAP
P603	14	4	4	4	15'-0"	3'-1"	3'-5"	1'-0"			CAP
P604	14	4	4	4	14'-8"	2'-11"	3'-5"	1'-0"			CAP
P605	STR	12	12	12	47'-3"						CAP
P606	STR	4	4	4	43'-10"						CAP
P607	STR	4	4	4	40'-6"						CAP
P608	23	92	108	100	15'-1"	2'-0"	2'-6"				COLUMN
P801	14	8	8	8	19'-10"	5'-2"	3'-5"	1'-4"			CAP
P802	14	4 SETS OF 5	4 SETS OF 5	4 SETS OF 5	18'-10" TO 19'-8"	4'-8" TO 5'-1"	3'-5"	1'-4"			CAP
P803	STR	--	80	--	29'-3"						COLUMN
P1101	17	22	22	22	50'-1"	48'-6"	1'-2 3/4"	1'-7"			CAP
P1102	STR	22	22	22	48'-7"						CAP
P1103	2	16	16	16	49'-5"	38'-0"	11'-5"	11'-2"	2'-6"		CAP
P1104	STR	80	--	--	26'-0"						COLUMN
P1105	STR	--	--	80	28'-4"						COLUMN

* FIELD BEND P501 BARS AS REQUIRED TO FIT.

BAR BENDING DIAGRAMS

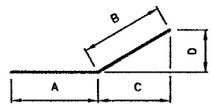

TYPE 2

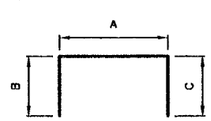

TYPE 4

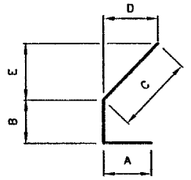

TYPE 5

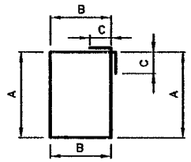

TYPE 14

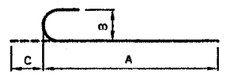

TYPE 17

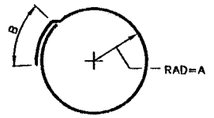

TYPE 23

REINFORCING BAR SETS:

P602: 4 SETS; 16 BARS EACH SET; VARY DIMENSION 'A' BY 1" PER BAR.

P802: 4 SETS; 5 BARS EACH SET; VARY DIMENSION 'A' BY 1 1/4" PER BAR.

NOTES:

ALL DIMENSIONS ARE OUT-TO-OUT OF BARS.

NO CORRECTION IN LENGTH IS TO BE MADE FOR BEND CURVATURES.

THE FIRST DIGIT FOLLOWING PREFIX INDICATES BAR SIZE.
EXAMPLE: S501E = NO. 5 BAR

BARS WITH E SUFFIX INDICATE EPOXY COATED BARS.

NO.	REVISION	BY	DATE

REINFORCING BAR SCHEDULE – PIERS

WEST VIRGINIA DEPARTMENT OF TRANSPORTATION
US 220 RAMP CONNECTOR BRIDGE
BRIDGE NO 10445
HARDY COUNTY, WEST VIRGINIA

L.A. GATES COMPANY
ENGINEERS AND CONSULTANTS
BECKLEY, WEST VIRGINIA
ROANOKE, VIRGINIA

SHEET NO. **S14**

DESIGNER	DRAWN	CHECKED	DATE	SCALE	REVISIONS
JFM	BMB	GPH	SEP '03	SHOWN	

CADD FILE NAME: PIERBARSCHE-113
PLOT SCALE: 1=1

PUBLIC ROADS DIV.	STATE DIST. NO.	STATE PROJ. NO.	FEDERAL PROJ. NO.	FISCAL YEAR	COUNTY	SHEET NO.	TOTAL SHEETS
W.V.	5	X316 -H- 100.40	APD-0484-(251)C	2003	HARDY	332	670

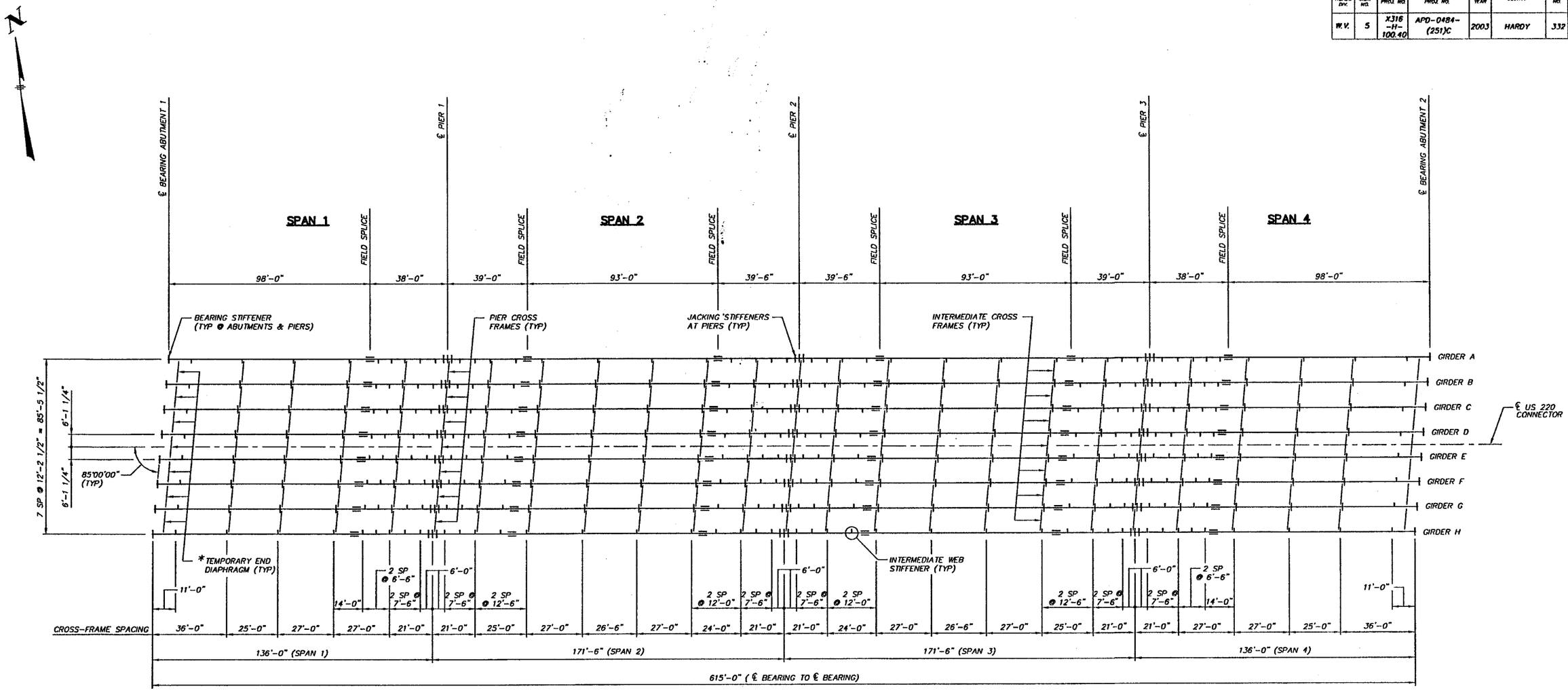

FRAMING PLAN
NTS

* TEMPORARY END DIAPHRAGMS SHALL BE DESIGNED AND FURNISHED BY THE CONTRACTOR (SEE GENERAL NOTES – WORKING DRAWINGS).

NO.	REVISION	BY	DATE

FRAMING PLAN

WEST VIRGINIA DEPARTMENT OF TRANSPORTATION
US 220 RAMP CONNECTOR BRIDGE
BRIDGE NO 10445
HARDY COUNTY, WEST VIRGINIA

L.A. GATES COMPANY
ENGINEERS AND CONSULTANTS
BECKLEY, WEST VIRGINIA
ROANOKE, VIRGINIA

SHEET NO. **S15**

DESIGNER	DRAWN	CHECKED	DATE	SCALE	REVISIONS
JFM/BMB	RWR	GPH	SEP '03	NONE	

CADD FILE NAME: FRAMPLANSTL-113
PLOT SCALE: 1=1

PUBLIC ROADS DIV.	STATE DIST. NO.	STATE PROJ NO.	FEDERAL PROJ NO.	FISCAL YEAR	COUNTY	SHEET NO.	TOTAL SHEETS
W.V.	5	X316 -H- 100.40	APD-0484-(251)C	2003	HARDY	333	670

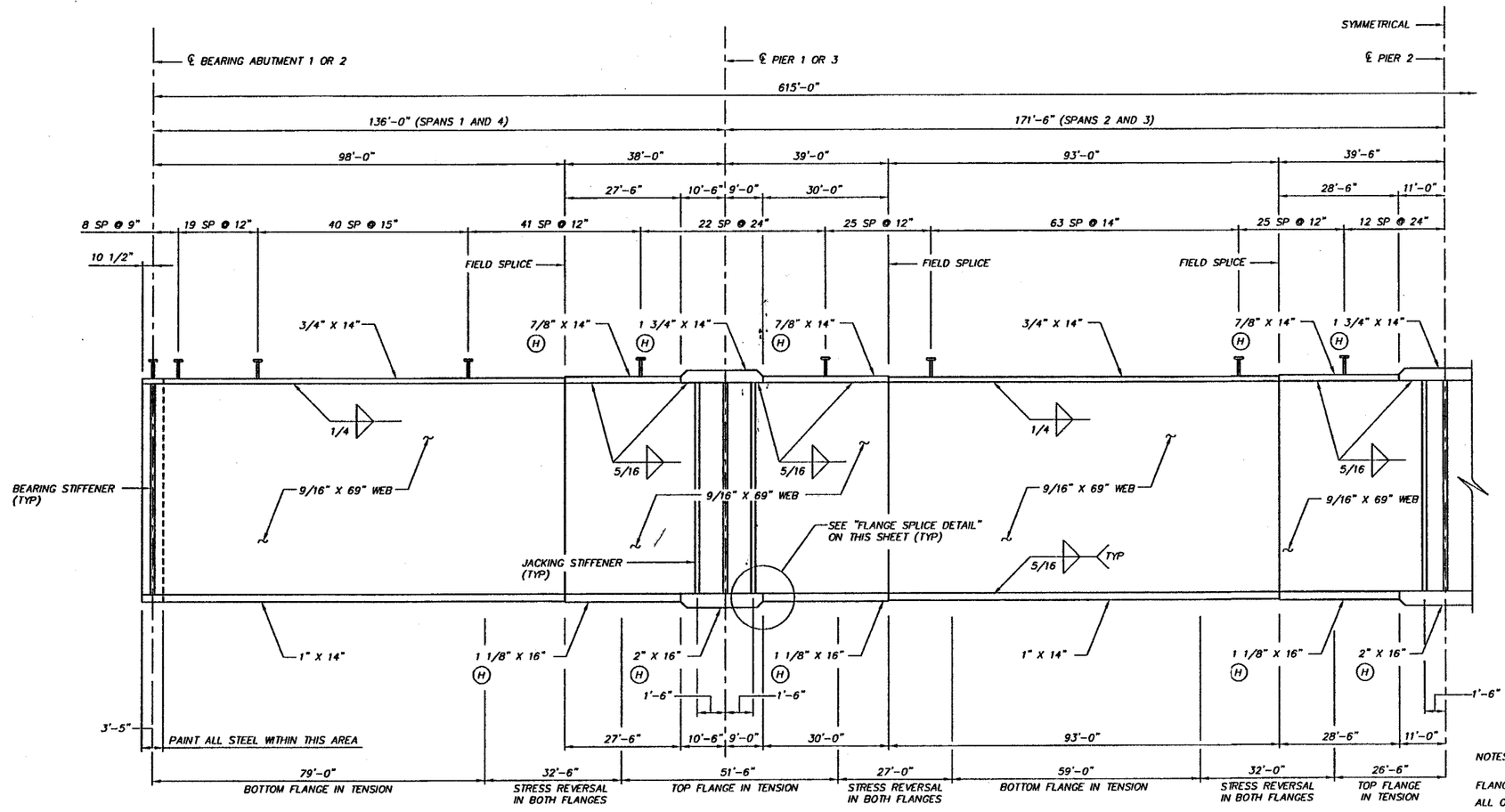

HALF ELEVATION – INTERIOR GIRDER
NTS

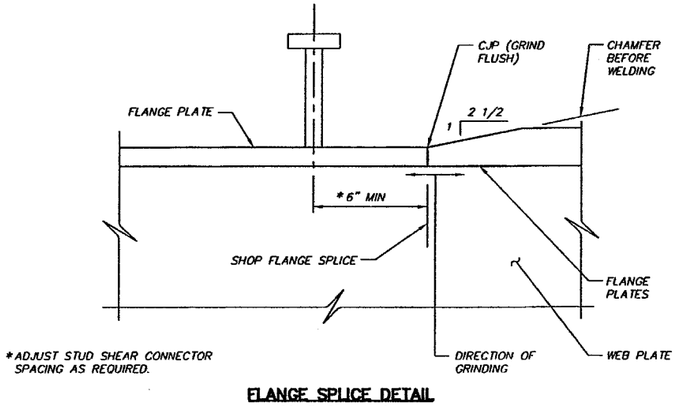

FLANGE SPLICE DETAIL
SCALE: 3" = 1'-0"

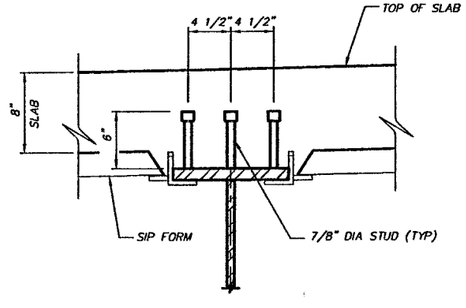

STUD SHEAR CONNECTOR DETAIL
SCALE: 1 1/2" = 1'-0"

NOTES:

FLANGE PLATES DENOTED WITH AN (H) SHALL BE GRADE HPS70W STEEL. ALL OTHER FLANGE PLATES SHALL BE GRADE 50W STEEL.

ALL WEB PLATES SHALL BE GRADE 50W STEEL.

DO NOT INSTALL STUD SHEAR CONNECTORS ON FLANGE SPLICE PLATES. REDUCE THE SPACING OF THOSE ADJACENT TO THE SPLICE PLATES TO 6" AND PROVIDE THE SAME NUMBER THAT WOULD BE REQUIRED WITHOUT THE FIELD SPLICE.

WEB STIFFENERS TO BE INSTALLED AT LOCATIONS SHOWN ON SHEET S15. SEE SHEET S19 FOR DETAILS.

JACKING STIFFENERS SHALL BE INSTALLED ON BOTH SIDES OF WEB AT LOCATIONS SHOWN. SEE SHEET S19 FOR DETAILS.

FOR FIELD SPLICE DETAILS, SEE SHEET S18.

FOR DRAINAGE SCUPPER LOCATIONS AND DETAILS, SEE SHEETS S21, S25, AND S26.

FOR INSPECTION HANDRAIL DETAILS, SEE SHEET S22.

FOR DRIP BAR DETAILS, SEE SHEET S21.

NO.	REVISION	BY	DATE

INTERIOR GIRDER ELEVATION AND MISCELLANEOUS STEEL DETAILS

WEST VIRGINIA DEPARTMENT OF TRANSPORTATION
US 220 RAMP CONNECTOR BRIDGE
BRIDGE NO 10445
HARDY COUNTY, WEST VIRGINIA

L.A. GATES COMPANY
ENGINEERS AND CONSULTANTS
BECKLEY, WEST VIRGINIA
ROANOKE, VIRGINIA

SHEET NO. **S16**

DESIGNER	DRAWN	CHECKED	DATE	SCALE	REVISIONS
JFM/BMB	RWR	GPH	SEP '03	NONE	

CADD FILE NAME: GIRDRELVNT-113
PLOT SCALE: 1=1

PUBLIC ROADS DIV.	STATE DIST. NO.	STATE PROJ. NO.	FEDERAL PROJ. NO.	FISCAL YEAR	COUNTY	SHEET NO.	TOTAL SHEETS
W.V.	5	X316 -H- 100.40	APD-0484-(251)C	2003	HARDY	334	670

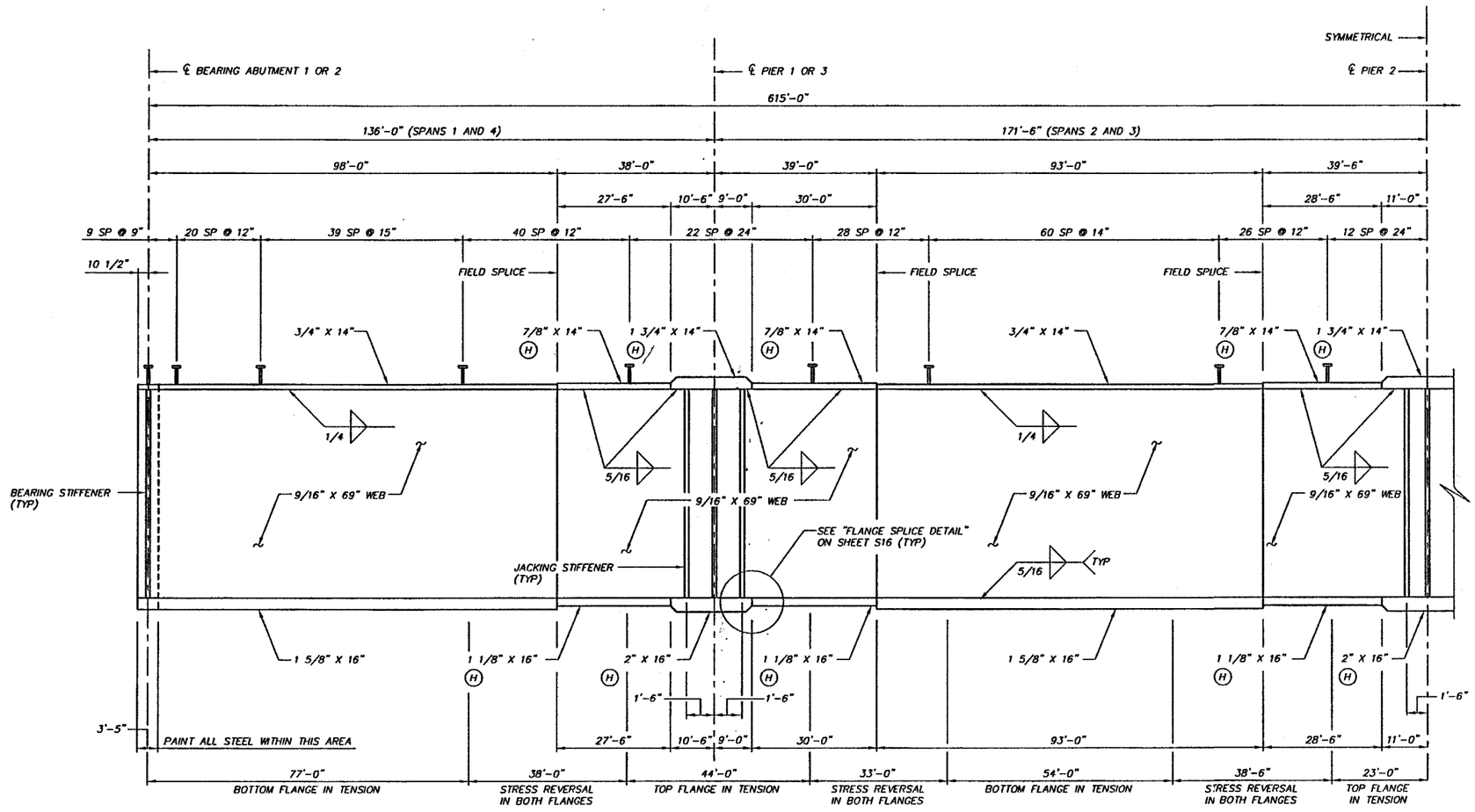

HALF ELEVATION – EXTERIOR GIRDER
NTS

FOR NOTES, SEE SHEET S16.

NO.	REVISION	BY	DATE

EXTERIOR GIRDER ELEVATION

WEST VIRGINIA DEPARTMENT OF TRANSPORTATION
US 220 RAMP CONNECTOR BRIDGE
BRIDGE NO 10445
HARDY COUNTY, WEST VIRGINIA

L.A. GATES COMPANY
ENGINEERS AND CONSULTANTS
BECKLEY, WEST VIRGINIA
ROANOKE, VIRGINIA

SHEET NO. **S17**

DESIGNER	DRAWN	CHECKED	DATE	SCALE	REVISIONS
JFM/BMB	RWR	GPH	SEP '03	NONE	

CADD FILE NAME: GIRDRELVEXT-113
PLOT SCALE: 1=1

PUBLIC ROADS DIV.	STATE DIST. NO.	STATE PROJ. NO.	FEDERAL PROJ. NO.	FISCAL YEAR	COUNTY	SHEET NO.	TOTAL SHEETS
W.V.	5	X316 -H- 100.40	APD-0484-(251)C	2003	HARDY	335	670

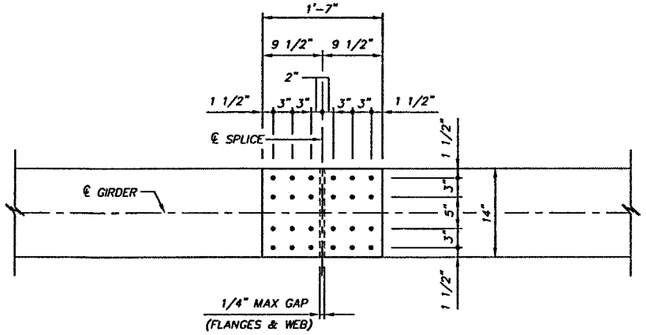

PLAN – TOP FLANGE SPLICE

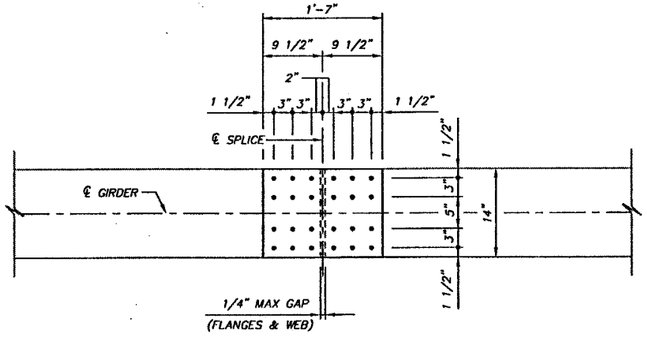

PLAN – TOP FLANGE SPLICE

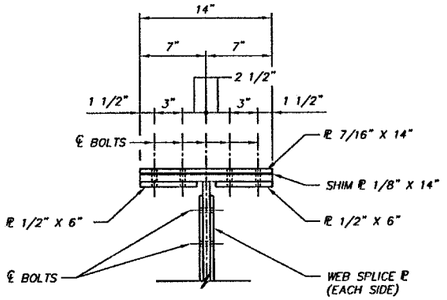

SECTION A–A
SCALE: 1 1/2" = 1'-0"

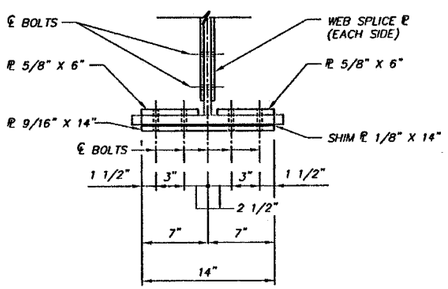

SECTION B–B
SCALE: 1 1/2" = 1'-0"

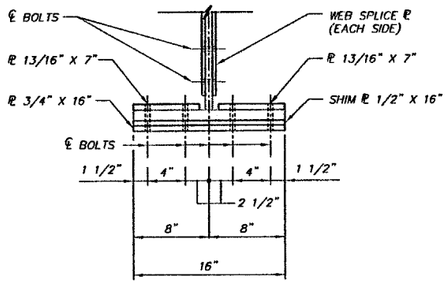

SECTION C–C
SCALE: 1 1/2" = 1'-0"

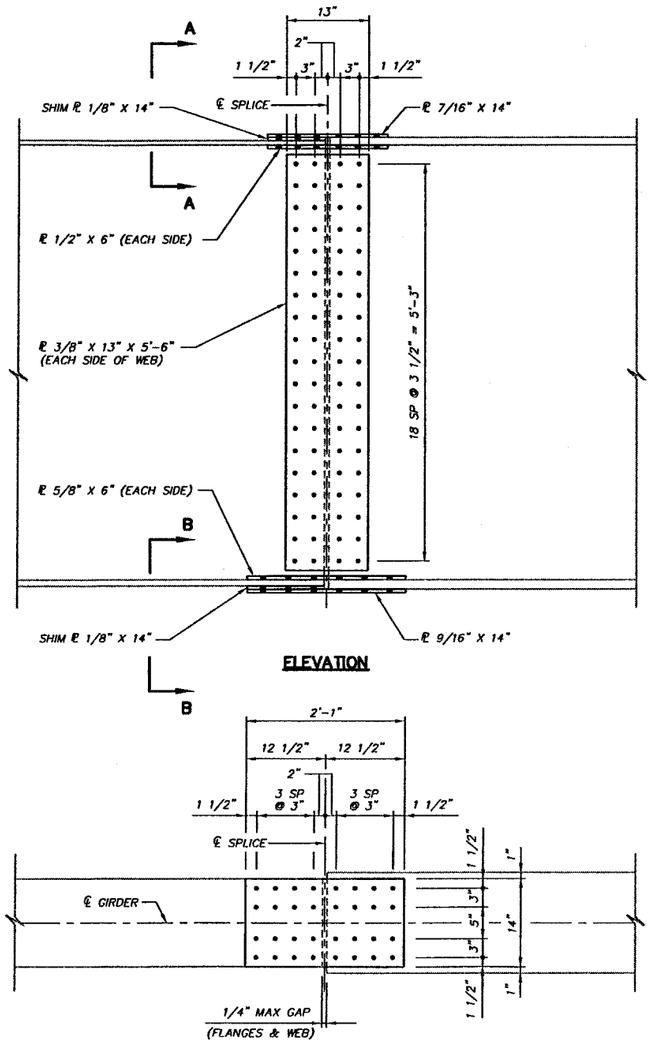

PLAN – BOTTOM FLANGE SPLICE

INTERIOR GIRDER SPLICE
SCALE: 1" = 1'-0"

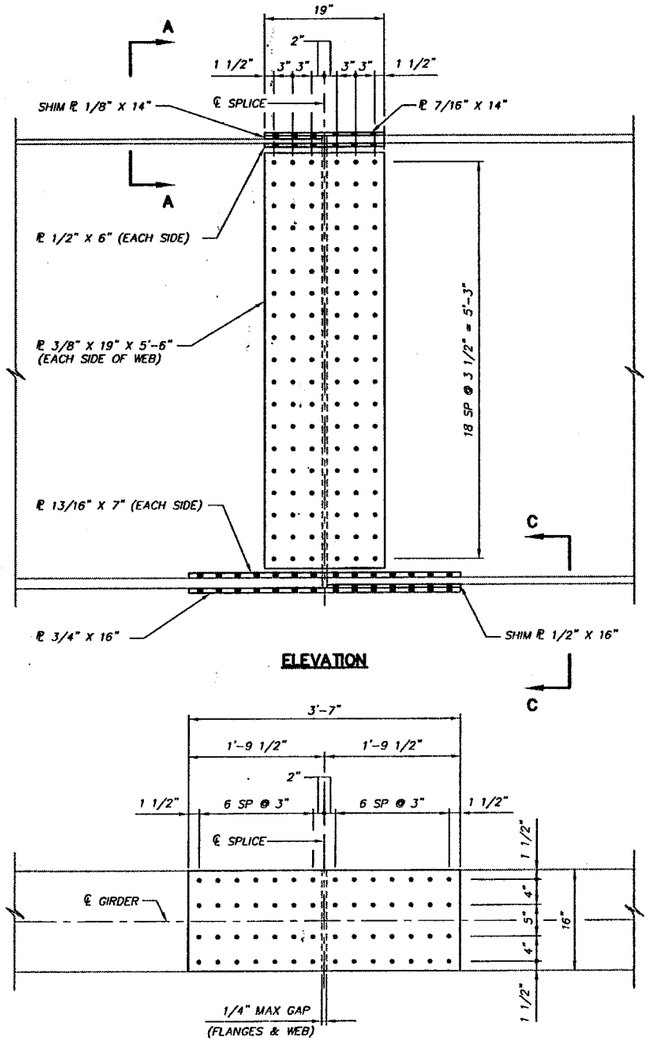

PLAN – BOTTOM FLANGE SPLICE

EXTERIOR GIRDER SPLICE
SCALE: 1" = 1'-0"

NOTE:
FOR SPLICE LOCATIONS, SEE SHEET S15.

NO.	REVISION	BY	DATE

FIELD SPLICES

WEST VIRGINIA DEPARTMENT OF TRANSPORTATION
US 220 RAMP CONNECTOR BRIDGE
BRIDGE NO 10445
HARDY COUNTY WEST VIRGINIA

L.A. GATES COMPANY
ENGINEERS AND CONSULTANTS
BECKLEY, WEST VIRGINIA
ROANOKE, VIRGINIA

SHEET NO. S18

DESIGNER	DRAWN	CHECKED	DATE	SCALE	REVISIONS
JFM	RWR	GPH	SEP '03	SHOWN	

CADD FILE NAME: SPLICE-DTLS-113
PLOT SCALE: 1=1

PUBLIC ROADS DIV.	STATE DIST. NO.	STATE PROJ. NO.	FEDERAL PROJ. NO.	FISCAL YEAR	COUNTY	SHEET NO.	TOTAL SHEETS
W.V.	5	X316 -H- 100.40	APD-0484- (251)C	2003	HARDY	338	670

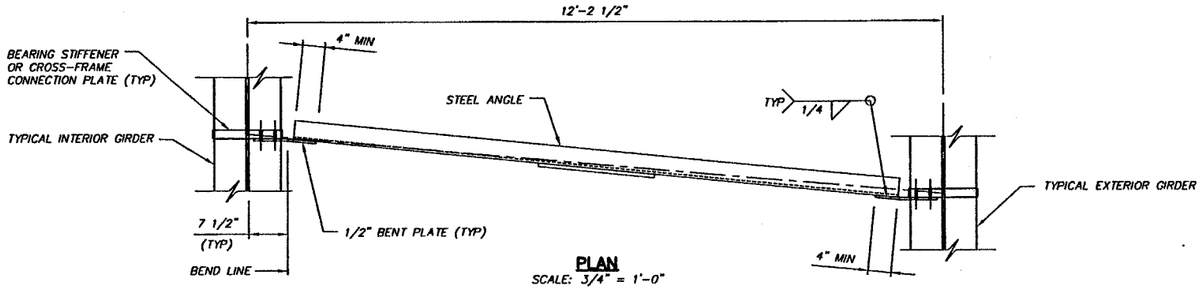

PLAN
SCALE: 3/4" = 1'-0"

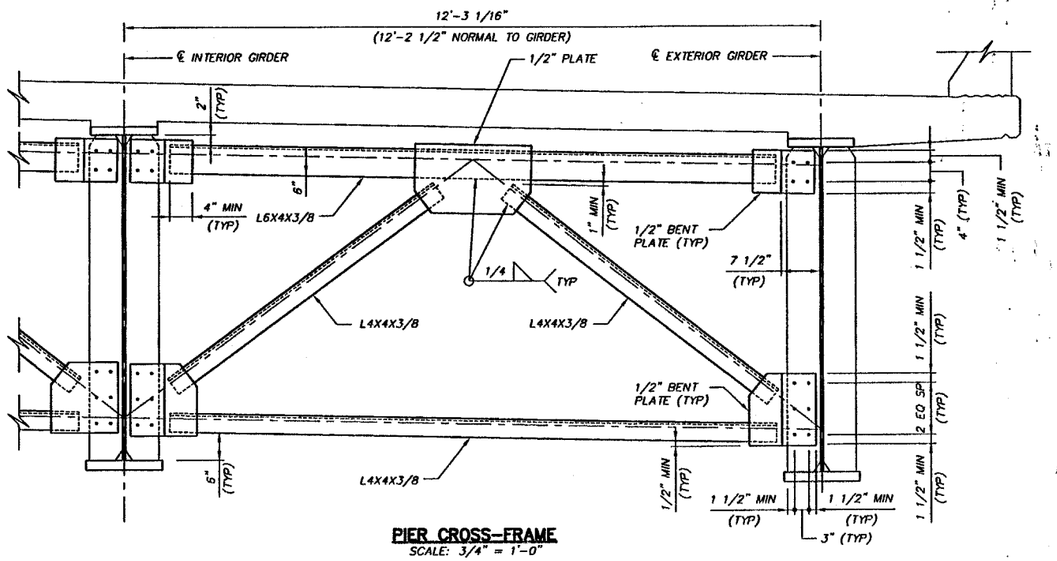

PIER CROSS-FRAME
SCALE: 3/4" = 1'-0"

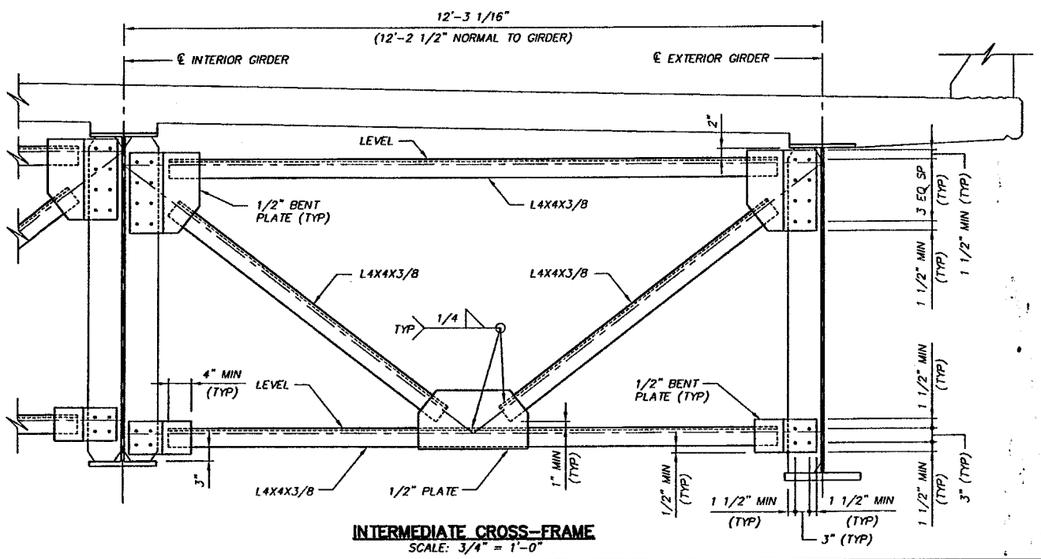

INTERMEDIATE CROSS-FRAME
SCALE: 3/4" = 1'-0"

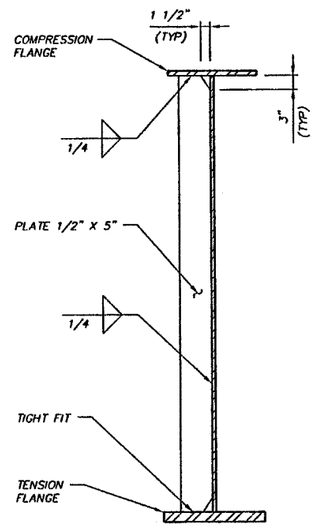

TYPE I

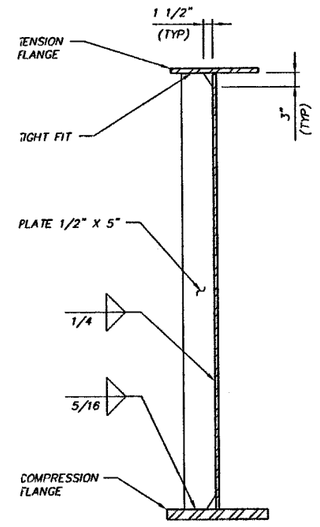

TYPE II

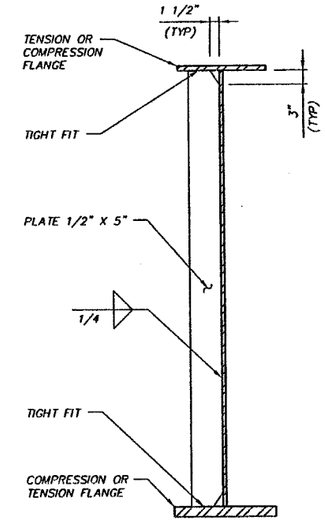

TYPE III
(IN STRESS REVERSAL ZONE)

INTERMEDIATE WEB STIFFENERS
SCALE: 1" = 1'-0"

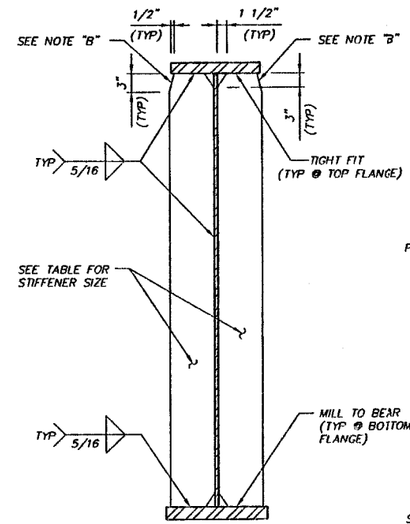

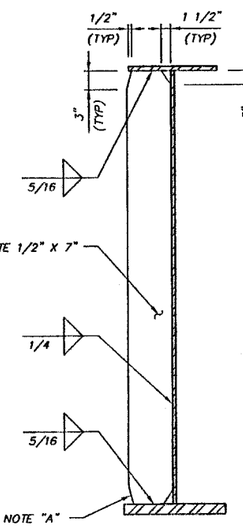

BEARING AND FUTURE JACKING STIFFENERS
SCALE: 1" = 1'-0"

CROSS-FRAME CONNECTION PLATES
SCALE: 1" = 1'-0"

X WELD: 1/4" ± 1/8" FROM END OF PLATE
Y WELD: 1/2" ± 1/4" FROM END OF PLATE

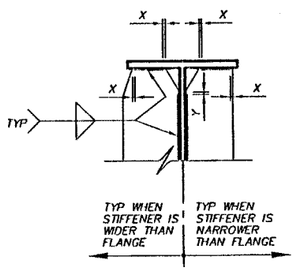

WELD TERMINATION DETAIL
NTS

BEARING STIFFENERS FOR FUTURE JACKING	
LOCATION	SIZE
PIERS	1" X 7"

FOR JACKING LOADS, SEE TABLE ON SHEET S20. AT ABUTMENTS, JACK CONCRETE END DIAPHRAGMS ON EACH SIDE OF EACH GIRDER.

BEARING STIFFENERS	
LOCATION	SIZE
ABUTMENTS	1" X 5 1/2"
PIERS	1 7/8" X 7"

NOTE "A":
BOTTOM CLIP REQUIRED FOR INTERIOR GIRDERS WHERE FLANGE WIDTH IS 14".

NOTE "B":
TOP CLIP REQUIRED AT PIERS.

NO.	REVISION	BY	DATE

CROSS-FRAME AND STIFFENER DETAILS

WEST VIRGINIA DEPARTMENT OF TRANSPORTATION
US 220 RAMP CONNECTOR BRIDGE
BRIDGE NO 10445
HARDY COUNTY WEST VIRGINIA

L.A. GATES COMPANY
ENGINEERS AND CONSULTANTS
BECKLEY, WEST VIRGINIA
ROANOKE, VIRGINIA

SHEET NO. **S19**

DESIGNER	DRAWN	CHECKED	DATE	SCALE	REVISIONS
JFM	RWR	GPH	SEP '03	SHOWN	

CADD FILE NAME: CROSSFRAM-113
PLOT SCALE: 1=1

PUBLIC ROADS DIV.	STATE DIST. NO.	STATE PROJ. NO.	FEDERAL PROJ. NO.	FISCAL YEAR	COUNTY	SHEET NO	TOTAL SHEETS
W.V.	5	X316 -H- 100.40	APD-0484- (251)C	2003	HARDY	337	670

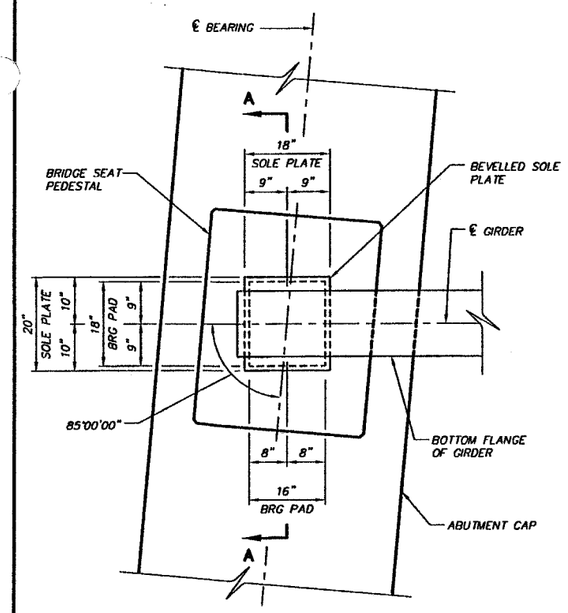

PLAN

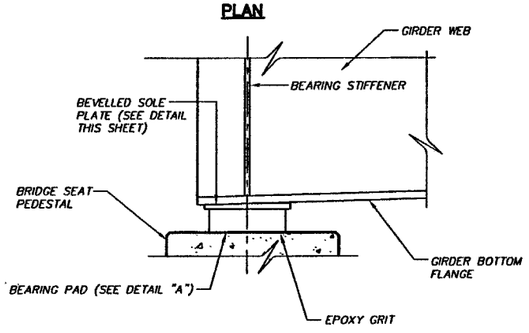

ELEVATION

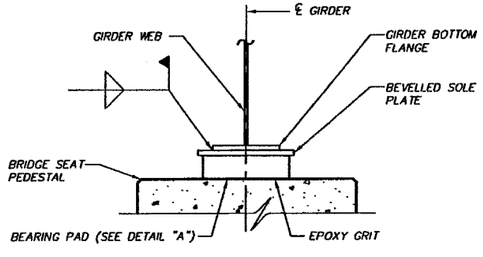

SECTION A–A

AT ABUTMENTS
SCALE: 3/4" 1'-0"

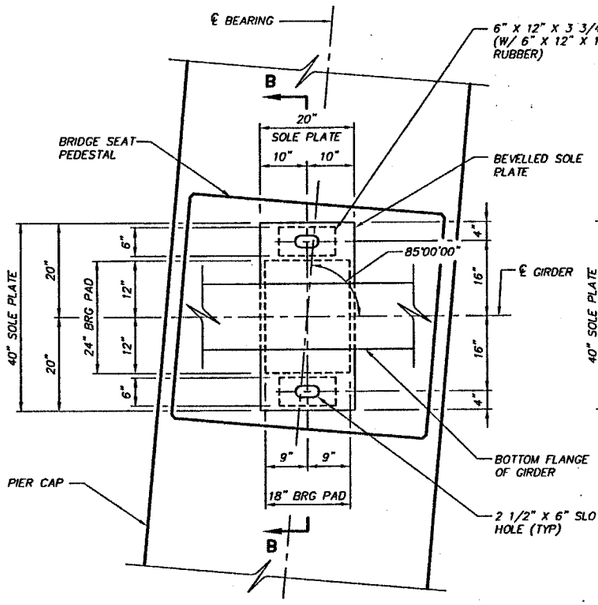

PLAN

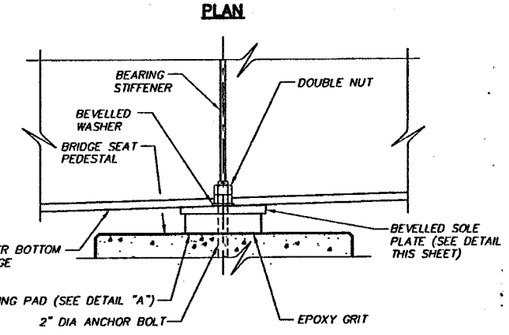

ELEVATION

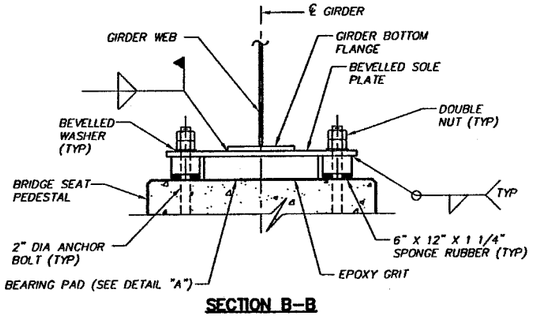

SECTION B–B

AT PIERS 1 AND 3
SCALE: 3/4" 1'-0"

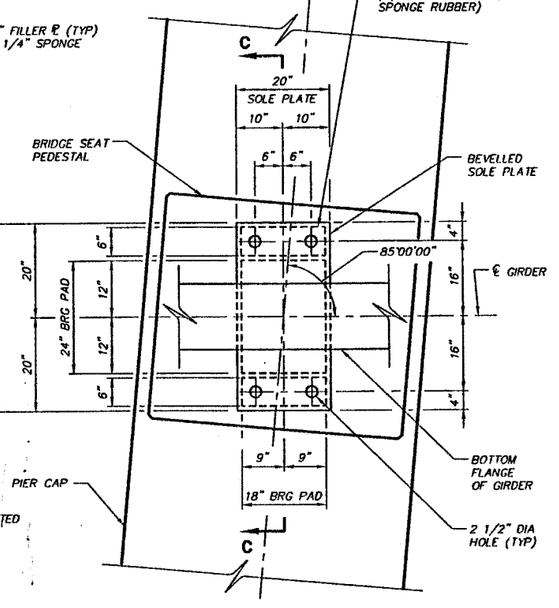

PLAN

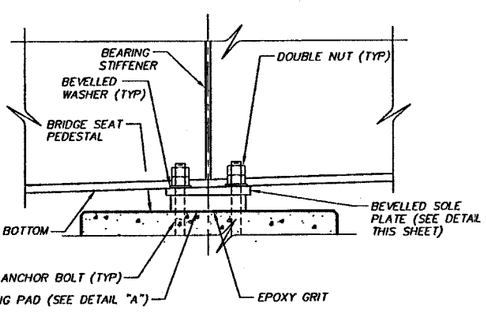

ELEVATION

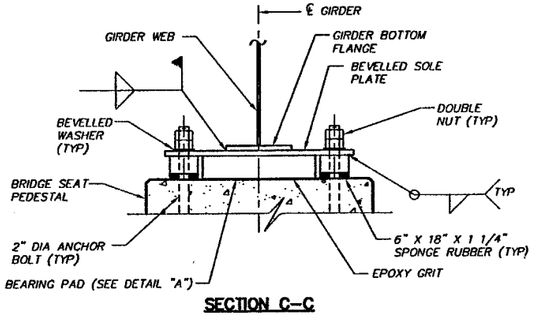

SECTION C–C

AT PIER 2
SCALE: 3/4" 1'-0"

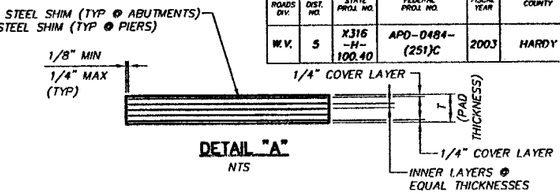

DETAIL "A"
NTS

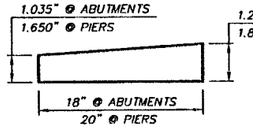

BEVELED SOLE PLATE DETAIL
NTS

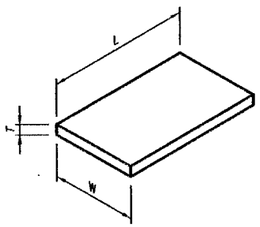

TYPICAL BEARING PAD
NTS

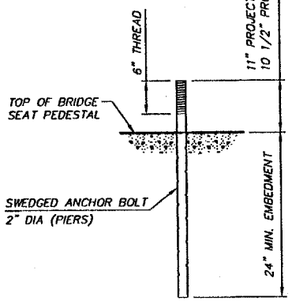

ANCHOR BOLT DETAIL
NTS

BEARINGS

LOCATION	PAD SIZE W	PAD SIZE L	PAD SIZE T	INNER LAYERS	STEEL SHIMS	BEARING TYPE	*DESIGN LOADING
ABUTMENTS 1 & 2	16"	x18"	x5"	4	5	SEMI-INT	278 kips
PIERS 1 & 3	18"	x24"	x4 1/4"	4	5	EXP	671 kips
PIER 2	18"	x24"	x3 1/2"	3	4	FIX	675 kips

* SERVICE LOADS (USE FOR FUTURE JACKING)

NOTES:

MATERIALS SHALL CONFORM TO AASHTO M251 (STANDARD SPECIFICATIONS FOR LAMINATED ELASTOMERIC BRIDGE BEARINGS). STEEL SHIMS SHALL BE ASTM A1011, GRADE 36.

FABRICATE SOLE AND FILLER PLATES FROM STEEL CONFORMING TO AASHTO M270, GRADE 50W.

BEARING PADS SHALL USE VIRGIN POLYCHLOROPRENE (NEOPRENE) MEETING THE REQUIREMENTS OF AASHTO STANDARD SPECIFICATIONS FOR HIGHWAY BRIDGES, DIVISION II CONSTRUCTION, SECTION 18, BEARINGS. ELASTOMER COMPOUND SHALL BE LOW TEMPERATURE, GRADE 3. SHEAR MODULUS SHALL BE MIN 160 psi AND MAX 175 psi.

BEARINGS SHALL BE SUBJECT TO TESTING REQUIREMENTS IN ACCORDANCE WITH AASHTO LRFD CONSTRUCTION SPECIFICATION SECTION 18, CORRESPONDING TO DESIGN METHOD B.

THE CONTRACTOR SHALL COORDINATE THE INSTALLATION OF ANCHOR BOLTS AND THE ERECTION OF PIER CROSS-FRAMES TO AVOID ANY CONSTRUCTION CONFLICTS. THE METHOD AND TIMING OF ANCHOR BOLT INSTALLATION SHALL BE CONSIDERED. ANCHOR BOLT EXTENSIONS MAY BE ADJUSTED AS REQUIRED TO FIT CROSS-FRAMES.

SEE INDIVIDUAL PIER SHEETS FOR ANCHOR BOLT LOCATIONS.

WELDING OF THE STEEL PLATES ADJACENT TO THE ELASTOMERIC BEARING PAD SHALL BE CONTROLLED SO THAT THE TEMPERATURE OF THE STEEL PLATE SURFACE IN CONTACT WITH ELASTOMERIC PAD SHALL NOT EXCEED 250° F AS DETERMINED BY THE USE OF PYROMETRIC STICKS OR OTHER TEMPERATURE MONITORING DEVICES. QUENCHING TO ACCELERATE COOLING IS NOT PERMITTED.

ALL COSTS ASSOCIATED WITH THE FABRICATION AND INSTALLATION OF THE ELASTOMERIC BEARINGS SHALL BE INCLUDED IN THE PRICE BID FOR ITEMS AS SHOWN IN THE ESTIMATE OF QUANTITIES TABLE, THIS SHEET. SOLE PLATES AND FILLER PLATES SHALL BE PAID FOR UNDER ITEM 615001-001, STEEL SUPERSTRUCTURE.

ESTIMATE OF QUANTITIES – BEARINGS

ITEM	DESCRIPTION	UNITS	QUANTITY ABUT 1	ABUT 2	PIER 1	PIER 2	PIER 3
615028-001	GUIDED BEARING	EA	–	–	8	–	8
615029-001	NON-GUIDED BEARING	EA	8	8	–	–	–
615030-001	FIXED BEARING	EA	–	–	–	8	–

BEARINGS

WEST VIRGINIA DEPARTMENT OF TRANSPORTATION
US 220 RAMP CONNECTOR BRIDGE
BRIDGE NO 10445
HARDY COUNTY WEST VIRGINIA

L.A. GATES COMPANY
ENGINEERS AND CONSULTANTS
BECKLEY, WEST VIRGINIA
ROANOKE, VIRGINIA

SHEET NO. S20

NO.	REVISION	BY	DATE

DESIGNER	DRAWN	CHECKED	DATE	SCALE	REVISIONS
GPH	RWR	BMB	SEP '03	SHOWN	

CADD FILE NAME: BEARINGDTLS-113
PLOT SCALE: 1=1

PUBLIC ROADS DIV.	STATE DIST. NO.	STATE PROJ. NO.	FEDERAL PROJ. NO.	FISCAL YEAR	COUNTY	SHEET NO.	TOTAL SHEETS
W.V.	5	X316 -H- 100.40	APD-0484- (251)C	2003	HARDY	338	670

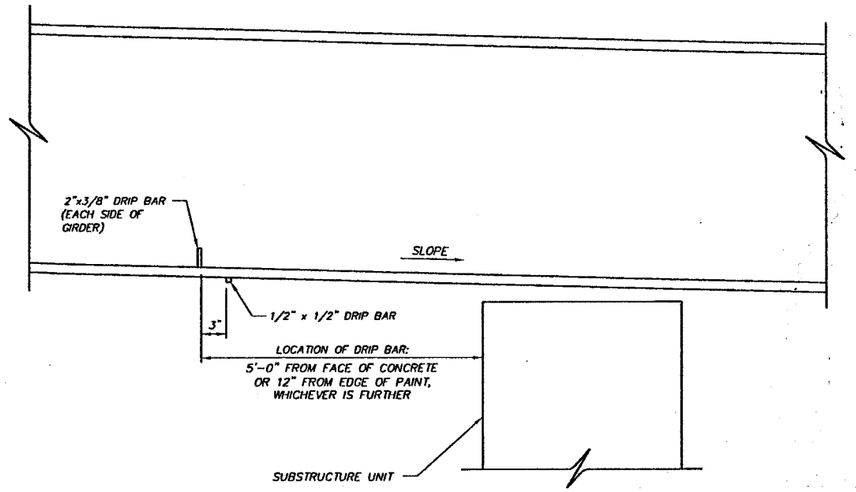

LOCATION

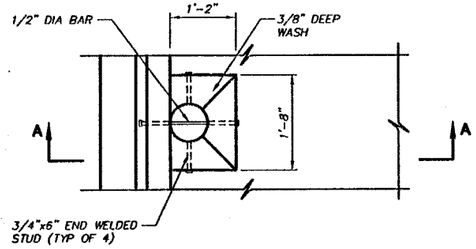

PLAN
SCALE: 3/4" = 1'-0"

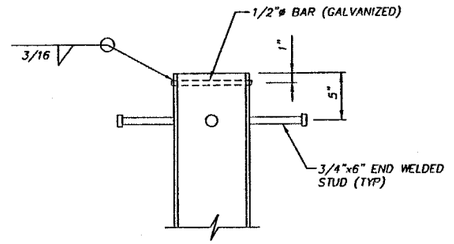

DETAIL "C"
SCALE: 1 1/2" = 1'-0"

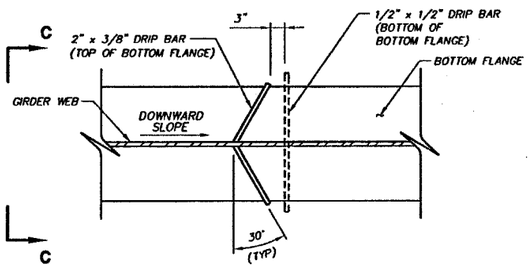

PLAN

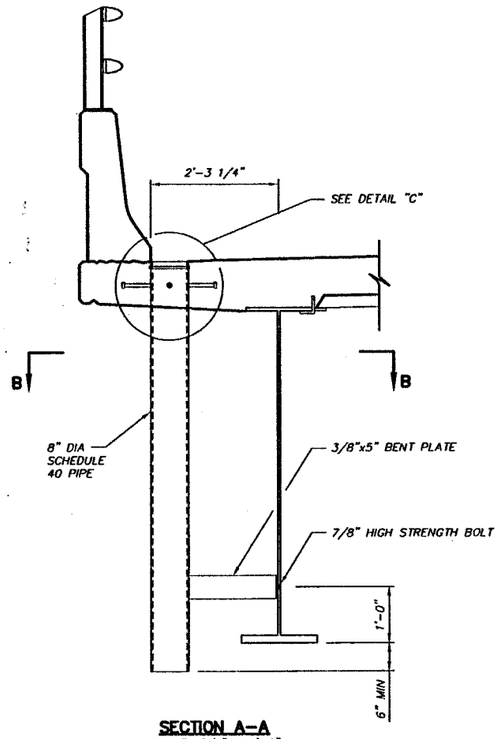

SECTION A-A
SCALE: 3/4" = 1'-0"

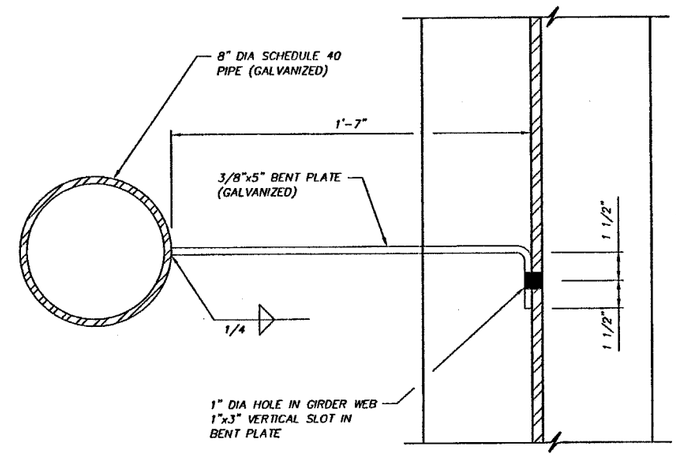

SECTION B-B
SCALE: 3" = 1'-0"

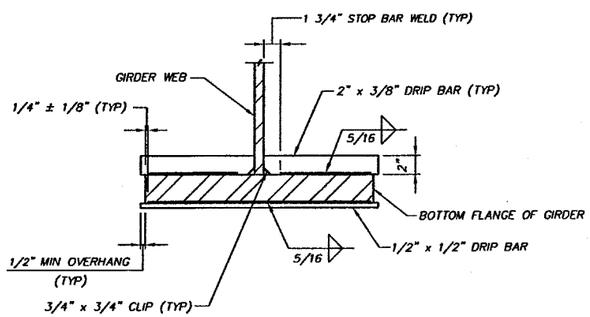

SECTION C-C

DRIP BAR DETAILS
NTS

DRIP BAR NOTES:

DRIP BARS SHALL BE LOCATED ON THE UPWARD SLOPE OF ALL GIRDERS ADJACENT TO SUBSTRUCTURE UNITS.

DRIP BAR ON TOP OF BOTTOM FLANGE SHALL BE CAULKED WITH DARK BROWN CAULKING AGAINST FLANGE, WEB AND FILLET WELD, SUBJECT TO THE APPROVAL OF THE ENGINEER.

INCLUDE ALL COSTS IN ITEM 615001-001, STEEL SUPERSTRUCTURE.

SCUPPER DETAILS

DRAINAGE SCUPPER NOTES:

DRAINAGE COMPONENTS SHALL BE HOT-DIPPED GALVANIZED ACCORDING TO AASHTO M111 AFTER FABRICATION.

ALL DECK DRAINAGE COMPONENTS SHALL BE SOLVENT CLEANED AND PAINTED AS SPECIFIED FOR STRUCTURAL STEEL AFTER GALVANIZING.

FOR SCUPPER LOCATIONS, SEE SHEET S25 AND S26.

NO.	REVISION	BY	DATE

DRAINAGE SCUPPER AND DRIP BAR DETAILS

WEST VIRGINIA DEPARTMENT OF TRANSPORTATION
US 220 RAMP CONNECTOR BRIDGE
BRIDGE NO 10445
HARDY COUNTY WEST VIRGINIA

L.A. GATES COMPANY
ENGINEERS AND CONSULTANTS
BECKLEY, WEST VIRGINIA
ROANOKE, VIRGINIA

SHEET NO. S21

DESIGNER	DRAWN	CHECKED	DATE	SCALE	REVISIONS
BMB/BAKER	RWR	GPH	SEP '03	SHOWN	

CADD FILE NAME: SCUPWSCDTL-113
PLOT SCALE: 1=1

PUBLIC ROADS DIV.	STATE DIST. NO.	STATE PROJ. NO.	FEDERAL PROJ. NO.	FISCAL YEAR	COUNTY	SHEET NO.	TOTAL SHEETS
W.V.	5	X316 -H- 100.40	APD-0484-(251)C	2003	HARDY	339	670

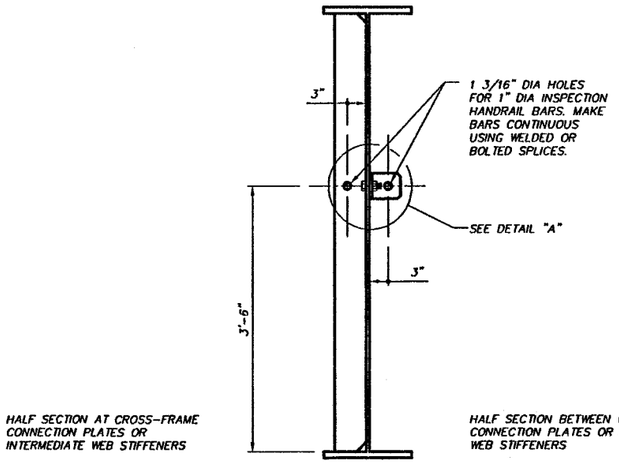

SECTION FOR INSPECTION HANDRAIL INSTALLATION
NTS

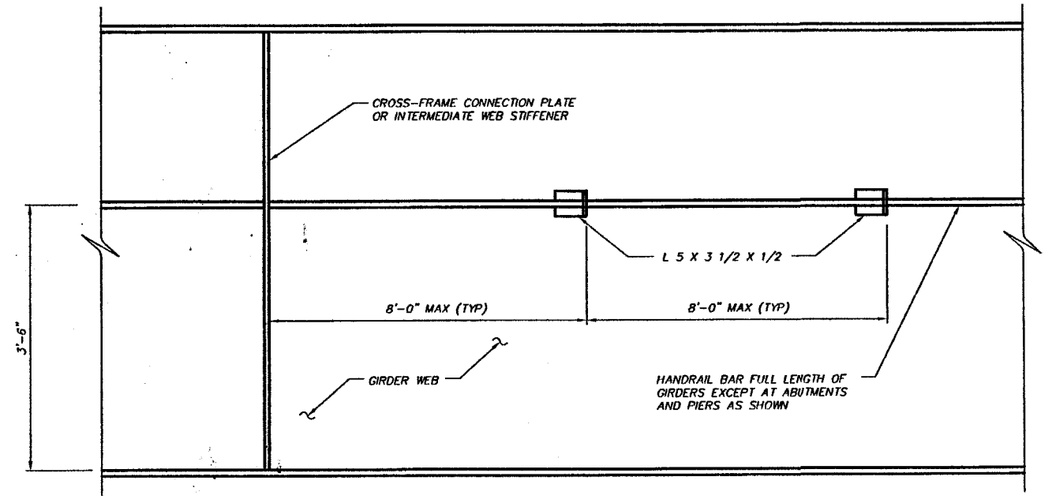

HANDRAIL ELEVATION
NTS

NOTES:

INSTALL HANDRAIL ON BOTH SIDES OF INTERIOR GIRDERS AND ON THE INSIDE OF THE EXTERIOR GIRDERS.

STEEL FOR INSPECTION HANDRAIL COMPONENTS SHALL BE AASHTO M270 GRADE 50W, UNLESS NOTED OTHERWISE.

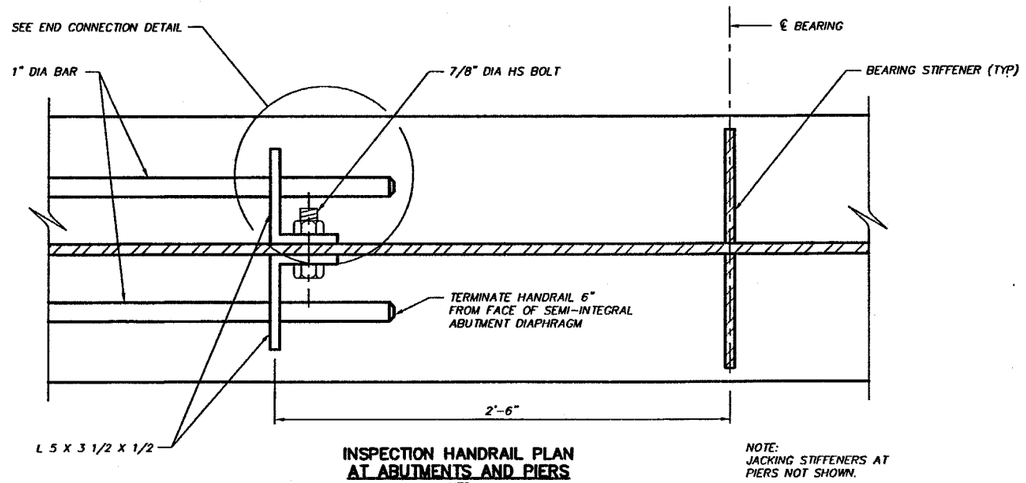

INSPECTION HANDRAIL PLAN AT ABUTMENTS AND PIERS
NTS

NOTE:
JACKING STIFFENERS AT PIERS NOT SHOWN.

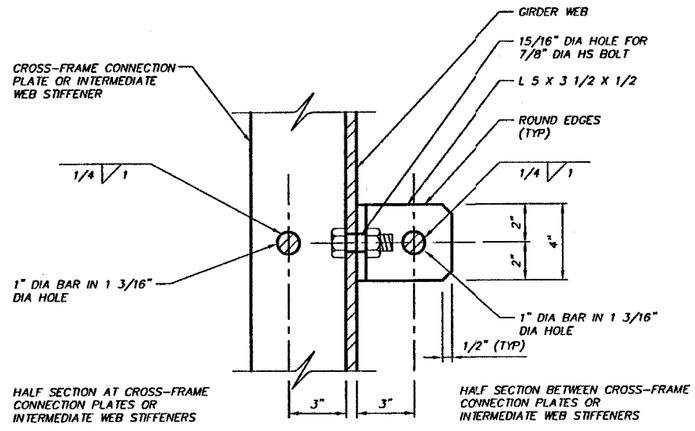

DETAIL "A"
NTS

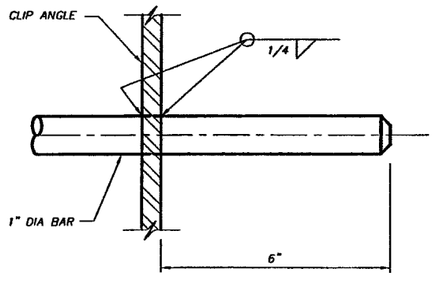

END CONNECTION DETAIL
NTS

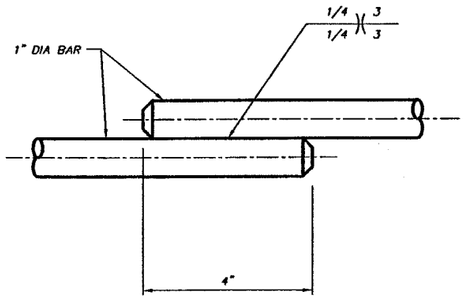

WELDED SHOP SPLICE DETAIL
NTS

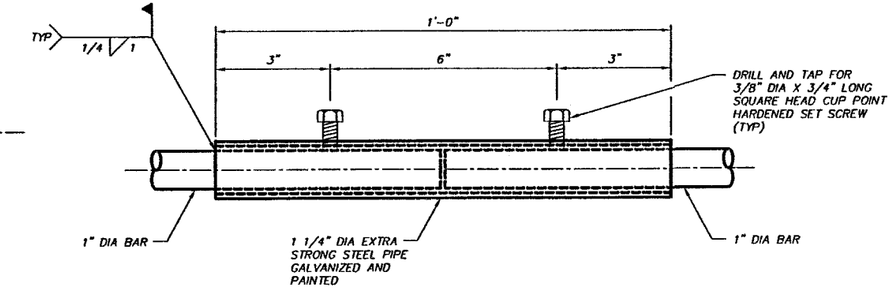

BOLTED FIELD SPLICE DETAIL
NTS

INSPECTION HANDRAIL DETAILS

WEST VIRGINIA DEPARTMENT OF TRANSPORTATION
US 220 RAMP CONNECTOR BRIDGE
BRIDGE NO 10445
HARDY COUNTY, WEST VIRGINIA

L.A. GATES COMPANY
ENGINEERS AND CONSULTANTS
BECKLEY, WEST VIRGINIA
ROANOKE, VIRGINIA

SHEET NO. **S22**

NO.	REVISION	BY	DATE

DESIGNER	DRAWN	CHECKED	DATE	SCALE	REVISIONS
WVDOT	RWR	WVDOT	SEP '03	SHOWN	

CADD FILE NAME: STNDHNSRAIL-113
PLOT SCALE: 1=1