3781-625B52M

Public Roads Div.	State Dist. No.	State Project No.	Federal Project No.	Fiscal Year	County	Sheet No.	Total Sheets
W.V.	05	X312 -H- 93.37	APD-0484 (236) C	2006	GRANT	119	389

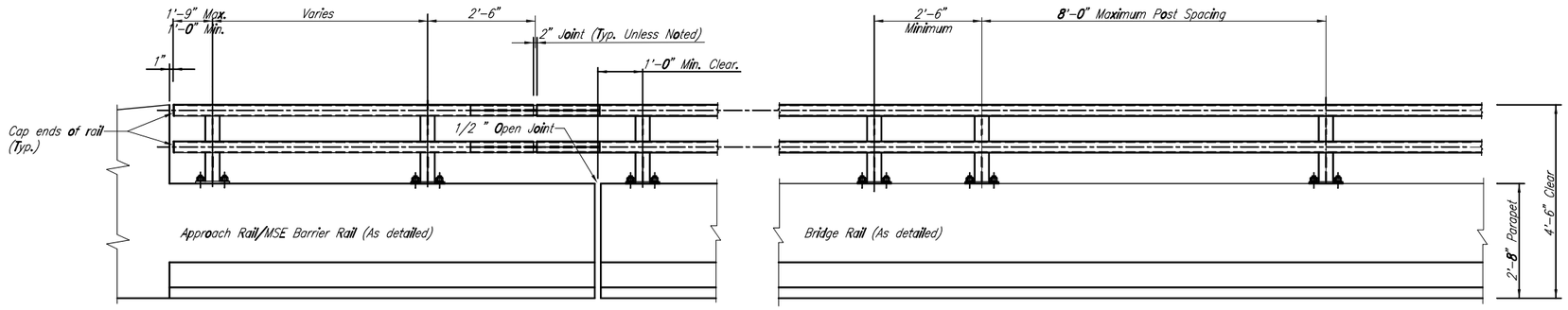

TYPICAL ELEVATION

Notes:

Aluminum material shall be in accordance with Sections 709.31 through 709.41 of the Standard Specifications.
Stainless steel bolts shall be in accordance with ASTM F593.
Stainless steel nuts shall be in accordance with ASTM F594.
Stainless steel washers shall be the same alloy as the bolts & nuts.
Anchor bolt assemblies shall be cast in place or drilled and grouted.
All parts of the assembly shall be galvanized in accordance with ASTM A153.
All exposed sharp edges shall be rounded. All rough-cut ends and edges shall be ground or filed smooth.
Rail posts shall be set normal to the roadway grade.
Curved rails shall be shop fabricated to the radius.
Elastomeric bearing pads shall be placed under each post.
The pad shall cover the entire contact area between the post and concrete and shall be neatly trimmed. The pads shall meet the requirements of Section 715.15.
Cost of anchor bolt assemblies, railposts, rails, hardware, and elastomeric bearing pads shall be included in the unit price bid for Item 617003-001, Aluminum Railing, per linear foot.

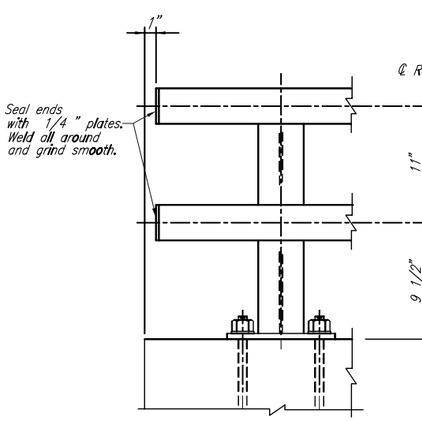

RAIL TERMINATION

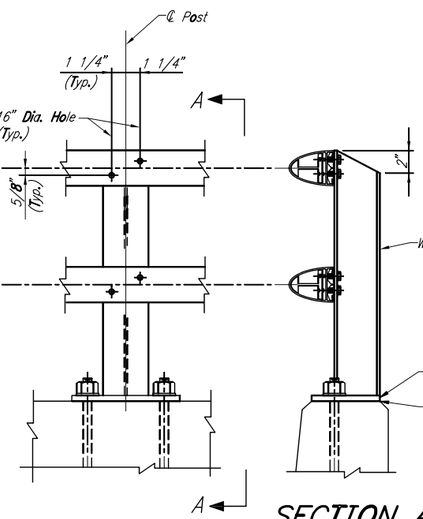

POST AND RAIL CONNECTIONS

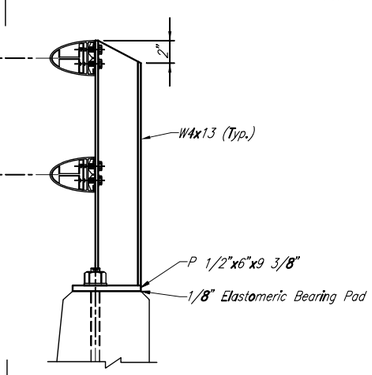

SECTION A-A

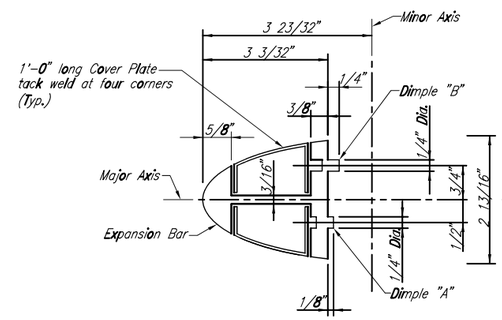

SECTION B-B
(RAIL SPLICE)

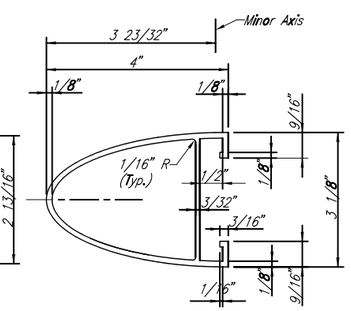

RAIL SECTION

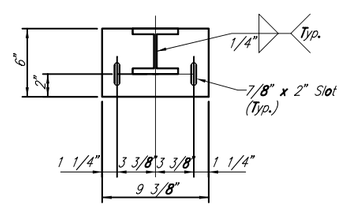

POST BASE PLATE DETAIL

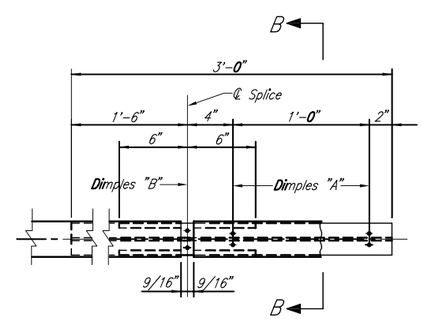

SPLICE SLEEVE

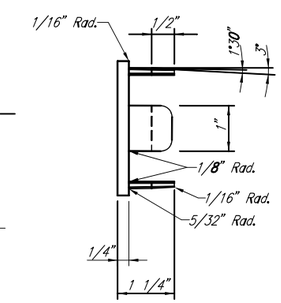

VIEW D-D

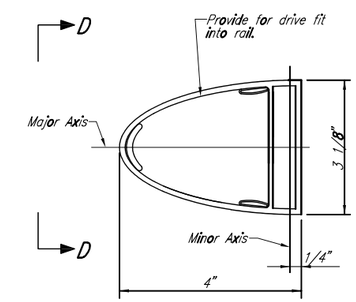

RAIL END CAP

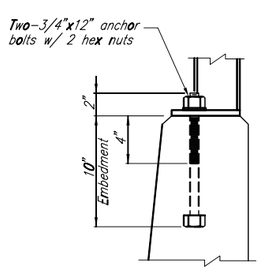

TYP. ANCHOR BOLT
(CAST-IN-PLACE ALT.)

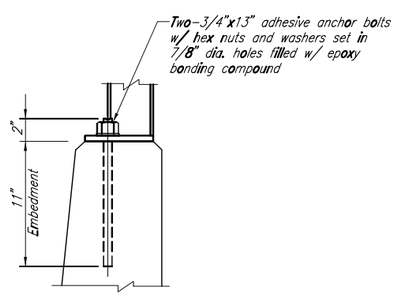

TYP. ANCHOR BOLT
(DRILLED ALTERNATE)

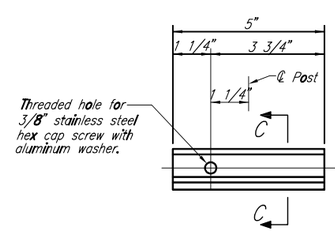

RAIL CLAMP BAR

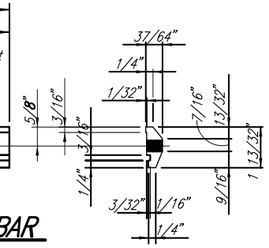

SECTION C-C

REVISION NUMBER	SHEET NUMBER	REVISIONS	DATE	BY

DESIGNED BY ____ CHECKED BY ____ DATE ____
DETAILED BY DAM CHECKED BY CMS DATE 9/04
TRACED BY ____ CHECKED BY ____ DATE ____

WVDOT - DIVISION OF HIGHWAYS
COUNTY ROUTE 5 OVER CORRIDOR H

ALUMINUM RAIL DETAILS

PROJECT NO. X312-H-93.37

NEFF, LONGEST & BEAM & ASSOC. CONSULTING ENGINEERS
CHARLESTON, W. VA. INDIANAPOLIS, IND.

DATE	SCALE	BRIDGE NO.	DRWG. NO.
	NONE	10425	21 of 27

Public Roads Div.	State Dist. No.	State Project No.	Federal Project No.	Fiscal Year	County	Sheet No.	Total Sheets
W.V.	05	X312 -H- 93.37	APD-0484 (236)C	2006	GRANT	120	389

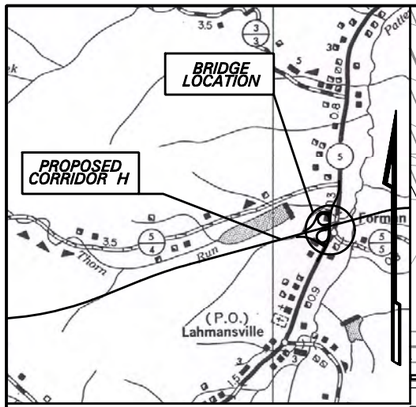

VICINITY MAP

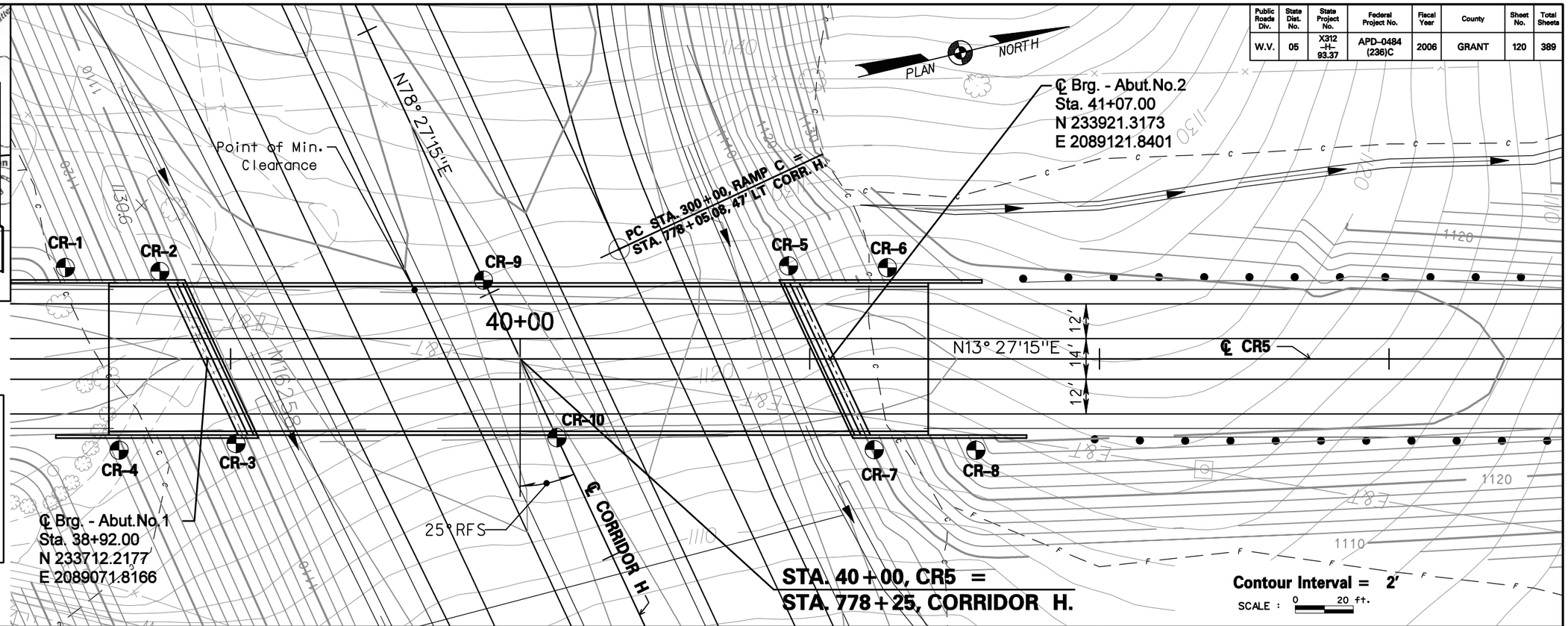

DESIGN DESIGNATION CORRIDOR H	
A.D.T.	9050 (2006)
A.D.T.	16600 (2026)
D.H.V	12%
D.	60 /40
T.	12%
V.	65 m.p.h.

DESIGN DESIGNATION CR5	
A.D.T.	655 (2006)
A.D.T.	1200 (2026)
D.H.V	
D.	
T.	
V.	40 m.p.h.

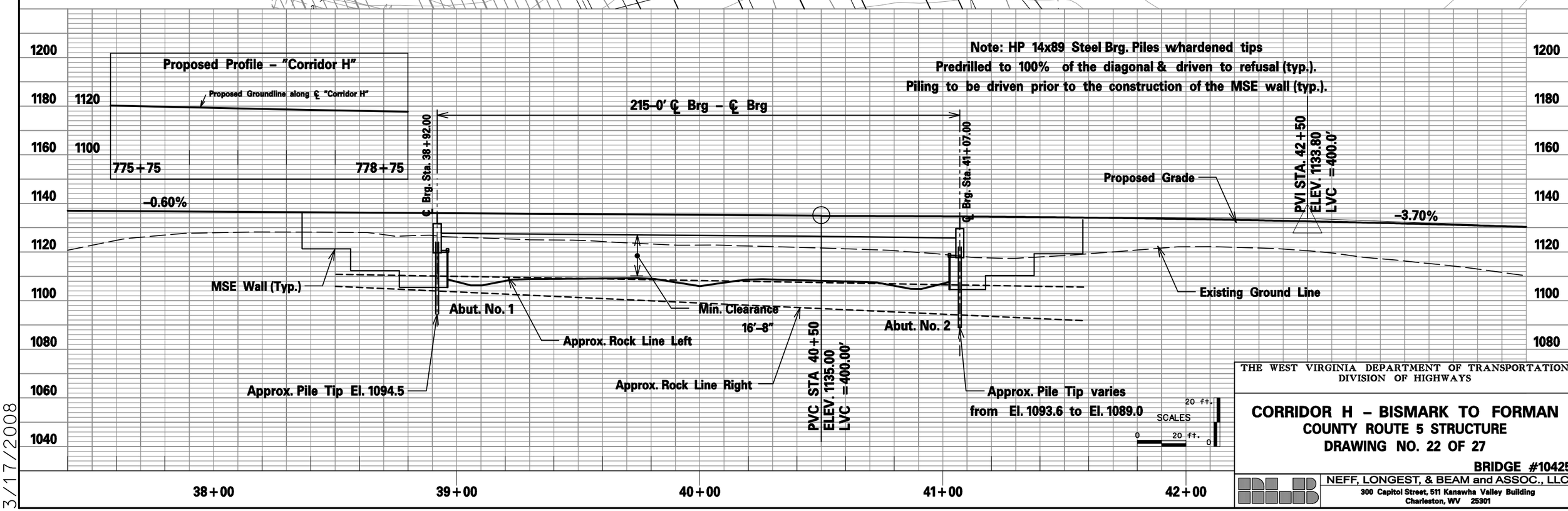

THE WEST VIRGINIA DEPARTMENT OF TRANSPORTATION
DIVISION OF HIGHWAYS

CORRIDOR H – BISMARK TO FORMAN
COUNTY ROUTE 5 STRUCTURE
DRAWING NO. 22 OF 27

BRIDGE #10425

NEFF, LONGEST, & BEAM and ASSOC., LLC
300 Capitol Street, 511 Kanawha Valley Building
Charleston, WV 25301

3/17/2008

CR55801

Public Roads Div.	State Dist. No.	State Project No.	Federal Project No.	Fiscal Year	County	Sheet No.	Total Sheets
W.V.	05	X312 -H- 93.37	APD-0484 (236) C	2006	GRANT	121	389

1110 DATUM

BORING CR-1
STA.777+30
129' Rt.
ELEV.1128.9

Description	ELEVATION	SAMPLES	BLOWS FOR LAST 12" OR % ROCK RECOVERY	RQD
TOPSOIL	1128.9 / 1128.6		10	
Brown SILTY CLAY w/ some rock fragments, moist, medium stiff to stiff			6	
	1118.2		55	
Brown and gray CLAYEY SHALE, soft			50/5"	
			50/3"	
	1107.2		100%	34
Gray SILTY SHALE w/ an approx. dip angle of 40 degrees, medium hard to hard			90%	0
	1093.6		100%	70

Bottom of Test Boring @ 35.3 ft.

BORING CR-2
STA.777+45
100' Rt.
ELEV.1129.5

Description	ELEVATION	SAMPLES	BLOWS FOR LAST 12" OR % ROCK RECOVERY	RQD
TOPSOIL	1129.5 / 1129.2		8	
Brown SILTY CLAY w/ some rock fragments, moist, medium stiff to very stiff			20	
	1118.8		53	
Brown and gray CLAYEY SHALE, weathered, soft			50/3"	
	1109.5		50/2"	
Gray SILTY SHALE, medium hard to hard			100%	54
			94%	76
	1094.3		100%	76

Bottom of Test Boring @ 35.2 ft.
① Approximate Pile Tip El.1094.5

BORING CR-3
STA.778+10
100' Rt.
ELEV.1123.9

Description	ELEVATION	SAMPLES	BLOWS FOR LAST 12" OR % ROCK RECOVERY	RQD
TOPSOIL	1123.9 / 1123.6		12	
Brown SILTY CLAY w/ some rock fragments, moist, stiff to very stiff			30	
	1113.9		53	
Brown and gray SHALE, weathered, soft			80	
	1102.6		50/3"	
Gray SILTY SHALE w/ an approx. dip angle of 45 degrees, medium hard to hard			88%	22
			100%	86
	1088.6		100%	25

Bottom of Test Boring @ 35.3 ft.
② Approximate Pile Tip El.1094.5

BORING CR-4
STA.777+95
139' Rt.
ELEV.1126.7

Description	ELEVATION	SAMPLES	BLOWS FOR LAST 12" OR % ROCK RECOVERY	RQD
TOPSOIL	1126.7 / 1126.4		6	
Brown SILTY CLAY, moist, medium stiff			39	
	1120.3		50/5"	
Brown and gray SHALE, weathered, soft to medium hard			74%	8
-highly weathered, very soft (6.4-11.0 ft.)			64%	0
	1102.6		100%	40
Gray SILTY SHALE w/ an approx. dip angle of 45 degrees, medium hard to hard			100%	50
	1090.8		100%	100

Bottom of Test Boring @ 35.9 ft.

BORING CR-5
STA.778+35
97' Lt.
ELEV.1125.8

Description	ELEVATION	SAMPLES	BLOWS FOR LAST 12" OR % ROCK RECOVERY	RQD
TOPSOIL	1125.8 / 1125.5		8	
Brown SILTY CLAY w/ some rock fragments, moist, medium stiff to very stiff			17	
	1115.3		61	
Brown and gray CLAYEY SHALE, soft			50/2"	
	1105.8		50/3"	
Gray SILTY SHALE w/ an approx. dip angle of 45 degrees, medium hard to hard			70%	26
-occasional silty shale lenses, medium hard (20.0-24.0 ft.)			100%	84
	1090.5		100%	80

Bottom of Test Boring @ 35.3 ft.
③ Approximate Pile Tip El.1093.6

▼ Blow counts taken from Standard Penetration Tests.
▼ Indicates ground water after 24 hrs.

REVISION NUMBER	SHEET NUMBER	REVISIONS	DATE	BY

DESIGNED BY ____ CHECKED BY ____ DATE ____
DETAILED BY DAM CHECKED BY CMS DATE 9/04
TRACED BY ____ CHECKED BY ____ DATE ____

WVDOT – DIVISION OF HIGHWAYS
COUNTY ROUTE 5 OVER CORRIDOR H

SOIL BORINGS

PROJECT NO. X312-H-93.37

NEFF, LONGEST & BEAM & ASSOC.
CONSULTING ENGINEERS
CHARLESTON, W. VA.
INDIANAPOLIS, IND.

DATE	SCALE	BRIDGE NO.	DRWG. NO.
	1"=5'	10425	23 of 27

CR55B02

Public Roads Div.	State Dist. No.	State Project No.	Federal Project No.	Fiscal Year	County	Sheet No.	Total Sheets
W.V.	05	X312 -H- 93.37	APD-0484 (236) C	2006	GRANT	122	389

1110 DATUM

BORING CR-6
STA.778+50
128' Lt.
ELEV.1123.6

Description	Elevation	Blows for last 12" or % rock recovery	RQD
TOPSOIL	1123.6 / 1123.3		
Brown SILTY CLAY w/ some rock fragments, moist, medium stiff to stiff		7	
		15	
	1112.3	73	
Brown and gray CLAYEY SHALE, weathered, soft		50/1"	
	1103.6	50/3"	
Gray SILTY SHALE w/ an approx. dip angle of 45 degrees, medium hard to hard		98%	50
		100%	70
		100%	80
	1088.3		

Bottom of Test Boring @ 35.3 ft.

BORING CR-7
STA.779+05
97' Lt.
ELEV.1112.8

Description	Elevation	Blows for last 12" or % rock recovery	RQD
TOPSOIL	1112.8 / 1112.5		
Brown SILTY CLAY w/ some rock fragments, moist, soft to hard		4	
		22	
-with some shale fragments (10.0-15.3 ft.)		36	
	1097.3	76	
Brown and gray SHALE, weathered, soft -soft to medium hard (18.0-20.3 ft.)	1092.5	50/3"	
Gray SILTY SHALE w/ an approx. dip angle of 35 degrees, occasional, siltstone lenses, medium hard to hard		92%	52
		100%	66
		92%	64
	1077.5		

Bottom of Test Boring @ 35.3 ft.
④ Approximate ile Tip El.1089.0

BORING CR-8
STA.779+20
129' Lt.
ELEV.1114.4

Description	Elevation	Blows for last 12" or % rock recovery	RQD
TOPSOIL	1114.4 / 1114.1		
Brown SILTY CLAY w/ some rock fragments, moist, medium stiff to very stiff		8	
		12	
		17	
	1098.9	58	
Brown and gray CLAYEY SHALE, weathered, soft -gray, soft to medium hard (20.0-23.0 ft.)		50/2"	
	1091.4	100%	0
Gray SILTY SHALE w/ an approx. dip angle of 40 degrees, medium hard to hard		100%	34
		100%	8
		100%	12
	1074.2		

Bottom of Test Boring @ 40.2 ft.

BORING CR-9
STA.777+95
℄
ELEV.1128.1

Description	Elevation	Blows for last 12" or % rock recovery	RQD
TOPSOIL	1128.1 / 1127.8	8	
Brown SILTY CLAY w/ some rock fragments, moist, medium stiff to very stiff		19	
	1117.9	64	
Brown and gray CLAYEY SHALE, weathered, soft		50/3"	
	1108.1	50/2"	
Gray SILTY SHALE w/ an approx. dip angle of 45 degrees, medium hard to hard		100%	50
		100%	66
		100%	20
	1092.9		

Bottom of Test Boring @ 35.2 ft.

BORING CR-10
STA.778+55
℄
ELEV.1117.8

Description	Elevation	Blows for last 12" or % rock recovery	RQD
TOPSOIL	1117.8 / 1117.5	10	
Brown SILTY CLAY w/ some rock fragments, moist, stiff to very stiff		22	
	1106.8	63	
Brown and gray CLAYEY SHALE, weathered, soft -soft to medium hard (15.9-23.5 ft.)		50/5"	
		50/1"	
	1094.3	94%	16
Gray SILTY SHALE w/ an approx. dip angle of 35 degrees, medium hard to hard		98%	22
		100%	28
	1082.7		

Bottom of Test Boring @ 35.1 ft.

Blow counts taken from Standard Penetration Tests.
▼ Indicates ground water after 24 hrs.

REVISION NUMBER	SHEET NUMBER	REVISIONS	DATE	BY

DESIGNED BY ____ CHECKED BY ____ DATE ____
DETAILED BY DAM CHECKED BY CMS DATE 9/04
TRACED BY ____ CHECKED BY ____ DATE ____

WVDOT – DIVISION OF HIGHWAYS
COUNTY ROUTE 5 OVER CORRIDOR H

SOIL BORINGS

PROJECT NO. X312-H-93.37

NEFF, LONGEST & BEAM & ASSOC.
CONSULTING ENGINEERS
CHARLESTON, W. VA.
INDIANAPOLIS, IND.

DATE	SCALE	BRIDGE NO.	DRWG. NO.
	1"=5'	10425	24 of 27

3781-625B60M

Public Roads Div.	State Dist. No.	State Project No.	Federal Project No.	Fiscal Year	County	Sheet No.	Total Sheets
W.V.	05	X312 -H- 93.37	APD-0484 (236) C	2006	GRANT	123	389

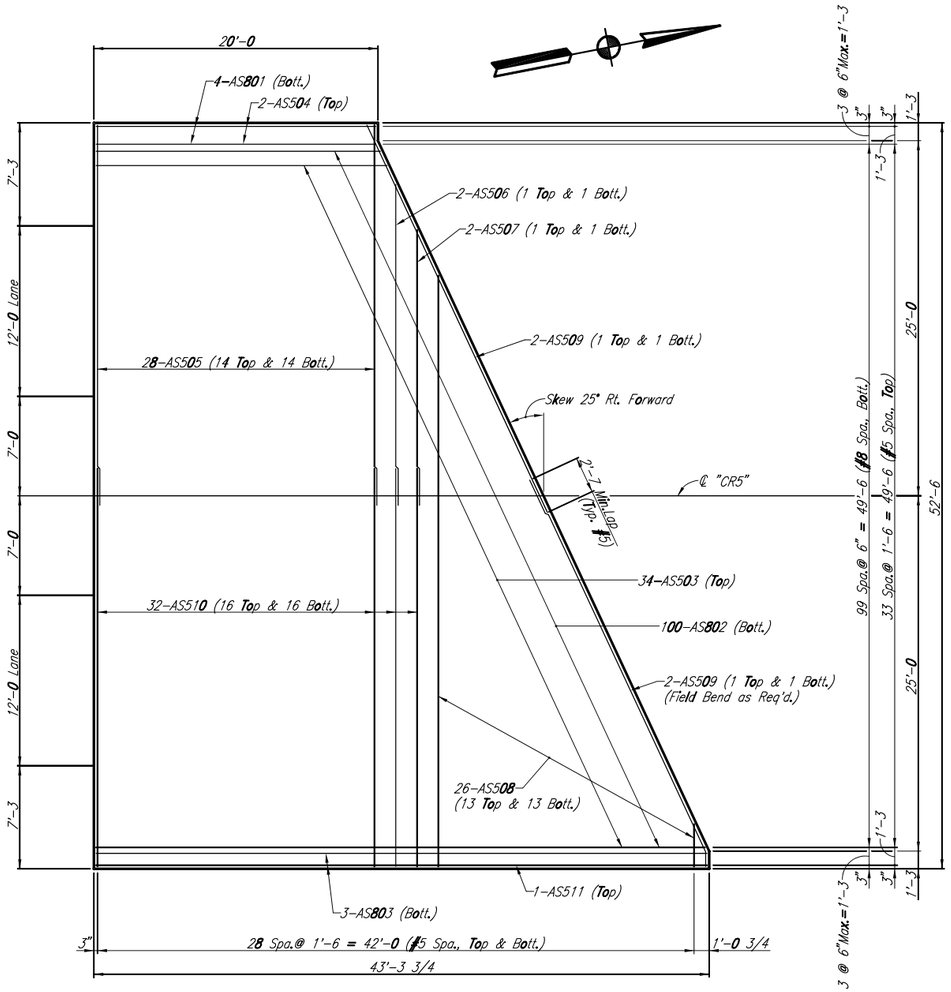

APPROACH SLAB PLAN-ABUTMENT NO.1

(Abutment No.2, same by 180°)
Scale: 3/16"=1'-0

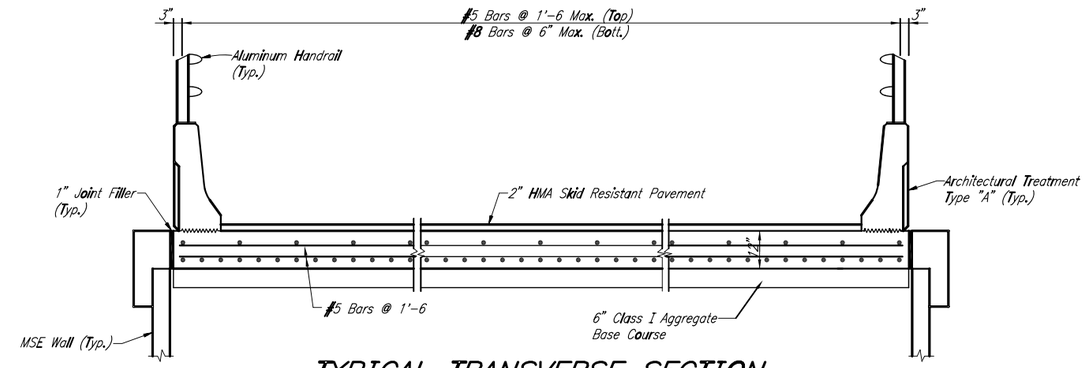

TYPICAL TRANSVERSE SECTION

Scale: 1/2"=1'-0

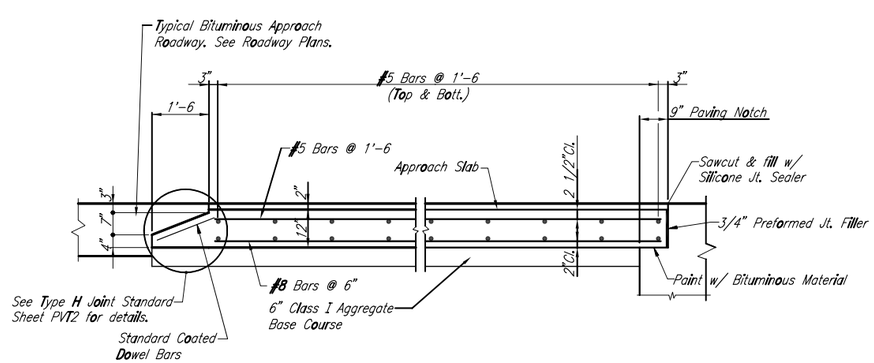

TYPICAL LONGITUDINAL SECTION

Scale: 1/2"=1'-0

Notes:

The approach slabs shall be in accordance with Article 502 of the Standard Specifications, except as noted.
A 6" Base Course shall be provided under the approach slabs. Payment shall be made as Item 307001-000, "Class I Aggregate Base Course".
All reinforcing steel shall be in accordance with ASTM A615, Grade 60.
Preformed Joint Filler shall conform to A.A.S.H.T.O. M213.
Curing of the approach slabs to be by burlap and water in accordance with the Standard Specifications. The use of vapor barrier burlap will be permitted.
The cost of concrete approach slabs, reinforcing steel, standard coated dowel bars, and preformed expansion joint material shall be included in the unit price bid for Item 502001-12. (See roadway plans)
All concrete in the approach slabs shall be Class B Concrete.
All reinforcing bars in Approach Slabs and Type "F" Railings shall be Epoxy Coated.
All concrete in Type "F" Parapets shall be Class H Concrete, Architectural.
For aluminum railing details, see Dwg.21
For railing details & Bill of Materials, see Dwg.26
For MSE Wall details, see Dwgs.7-10

REVISION NUMBER	SHEET NUMBER	REVISIONS	DATE	BY

DESIGNED BY _____ CHECKED BY _____ DATE _____
DETAILED BY DAM CHECKED BY CMS DATE 9/04
TRACED BY _____ CHECKED BY _____ DATE _____

WVDOT - DIVISION OF HIGHWAYS
COUNTY ROUTE 5 OVER CORRIDOR H

APPROACH SLAB DETAILS

PROJECT NO. X312-H-93.37

NEFF, LONGEST & BEAM & ASSOC. CONSULTING ENGINEERS — CHARLESTON, W. VA. INDIANAPOLIS, IND.

DATE	SCALE	BRIDGE NO.	DRWG. NO.
	AS NOTED	10425	25 of 27

3781-625B61M

Public Roads Div.	State Dist. No.	State Project No.	Federal Project No.	Fiscal Year	County	Sheet No.	Total Sheets
W.V.	05	X312 -H- 93.37	APD-0484 (236) C	2006	GRANT	124	389

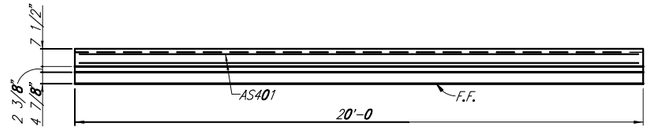

PLAN

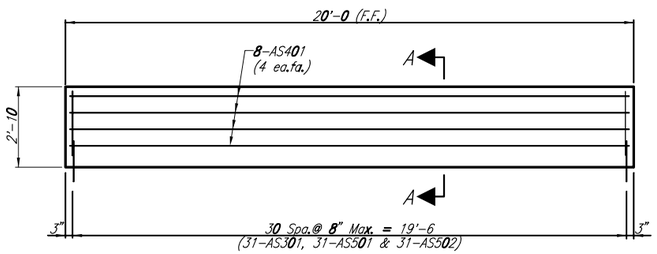

TYPE F PARAPET (20'-0)

Scale: 3/8"=1'-0

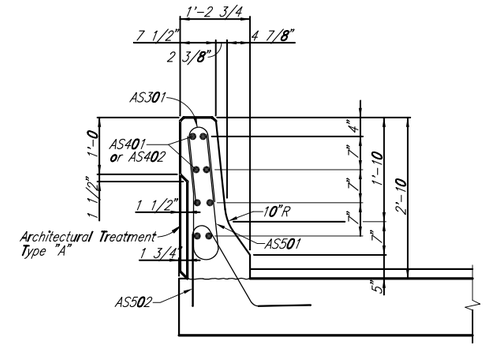

SECTION A-A

Scale: 3/4"=1'-0

CUTTING INCREMENTS

1. 8 1/8" Cutting Increment (1 Set, 34 Ea.Set)
2. 2 3/4" ± Cutting Increment (1 Set, 100 Ea.Set)
3. 3'-2 9/16 ± Cutting Increment (2 Sets, 13 Ea.Set)

EPOXY COATED REINFORCING BAR BILL
FOR ONE APPROACH SLAB

	MARK	TYPE	SIZE	NO.	LENGTH
	AS301	1	#3	97	2'-10
	AS401	Str.	#4	8	19'-8
	AS402	Str.	#4	8	43'-0
	AS501	2	#5	97	4'-7
	AS502	3	#5	97	4'-3
1	AS503	Str.	#5	34	20'-6 to 42'-10
	AS504	Str.	#5	2	19'-8
	AS505	Str.	#5	28	26'-9
	AS506	Str.	#5	2	22'-7
	AS507	Str.	#5	2	19'-5
3	AS508	Str.	#5	26	3'-0 to 41'-7
	AS509	Str.	#5	4	30'-1
	AS510	Str.	#5	32	28'-0
	AS511	Str.	#5	1	43'-0
	AS801	Str.	#8	4	19'-8
2	AS802	Str.	#8	100	20'-0 to 42'-10
	AS803	Str.	#8	3	43'-0

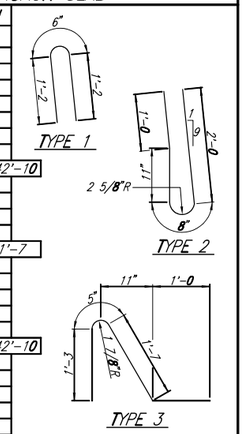

QUANTITIES

ITEM	UNIT	QUANTITY
EPOXY COATED REINFORCING STEEL	LB.	14016

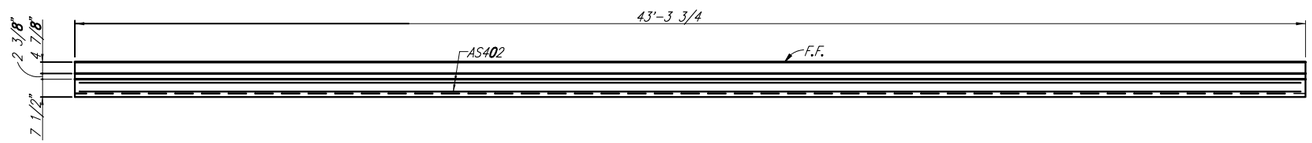

PLAN

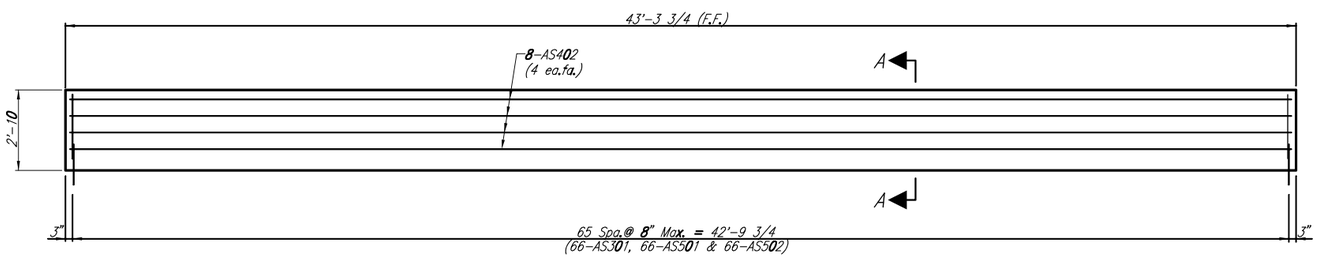

TYPE F PARAPET (43'-3 3/4)

Scale: 3/8"=1'-0

*ESTIMATE OF QUANTITIES

	ITEM	DESCRIPTION	ABUT.NO.1	ABUT.NO.2	TOTAL
	307001-000	Class I Aggregate Base Course	32 CY.	32 CY.	64 CY.
	502001-012	12 Inch Portland Cement Concrete Approach Slab	194 SY.	194 SY.	388 SY.
	601009-003	Class H Concrete, Architectural	11 CY.	11 CY.	22 CY.
#	617003-001	Aluminum Railing	64 LF.	64 LF.	128 LF.
	401002-011	Superpave HMA Skid Resistant Pavement, Type I	20 TON	20 TON	40 TON

*For Information Only. See Roadway Estimate of Quantities.
See Bridge Estimate of Quantities.

Notes:
All galvanization shall be in accordance with AASHTO M111.
All reinforcing steel to be Epoxy Coated.
For additional details, see Dwg.25
For Architectural Treatment Type "A" Details, see Dwg.16

REVISION NUMBER	SHEET NUMBER	REVISIONS	DATE	BY

DESIGNED BY ____ CHECKED BY ____ DATE ____
DETAILED BY DAM CHECKED BY CMS DATE /04
TRACED BY ____ CHECKED BY ____ DATE ____

WVDOT – DIVISION OF HIGHWAYS
COUNTY ROUTE 5 OVER CORRIDOR H

APPROACH SLAB DETAILS

PROJECT NO. X312-H-93.37

NEFF, LONGEST & BEAM & ASSOC.
CONSULTING ENGINEERS
CHARLESTON, W. VA.
INDIANAPOLIS, IND.

DATE	SCALE	BRIDGE NO.	DRWG. NO.
	AS NOTED	10425	26 of 27

3781-62587DM

Public Roads Div.	State Dist. No.	State Project No.	Federal Project No.	Fiscal Year	County	Sheet No.	Total Sheets
W.V.	05	X312 -H- 93.37	APD-0484 (236) C	2006	GRANT	125	389

INTERIOR GIRDER	SECTION PROPERTIES									NON-COMPOSITE SECTION		COMPOSITE SECTION (3n)		COMPOSITE SECTION (n)		UNFACTORED DESIGN MOMENTS AND SHEARS										DISTRIBUTION FACTORS	
LOCATION	TOP FLANGE THICKNESS (in)	TOP FLANGE WIDTH (in)	TOP FLANGE Fy (ksi)	BOTT. FLANGE THICKNESS (in)	BOTT. FLANGE WIDTH (in)	BOTT. FLANGE Fy (ksi)	WEB DEPTH (in)	WEB THICKNESS (in)	WEB Fy (ksi)	S-TOP FLANGE (in^3)	S-BOTT. FLANGE (in^3)	S-TOP FLANGE (in^3)	S-BOTT. FLANGE (in^3)	S-TOP FLANGE (in^3)	S-BOTT. FLANGE (in^3)	DL1 MOMENT (k-ft)	DL1 SHEAR (k)	DL2 MOMENT (k-ft)	DL2 SHEAR (k)	LL+I MOMENT (k-ft)	LL+I SHEAR (k)	LL+I MOMENT (k-ft)	LL+I SHEAR (k)	LL+I MOMENT (k-ft)	LL+I SHEAR (k)	LL+I MOMENT (k-ft)	LL+I SHEAR (k)	MOMENT	SHEAR
A-℄ Abut.No.1	1.375	22.0	50	1.625	22.0	70	90.0	0.625	50	3624	3944	6620	4451	13095	4823	0	197	0	42	0	113	0	113	0	58	0	79	0.783	1.060
B-55'-0	1.375	22.0	50	1.625	22.0	70	90.0	0.625	50	3624	3944	6620	4451	13095	4823	8042	96	1712	21	3166	70	3166	70	1737	43	2341	58	0.783	1.060
C-82'-6	1.625	22.0	50	2.000	22.0	70	90.0	0.625	50	4145	4643	7148	5149	13551	5544	9944	46	2117	10	3929	53	3929	52	2143	36	2885	47	0.793	1.060
D-107'-6	2.000	22.0	50	2.000	22.0	70	90.0	0.625	50	4770	4770	7722	5195	13975	5554	10587	0	2253	0	4242	0	4242	0	2303	0	3084	0	0.793	
E-132'-6	1.625	22.0	50	2.000	22.0	70	90.0	0.625	50	4145	4643	7148	5149	13551	5544	9944	46	2117	10	3929	53	3929	52	2143	36	2885	47	0.793	1.060
F-160'-0	1.375	22.0	50	1.625	22.0	70	90.0	0.625	50	3624	3944	6620	4451	13095	4823	8042	96	1712	21	3166	70	3166	70	1737	43	2341	58	0.783	1.060
G-℄ Abut.No.2	1.375	22.0	50	1.625	22.0	70	90.0	0.625	50	3624	3944	6620	4451	13095	4823	0	197	0	42	0	113	0	113	0	58	0	79	0.783	1.060
																				HS-20		H-20		TYPE 3		3S2			

EXTERIOR GIRDER	SECTION PROPERTIES									NON-COMPOSITE SECTION		COMPOSITE SECTION (3n)		COMPOSITE SECTION (n)		UNFACTORED DESIGN MOMENTS AND SHEARS										DISTRIBUTION FACTORS	
LOCATION	TOP FLANGE THICKNESS (in)	TOP FLANGE WIDTH (in)	TOP FLANGE Fy (ksi)	BOTT. FLANGE THICKNESS (in)	BOTT. FLANGE WIDTH (in)	BOTT. FLANGE Fy (ksi)	WEB DEPTH (in)	WEB THICKNESS (in)	WEB Fy (ksi)	S-TOP FLANGE (in^3)	S-BOTT. FLANGE (in^3)	S-TOP FLANGE (in^3)	S-BOTT. FLANGE (in^3)	S-TOP FLANGE (in^3)	S-BOTT. FLANGE (in^3)	DL1 MOMENT (k-ft)	DL1 SHEAR (k)	DL2 MOMENT (k-ft)	DL2 SHEAR (k)	LL+I MOMENT (k-ft)	LL+I SHEAR (k)	LL+I MOMENT (k-ft)	LL+I SHEAR (k)	LL+I MOMENT (k-ft)	LL+I SHEAR (k)	LL+I MOMENT (k-ft)	LL+I SHEAR (k)	MOMENT	SHEAR
A-℄ Abut.No.1	1.375	22.0	50	1.625	22.0	70	90.0	0.625	50	3624	3944	6397	4427	12355	4798	0	181	0	42	0	100	0	100	0	51	0	69	0.918	0.936
B-55'-0	1.375	22.0	50	1.625	22.0	70	90.0	0.625	50	3624	3944	6397	4427	12355	4798	7384	88	1712	21	3725	62	3725	62	2045	38	2755	51	0.918	0.936
C-82'-6	1.625	22.0	50	2.000	22.0	70	90.0	0.625	50	4145	4643	6924	5124	12820	5517	9130	42	2117	10	4606	46	4606	46	2513	32	3382	42	0.918	0.936
D-107'-6	2.000	22.0	50	2.000	22.0	70	90.0	0.625	50	4770	4770	7500	5173	13258	5528	9720	0	2253	0	4904	0	4904	0	2663	0	3565	0	0.918	
E-132'-6	1.625	22.0	50	2.000	22.0	70	90.0	0.625	50	4145	4643	6924	5124	12820	5517	9130	42	2117	10	4606	46	4606	46	2513	32	3382	42	0.918	0.936
F-160'-0	1.375	22.0	50	1.625	22.0	70	90.0	0.625	50	3624	3944	6397	4427	12355	4798	7384	88	1712	21	3725	62	3725	62	2045	38	2755	51	0.918	0.936
G-℄ Abut.No.2	1.375	22.0	50	1.625	22.0	70	90.0	0.625	50	3624	3944	6397	4427	12355	4798	0	181	0	42	0	100	0	100	0	51	0	69	0.918	0.936
																				HS-20		H-20		TYPE 3		3S2			

RATING EXAMPLE

This sample calculation is performed at section Ⓑ of Exterior Girder, bottom flange.

1. Obtain the primary LL+I moment for the rating vehicle using a line girder analysis with a live load distribution factor = 1 lane (= 2 wheels). Say M = 3725 K-Ft. (LRFD Distribution Factors were used, see Table)

2. Using the primary dead load moments from the table, the live load moment from step 2.

   The primary bending moment (M) is:

   (M)DL1 = 7384 K-FT
   (M)DL2 = 1712 K-FT
   (M)LL+I = 3725 K-FT

3. Calculate the Operating and Inventory Rating Factors as follows:

   Inventory Rating:

   $$IR = \frac{Mn - 1.30\ (M)DL1 - 1.30\ (M)DL2}{2.17\ (M)LL+I}$$

   IR = 1.65

   Operating Rating:

   OR = 5/3 x (IR Factor)
   OR = 5/3 x 1.65 = 2.75

4. Calculate the Rating:

   Rating = (Rating Factor)(G.V.W. of rating vehicle)

   OR = (2.75)(36 tons) = 99.0 tons
   IR = (1.65)(36 tons) = 59.4 tons

Notes:

1. If significant section loss has occured, recalculate the girder section properties to reflect those losses.

2. Live load HS-20. Two lanes loaded.

3. DL1 moment and shear is due to weight of steel girders, crossframes and details, structural deck concrete, haunches and stay-in-place forms. These force effects are resisted by the non-composite girder.

4. DL2 moment and shear is due to weight of parapets and future wearing surface. These force effects are resisted by the composite girder.

5. LL+I moments and shears provided are critical (maximum) forces at the specific location indicated.

LEGEND

M = Primary bending moment (K-FT)

Mn = Maximum bending strength of member (K-FT)

BRIDGE LOAD RATINGS				
Truck	HS20	H20	Type 3	3S2
Inventory	51	28	65	70
Operating	85	47	108	116

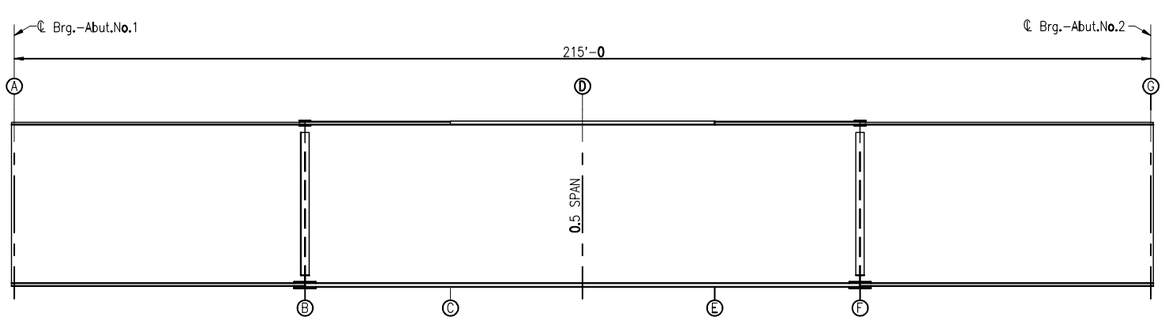

GIRDER ELEVATION

REVISION NUMBER	SHEET NUMBER	REVISIONS	DATE	BY

DESIGNED BY JAP CHECKED BY CMS DATE /04
DETAILED BY DAM CHECKED BY CMS DATE 9/04
TRACED BY CHECKED BY DATE

WVDOT – DIVISION OF HIGHWAYS
COUNTY ROUTE 5 OVER CORRIDOR H
LOAD RATING
SECTION PROPERTIES
PROJECT NO. X312-H-93.37
NEFF, LONGEST & BEAM & ASSOC. CONSULTING ENGINEERS
CHARLESTON, W. VA. INDIANAPOLIS, IND.

DATE	SCALE	BRIDGE NO.	DRWG. NO.
	NONE	10425	27 of 27

3781-629820M

Public Roads Div.	State Dist. No.	State Project No.	Federal Project No.	Fiscal Year	County	Sheet No.	Total Sheets
W.V.	05	X312 -H- 93.37	APD-0484 (236) C	2006	GRANT	126	389

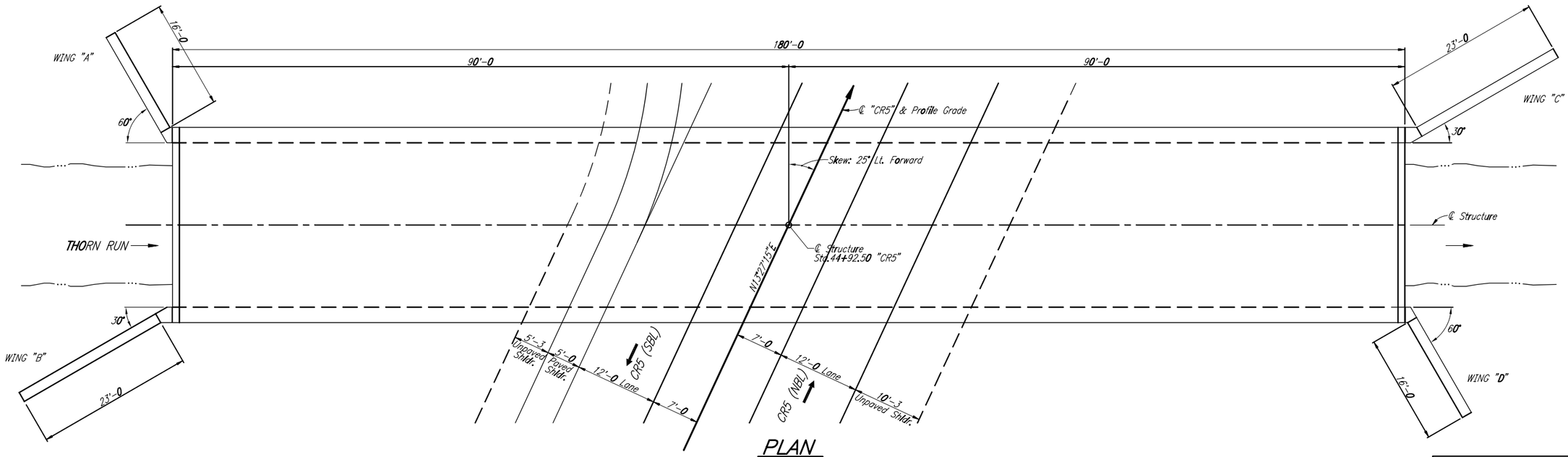

PLAN

HYDRAULIC DATA

Q100 Discharge	695 cfs
Q100 H.W. Elev.	1093.5
Q100 Velocity	8.6 ft/s

INDEX OF SHEETS

DWG. NO.	DESCRIPTION
1	General Plan & Index of Sheets
2	Notes & Quantities
3	Substructure Layout
4-7	Structure Details
8	Situation Plan
9	Soil Borings

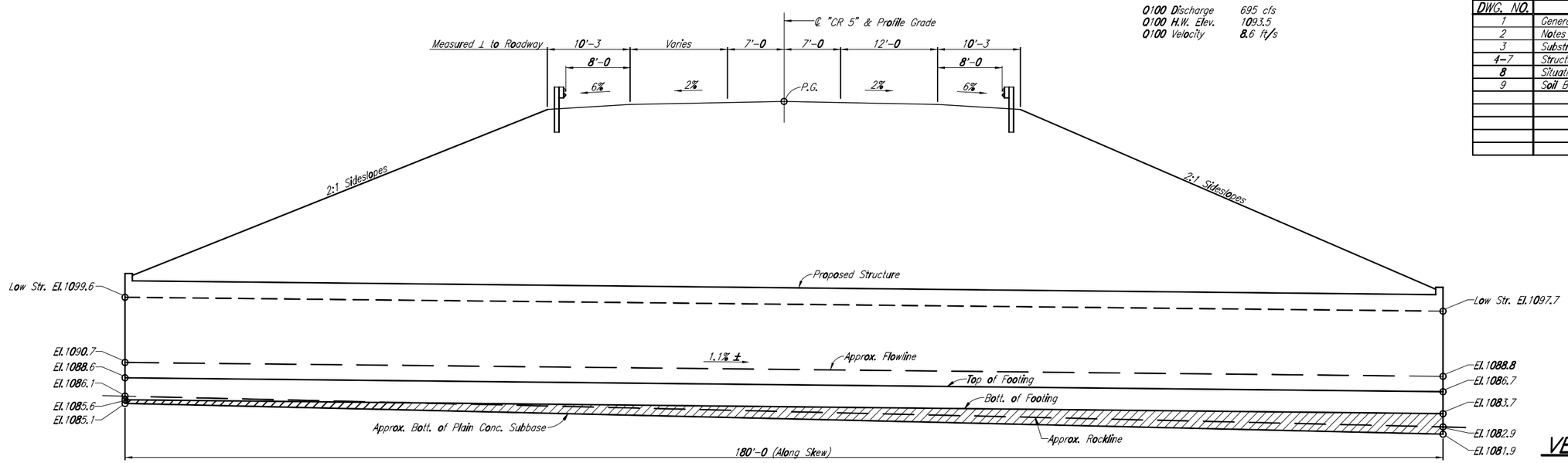

ELEVATION

Note:
Hatched Area indicates Plain Concrete Subbase.

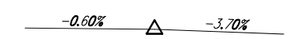

P.V.I. STA.42+50 "CR5"
ELEV.=1133.80
V.C.L.=400'

VERTICAL CURVE DATA

REVISION NUMBER	SHEET NUMBER	REVISIONS	DATE	BY

DESIGNED BY AJR CHECKED BY CMS DATE 9/04
DETAILED BY DAM CHECKED BY AJR DATE 9/04
TRACED BY CHECKED BY DATE

WVDOT – DIVISION OF HIGHWAYS
COUNTY ROUTE 5 OVER THORN RUN

GENERAL PLAN

PROJECT NO. X312-H-93.37

NEFF, LONGEST & BEAM & ASSOC.
CONSULTING ENGINEERS
CHARLESTON, W. VA.
INDIANAPOLIS, IND.

DATE	SCALE	CULVERT NO.	DRWG. NO.
	1/8"=1'-0	10426	1 of 9

3781-629802M

Public Roads Div.	State Dist. No.	State Project No.	Federal Project No.	Fiscal Year	County	Sheet No.	Total Sheets
W.V.	05	X312 -H- 93.37	APD-0484 (236) C	2006	GRANT	127	389

GOVERNING SPECIFICATIONS

The West Virginia Department of Transportation, Division of Highways, Standard Specifications, Roads and Bridges adopted 2000, as amended by the West Virginia Division of Highways, Supplemental Specifications dated January 1, 2003, the contract documents, and the contract plans are the governing provisions applicable to this project.

DESIGN

The structure is designed by the Load and Resistance Factor Design Method in accordance with the AASHTO LRFD Bridge Design Specifications, 2nd Edition, 1998 with the 2003 Interims along with the Three-Sided Reinforced Concrete Culvert Special Provisions.

DESIGN LOADS

Dead Load: Calculated weight of structure including 25 feet of fill (measured from top of structure to profile grade.

Live Load: HL-93.

Earthquake: Seismic Zone 1

Thermal Forces: Temperature Range 0° F to 80° F
Normal Erection Temperature 50° F

DESIGN STRENGTHS

CONCRETE

Class K f'c = 4,000 psi
Class B f'c = 3,000 psi
Class D f'c = 2,000 psi

REINFORCEMENT

AASHTO M31, Grade 60 Fy = 60,000 psi

CONCRETE

All concrete shall be Class B, Class D or Class K, unless otherwise noted.

Concrete in structure and wingwalls to be Class K.

Concrete in footings to be Class B.

Concrete in plain concrete subbase to be Class D.

Concrete shall be cured in accordance with Section 601.12 of the Standard Specifications. All concrete shall be wet cured not less than 7 days. Burlap shall conform to Section 707.7 of the Standard Specifications.

The Contractor is prohibited from adding cement to the approved mix design in order to attain higher compressive strength.

Chamfer all exposed edges of concrete 3/4" on structure and 1" on substructure, unless otherwise noted.

The exposed surfaces of the concrete shall be finished in accordance with Section 601.11.1-Class 1, Ordinary Surface Finish, except for smooth concrete which shall be finished in accordance with Section 601.11.2-Class 2, Rubbed Finish.

BACKFILL

The Contractor shall backfill around the structure as soon as possible after removal of forms and falsework and slope surfaces to drain in accordance with Section 212.10 of the Standard Specifications.

JOINT FILLER

Preformed joint filler for vertical joints in structure shall be sponge rubber, conforming to Section 708.1. The cost of the filler shall be included in Item 618004-001, Wingwall For Concrete Culvert.

REINFORCING STEEL

All reinforcing steel bars shall be deformed billet steel bars in accordance with AASHTO M31, Grade 60.

The clear distance between reinforcing steel and the face of the concrete shall be as follows, unless otherwise shown on the drawings.

Outside of Structure 3" All other locations 2"
Bottom of Footing 3"

All reinforcement shall be lapped as shown on the plans. Embedment dimensions for reinforcing are clear dimensions unless otherwise shown or noted. Bar spacing is given to centerline of bar.

CRUSHED ROCK SLOPE PROTECTION

Slope protection placed in front of wingwalls shall be select embankment with a minimum D50 size of 20" at a minimum depth of 30". Select embankment shall be placed in accordance to Section 207.7.3 of the Standard Specifications. The cost of the select embankment shall be included in Item 211002-000, Rock Borrow Excavation.

PRECAST CONCRETE STRUCTURE

A Precast Concrete Structure with a minimum 24'-0 Clear Span and 11'-0 Rise may be used in place of the structure shown in the plans. The hydraulic opening shall meet or exceed the opening size as shown in the plans and the allowable backwater shall be a maximum of 1.0 feet. If the Contractor chooses the Precast Alternate then he must submit complete design calculations and detailed plans of the proposed Precast Concrete Structure.

The following soil parameters should be used for the design of the Precast Structure and Wingwalls:

Weight of Soil Backfill = 120 pcf
Soil Backfill Friction Angle = 30°

See Special Provision 618 for additional information.

GEOTECHNICAL INFORMATION

Additional geotechnical information is available from the West Virginia Department of Transportation, Division of Highways upon request.

DIVERSION DITCH

The construction of this structure shall utilize a diversion ditch. For location of diversion ditch, see Road Plans.

EXCAVATION

No excavation shall be classified as rock excavation. All excavation shall be paid for as Structure Excavation, Item 212001-000. Rock and shale shall be excavated and paid for under the above classification to the neat lines of footings or concrete subbase only.

ESTIMATE OF QUANTITIES

Item	Alternate	Description	Unit	Total
211002-000		Rock Borrow Excavation	CY.	90
212001-000		Structure Excavation	CY.	1203
601006-001		Class D Concrete	CY.	120
618004-001		Wingwall For Concrete Culvert	EA.	4
639001-001		Construction Layout Stake	LS.	1
618001-001	BC1	Precast Reinforced Concrete Arch-Topped Culvert, BEBOTech	LF.	180
618001-001	BC2	Precast Reinf rced Concrete Arch-Topped Culvert, Conspan	LF.	180
618002-001	BC3	Precast Reinforced Concrete Flat-Topped Culvert, Omega	LF.	180
618002-001	BC4	Precast Reinforced Concrete Flat-Topped Culvert, Showspan	LF.	180
618002-001	BC5	Precast Reinforced Concrete Flat-Topped Culvert, 3-Sided Box	LF.	180
618003-001	BC6	Cast-In-Place Reinforced Concrete Culvert	LF.	180

*ITEM 602001-001 REINFORCING STEEL BARS (LB.) SUMMARY

Location	#4	#5	#6	#7	#8	#9	#10	#11	#14	Total
Structure		25065	8090			15385	38727	288651		375918
Wingwalls		3359	5875	9779						19013
Total		28424	13965	9779		15385	38727	288651		394931

*- For Information Only

REVISION NUMBER	SHEET NUMBER	REVISIONS	DATE	BY

DESIGNED BY ____ CHECKED BY ____ DATE ____
DETAILED BY DAM CHECKED BY AJR DATE 9/04
TRACED BY ____ CHECKED BY ____ DATE ____

WVDOT - DIVISION OF HIGHWAYS
COUNTY ROUTE 5 OVER THORN RUN

NOTES & QUANTITIES

PROJECT NO. X312-H-93.37

NEFF, LONGEST & BEAM & ASSOC.
CONSULTING ENGINEERS
CHARLESTON, W. VA.
INDIANAPOLIS, IND.

DATE	SCALE	CULVERT NO.	DRWG. NO.
	NONE	10426	2 of 9

3781-6298DSM

Public Roads Div.	State Dist. No.	State Project No.	Federal Project No.	Fiscal Year	County	Sheet No.	Total Sheets
W.V.	05	X312 -H- 93.37	APD-0484 (236) C	2006	GRANT	128	389

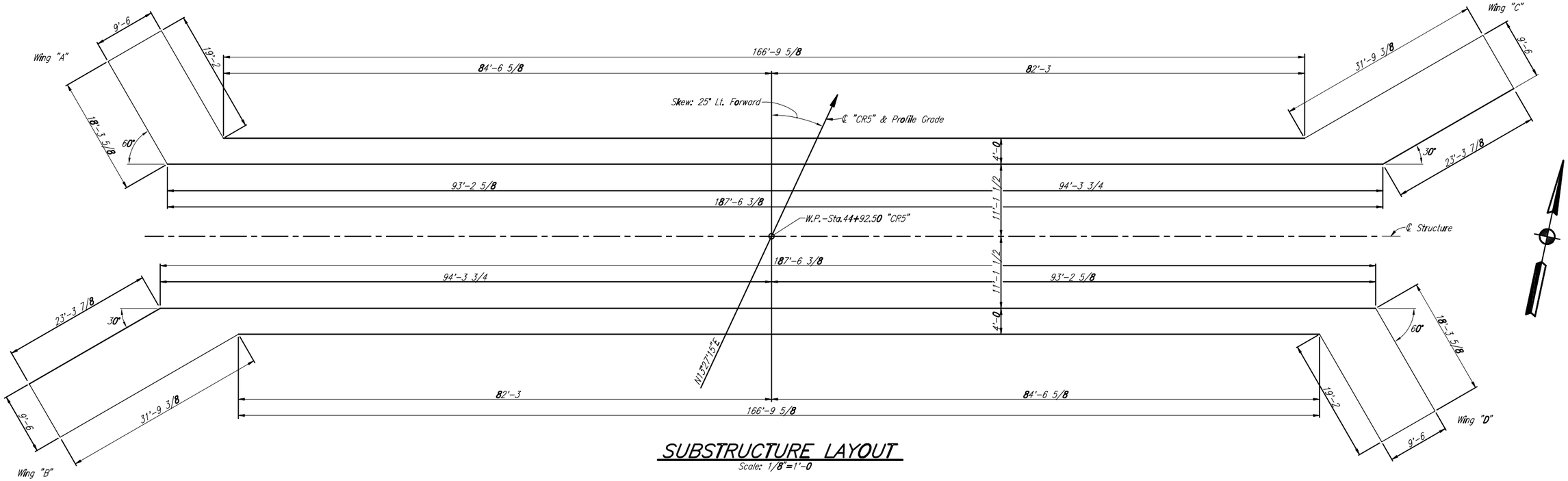

SUBSTRUCTURE LAYOUT

Scale: 1/8"=1'-0

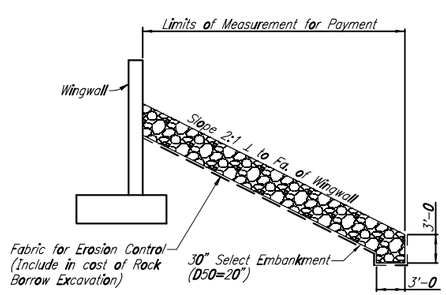

TYPICAL SECTION-FOUNDATION PROTECTION

No Scale

Notes:

This layout is to be used only for the purpose of locating substructure units.

All substructure units are parallel, unless noted.

LEGEND:

W.P. = Working Point

DESCRIPTION	UNIT	QUANTITY
211002-000 Rock Borrow Excavation (D50=20") (Wings "A" & "D")	CY	53
211002-000 Rock Borrow Excavation (D50=20") (Wings "B" & "C")	CY	37

REVISION NUMBER	SHEET NUMBER	REVISIONS	DATE	BY

DESIGNED BY AJR CHECKED BY CMS DATE 9/04
DETAILED BY DAM CHECKED BY AJR DATE 9/04
TRACED BY CHECKED BY DATE

WVDOT – DIVISION OF HIGHWAYS

COUNTY ROUTE 5 OVER THORN RUN

SUBSTRUCTURE LAYOUT

PROJECT NO. X312-H-93.37

NEFF, LONGEST & BEAM & ASSOC. CONSULTING ENGINEERS — CHARLESTON, W. VA. INDIANAPOLIS, IND.

DATE	SCALE	CULVERT NO.	DRWG. NO.
	AS NOTED	10426	3 of 9

3781-629B25M

Public Roads Div.	State Dist. No.	State Project No.	Federal Project No.	Fiscal Year	County	Sheet No.	Total Sheets
W.V.	05	X312 -H- 93.37	APD-0484 (236) C	2006	GRANT	129	389

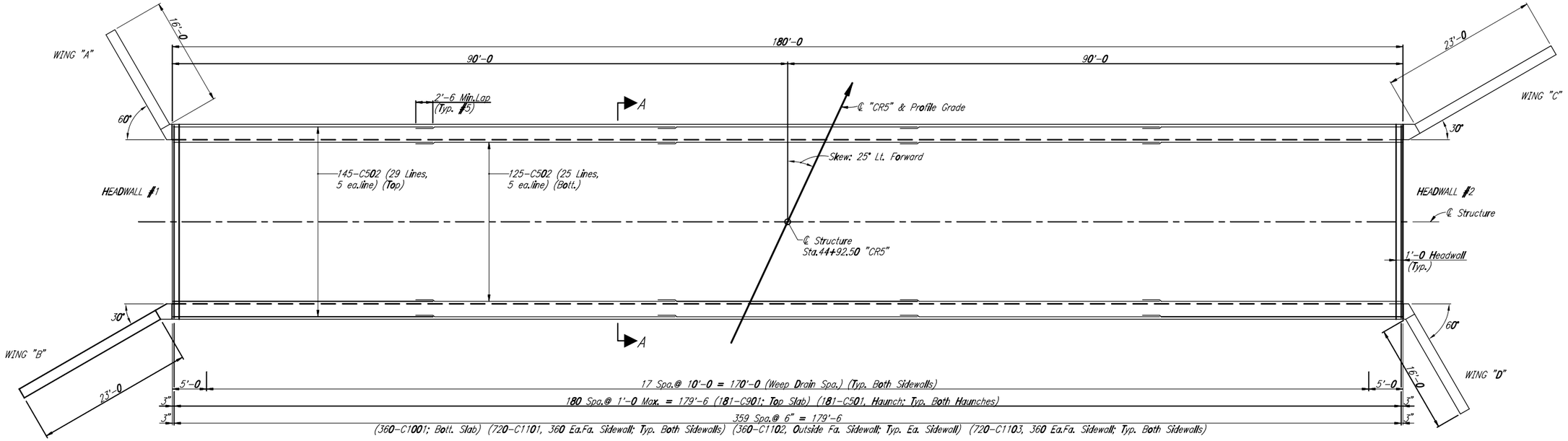

PLAN

Scale: 1/8"=1'-0

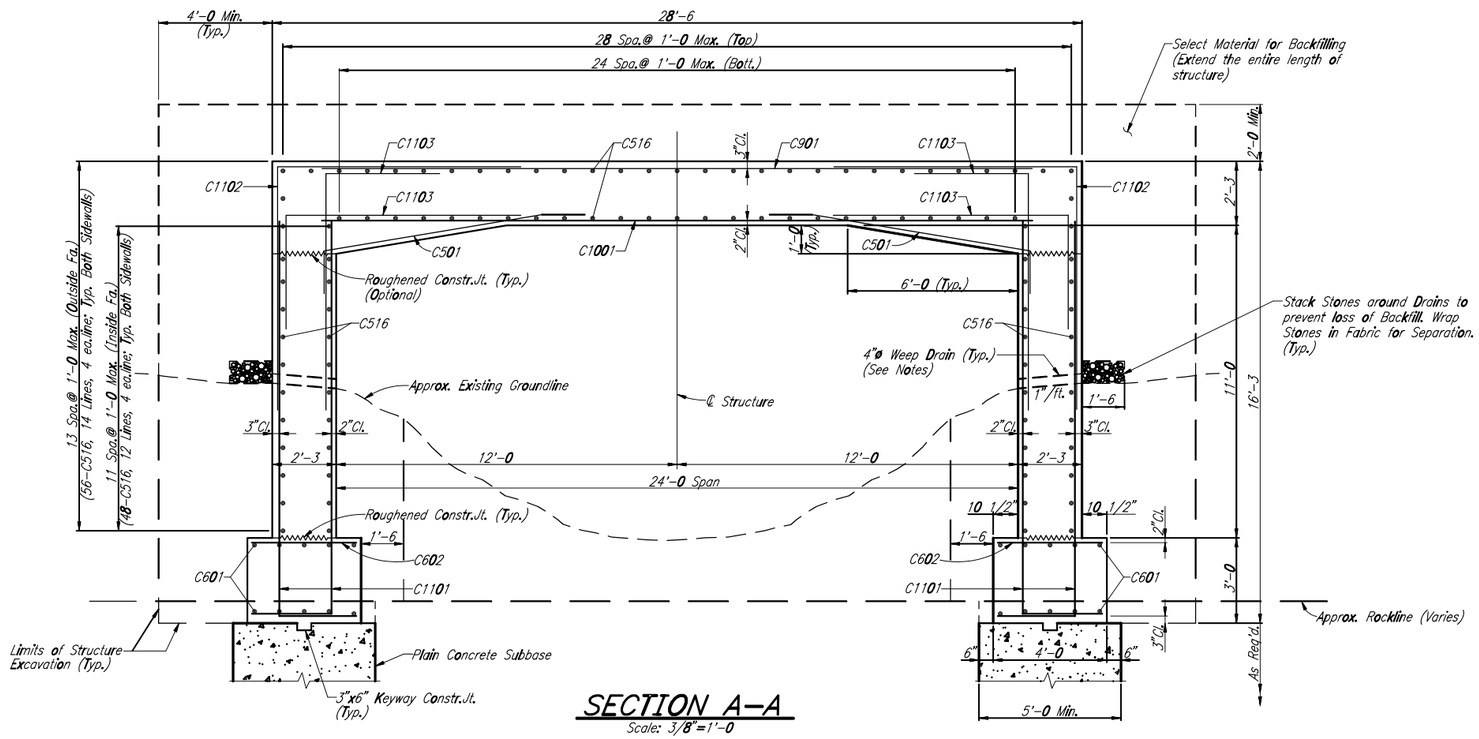

SECTION A-A

Scale: 3/8"=1'-0

LAP TABLE

#5	2'-6
#6	3'-1
#9	6'-0
#10	5'-6
#11	6'-8

Notes:

For Footing Plan & additional details, see Dwgs.5 & 6
For Wingwall Details, see Dwg.6
For bar bending diagrams & Bill of Materials, see Dwg.7
Type "A" Architectural Treatment shall be used on all exposed concrete surfaces.
Plain Concrete Subbase shall be Class "D" Concrete.
Footings and Plain Concrete Subbase combined shall be keyed a minimum of 1'-0 into sound bedrock.
Ultimate Bearing Capacity = 40 ksf (Sound Rock)
Design Bearing Capacity = 30.4 ksf
Weep Drains shall be Fiber Reinforced Plastic Pipe in accordance with Section 714.16. Cost of Weep Drains to be included in unit price of wingwall.
Temporary Shoring/Bracing shall not be placed in the channel. Shoring/Bracing that is required shall be braced off of footing or concrete subbase.
Proposed channel cross section to match existing channel cross section.

REVISION NUMBER	SHEET NUMBER	REVISIONS	DATE	BY

DESIGNED BY AJR CHECKED BY CMS DATE 9/04
DETAILED BY DAM CHECKED BY AJR DATE 9/04
TRACED BY CHECKED BY DATE

WVDOT – DIVISION OF HIGHWAYS
COUNTY ROUTE 5 OVER THORN RUN

STRUCTURE DETAILS

PROJECT NO. X312-H-93.37

NEFF, LONGEST & BEAM & ASSOC. CONSULTING ENGINEERS
CHARLESTON, W. VA. INDIANAPOLIS, IND.

DATE	SCALE	CULVERT NO.	DRWG. NO.
	AS NOTED	10426	4 of 9

3781-629826M

Public Roads Div.	State Dist. No.	State Project No.	Federal Project No.	Fiscal Year	County	Sheet No.	Total Sheets
W.V.	05	X312 -H- 93.37	APD-0484 (236) C	2006	GRANT	130	389

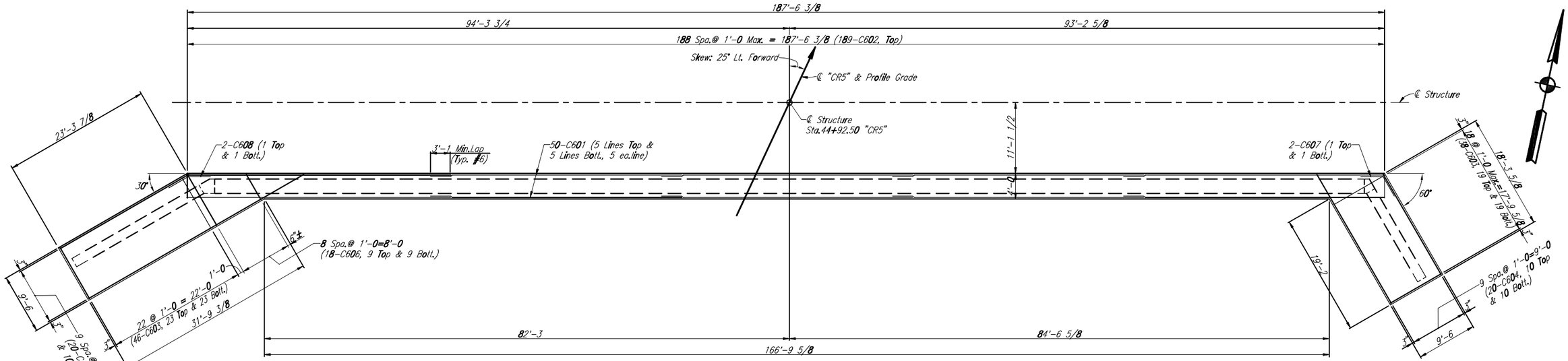

SOUTH FOOTING PLAN

(North Footing same by 180° Rotation)

Scale: 1/8"=1'-0

NEOPRENE SHEETING NOTES:

Install a 3'-2 wide strip, 1/8" thick, general purpose, heavy duty neoprene sheet with nylon fabric reinforcement at locations shown in the plans. Secure the 3'-2 wide neoprene 1/8" sheeting to the concrete with 1 1/4"x1/8" (Length x Shank Diameter) stainless steel button head spikes through a 1" outside diameter 1/8" stainless steel washer. Maximum fastener spacing is 9". Other similar stainless steel devices which will not damage either the neoprene or the concrete may be used subject to the approval of the Engineer.

Center the neoprene strips on all joints. No laps are acceptable in vertically installed neoprene strips.

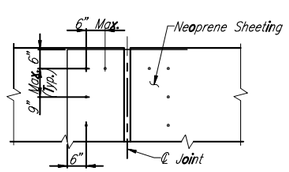

DESCRIPTION OF TEST	ASTM METHOD	REQUIREMENT
Thickness	D 751	0.10 ± 0.01"
Breaking Strength, Grab WXF, Lbs. Min.	D 751	700 x 700
Adhesive 1" Strip, 2" Min., Lbs. Min.	D 751	6
Burst Strength (Mullen) KSI Min.	D 751	1.40
Heat Aging 70 Hours, T 212 F, 180 Bend without Cracking	D 2136	No Cracking of Coating
Low Temperature Brittleness 1 Hour at -40° F, Bend around 1/4" Mandrel	D 2136	No Cracking of Coating

Payment for labor, materials and installation of these items shall be included in Item No.618001-001, 618002-001, 618003-001 or 618004-001.

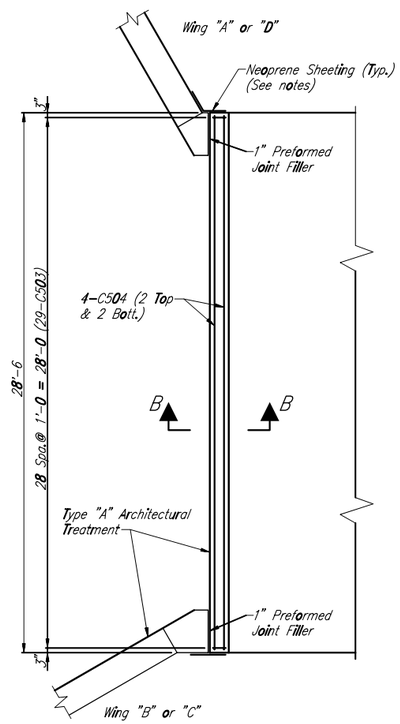

HEADWALL #1

(Headwall #2 same by 180° Rotation

Scale: 1/4"=1'-0

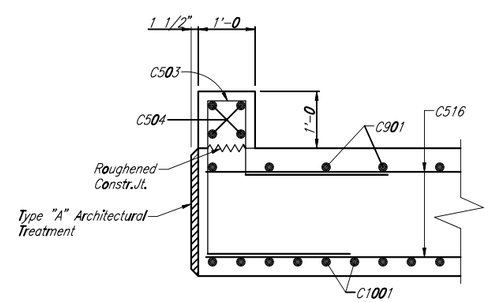

SECTION B-B

Scale: 3/4"=1'-0

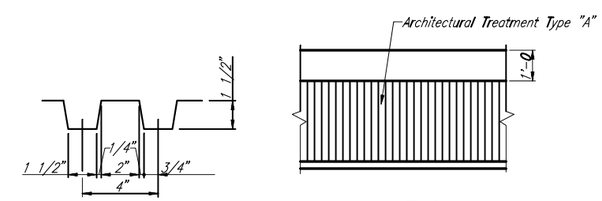

ELEVATION

TYPE "A" ARCHITECTURAL TREATMENT

No Scale

Notes:

For additional details, see Dwgs.4 & 6
For Wingwall Details, see Dwg.6
For bar bending diagrams & Bill of Materials, see Dwg.7
Type "A" Architectural Treatment shall be used on all exposed concrete surfaces.
Ultimate Bearing Capacity = 40 ksf (Sound Rock)
Design Bearing Capacity = 30.4 ksf

REVISION NUMBER	SHEET NUMBER	REVISIONS	DATE	BY

DESIGNED BY AJR CHECKED BY CMS DATE 9/04
DETAILED BY DAM CHECKED BY AJR DATE 9/04
TRACED BY CHECKED BY DATE

WVDOT – DIVISION OF HIGHWAYS
COUNTY ROUTE 5 OVER THORN RUN

STRUCTURE DETAILS

PROJECT NO. X312-H-93.37

NEFF, LONGEST & BEAM & ASSOC. CONSULTING ENGINEERS
CHARLESTON, W. VA. INDIANAPOLIS, IND.

DATE	SCALE	CULVERT NO.	DRWG. NO.
	AS NOTED	10426	5 of 9

3781-629827M

Public Roads Div.	State Dist. No.	State Project No.	Federal Project No.	Fiscal Year	County	Sheet No.	Total Sheets
W.V.	05	X312 -H- 93.37	APD-0484 (236) C	2006	GRANT	131	389

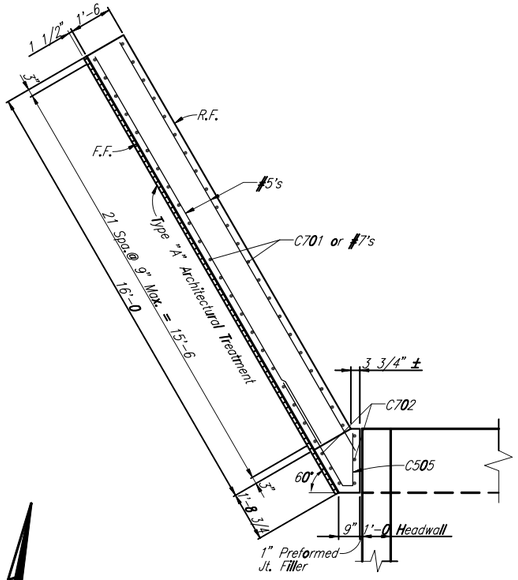

PLAN – WING "A"

(Wing "D" same by 180° Rotation)

Scale: 3/8"=1'-0

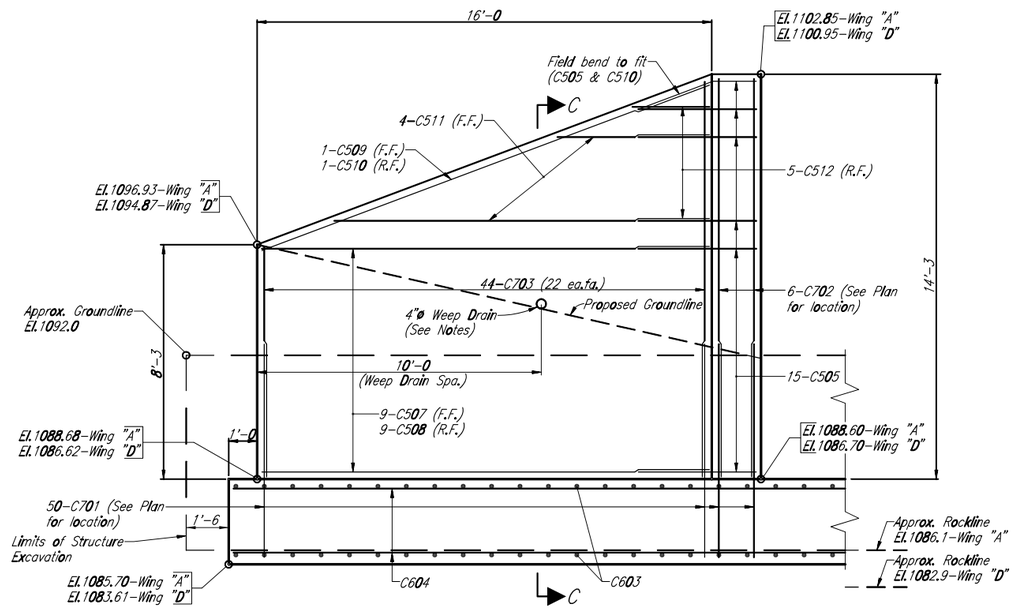

ELEVATION – WING "A"

(Wing "D" same by 180° Rotation)

Scale: 3/8"=1'-0

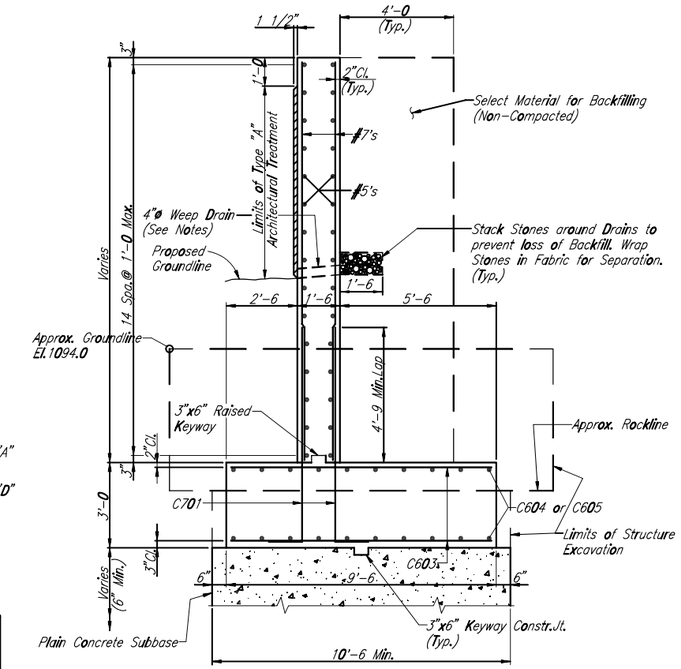

SECTION C–C

Scale: 3/8"=1'-0

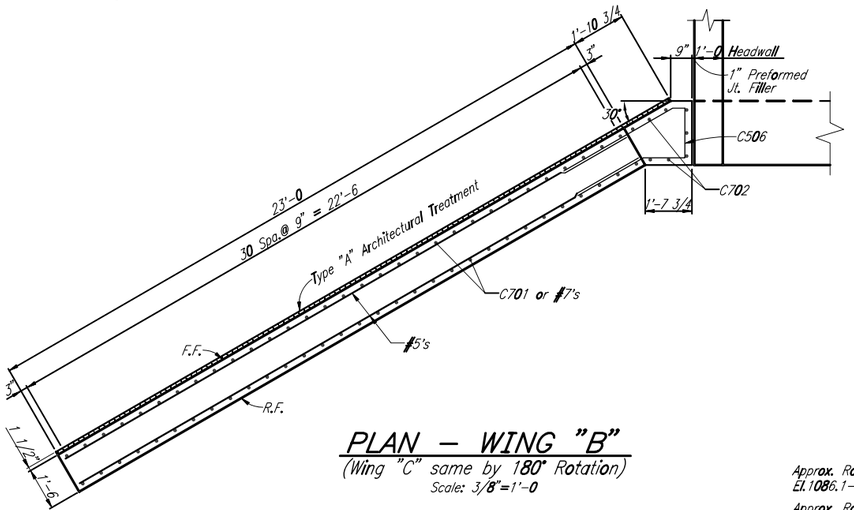

PLAN – WING "B"

(Wing "C" same by 180° Rotation)

Scale: 3/8"=1'-0

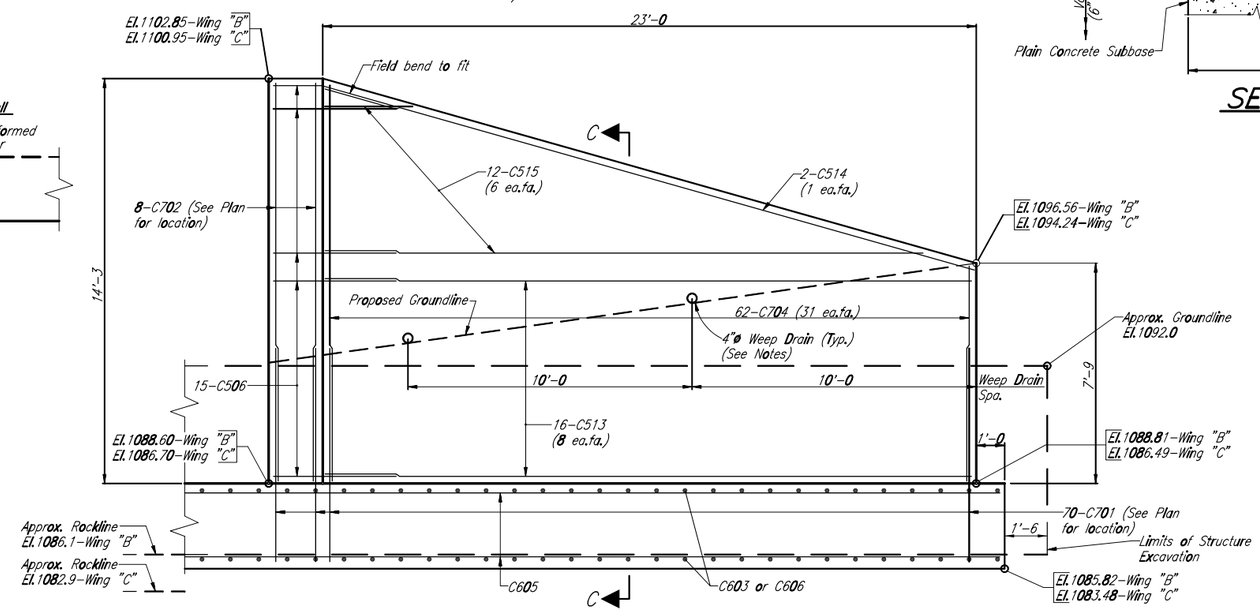

ELEVATION – WING "B"

(Wing "C" same by 180° Rotation)

Scale: 3/8"=1'-0

Notes:

For Footing Plan & additional details, see Dwg.5
For additional details, see Dwg.4
For bar bending diagrams & Bill of Materials, see Dwg.7
Type "A" Architectural Treatment shall be used on all exposed concrete surfaces.
Plain Concrete Subbase shall be Class "D" Concrete.
Footings and Plain Concrete Subbase combined shall be keyed a minimum of 1'-0 into sound bedrock.
Ultimate Bearing Capacity = 40 ksf (Sound Rock)
Design Bearing Capacity = 6.0 ksf (Wingwalls)
Weep Drains shall be Fiber Reinforced Plastic Pipe in accordance with Section 714.16. Cost of Weep Drains to be included in unit price of wingwall.
Wingwall footings to match slope of structure footing.

REVISION NUMBER	SHEET NUMBER	REVISIONS	DATE	BY

DESIGNED BY AJR CHECKED BY CMS DATE 9/04
DETAILED BY DAM CHECKED BY AJR DATE 9/04
TRACED BY CHECKED BY DATE

WVDOT – DIVISION OF HIGHWAYS

COUNTY ROUTE 5 OVER THORN RUN

STRUCTURE DETAILS

PROJECT NO. X312–H–93.37

NEFF, LONGEST & BEAM & ASSOC. CONSULTING ENGINEERS — CHARLESTON, W. VA. INDIANAPOLIS, IND.

DATE	SCALE	CULVERT NO.	DRWG. NO.
	AS NOTED	10426	6 of 9

3781-62982BM

Public Roads Div.	State Dist. No.	State Project No.	Federal Project No.	Fiscal Year	County	Sheet No.	Total Sheets
W.V.	05	X312 -H- 93.37	APD-0484 (236) C	2006	GRANT	132	389

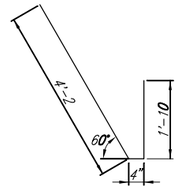

TYPE 9

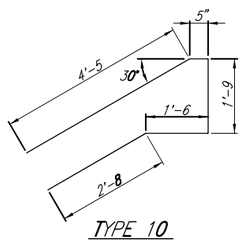

TYPE 10

CUTTING INCREMENTS

1. 6 7/8" Cutting Increment (4 Sets, 10 Ea.Set)
2. 1'-8 3/4 Cutting Increment (4 Sets, 10 Ea.Set)
3. 7" Cutting Increment (4 Sets, 9 Ea.Set)
4. 2'-7 3/8 ± Cutting Increment (2 Sets, 4 Ea.Set)
5. 2'-7 1/2 Cutting Increment (2 Sets, 5 Ea.Set)
6. 3 3/8" Cutting Increment (4 Sets, 22 Ea.Set)
7. 3'-7 1/4 ± Cutting Increment (4 Sets, 6 Ea.Set)
8. 2 1/2" ± Cutting Increment (4 Sets, 31 Ea.Set)

STRUCTURE REINFORCING BAR BILL

MARK	TYPE	SIZE	NO.	LENGTH
C501	1	#5	362	10'-9
C502	Str.	#5	530	38'-0
C601	Str.	#6	100	40'-0
C602	Str.	#6	378	3'-8
C901	Str.	#9	181	25'-0
C1001	Str.	#10	360	25'-0
C1101	2	#11	1440	16'-9
C1102	3	#11	720	17'-0
C1103	4	#11	1440	12'-6

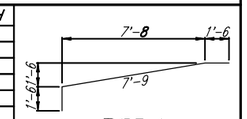

TYPE 1

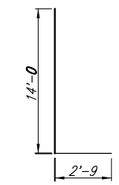

TYPE 2

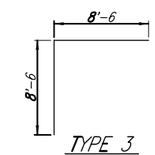

TYPE 3

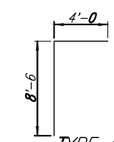

TYPE 4

QUANTITIES

ITEM NO.	ITEM	UNIT	QUANTITY
*	SELECT MATERIAL FOR BACKFILL	CY.	1337
*	CLASS B CONCRETE	CY.	167
*	CLASS K CONCRETE	CY.	799
*	REINFORCING STEEL BAR	LB.	375918
212001-000	STRUCTURE EXCAVATION	CY.	900
601006-001	CLASS D CONCRETE	CY.	80
618001-001	PRECAST REINFORCED CONCRETE ARCH-TOPPED CULVERT	LF.	180
618002-001	PRECAST REINFORCED CONCRETE FLAT-TOPPED CULVERT	LF.	180
618003-001	CAST-IN-PLACE REINFORCED CONCRETE CULVERT	LF.	180

WINGWALLS REINFORCING BAR BILL

	MARK	TYPE	SIZE	NO.	LENGTH
	C503	7	#5	58	9'-8
	C504	Str.	#5	8	28'-2
	C505	9	#5	30	6'-4
	C506	10	#5	30	10'-9
	C507	Str.	#5	18	15'-9
	C508	Str.	#5	18	16'-6
	C509	Str.	#5	2	16'-9
	C510	Str.	#5	2	17'-6
4	C511	Str.	#5	8	5'-5 to 13'-3
5	C512	Str.	#5	10	3'-6 to 14'-0
	C513	Str.	#5	32	22'-9
	C514	Str.	#5	4	23'-9
7	C515	Str.	#5	24	3'-0 to 21'-0
	C603	Str.	#6	168	9'-2
1	C604	Str.	#6	40	18'-1 to 23'-3
2	C605	Str.	#6	40	23'-3 to 38'-10
3	C606	Str.	#6	36	4'-6 to 9'-2
	C607	5	#6	4	7'-0
	C608	6	#6	4	7'-0
	C701	8	#7	240	8'-9
	C702	Str.	#7	28	14'-0
6	C703	Str.	#7	88	8'-0 to 13'-11
8	C704	Str.	#7	124	7'-6 to 13'-11

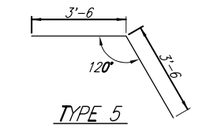

TYPE 5

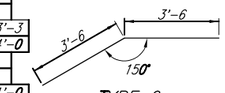

TYPE 6

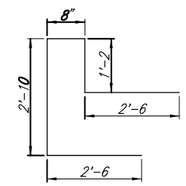

TYPE 7

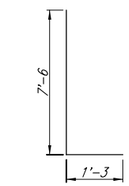

TYPE 8

QUANTITIES

ITEM NO.	ITEM	UNIT	QUANTITY
*	SELECT MATERIAL FOR BACKFILL	CY.	129
*	CLASS B CONCRETE	CY.	89
*	CLASS K CONCRETE	CY.	60
*	REINFORCING STEEL BAR	LB.	19013
212001-000	STRUCTURE EXCAVATION	CY.	303
601006-001	CLASS D CONCRETE	CY.	40
618004-001	WINGWALL FOR CONCRETE CULVERT	EA.	4

*Indicates For Information Only, actual quantity incidental to Item No. 618001-001, 618002-001, 618003-001 or 618004-001. (As directed by WVDOT Special Provision 618)

REVISION NUMBER	SHEET NUMBER	REVISIONS	DATE	BY

DESIGNED BY AJR CHECKED BY CMS DATE 9/04
DETAILED BY DAM CHECKED BY AJR DATE 9/04
TRACED BY CHECKED BY DATE

WVDOT – DIVISION OF HIGHWAYS
COUNTY ROUTE 5 OVER THORN RUN

STRUCTURE DETAILS

PROJECT NO. X312-H-93.37

NEFF, LONGEST & BEAM & ASSOC. CONSULTING ENGINEERS
CHARLESTON, W. VA. INDIANAPOLIS, IND.

DATE	SCALE	CULVERT NO.	DRWG. NO.
	AS NOTED	10426	7 of 9

Public Roads Div.	State Dist. No.	State Project No.	Federal Project No.	Fiscal Year	County	Sheet No.	Total Sheets
W.V.	05	X312 -H- 93.37	APD-0484 (236)C	2006	GRANT	133	389

VICINITY MAP

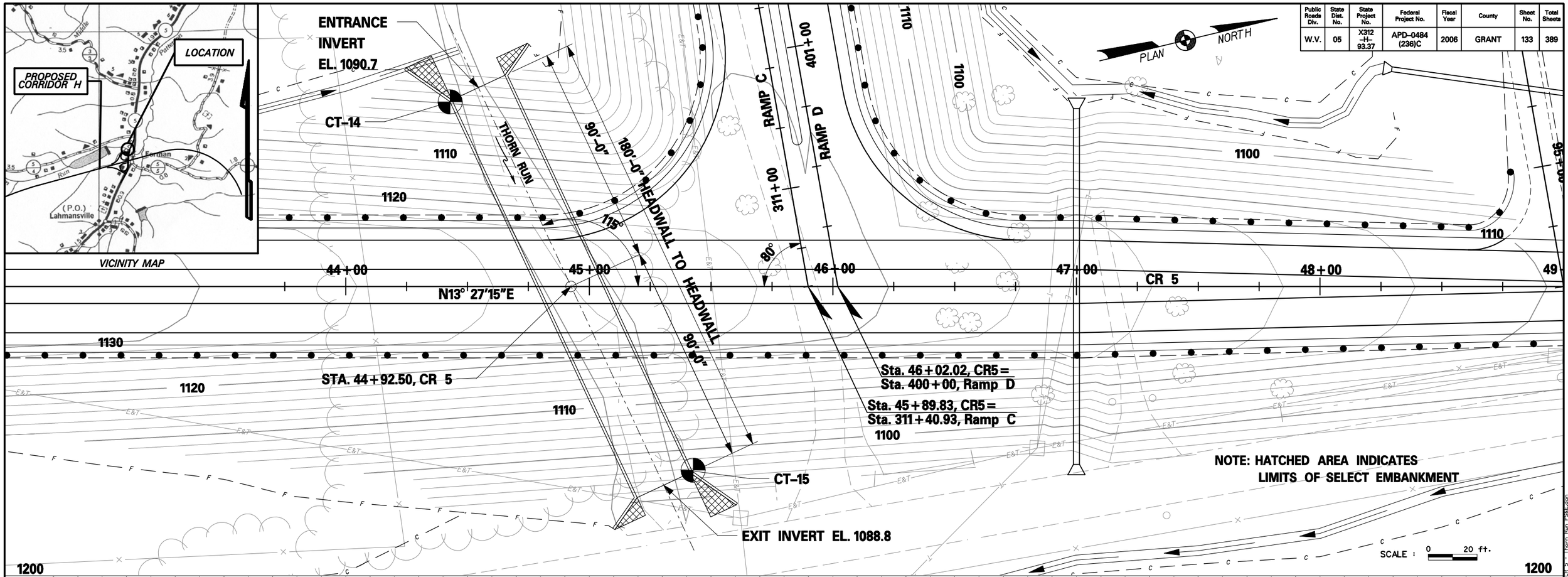

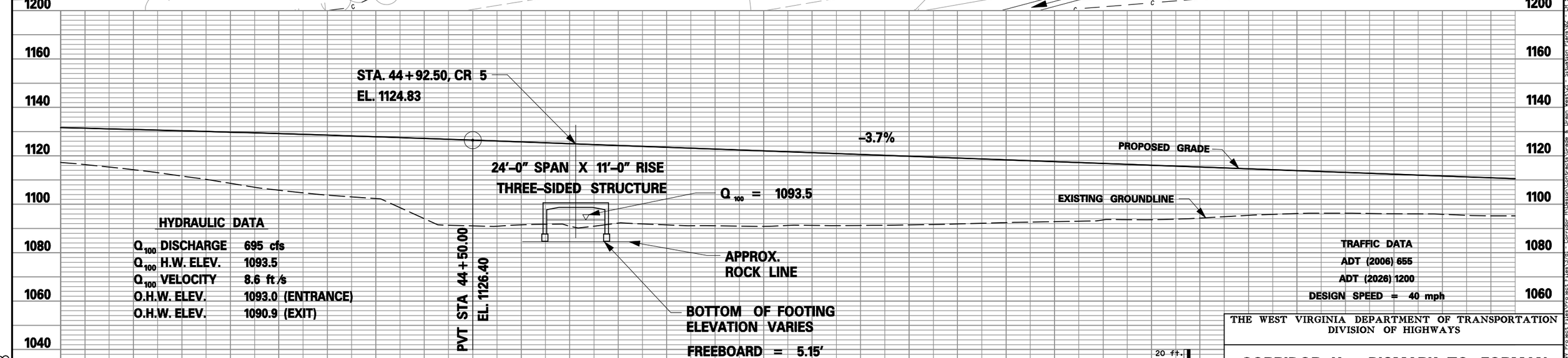

HYDRAULIC DATA

Q_{100} DISCHARGE	695 cfs	
Q_{100} H.W. ELEV.	1093.5	
Q_{100} VELOCITY	8.6 ft/s	
O.H.W. ELEV.	1093.0	(ENTRANCE)
O.H.W. ELEV.	1090.9	(EXIT)

TRAFFIC DATA

ADT (2006) 655

ADT (2026) 1200

DESIGN SPEED = 40 mph

THE WEST VIRGINIA DEPARTMENT OF TRANSPORTATION
DIVISION OF HIGHWAYS

CORRIDOR H – BISMARK TO FORMAN
CR5 OVER THORN RUN
DWG NO. 8 OF 9

BRIDGE #10426

NEFF, LONGEST, & BEAM and ASSOC., LLC
300 Capitol Street, 511 Kanawha Valley Building
Charleston, WV 25301

3/17/2008

THORNSB02

Public Roads Div.	State Dist. No.	State Project No.	Federal Project No.	Fiscal Year	County	Sheet No.	Total Sheets
W.V.	05	X312 -H- 93.37	APD-0484 (236) C	2006	GRANT	134	389

BORING CT-14
STA.44+40
80' Lt.
ELEV.1090.9

1085 DATUM

	ELEVATION	SAMPLES	BLOWS FOR LAST 12" OR % ROCK RECOVERY	RQD
Brown SILTY TO SANDY CLAY with rock fragments, moist, medium stiff	1090.9 / 1086.1		50/0"	
Dark gray SILTY SHALE, broken, medium hard	1076.1		97%	72

Bottom of Test Boring @ 14.8 ft.
Approx. Bottom of Footing El.1088.6

BORING CT-15
STA.45+30
85' Rt.
ELEV.1089.4

	ELEVATION	SAMPLES	BLOWS FOR LAST 12" OR % ROCK RECOVERY	RQD
Brown SILTY TO SANDY CLAY with rock fragments, wet, very stiff	1089.4 / 1083.9		50/5"	
Dark gray SILTY SHALE, medium hard -weathered, soft to medium hard (5.5-6.4 ft.) -broken (12.5-12.8 ft.)	1073.0		90%	30

Bottom of Test Boring @ 16.4 ft.
Approx. Bottom of Footing El.1083.7

▼ Blow counts taken from Standard Penetration Tests.
▼ Indicates ground water after 24 hrs.

REVISION NUMBER	SHEET NUMBER	REVISIONS	DATE	BY

DESIGNED BY ____ CHECKED BY ____ DATE ____
DETAILED BY JRT CHECKED BY AJR DATE 9/04
TRACED BY ____ CHECKED BY ____ DATE ____

WVDOT – DIVISION OF HIGHWAYS
COUNTY ROUTE 5 OVER THORN RUN

SOIL BORINGS

PROJECT NO. X312-H-93.37

NEFF, LONGEST & BEAM & ASSOC.
CONSULTING ENGINEERS
CHARLESTON, W. VA.
INDIANAPOLIS, IND.

DATE	SCALE	CULVERT NO.	DRWG. NO.
	1"=5'	10426	9 of 9

3781-637820M

Public Roads Div.	State Dist. No.	State Project No.	Federal Project No.	Fiscal Year	County	Sheet No.	Total Sheets
W.V.	05	X312 -H- 93.37	APD-0484 (236) C	2006	GRANT	135	389

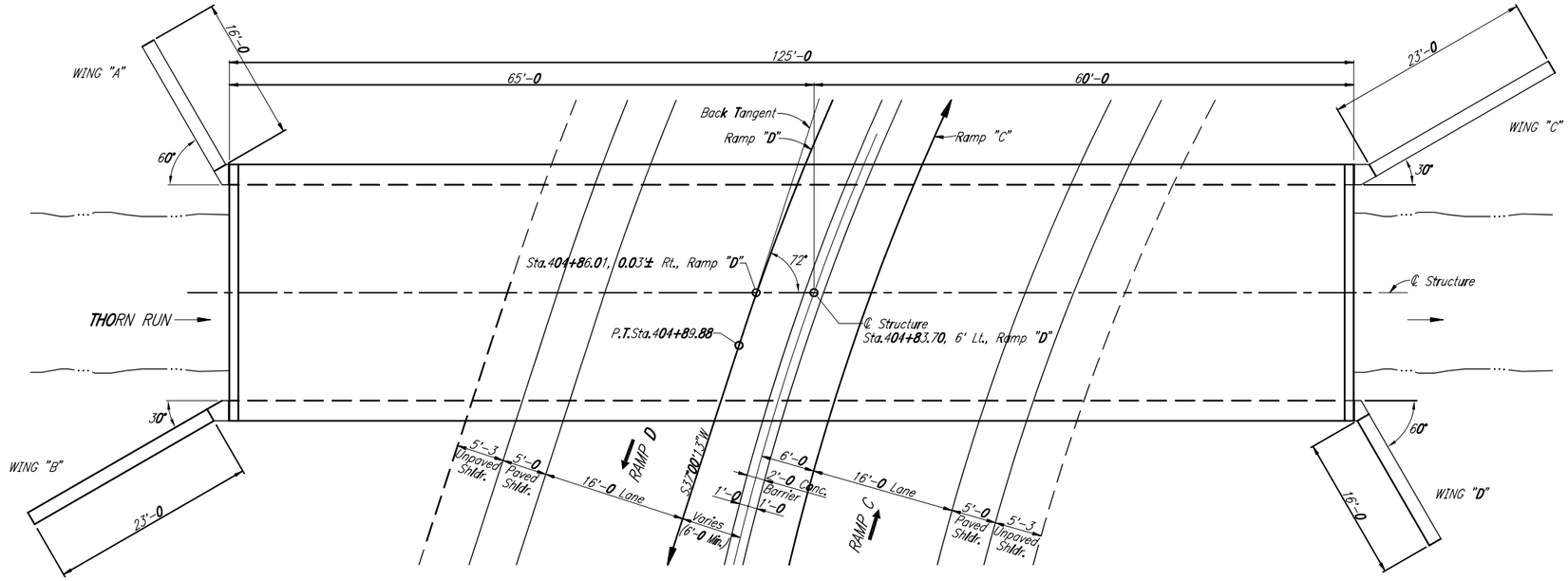

PLAN

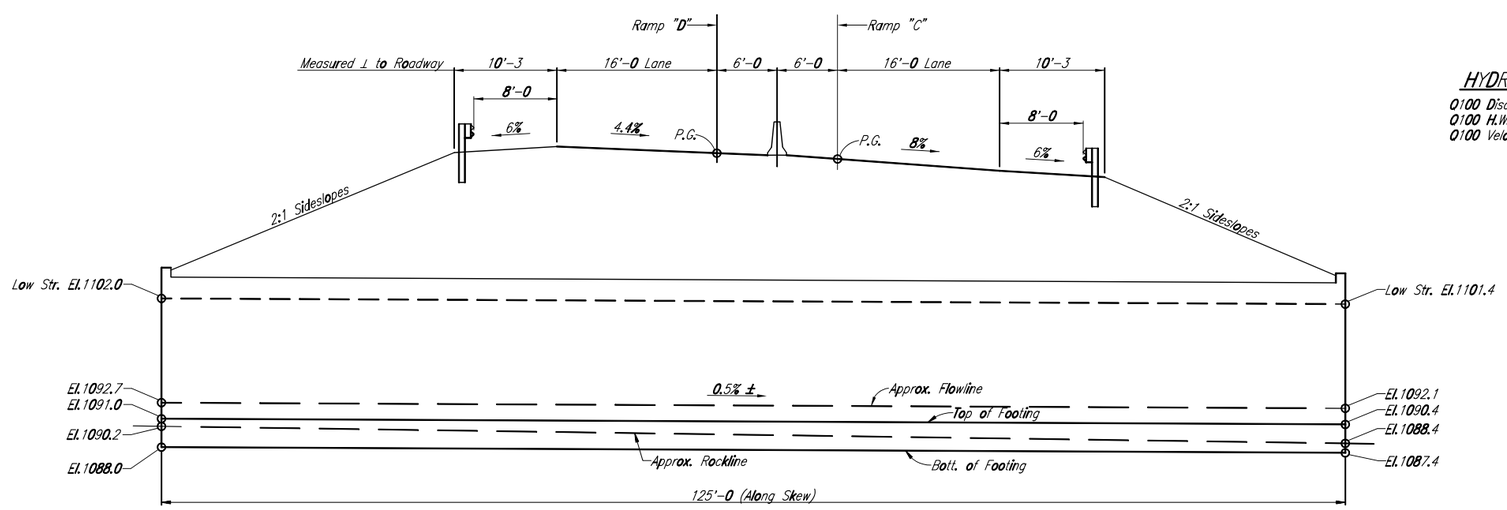

ELEVATION

HYDRAULIC DATA

0100 Discharge	695 cfs
0100 H.W. Elev.	1096.4
0100 Velocity	7.4 ft/s

+0.50% +1.50%

P.V.I. STA.306+00 "RAMP C"
ELEV.=1113.14
V.C.L.=100'

-1.15% +5.06%

P.V.I. STA.407+00 "RAMP D"
ELEV.=1112.69
V.C.L.=400'

VERTICAL CURVE DATA

INDEX OF SHEETS

DWG. NO.	DESCRIPTION
1	General Plan & Index of Sheets
2	Notes & Quantities
3	Substructure Layout
4-7	Structure Details
8	Situation Plan
9	Soil Borings

REVISION NUMBER	SHEET NUMBER	REVISIONS	DATE	BY

DESIGNED BY AJR CHECKED BY CMS DATE 9/04
DETAILED BY DAM CHECKED BY AJR DATE 9/04
TRACED BY CHECKED BY DATE

WVDOT – DIVISION OF HIGHWAYS
RAMPS C & D OVER THORN RUN

GENERAL PLAN

PROJECT NO. X312-H-93.37

NEFF, LONGEST & BEAM & ASSOC.
CONSULTING ENGINEERS
CHARLESTON, W. VA.
INDIANAPOLIS, IND.

DATE	SCALE	CULVERT NO.	DRWG. NO.
	1/8"=1'-0	10461	1 of 9

37181-637902M

Public Roads Div.	State Dist. No.	State Project No.	Federal Project No.	Fiscal Year	County	Sheet No.	Total Sheets
W.V.	05	X312 -H- 93.37	APD-0484 (236) C	2006	GRANT	136	389

GOVERNING SPECIFICATIONS

The West Virginia Department of Transportation, Division of Highways, Standard Specifications, Roads and Bridges adopted 2000, as amended by the West Virginia Division of Highways, Supplemental Specifications dated January 1, 2003, the contract documents, and the contract plans are the governing provisions applicable to this project.

DESIGN

The structure is designed by the Load and Resistance Factor Design Method in accordance with the AASHTO LRFD Bridge Design Specifications, 2nd Edition, 1998 with the 2003 Interims along with the Three-Sided Reinforced Concrete Culvert Special Provisions.

DESIGN LOADS

Dead Load: Calculated weight of structure including 25 feet of fill (measured from top of structure to profile grade.

Live Load: HL-93.

Earthquake: Seismic Zone 1

Thermal Forces: Temperature Range 0° F to 80° F
Normal Erection Temperature 50° F

DESIGN STRENGTHS

CONCRETE

Class K f'c = 4,000 psi
Class B f'c = 3,000 psi
Class D f'c = 2,000 psi

REINFORCEMENT

AASHTO M31, Grade 60 Fy = 60,000 psi

CONCRETE

All concrete shall be Class B, Class D or Class K, unless otherwise noted.

Concrete in structure and wingwalls to be Class K.

Concrete in footings to be Class B.

Concrete in plain concrete subbase to be Class D. Class D Concrete required only if needed to bear a minimum of 1'-0 into sound bedrock beyond limits of footing. No payment shall be made if Class D Concrete is not used.

Concrete shall be cured in accordance with Section 601.12 of the Standard Specifications. All concrete shall be wet cured not less than 7 days. Burlap shall conform to Section 707.7 of the Standard Specifications.

The Contractor is prohibited from adding cement to the approved mix design in order to attain higher compressive strength.

Chamfer all exposed edges of concrete 3/4" on structure and 1" on substructure, unless otherwise noted.

The exposed surfaces of the concrete shall be finished in accordance with Section 601.11.1-Class 1, Ordinary Surface Finish, except for smooth concrete which shall be finished in accordance with Section 601.11.2-Class 2, Rubbed Finish.

BACKFILL

The Contractor shall backfill around the structure as soon as possible after removal of forms and falsework and slope surfaces to drain in accordance with Section 212.10 of the Standard Specifications.

JOINT FILLER

Preformed joint filler for vertical joints in structure shall be sponge rubber, conforming to Section 708.1. The cost of the filler shall be included in Item 618004-001, Wingwall For Concrete Culvert.

REINFORCING STEEL

All reinforcing steel bars shall be deformed billet steel bars in accordance with AASHTO M31, Grade 60.

The clear distance between reinforcing steel and the face of the concrete shall be as follows, unless otherwise shown on the drawings.

Outside of Structure 3" All other locations 2"
Bottom of Footing 3"

All reinforcement shall be lapped as shown on the plans. Embedment dimensions for reinforcing are clear dimensions unless otherwise shown or noted. Bar spacing is given to centerline of bar.

CRUSHED ROCK SLOPE PROTECTION

Slope protection placed in front of wingwalls shall be select embankment with a minimum D50 size of 20" at a minimum depth of 30". Select embankment shall be placed in accordance to Section 207.7.3 of the Standard Specifications. The cost of the select embankment shall be included in Item 211002-000, Rock Borrow Excavation.

PRECAST CONCRETE STRUCTURE

A Precast Concrete Structure with a minimum 24'-0 Clear Span and 11'-0 Rise may be used in place of the structure shown in the plans. The hydraulic opening shall meet or exceed the opening size as shown in the plans and the allowable backwater shall be a maximum of 1.0 feet. If the Contractor chooses the Precast Alternate then he must submit complete design calculations and detailed plans of the proposed Precast Concrete Structure.

The following soil parameters should be used for the design of the Precast Structure and Wingwalls:

Weight of Soil Backfill = 120 pcf
Soil Backfill Friction Angle = 30°

See Special Provision 618 for additional information.

GEOTECHNICAL INFORMATION

Additional geotechnical information is available from the West Virginia Department of Transportation, Division of Highways upon request.

DIVERSION DITCH

The construction of this structure shall utilize a diversion ditch. For location of diversion ditch, see Road Plans.

EXCAVATION

No excavation shall be classified as rock excavation. All excavation shall be paid for as Structure Excavation, Item 212001-000. Rock and shale shall be excavated and paid for under the above classification to the neat lines of footings or concrete subbase only.

ESTIMATE OF QUANTITIES

Item	Alternate	Description	Unit	Total
211002-000		Rock Borrow Excavation	CY.	90
212001-000		Structure Excavation	CY.	747
601006-001		Class D Concrete	CY.	30
618004-001		Wingwall For Concrete Culvert	EA.	4
639001-001		Construction Layout Stake	LS.	1
618001-001	BD1	Precast Reinforced Concrete Arch-Topped Culvert, BEBOTech	LF.	125
618001-001	BD2	Precast Reinforced Concrete Arch-Topped Culvert, Conspan	LF.	125
618002-001	BD3	Precast Reinforced Concrete Flat-Topped Culvert, Omega	LF.	125
618002-001	BD4	Precast Reinforced Concrete Flat-Topped Culvert, Showspan	LF.	125
618002-001	BD5	Precast Reinforced Concrete Flat-Topped Culvert, 3-Sided Box	LF.	125
618003-001	BD6	Cast-In-Place Reinforced Concrete Culvert	LF.	125

*ITEM 602001-001 REINFORCING STEEL BARS (LB.) SUMMARY

Location	#4	#5	#6	#7	#8	#9	#10	#11	#14	Total
Structure		17455	5742			10710	26894	200453		261254
Wingwalls		3359	5874	9779						19012
Total		20814	11616	9779		10710	26894	200453		280266

*- For Information Only

REVISION NUMBER	SHEET NUMBER	REVISIONS	DATE	BY

DESIGNED BY ____ CHECKED BY ____ DATE ____
DETAILED BY DAM CHECKED BY AJR DATE 9/04
TRACED BY ____ CHECKED BY ____ DATE ____

WVDOT - DIVISION OF HIGHWAYS
RAMPS C & D OVER THORN RUN

NOTES & QUANTITIES

PROJECT NO. X312-H-93.37

NEFF, LONGEST & BEAM & ASSOC.
CONSULTING ENGINEERS
CHARLESTON, W. VA.
INDIANAPOLIS, IND.

DATE	SCALE	CULVERT NO.	DRWG. NO.
	NONE	10461	2 of 9

3781-637BDSM

Public Roads Div.	State Dist. No.	State Project No.	Federal Project No.	Fiscal Year	County	Sheet No.	Total Sheets
W.V.	05	X312 -H- 93.37	APD-0484 (236) C	2006	GRANT	137	389

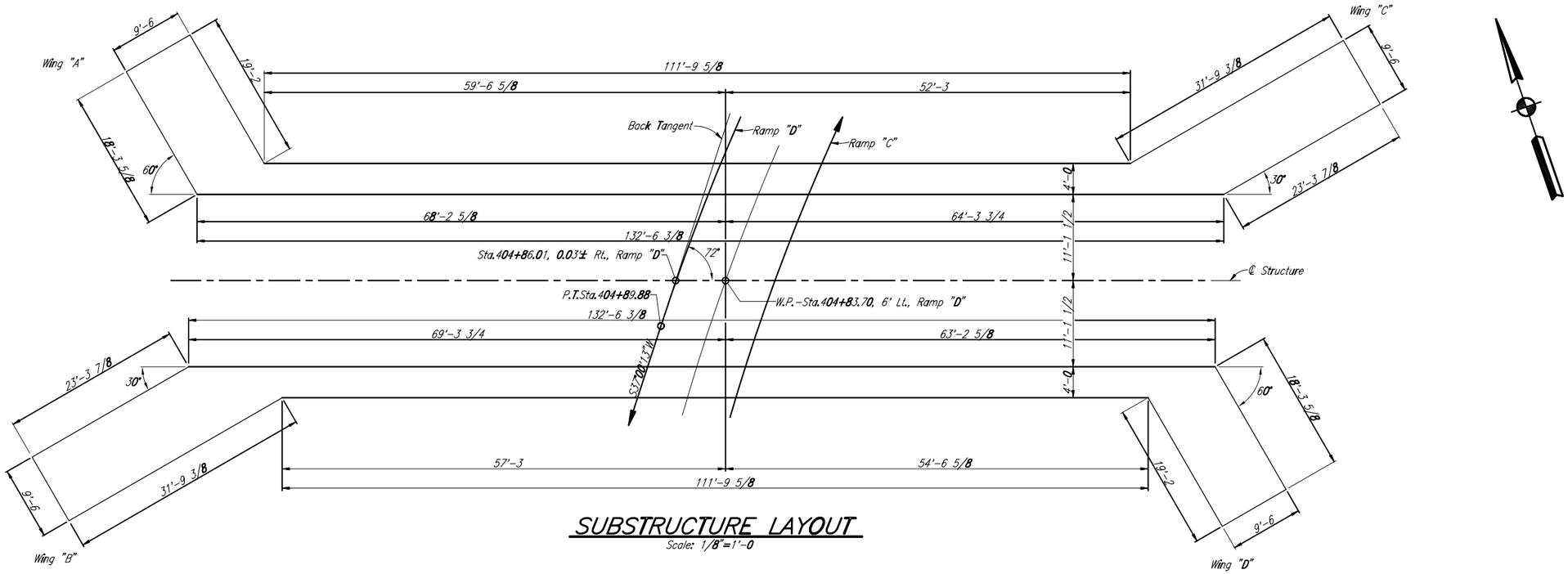

SUBSTRUCTURE LAYOUT

Scale: 1/8"=1'-0

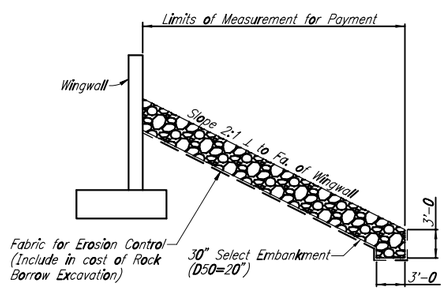

TYPICAL SECTION-FOUNDATION PROTECTION

No Scale

Notes:
This layout is to be used only for the purpose of locating substructure units.
All substructure units are parallel, unless noted.

LEGEND:
W.P. = Working Point

DESCRIPTION	UNIT	QUANTITY
211002-000 Rock Borrow Excavation (D50=20") (Wings "A" & "D")	CY	53
211002-000 Rock Borrow Excavation (D50=20") (Wings "B" & "C")	CY	37

REVISION NUMBER	SHEET NUMBER	REVISIONS	DATE	BY

DESIGNED BY AJR CHECKED BY CMS DATE 9/04
DETAILED BY DAM CHECKED BY AJR DATE 9/04
TRACED BY CHECKED BY DATE

WVDOT – DIVISION OF HIGHWAYS
RAMPS C & D OVER THORN RUN

SUBSTRUCTURE LAYOUT

PROJECT NO. X312-H-93.37

NEFF, LONGEST & BEAM & ASSOC. CONSULTING ENGINEERS
CHARLESTON, W. VA. INDIANAPOLIS, IND.

DATE	SCALE	CULVERT NO.	DRWG. NO.
	AS NOTED	10461	3 of 9

3781-637B25M

Public Roads Div.	State Dist. No.	State Project No.	Federal Project No.	Fiscal Year	County	Sheet No.	Total Sheets
W.V.	05	X312 -H- 93.37	APD-0484 (236) C	2006	GRANT	138	389

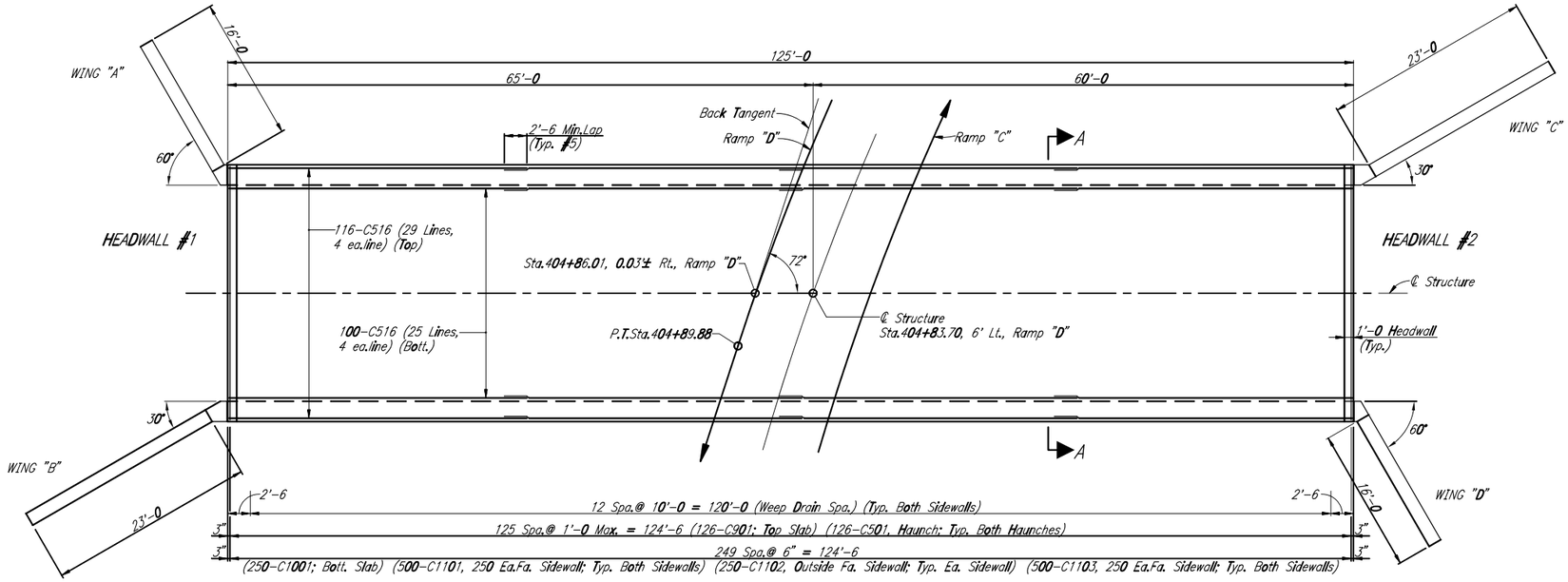

PLAN

Scale: 1/8"=1'-0

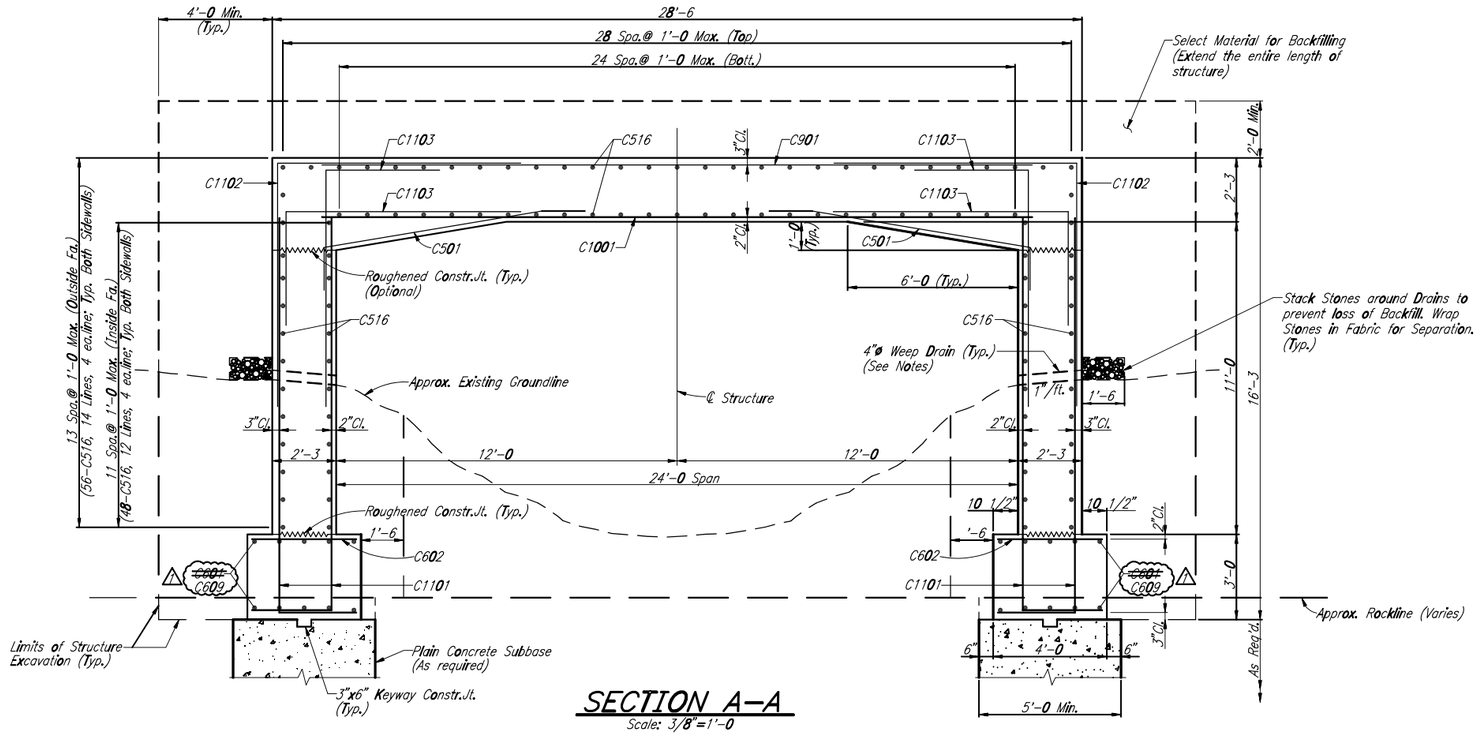

SECTION A-A

Scale: 3/8"=1'-0

LAP TABLE

#5	2'-6
#6	3'-1
#9	6'-0
#10	5'-6
#11	6'-8

Notes:

For Footing Plan & additional details, see Dwgs.5 & 6
For Wingwall Details, see Dwg.6
For bar bending diagrams & Bill of Materials, see Dwg.7
Type "A" Architectural Treatment shall be used on all exposed concrete surfaces.
Footings shall be keyed a minimum of 1'-0 into sound bedrock. A Plain Concrete Subbase (Class "D" Concrete) shall be used as required to key 1'-0 into sound bedrock.
Ultimate Bearing Capacity = 40 ksf (Sound Rock)
Design Bearing Capacity = 30.4 ksf
Weep Drains shall be Fiber Reinforced Plastic Pipe in accordance with Section 714.16. Cost of Weep Drains to be included in unit price of wingwall.
Temporary Shoring/Bracing shall not be placed in the channel. Shoring/Bracing that is required shall be braced off of footing or concrete subbase.
Proposed channel cross section to match existing channel cross section.

REVISION NUMBER	SHEET NUMBER	REVISIONS	DATE	BY
1	138	C601 Bar Callout	11/5/07	AJR

DESIGNED BY AJR CHECKED BY CMS DATE 9/04
DETAILED BY DAM CHECKED BY AJR DATE 9/04
TRACED BY CHECKED BY DATE

WVDOT – DIVISION OF HIGHWAYS
RAMPS C & D OVER THORN RUN

STRUCTURE DETAILS

PROJECT NO. X312-H-93.37

NEFF, LONGEST & BEAM & ASSOC. CONSULTING ENGINEERS
CHARLESTON, W. VA. INDIANAPOLIS, IND.

DATE	SCALE	CULVERT NO.	DRWG. NO.
	AS NOTED	10461	4 of 9

3781-637B26M

Public Roads Div.	State Dist. No.	State Project No.	Federal Project No.	Fiscal Year	County	Sheet No.	Total Sheets
W.V.	05	X312 -H- 93.37	APD-0484 (236) C	2006	GRANT	139	389

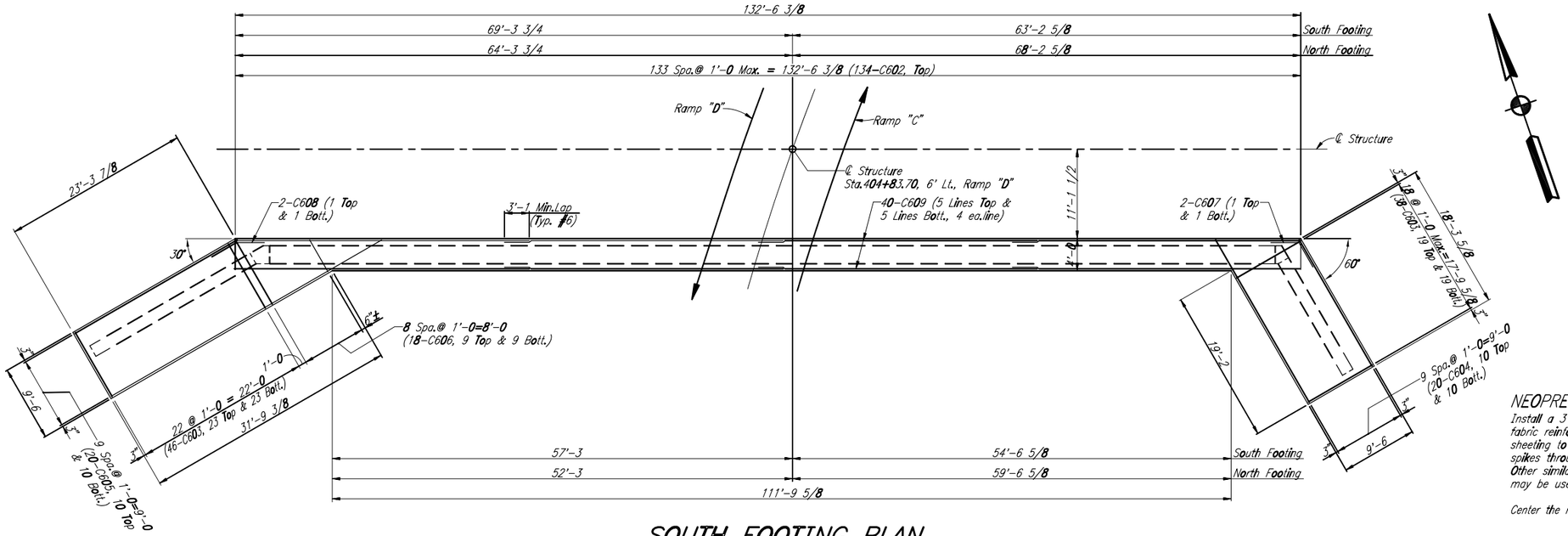

SOUTH FOOTING PLAN

(North Footing same by 180° Rotation)

Scale: 1/8"=1'-0

NEOPRENE SHEETING NOTES:

Install a 3'-2 wide strip, 1/8" thick, general purpose, heavy duty neoprene sheet with nylon fabric reinforcement at locations shown in the plans. Secure the 3'-2 wide neoprene 1/8" sheeting to the concrete with 1 1/4"x1/8" (Length x Shank Diameter) stainless steel button head spikes through a 1" outside diameter 1/8" stainless steel washer. Maximum fastener spacing is 9". Other similar stainless steel devices which will not damage either the neoprene or the concrete may be used subject to the approval of the Engineer.

Center the neoprene strips on all joints. No laps are acceptable in vertically installed neoprene strips.

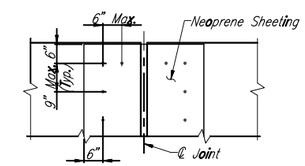

DESCRIPTION OF TEST	ASTM METHOD	REQUIREMENT
Thickness	D 751	0.10 ± 0.01"
Breaking Strength, Grab WXF, Lbs. Min.	D 751	700 x 700
Adhesive 1" Strip, 2" Min., Lbs. Min.	D 751	6
Burst Strength (Mullen) KSI Min.	D 751	1.40
Heat Aging 70 Hours, T 212 F, 180 Bend without Cracking	D 2136	No Cracking of Coating
Low Temperature Brittleness 1 Hour at -40° F, Bend around 1/4" Mandrel	D 2136	No Cracking of Coating

Payment for labor, materials and installation of these items shall be included in Item No.618001-001, 618002-001, 618003-001 or 618004-001.

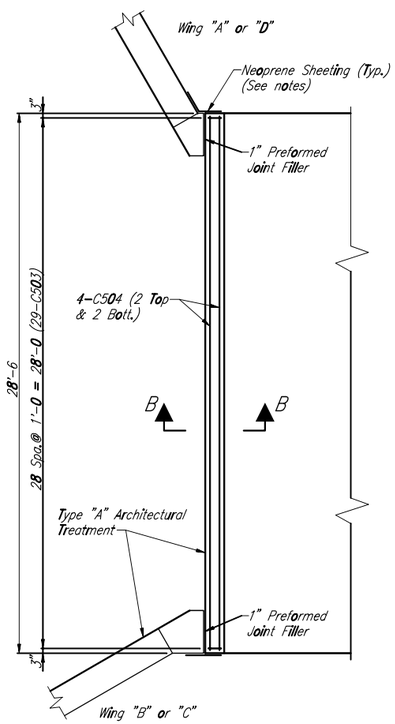

HEADWALL #1

(Headwall #2 same by 180° Rotation

Scale: 1/4"=1'-0

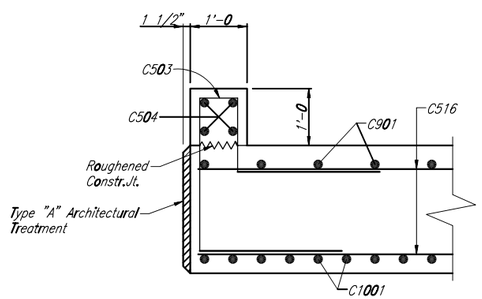

SECTION B-B

Scale: 3/4"=1'-0

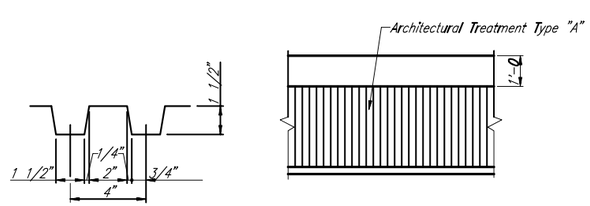

ELEVATION

TYPE "A" ARCHITECTURAL TREATMENT

No Scale

Notes:

For additional details, see Dwgs.4 & 6
For Wingwall Details, see Dwg.6
For bar bending diagrams & Bill of Materials, see Dwg.7
Type "A" Architectural Treatment shall be used on all exposed concrete surfaces.
Ultimate Bearing Capacity = 40 ksf (Sound Rock)
Design Bearing Capacity = 30.4 ksf

REVISION NUMBER	SHEET NUMBER	REVISIONS	DATE	BY

DESIGNED BY AJR CHECKED BY CMS DATE 9/04
DETAILED BY DAM CHECKED BY AJR DATE 9/04
TRACED BY CHECKED BY DATE

WVDOT – DIVISION OF HIGHWAYS

RAMPS C & D OVER THORN RUN

STRUCTURE DETAILS

PROJECT NO. X312-H-93.37

NEFF, LONGEST & BEAM & ASSOC. CONSULTING ENGINEERS — CHARLESTON, W. VA. INDIANAPOLIS, IND.

DATE	SCALE	CULVERT NO.	DRWG. NO.
	AS NOTED	10461	5 of 9

3781-637827M

Public Roads Div.	State Dist. No.	State Project No.	Federal Project No.	Fiscal Year	County	Sheet No.	Total Sheets
W.V.	05	X312 -H- 93.37	APD-0484 (236) C	2006	GRANT	140	389

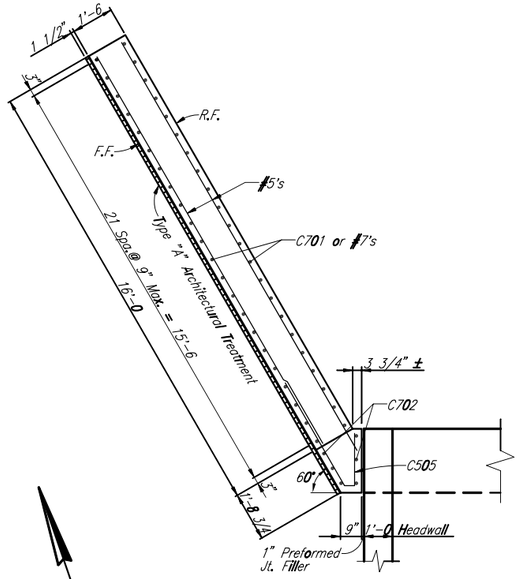

PLAN – WING "A"

(Wing "D" same by 180° Rotation)

Scale: 3/8"=1'-0

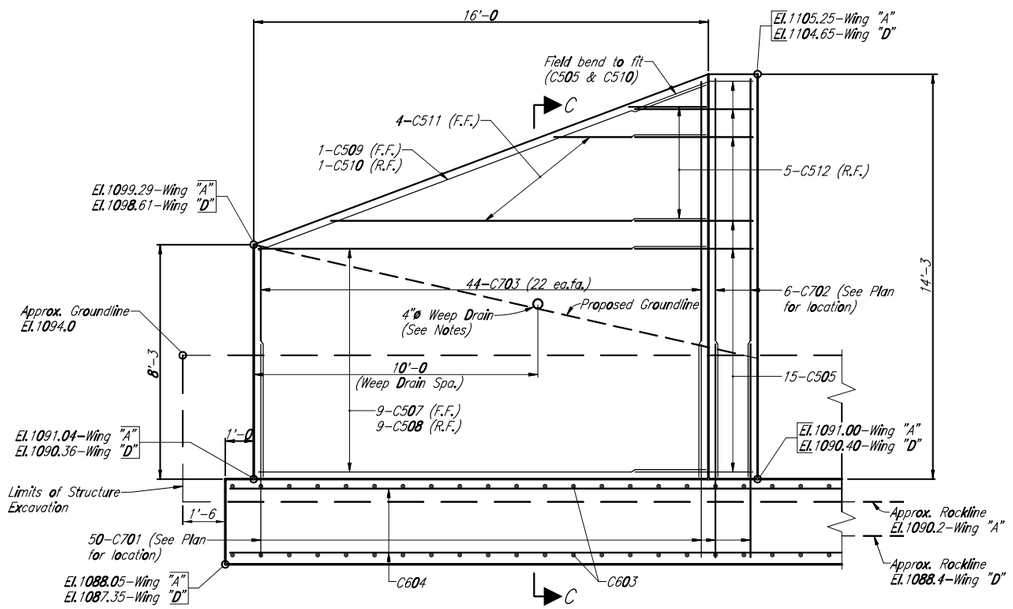

ELEVATION – WING "A"

(Wing "D" same by 180° Rotation)

Scale: 3/8"=1'-0

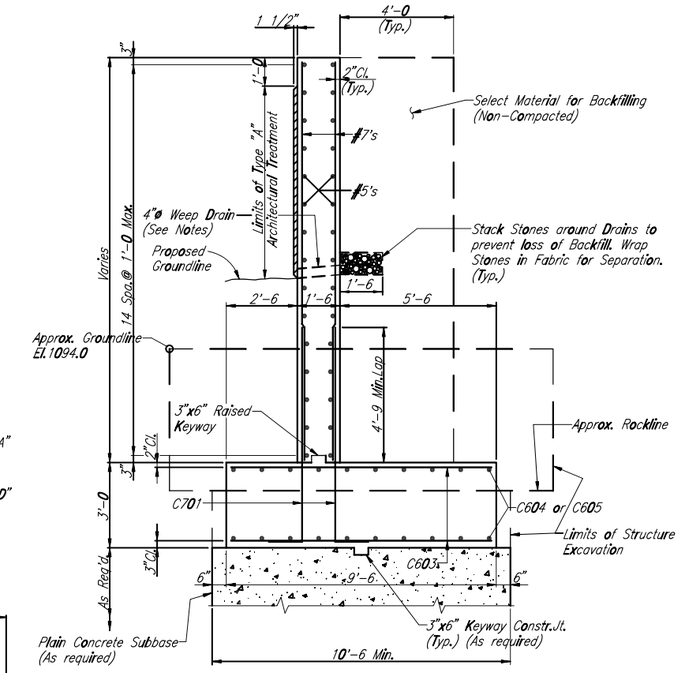

SECTION C–C

Scale: 3/8"=1'-0

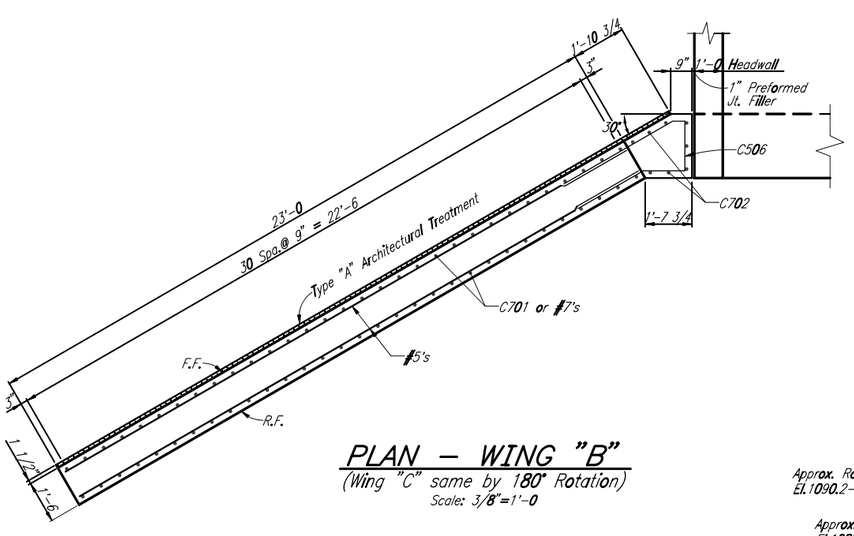

PLAN – WING "B"

(Wing "C" same by 180° Rotation)

Scale: 3/8"=1'-0

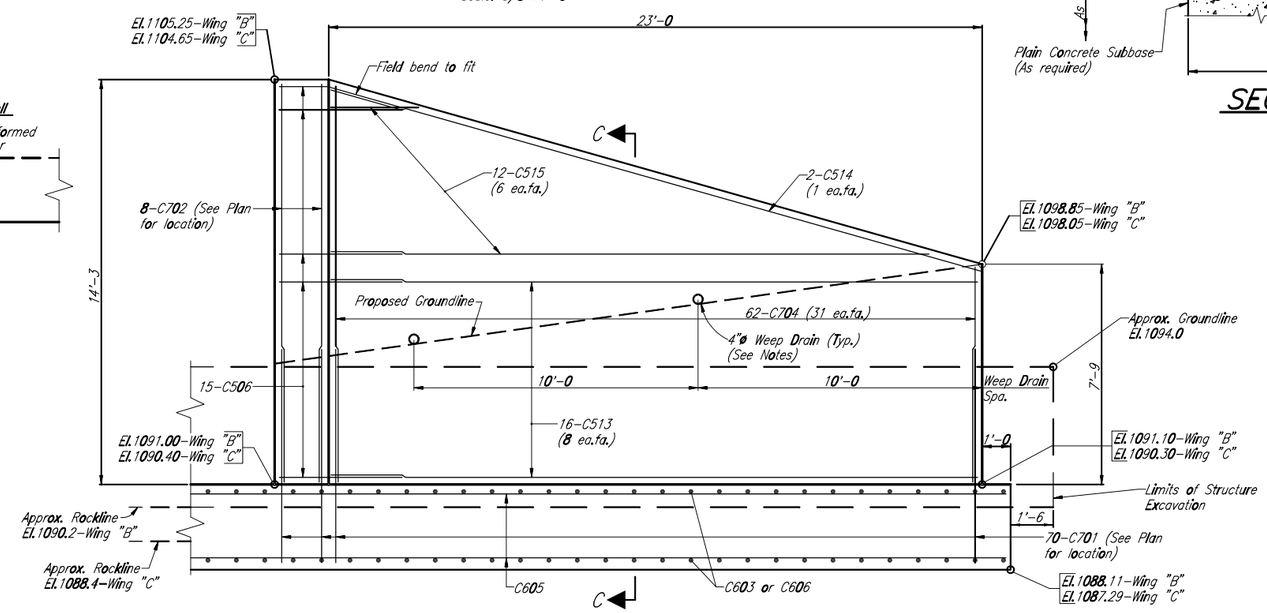

ELEVATION – WING "B"

(Wing "C" same by 180° Rotation)

Scale: 3/8"=1'-0

Notes:

For Footing Plan & additional details, see Dwg.5
For additional details, see Dwg.4
For bar bending diagrams & Bill of Materials, see Dwg.7
Type "A" Architectural Treatment shall be used on all exposed concrete surfaces.
Footings shall be keyed a minimum of 1'-0 into sound bedrock. A Plain Concrete Subbase (Class "D" Concrete) shall be used as required to key 1'-0 into sound bedrock.
Ultimate Bearing Capacity = 40 ksf (Sound Rock)
Design Bearing Capacity = 6.0 ksf (Wingwalls)
Weep Drains shall be Fiber Reinforced Plastic Pipe in accordance with Section 714.16. Cost of Weep Drains to be included in unit price of wingwall.
Wingwall footings to match slope of structure footing.

REVISION NUMBER	SHEET NUMBER	REVISIONS	DATE	BY

DESIGNED BY AJR CHECKED BY CMS DATE 9/04
DETAILED BY DAM CHECKED BY AJR DATE 9/04
TRACED BY CHECKED BY DATE

WVDOT – DIVISION OF HIGHWAYS

RAMPS C & D OVER THORN RUN

STRUCTURE DETAILS

PROJECT NO. X312-H-93.37

NEFF, LONGEST & BEAM & ASSOC. CONSULTING ENGINEERS — CHARLESTON, W. VA. INDIANAPOLIS, IND.

DATE	SCALE	CULVERT NO.	DRWG. NO.
	AS NOTED	10461	6 of 9

3781-637828M

Public Roads Div.	State Dist. No.	State Project No.	Federal Project No.	Fiscal Year	County	Sheet No.	Total Sheets
W.V.	05	X312 -H- 93.37	APD-0484 (236) C	2006	GRANT	141	389

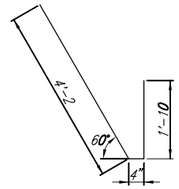

TYPE 9

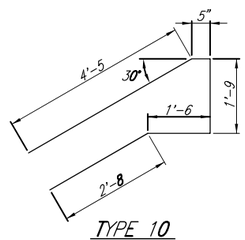

TYPE 10

CUTTING INCREMENTS

1. 6 7/8" Cutting Increment (4 Sets, 10 Ea.Set)
2. 1'-8 3/4 Cutting Increment (4 Sets, 10 Ea.Set)
3. 7" Cutting Increment (4 Sets, 9 Ea.Set)
4. 2'-7 3/8 ± Cutting Increment (2 Sets, 4 Ea.Set)
5. 2'-7 1/4 ± Cutting Increment (2 Sets, 5 Ea.Set)
6. 3 3/8" Cutting Increment (4 Sets, 22 Ea.Set)
7. 3'-7 1/4 ± Cutting Increment (4 Sets, 6 Ea.Set)
8. 2 1/2" ± Cutting Increment (4 Sets, 31 Ea.Set)

STRUCTURE

REINFORCING BAR BILL

MARK	TYPE	SIZE	NO.	LENGTH
C501	1	#5	252	10'-9
C516	Str.	#5	424	33'-1
C602	Str.	#6	268	3'-8
C609	Str.	#6	80	35'-6
C901	Str.	#9	126	25'-0
C1001	Str.	#10	250	25'-0
C1101	2	#11	1000	16'-9
C1102	3	#11	500	17'-0
C1103	4	#11	1000	12'-6

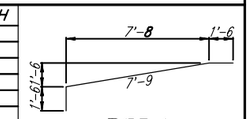

TYPE 1

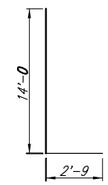

TYPE 2

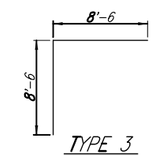

TYPE 3

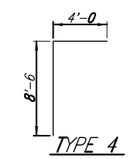

TYPE 4

WINGWALLS

REINFORCING BAR BILL

	MARK	TYPE	SIZE	NO.	LENGTH
	C503	7	#5	58	9'-8
	C504	Str.	#5	8	28'-2
	C505	9	#5	30	6'-4
	C506	10	#5	30	10'-9
	C507	Str.	#5	18	15'-9
	C508	Str.	#5	18	16'-6
	C509	Str.	#5	2	16'-9
	C510	Str.	#5	2	17'-6
4	C511	Str.	#5	8	5'-5 to 13'-3
5	C512	Str.	#5	10	3'-6 to 14'-0
	C513	Str.	#5	32	22'-9
	C514	Str.	#5	4	23'-9
7	C515	Str.	#5	24	3'-0 to 21'-0
	C603	Str.	#6	168	9'-2
1	C604	Str.	#6	40	18'-1 to 23'-3
2	C605	Str.	#6	40	23'-3 to 38'-10
3	C606	Str.	#6	36	4'-6 to 9'-2
	C607	5	#6	4	7'-0
	C608	6	#6	4	7'-0
	C701	8	#7	240	8'-9
	C702	Str.	#7	28	14'-0
6	C703	Str.	#7	88	8'-0 to 13'-11
8	C704	Str.	#7	124	7'-6 to 13'-11

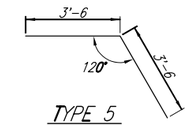

TYPE 5

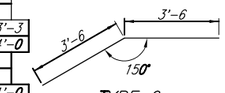

TYPE 6

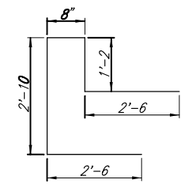

TYPE 7

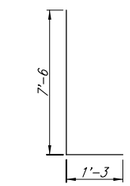

TYPE 8

QUANTITIES

	ITEM NO.	ITEM	UNIT	QUANTITY
*		SELECT MATERIAL FOR BACKFILL	CY.	916
*		CLASS B CONCRETE	CY.	118
*		CLASS K CONCRETE	CY.	555
*		REINFORCING STEEL BAR	LB.	261254
	212001-000	STRUCTURE EXCAVATION	CY.	485
	601006-001	CLASS D CONCRETE	CY.	15
	618001-001	PRECAST REINFORCED CONCRETE ARCH-TOPPED CULVERT	LF.	125
	618002-001	PRECAST REINFORCED CONCRETE FLAT-TOPPED CULVERT	LF.	125
	618003-001	CAST-IN-PLACE REINFORCED CONCRETE CULVERT	LF.	125

QUANTITIES

	ITEM NO.	ITEM	UNIT	QUANTITY
*		SELECT MATERIAL FOR BACKFILL	CY.	129
*		CLASS B CONCRETE	CY.	89
*		CLASS K CONCRETE	CY.	60
*		REINFORCING STEEL BAR	LB.	19012
	212001-000	STRUCTURE EXCAVATION	CY.	262
	601006-001	CLASS D CONCRETE	CY.	15
	618004-001	WINGWALL FOR CONCRETE CULVERT	EA.	4

*Indicates For Information Only, actual quantity incidental to Item No. 618001-001, 618002-001, 618003-001 or 618004-001. (As directed by WVDOT Special Provision 618)

REVISION NUMBER	SHEET NUMBER	REVISIONS	DATE	BY

DESIGNED BY AJR CHECKED BY CMS DATE 9/04
DETAILED BY DAM CHECKED BY AJR DATE 9/04
TRACED BY CHECKED BY DATE

WVDOT – DIVISION OF HIGHWAYS
RAMPS C & D OVER THORN RUN

STRUCTURE DETAILS

PROJECT NO. X312-H-93.37

NEFF, LONGEST & BEAM & ASSOC. CONSULTING ENGINEERS
CHARLESTON, W. VA. INDIANAPOLIS, IND.

DATE	SCALE	CULVERT NO.	DRWG. NO.
	AS NOTED	10461	7 of 9

Public Roads Div.	State Dist. No.	State Project No.	Federal Project No.	Fiscal Year	County	Sheet No.	Total Sheets
W.V.	05	X312 -H- 93.37	APD-0484 (236)C	2006	GRANT	142	389

VICINITY MAP

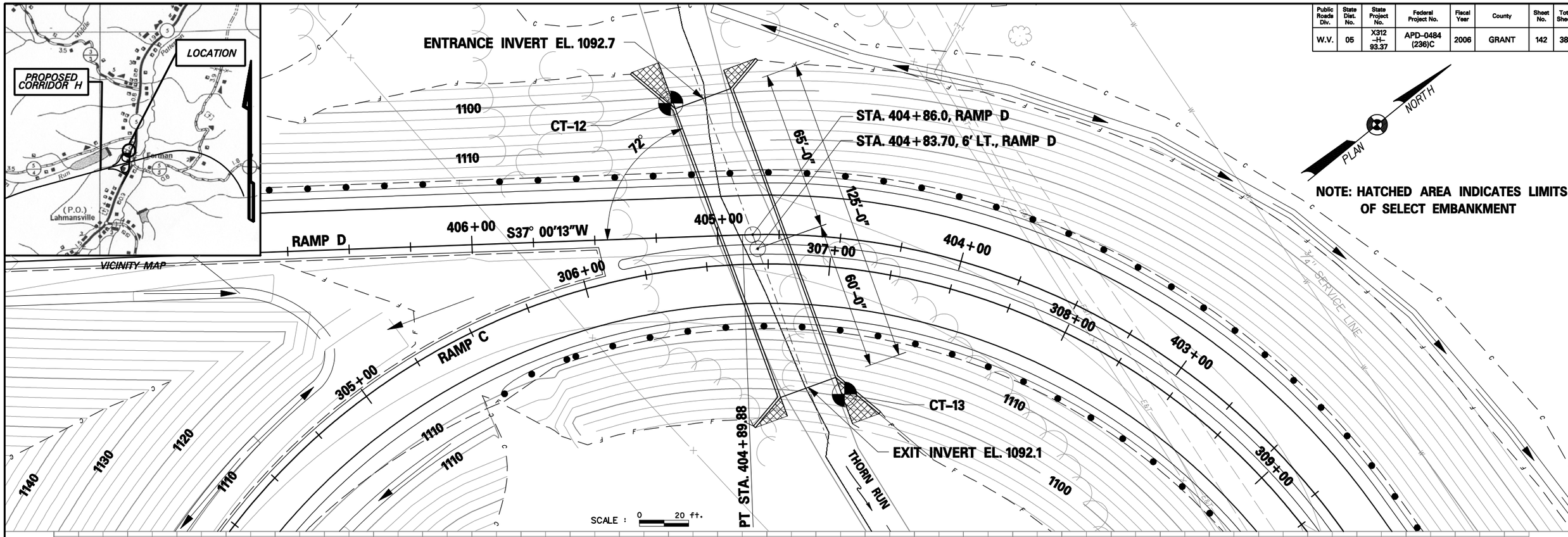

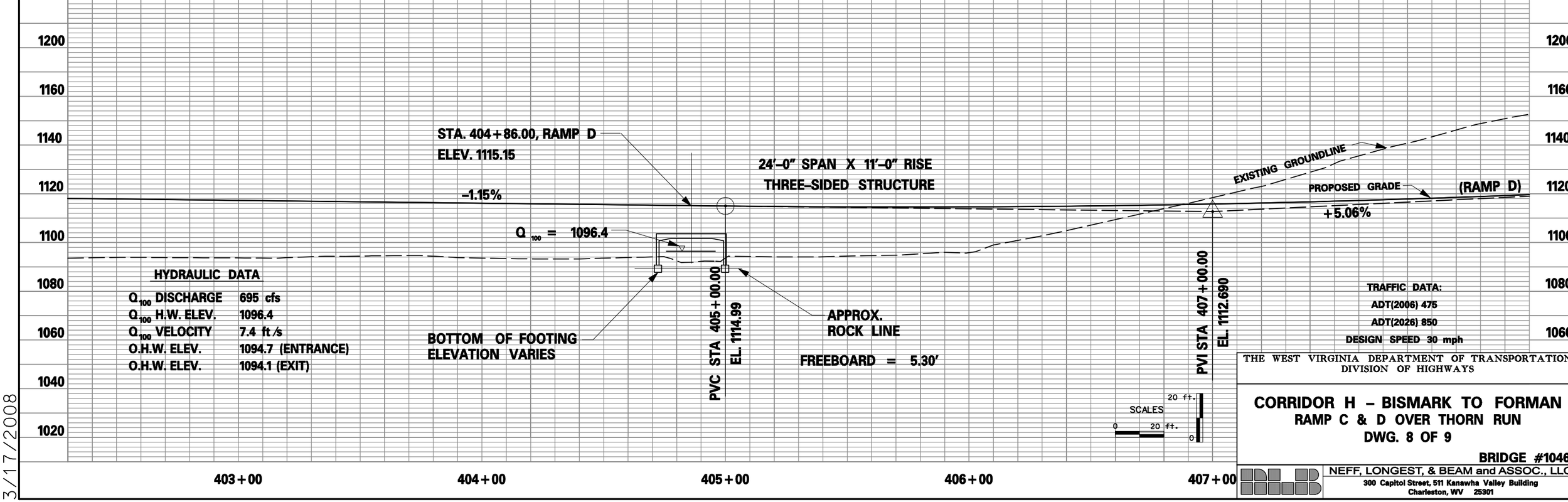

THE WEST VIRGINIA DEPARTMENT OF TRANSPORTATION
DIVISION OF HIGHWAYS

CORRIDOR H – BISMARK TO FORMAN
RAMP C & D OVER THORN RUN
DWG. 8 OF 9

BRIDGE #10461

NEFF, LONGEST, & BEAM and ASSOC., LLC
300 Capitol Street, 511 Kanawha Valley Building
Charleston, WV 25301

3/17/2008

Public Roads Div.	State Dist. No.	State Project No.	Federal Project No.	Fiscal Year	County	Sheet No.	Total Sheets
W.V.	05	X312 -H- 93.37	APD-0484 (236) C	2006	GRANT	143	389

BORING CT-12
STA.405+20
70' Rt.
ELEV.1093.0

1085 DATUM

	ELEVATION	SAMPLES	BLOWS FOR LAST 12" OR % ROCK RECOVERY	RQD
Brown SILTY TO SANDY CLAY with rock fragments, moist	1093.0 / 1090.2		50/4"	
Dark gray SILTY SHALE, broken, medium hard			72%	21
	1080.2		100%	68

Bottom of Test Boring @ 12.8 ft.
Approx. Bottom of Footing El.1088.0

BORING CT-13
STA.404+30
80' Lt.
ELEV.1093.4

	ELEVATION	SAMPLES	BLOWS FOR LAST 12" OR % ROCK RECOVERY	RQD
Brown SILTY TO SANDY CLAY with rock fragments, moist, medium stiff	1093.4 / 1088.4		50/0"	
Dark gray SILTY SHALE, medium hard			95%	65
	1078.4			

Bottom of Test Boring @ 15.0 ft.
Approx. Bottom of Footing El.1087.4

Blow counts taken from Standard Penetration Tests.
▼ Indicates ground water after 24 hrs.

REVISION NUMBER	SHEET NUMBER	REVISIONS	DATE	BY

DESIGNED BY ____ CHECKED BY ____ DATE ____
DETAILED BY JRT CHECKED BY AJR DATE 9/04
TRACED BY ____ CHECKED BY ____ DATE ____

WVDOT – DIVISION OF HIGHWAYS
RAMPS C AND D OVER THORN RUN

SOIL BORINGS

PROJECT NO. X312-H-93.37

NEFF, LONGEST & BEAM & ASSOC.
CONSULTING ENGINEERS
CHARLESTON, W. VA.
INDIANAPOLIS, IND.

DATE	SCALE	CULVERT NO.	DRWG. NO.
	1"=5'	10461	9 of 9