WEST VIRGINIA
DEPARTMENT OF TRANSPORTATION
DIVISION OF HIGHWAYS
PLANS FOR CONSTRUCTION
OF
STATE HIGHWAY

FEDERAL PROJECT NO. BR-0012(042)E
STATE PROJECT NO. S317-12-0.89 00
COUNTY ROUTE NO. 12
CLAY(OUTSIDE) & CLAY(SHINNSTON) DISTRICTS
HARRISON COUNTY

SCOTT SLAB BRIDGE

	Station		Station		Roadway		Bridge	Miles
Roadway	99+96.16	to	103+30.25	=	334.09	=		0.063
Bridge	103+30.25	to	103+75.47	=		=	45.22	0.009
Roadway	103+75.47	to	106+00.00	=	224.53	=		0.042
	Total Project Length			=	558.62	=	45.22	0.114

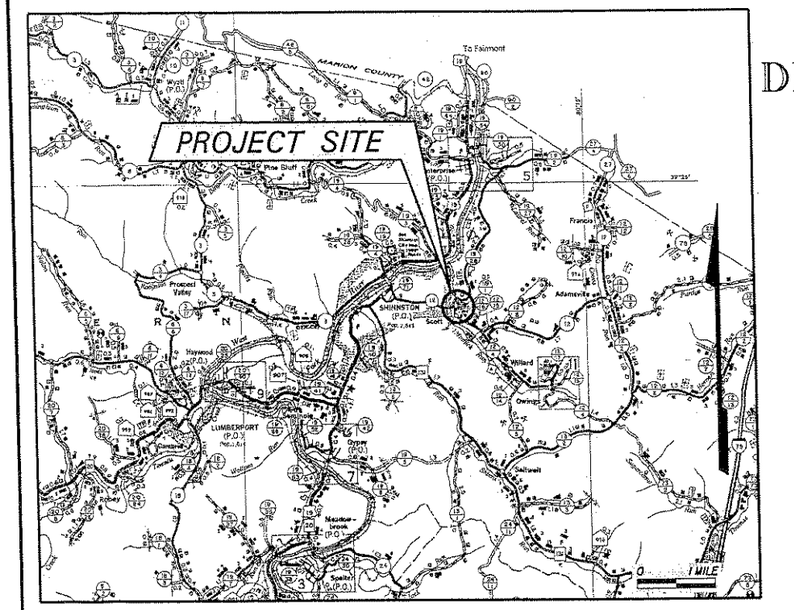

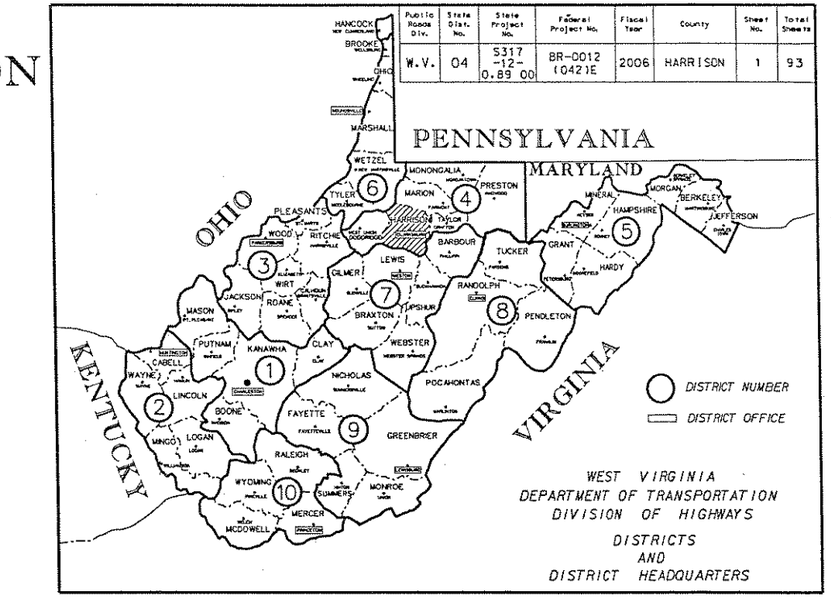

UTILITIES

ALLEGHENY POWER SYSTEMS (ELECTRIC)
CITY OF SHINNSTON (WATER)
LUMBERPORT – SHINNSTON GAS COMPANY (GAS)
CSX TRANSPORTATION (RAILROAD)
VERIZON WV, INC. (TELEPHONE)

TYPE OF CONSTRUCTION

GRADE, DRAIN, PAVE, WATER LINE RELOCATION & BRIDGE #10570

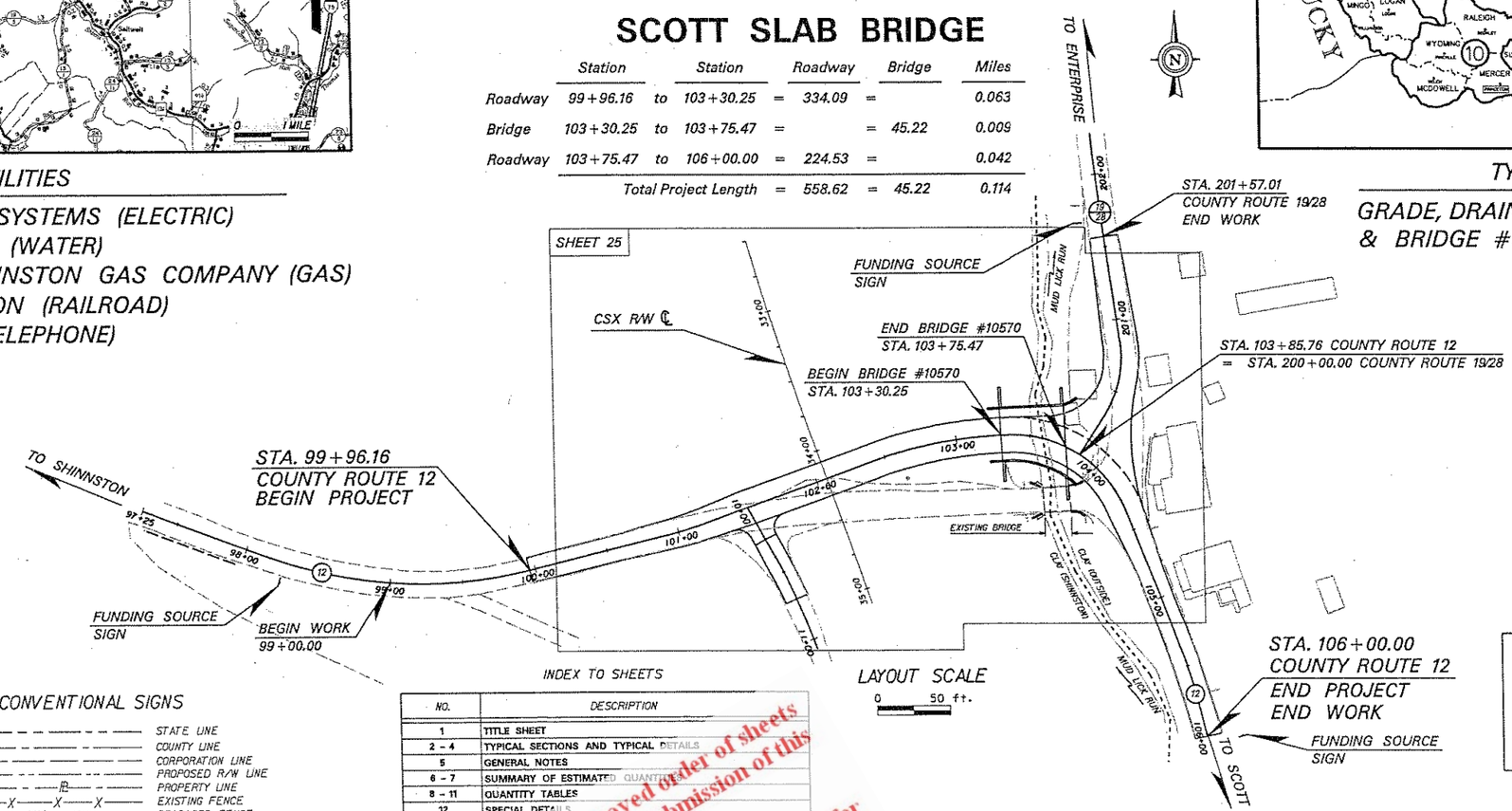

NOTES: STANDARD DETAIL BOOK VOL. I DATED JAN. 1, 2000 & VOLUME II DATED JAN. 1, 1994, SHALL APPLY TO THIS PROJECT.

PREPARED BY: URS
Kenneth D Bryant
REGISTERED ENGINEER DATE 9/12/2005

KENNETH D BRYANT
REGISTERED
12346
STATE OF
WEST VIRGINIA
PROFESSIONAL ENGINEER

SCALES

PLAN HOR. 0 – 20 ft.
PROFILE VERT. 0 – 5 ft.
HOR. 0 – 20 ft.

DESIGN DESIGNATION

A.D.T. (2004) =	1900
A.D.T. (2024) =	2800
D.H.V. (2024) =	560
D	(2024) = 60/40
T	% D.H.V. = 1%
V	= 30 M.P.H.

DESIGN EXCEPTION

	CRITERIA	PROPOSED
Shoulder Width	8' Paved	3' Unpaved
Horizontal Curve	V = 30mph	V = 15mph
Superelevation	4%	RC

CONVENTIONAL SIGNS

STATE LINE
COUNTY LINE
CORPORATION LINE
PROPOSED R/W LINE
PROPERTY LINE
EXISTING FENCE
PROPOSED FENCE
EDGE OF STREAM
PROPOSED GUARD RAIL
EXISTING GUARD RAIL
RAILROAD
GAS LINE
WATER LINE
TELEPHONE LINE
ELECTRIC LINE
TELEPHONE POLE
POWER POLE
COMBINED POWER AND TELEPHONE POLE
TREE
SHRUB
RIGHT OF WAY MARKER

INDEX TO SHEETS

NO.	DESCRIPTION
1	TITLE SHEET
2 – 4	TYPICAL SECTIONS AND TYPICAL DETAILS
5	GENERAL NOTES
6 – 7	SUMMARY OF ESTIMATED QUANTITIES
8 – 11	QUANTITY TABLES
12	SPECIAL DETAILS
13	TRAFFIC SKETCH
14	REFERENCE POINT
15	GEOMETRIC LAYOUT SHEET
16	PAVEMENT PLANS & INTERSECTION DETAILS
17	BRIDGE PLANING PLAN
18	SUPERELEVATION TABLE AND DIAGRAM
19 – 21	MAINTENANCE OF TRAFFIC PLANS
22	OWNERSHIP INDEX AND PROPERTY MAP
25	PLAN SHEET
26 – 28	PROFILE SHEETS
29 – 32	SIGNING AND PAVEMENT MARKINGS
33 – 36	SOILS AND GEOLOGIC DATA
37 – 64	BRIDGE PLANS
65 – 70	WATER LINE RELOCATION
71	METHOD OF SECTIONS
72 – 93	CROSS SECTIONS

The Version approved order of sheets was determined at the submission of this project. For the new order of sheets please refer to the design Directive DD701.

LAYOUT SCALE 0 – 50 ft.

REVISION NUMBER	SHEET NUMBER	REVISIONS	DATE	BY

11-3 2005
I HEREBY CERTIFY THAT THIS IS A CORRECT COPY OF THE PLANS OF PROJECT S317-12-0.89 00, BR-0012(042)E
Kay Hutchinson
EXECUTIVE SECRETARY

RECOMMENDED William Mooney
DESIGNER
RECOMMENDED FOR APPROVAL Donald J. Morris
STATE HIGHWAY ENGINEER
APPROVED Paul A. Mattox, Jr.
COMMISSIONER OF HIGHWAYS

PROJECT NO. S317-12-0.89 00, BR-0012(042)E

01\21534954\Scotttslab\cad\dgn\rdy_fit_scotttslab.dgn Master 09/28/2005

Public Roads Div.	State Dist. No.	State Project No.	Federal Project No.	Fiscal Year	County	Sheet No.	Total Sheets
W.V.	04	5317 -12- 0.89 00	BR-0012 (042)E	2006	HARRISON	2	93

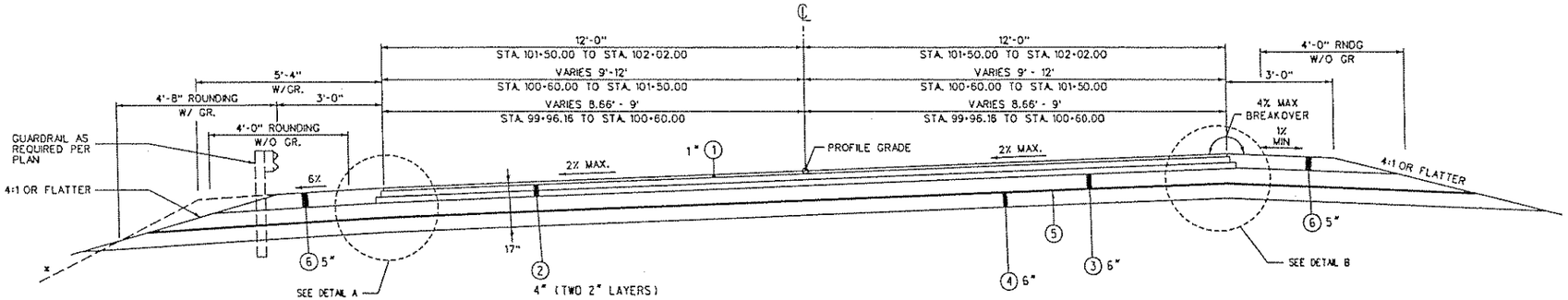

C.R. 12

SUPERELEVATED SECTION, CURVE LEFT
STA 99+96.16 TO STA 102+38.50

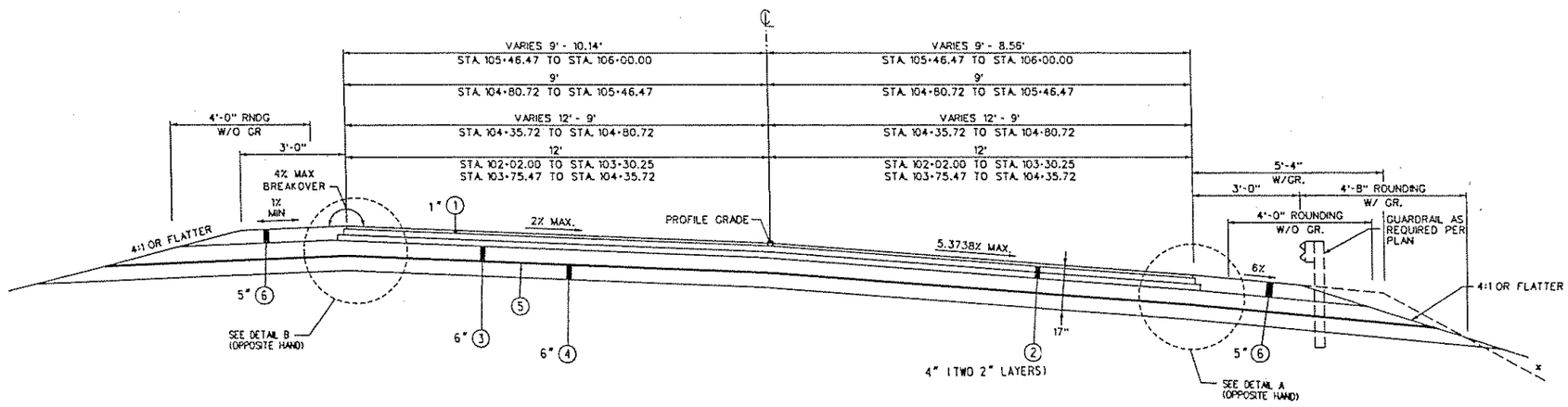

C.R. 12

SUPERELEVATED SECTION, CURVE RIGHT
STA 102+38.50 TO STA 103+30.25
STA 103+75.47 TO STA 106+00.00

NOTES:

1. FOR ALL TYPICAL SECTIONS ON ALL SHEETS WHERE THE FREE DRAINING BASE COURSE IS USED, THE SLOPE OF THE SUBGRADE AND ALL PAVEMENT COURSES SHALL BE AT THE SAME SLOPE AS THE TOP OF THE FINISHED PAVEMENT.

2. PAVEMENT DESIGN MIX ON THIS PROJECT WILL BE IN ACCORDANCE WITH THE MEDIUM TRAFFIC CATEGORY.

* SLOPES VARY: SEE CROSS-SECTIONS.

LEGEND:

(1) ITEM 401002-001 MARSHALL HOT-MIX ASPHALT WEARING COURSE, STONE OR GRAVEL, TYPE I, TN
(2) ITEM 401001-001 MARSHALL HOT-MIX ASPHALT BASE COURSE, STONE OR GRAVEL, TYPE II, TN
(3) ITEM 307001-001 AGGREGATE BASE COURSE, CLASS 1, CY
(4) ITEM 207002-000 SUBGRADE, CY
(5) ITEM 207034-000 FABRIC FOR SEPARATION, SY
(6) ITEM 307001-000 AGGREGATE BASE COURSE, CLASS 10, CY

SLOPES VARY: SEE CROSS-SECTIONS FOR TOP OF CUT AND TOE OF FILL DETAILS, AND FOR DITCH INVERTS AND OFFSETS.

SCALE: N.T.S.

PREPARED BY
URS
CHARLESTON, WV

REVISION NUMBER	SHEET NUMBER	REVISION	DATE	BY

THE WEST VIRGINIA DEPARTMENT OF TRANSPORTATION
DIVISION OF HIGHWAYS

TYPICAL SECTIONS

a:\21534954\ScottSlab\cad\dgn\rdy_typ_scottslab.dgn Master 08/25/2005

Public Roads Div.	State Dist. No.	State Project No.	Federal Project No.	Fiscal Year	County	Sheet No.	Total Sheets
W.V.	04	S317 -12- 0.89 00	BR-0012 (042)E	2006	HARRISON	3	93

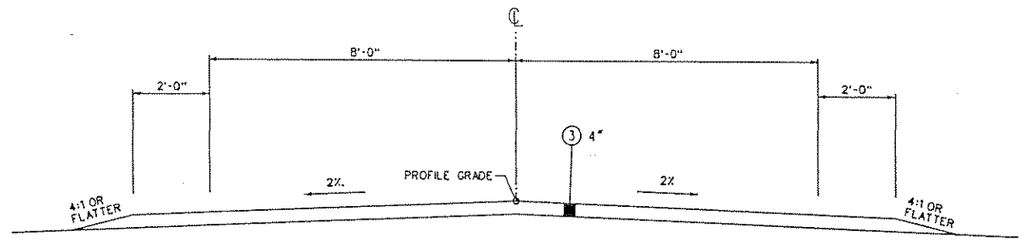

DRIVE 1

STA 10+24.82 TO STA 10+70.29

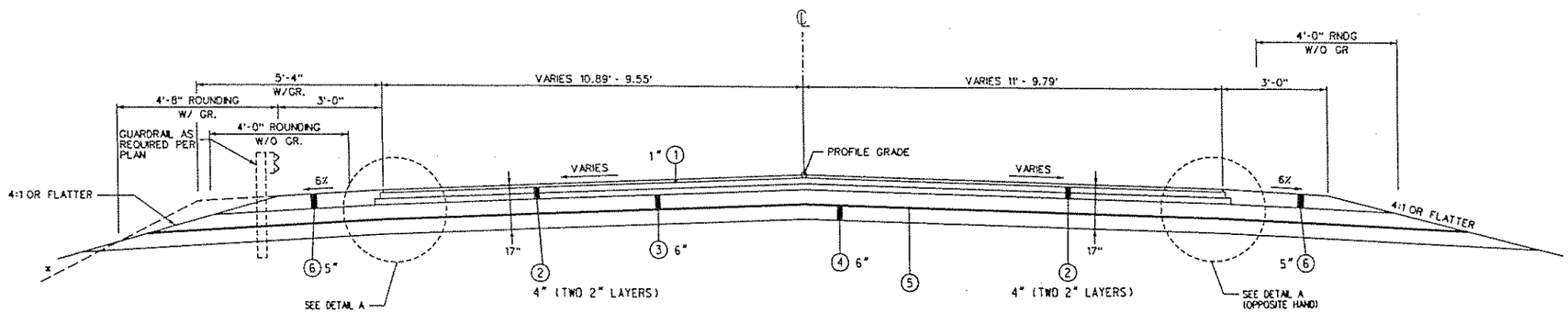

C.R. 19/28

STA 201+15.08 TO STA 201+57.01

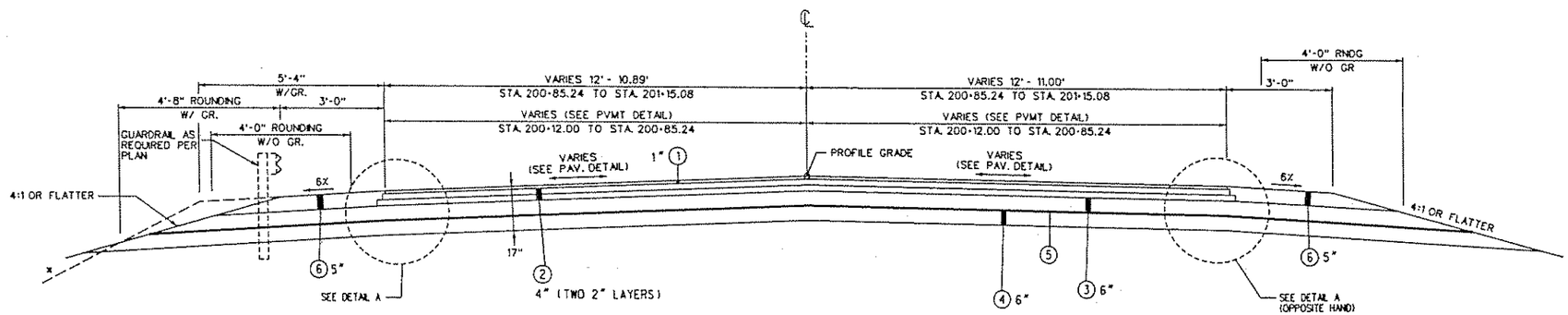

C.R. 19/28

SUPERELEVATED SECTION, CURVE LEFT

STA 200+12.00 TO STA 201+15.08

LEGEND:

1. ITEM 401002-001 MARSHALL HOT-MIX ASPHALT WEARING COURSE, STONE OR GRAVEL, TYPE I, TN
2. ITEM 401001-001 MARSHALL HOT-MIX ASPHALT BASE COURSE, STONE OR GRAVEL, TYPE II, TN
3. ITEM 307001-001 AGGREGATE BASE COURSE, CLASS I, CY
4. ITEM 207002-000 SUBGRADE, CY
5. ITEM 207034-000 FABRIC FOR SEPARATION, SY
6. ITEM 307001-000 AGGREGATE BASE COURSE, CLASS 10, CY

SLOPES VARY: SEE CROSS-SECTIONS FOR TOP OF CUT AND TOE OF FILL DETAILS, AND FOR DITCH INVERTS AND OFFSETS.

NOTES:

1. FOR ALL TYPICAL SECTIONS ON ALL SHEETS WHERE THE FREE DRAINING BASE COURSE IS USED, THE SLOPE OF THE SUBGRADE AND ALL PAVEMENT COURSES SHALL BE AT THE SAME SLOPE AS THE TOP OF THE FINISHED PAVEMENT.
2. PAVEMENT DESIGN MIX ON THIS PROJECT WILL BE IN ACCORDANCE WITH THE MEDIUM TRAFFIC CATEGORY.

* SLOPES VARY: SEE CROSS-SECTIONS.

SCALE: N.T.S.

PREPARED BY URS CHARLESTON, WV

REVISION NUMBER	SHEET NUMBER	REVISION	DATE	BY

THE WEST VIRGINIA DEPARTMENT OF TRANSPORTATION
DIVISION OF HIGHWAYS

TYPICAL SECTIONS

O:\21534954 (ScottSlab)\cad\dgn\rdy_typ_scottslab.dgn Master 09/23/2005

Public Roads Div.	State Dist. No.	State Project No.	Federal Project No.	Fiscal Year	County	Sheet No.	Total Sheets
W.V.	04	S317 -12- 0.89 00	BR-0012 (042)E	2006	HARRISON	4	93

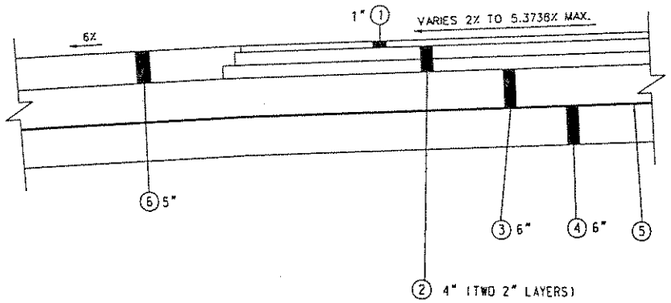

DETAIL A

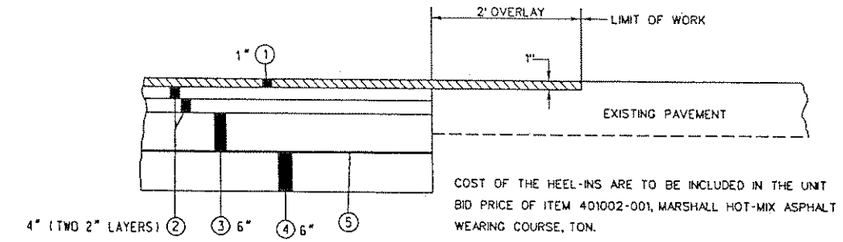

TYPICAL HEEL-IN DETAIL

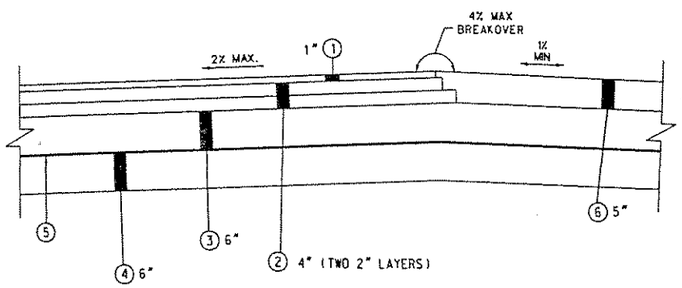

DETAIL B

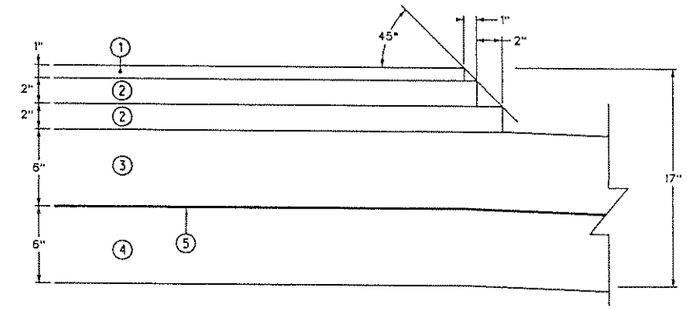

PAVEMENT STEPPING DETAIL
W/O FDB TRENCH

LEGEND:

1. ITEM 401002-001 MARSHALL HOT-MIX ASPHALT WEARING COURSE, STONE OR GRAVEL, TYPE I, TN
2. ITEM 401001-001 MARSHALL HOT-MIX ASPHALT BASE COURSE, STONE OR GRAVEL, TYPE II, TN
3. ITEM 307001-001 AGGREGATE BASE COURSE, CLASS I, CY
4. ITEM 207002-000 SUBGRADE, CY
5. ITEM 207034-000 FABRIC FOR SEPARATION, SY
6. ITEM 307001-000 AGGREGATE BASE COURSE, CLASS 10, CY

SLOPES VARY: SEE CROSS-SECTIONS FOR TOP OF CUT AND TOE OF FILL DETAILS, AND FOR DITCH INVERTS AND OFFSETS.

NOTES:

1. FOR ALL TYPICAL SECTIONS ON ALL SHEETS WHERE THE FREE DRAINING BASE COURSE IS USED, THE SLOPE OF THE SUBGRADE AND ALL PAVEMENT COURSES SHALL BE AT THE SAME SLOPE AS THE TOP OF THE FINISHED PAVEMENT.
2. PAVEMENT DESIGN MIX ON THIS PROJECT WILL BE IN ACCORDANCE WITH THE MEDIUM TRAFFIC CATEGORY.

* SLOPES VARY: SEE CROSS-SECTIONS.

PREPARED BY
URS
CHARLESTON, WV

REVISION NUMBER	SHEET NUMBER	REVISION	DATE	BY

THE WEST VIRGINIA DEPARTMENT OF TRANSPORTATION
DIVISION OF HIGHWAYS

TYPICAL DETAILS

D:\21534954\Scotts1lab\cad\dgn\rdy_typ_scotts1lab.dgn Master 09/23/2005

Public Roads Div.	State Dist. No.	State Project No.	Federal Project No.	Fiscal Year	County	Sheet No.	Total Sheets
W.V.	04	S317 -12- 0.89 00	BR-0012 (042)E	2006	HARRISON	5	93

GENERAL NOTES

GOVERNING SPECIFICATIONS

THE WEST VIRGINIA DEPARTMENT OF TRANSPORTATION, DIVISION OF HIGHWAYS, STANDARD SPECIFICATIONS ROADS AND BRIDGES, ADOPTED 2000, AS AMENDED BY THE WEST VIRGINIA DEPARTMENT OF TRANSPORTATION, SUPPLEMENTAL SPECIFICATIONS DATED JANUARY 1, 2003. THE CONTRACT DOCUMENTS AND THE CONTRACT PLANS ARE THE GOVERNING PROVISIONS APPLICABLE TO THIS PROJECT.

IN STREAM WORK

THE IN STREAM USE OF EQUIPMENT IS TO BE KEPT TO A MINIMUM. NO IN STREAM WORK SHALL BE CONDUCTED DURING THE FISH SPAWNING SEASON OF APRIL 1 THROUGH JULY 15. GREEN CONCRETE MUST NOT BE PUT INTO THE STREAM.

VERIFICATION OF DIMENSIONS

THE CONTRACTOR IS RESPONSIBLE FOR VERIFICATION OF ALL PLAN AND ELEVATION DIMENSIONS PRIOR TO ORDERING MATERIALS FOR THE CONSTRUCTION OF THE VARIOUS BID ITEMS ON THIS PROJECT.

COORDINATES

COORDINATES SHOWN ON THESE PLANS ARE WEST VIRGINIA STATE PLANE COORDINATES, NORTH AMERICAN DATUM 1983/1991. GRID FACTORS ARE NOT REQUIRED WHEN MAKING FIELD MEASUREMENTS.

ELEVATIONS

ALL ELEVATIONS SHOWN REFER TO US COAST & GEODETIC SURVEY BASED ON NORTH AMERICAN VERTICAL DATUM 1988.

BENCH MARKS

THE CONTRACTOR SHALL ATTEMPT TO HOLD BENCH MARK LOCATIONS THROUGH OUT THE LIFE OF THE PROJECT. IN THE EVENT THAT A BENCH MARK IS DISTURBED, THE CONTRACTOR, AS DIRECTED BY THE ENGINEER, WILL RELOCATE OR REESTABLISH THE BENCH MARK. THE COST TO RELOCATE OR RE-ESTABLISH A BENCH MARK SHALL BE INCIDENTAL TO CONTRACT ITEM 639001-001.

EROSION AND SEDIMENT CONTROL

DETAILS NOT SHOWN IN THE PLANS SHALL BE IN ACCORDANCE WITH THE WEST VIRGINIA DEPARTMENT OF HIGHWAYS EROSION AND SEDIMENT CONTROL MANUAL, DATED MARCH 1, 2003. IN THE EVENT THAT TEMPORARY EROSION AND POLLUTION MEASURES ARE ORDERED BY THE ENGINEER DUE TO THE CONTRACTOR'S NEGLIGENCE, CARELESSNESS OR FAILURE TO INSTALL PERMANENT CONTROLS AS PART OF THE WORK SCHEDULED, SUCH WORK SHALL BE PERFORMED BY THE CONTRACTOR AT THEIR OWN EXPENSE.
THE FIRST ORDER OF WORK FOR THE CONTRACTOR IS TO INSTALL SEDIMENT CONTROL STRUCTURES, SILT FENCE, HAY OR STRAW BALES, ETC. TO ESTABLISH EROSION CONTROL AT THE EARLIEST POSSIBLE DATE. INITIAL CLEARING AND GRUBBING IS TO ONLY BE WHAT IS NECESSARY IN ORDER TO ACCOMPLISH THESE OPERATIONS.
IN ADDITION, THE CONTRACTOR IS TO NAME AN INDIVIDUAL TO REVIEW THE EROSION CONTROL FEATURES. A MINIMUM OF ONCE A WEEK DURING PERIODS OF HEAVY PRECIPITATION AND/OR ACTIVE CONSTRUCTION AND ONCE A MONTH DURING WINTER SHUTDOWN. THE REVIEWS ARE TO ASSESS THE SUCCESS OF THE EROSION CONTROL, STRUCTURES, REVEGETATION EFFORTS AND ENSURE THAT REPLACEMENT, CLEANING AND/OR INSTALLATION OF ADDITIONAL FEATURES, IF NECESSARY, ARE CARRIED OUT.
PERIODIC INSPECTIONS WILL BE CONDUCTED BY REPRESENTATIVES OF THE WEST VIRGINIA DIVISION OF THE ENVIRONMENTAL PROTECTION AGENCY TO ENSURE THAT THE REQUIREMENTS OF THE NATIONAL POLLUTANT DISCHARGE ELIMINATION SYSTEM (NPDES) PERMIT IS BEING FULFILLED. REPRESENTATIVES OF THE OTHER RESOURCE AGENCIES MAY CONDUCT PERIODIC INSPECTIONS THROUGH THE LIFE OF THE CONTRACT.

DRAINAGE

THE CONTRACTOR SHALL MAINTAIN WORKING STORM DRAINAGE SYSTEMS THROUGHOUT THE WORK AREAS AT ALL TIMES DURING CONSTRUCTION. THE WORKING SYSTEM MAY CONSIST OF THE EXISTING STORM DRAINAGE SYSTEM, THE PROPOSED STORM DRAINAGE SYSTEM, OR A COMBINATION THEREOF. NO ADDITIONAL PAYMENT OR COMPENSATION WILL BE MADE FOR THIS WORK. ALL DRAINAGE OUTLET STRUCTURES SHALL BE FIELD ADJUSTED AS REQUIRED TO MATCH THE EXISTING GROUND AS DIRECTED BY THE ENGINEER, UNLESS OTHERWISE NOTED.

BEFORE ORDERING MATERIALS AND STARTING THE CONSTRUCTION OF ALL STORM SEWERS, CULVERTS AND INLETS, THE CONTRACTOR SHALL: WHERE A PROPOSED PIPE CONNECTS TO AN EXISTING PIPE, EXPLORE AND FULLY EXPOSE EXISTING PIPE DETERMINE THE SIZE, ELEVATION AND TYPE OF PIPE AT THE PLACE OF CONNECTION; AND DETERMINE IF THE PARTICULAR PIPE RUN CAN BE CONSTRUCTED AS DETAILED IN THE PLANS AND NOTIFY THE PROJECT ENGINEER OF THE FINDINGS.

IF THE PARTICULAR PIPE RUN CANNOT BE CONSTRUCTED IN ACCORDANCE WITH THE CONTRACT PLANS, ADJUSTMENTS TO THE PLANS WILL BE MADE AS DIRECTED BY THE PROJECT ENGINEER AND, WHEN NECESSARY, ADJUSTMENTS TO THE CONTRACT WILL BE MADE IN ACCORDANCE WITH SECTION 104.

PAVEMENT MIX DESIGN

THE H.M.A. PAVEMENT USED FOR THIS PROJECT SHALL BE MARSHALL MEDIUM MIX DESIGN. THE TERM MEDIUM REFERS TO EQUIVALENT SINGLE AXLE LOADS (ESAL'S) AND DOES NOT REFLECT THE QUALITY OF THE HOT MIX ASPHALT.

PIPE PLUGGING

THE COST OF PLUGGING THE PIPE AT STA. 103+00, 17' RT IS TO BE INCLUDED IN ITEM 201001-000, "CLEARING AND GRUBBING". PLUGGING FOR THE PIPE SHALL BE AS SHOWN IN THE "CONCRETE PLUG FOR EXISTING PIPES" DETAIL INCLUDED IN THESE PLANS.

BUILDING DEMOLITION AND ASBESTOS ABATEMENT

THE CONTRACTOR IS HEREBY ADVISED THAT ASBESTOS INSPECTIONS ARE NOT COMPLETE FOR THE BUILDING DEMOLITION NUMBERS. THE CONTRACTOR WILL NOT BE PERMITTED TO PERFORM THE BUILDING DEMOLITION ON THESE BUILDINGS UNTIL SUCH TIME AS THE ASBESTOS INSPECTIONS ARE COMPLETED BY THE WEST VIRGINIA DIVISION OF HIGHWAYS.

IF THE ASBESTOS INSPECTIONS REVEAL THAT ASBESTOS IS PRESENT IN ANY FORM, THE REPORT WILL BE MADE AVAILABLE TO THE CONTRACTOR, AND CONTRACTOR WILL ARRANGE FOR THE ASBESTOS ABATEMENT TO BE PERFORMED BY A FIRM LICENSED IN THE STATE OF WEST VIRGINIA TO PERFORM SUCH WORK. THIS WORK, IF REQUIRED, SHALL BE PERFORMED ACCORDING TO THE WEST VIRGINIA DEPARTMENT OF TRANSPORTATION, DIVISION OF HIGHWAYS SPECIAL PROVISION FOR SECTION 681, ASBESTOS ABATEMENT. PAYMENT FOR ANY REQUIRED ASBESTOS ABATEMENT WILL BE MADE ACCORDING TO THE WEST VIRGINIA DEPARTMENT OF TRANSPORTATION, DIVISION OF STANDARD SPECIFICATIONS, SECTION 104, SCOPE OF WORK.

STRUCTURES ON TITLE SHEET

NOTICE TO CONTRACTOR, SOME STRUCTURES ON THE SHEET HAVE BEEN DEMOLISHED UNDER A SEPARATE CONTRACT, SEE 'PLAN SHEET' FOR CLARIFICATION ON STRUCTURES THAT HAVE ALREADY BEEN REMOVED.

EXISTING OR RELOCATED UTILITIES

THE LOCATION AND/OR ELEVATION OF ALL KNOWN UTILITIES AS SHOWN ON THESE PLANS ARE BASED ON THE BEST AVAILABLE INFORMATION FROM EXISTING PLANS AND FIELD INFORMATION. THE CONTRACTOR SHALL CALL (800) 245-4848, PLUS ANY UTILITY COMPANIES NOT COVERED BY MISS UTILITY OF WEST VIRGINIA, AND HAVE ALL EXISTING UTILITIES FIELD LOCATED PRIOR TO ANY CONSTRUCTION. IT IS THE CONTRACTOR'S RESPONSIBILITY TO ASCERTAIN THE STATUS AND LOCATION OF EACH UTILITY WHERE PERFORMING WORK WHICH MAY AFFECT THESE FACILITIES, INCLUDING PROBING, EXCAVATION OR ANY OTHER PRECAUTION REQUIRED TO CONFIRM LOCATION . AND THE CONTRACTOR SHALL TAKE ALL REASONABLE PRECAUTIONS AGAINST DAMAGE TO THESE EXISTING KNOWN UTILITIES. HOWEVER, IN THE EVENT OF DAMAGE OR DISRUPTION TO UTILITIES WHICH ARE ACTIVE AND ARE TO REMAIN IN SERVICE, THE CONTRACTOR SHALL IMMEDIATELY NOTIFY THE RESPONSIBLE OFFICIAL OF THE ORGANIZATION OPERATING THE UTILITY INTERRUPTED. THE CONTRACTOR SHALL LEND ALL POSSIBLE ASSISTANCE IN RESTORING SERVICES AND SHALL ASSUME ALL COSTS, CHARGES OR CLAIMS CONNECTED WITH THE INTERRUPTION AND REPAIR OF SUCH SERVICES.

WORKING HOURS

THE CONTRACTOR SHALL BE PROHIBITED FROM WORKING WITHIN 600 FEET OF ANY RESIDENCE BETWEEN THE HOURS OF 10:00 P.M. AND 6:00 A.M. OR AS DIRECTED BY THE PROJECT ENGINEER. ALL CONSTRUCTION EQUIPMENT POWERED BY AN INTERNAL COMBUSTION ENGINE SHALL BE EQUIPED WITH A PROPERLY MAINTAINED MUFFLER.

GEOTECHNICAL INFORMATION

ADDITIONAL GEOTECHNICAL INFORMATION MAY BE AVAILABLE IN THE FORM OF REPORTS OF GEOLOGICAL AND SUBSURFACE INVESTIGATIONS. ANY INQUIRIES SHOULD BE DIRECTED TO:
GEOTECHNICAL SECTION
WVDOH, ENGINEERING DIVISION
STATE CAPITOL COMPLEX, BUILDING 5
1900 KANAWHA BOULEVARD WEST
CHARLESTON, WEST VIRGINIA 25305-0430

REMOVED DRAINAGE STRUCTURES

ANY EXISTING DRAINAGE STRUCTURES, HEADWALLS AND PIPES TO BE REMOVED SHALL BECOME THE PROPERTY OF THE CONTRACTOR. THE COST OF THE REMOVAL OF EXISTING PIPES, INLETS AND HEADWALLS SHALL BE INCLUDED IN THE UNIT BID PRICE FOR ITEM NO. 201000-000 "CLEARING AND GRUBBING", AND SHALL INCLUDE REMOVAL, DISPOSAL AND BACKFILL WITH SUITABLE MATERIAL. NO ADDITIONAL PAYMENT OR MEASUREMENT WILL BE MADE FOR THIS WORK.

TYPE G INLETS

ALL TYPE G INLETS ON THIS PROJECT SHALL HAVE TYPE 2 GRATES.

REMOVAL OF EXISTING GUARDRAIL

ALL EXISTING GUARDRAIL TO BE REMOVED WILL BECOME PROPERTY OF THE CONTRACTOR. REMOVAL OF EXISTING GUARDRAIL AT THE EXISTING CR 12 & CR 19/28 BRIDGE APPROACHES SHALL BE INCLUDED IN THE UNIT BID PRICE OF ITEM 201001-000, CLEARING AND GRUBBING.

CONTRACTOR COORDINATION

THE CONTRACTOR IS HEREBY INFORMED THAT OTHER CONTRACTORS MAY BE WORKING IN THE AREA. THE CONTRACTOR SHALL COORDINATE HIS MAINTENANCE OF TRAFFIC AND SIGNING WITH OTHER CONTRACTORS SO THERE ARE NO CONFLICTING, REPETITIOUS OR CONFUSING SIGNS. THE CONTRACTOR SHALL ALSO COORDINATE HIS MAINTENANCE OF TRAFFIC TEMPORARY CONCRETE BARRIER LOCATIONS TO PROVIDE A CONSISTENT TRANSITION THROUGH THE WORK ZONES TO THE SATISFACTION OF THE ENGINEER.

WASTE MATERIAL

ALL MATERIAL REMOVED AND NOT REUSED IN THE CONSTRUCTION OF THIS PROJECT SHALL BE REMOVED FROM THE PROJECT AND DISPOSED OF BY THE CONTRACTOR. REMOVAL OF DEBRIS FROM ANY LOCATIONS THAT WERE USED AS A DUMP SITE IS TO BE INCLUDED IN THE UNIT BID PRICE FOR ITEM NO. 201001-000, "CLEARING AND GRUBBING".

VERIFICATION OF CROSS SECTIONS

THE CONTRACTOR IS RESPONSIBLE FOR VERIFYING THE EXISTING GROUND LINE AS SHOWN ON THE CROSS SECTIONS PRIOR TO THE START OF ANY CONSTRUCTION.

FUNDING SOURCE IDENTIFICATION SIGNS

THREE FUNDING SOURCE ID SIGNS SHALL BE PROVIDED BY THE CONTRACTOR AT LOCATIONS SHOWN ON THE TITLE SHEET. THE CONTRACTOR SHALL FURNISH, ERECT AND MAINTAIN FUNDING SOURCE ID SIGNS. THE COST OF FURNISHING, ERECTING, MAINTAINING AND REMOVAL OF THESE SIGNS SHALL BE INCIDENTAL TO THE COST OF CONSTRUCTION OF THE PROJECT.

CORPORATION LIMITS

THIS PROJECT IN PART IS LOCATED WITHIN THE CORPORATE BOUNDARIES OF THE CITY OF SHINNSTON. THE CORPORATION LIMITS DEPICTED IN THE PLANS ARE BASED ON THE BEST AVAILABLE INFORMATION. THE CORPORATE BOUNDARIES HAVE NOT BEEN SURVEYED OR FIELD VERIFIED AND SHOULD BE CONSIDERED APPROXIMATE. SEPARATE QUANTITIES FOR WORK TO BE PERFORMED WITHIN THE CORPORATE BOUNDARY OF SHINNSTON ARE NOT PROVIDED IN THE PLANS. IT SHALL BE THE RESPONSIBILITY OF THE CONTRACTOR TO DETERMINE THE QUANTITIES APPLICABLE FOR BUSINESS AND OCCUPATION TAX PURPOSES.

PAVEMENT UNDERCUT

WHEN MATERIAL IS ENCOUNTERED AT THE SUBGRADE ELEVATION WHICH CANNOT BE COMPACTED TO THE REQUIRED DENSITY, THE MATERIAL SHALL BE UNDERCUT TO A MINIMUM OF 2 FT. AND BACKFILLED WITH SELECT EMBANKMENT. THE VOLUME EXCAVATED SHALL BE PAID FOR AS ITEM 207001-001, "UNCLASSIFIED EXCAVATION", AND SHALL INCLUDE REMOVAL, DISPOSAL, AND BACKFILL WITH SUITABLE MATERIAL.

PREPARED BY
URS
CHARLESTON, WV

REVISION NUMBER	SHEET NUMBER	REVISION	DATE	BY

THE WEST VIRGINIA DEPARTMENT OF TRANSPORTATION
DIVISION OF HIGHWAYS

GENERAL NOTES

P:\WVDOH SCOTT SLAB BRIDGE\CADD\Structure\PLANS\8-15-07\cdy_gns_scottslab01.dgn 8/16/2007 3:33:31 PM

Public Roads Div.	State Dist. No.	State Project No.	Federal Project No.	Fiscal Year	County	Sheet No.	Total Sheets
W.V.	04	S317 -12- 0.89 00	BR-0012 (042)E	2006	HARRISON	6	93

ITEM NO.	ALT	DESCRIPTION	UNIT	QUANTITY
		ROADWAY		
201001-000		CLEARING AND GRUBBING	LS	1
202001-000		BUILDING DEMOLITION NUMBER, 1-2/1	LS	1
202001-000		BUILDING DEMOLITION NUMBER, 1-2/2	LS	1
204001-000		MOBILIZATION	LS	1
207001-001		UNCLASSIFIED EXCAVATION	CY	1074
207002-000		SUBGRADE	CY	543
207034-000		FABRIC FOR SEPARATION	SY	3685
211001-000		UNCLASSIFIED BORROW EXCAVATION	CY	602
307001-000		AGGREGATE BASE COURSE, CLASS 1	CY	560
307001-000		AGGREGATE BASE COURSE, CLASS 10	CY	84
408002-001		BITUMINOUS MATERIAL	GA	68
415005-001		REMOVE EXISTING PAVEMENT SURFACE	SY	450
502001-012		12 INCH PORTLAND CEMENT CONCRETE APPROACH SLAB	SY	222
604009-020		24 INCH CORRUGATED STEEL PIPE END SECTION	EA	1
604009-022		30 INCH CORRUGATED STEEL PIPE END SECTION	EA	2
604076-020		24 INCH ALUMINUM COATED CORRUGATED STEEL PIPE, A2	LF	61
604076-022		30 INCH ALUMINUM COATED CORRUGATED STEEL PIPE, A2	LF	75
605009-001		TYPE G INLET	EA	1
607001-001		TYPE I GUARDRAIL, CLASS II	LF	181.3
607006-001		THRIE BEAM GUARDRAIL BRIDGE TRANSITION	EA	4
633003-001		DUMP ROCK GUTTER	CY	42
636008-001		TEMPORARY PAVEMENT MARKING - PAINT 4 IN SOLID LINE	LF	1450
636011-001		TRAFFIC CONTROL DEVICE	UN	5080
636012-010		PROJECT TRAFFIC CONTROL DEVICE CLEANING	EA	2
636013-001		INDIVIDUAL TRAFFIC CONTROL DEVICE CLEANING	EA	50
636014-001		FLAGGER	HR	600
636017-001		TEMPORARY CONCRETE BARRIER	LF	150
636025-001		WARNING LIGHTS, TYPE B	DAY	1080
637001-001		WATER FOR DUST PALLIATIVE	MG	2
638002-001		RIGHT OF WAY MARKER	EA	21
638004-001		OUTLET MARKER	EA	1
639001-001		CONSTRUCTION LAYOUT STAKE	LS	1
640003-001		BUILDING EQUIPMENT	LS	1
640006-001		SMALL FIELD OFFICE	MO	10

ITEM NO.	ALT	DESCRIPTION	UNIT	QUANTITY
		ROADWAY		
642001-001		TEMPORARY BERM	LF	1408
642002-001		SLOPE DRAIN	LF	2
642004-001		TEMPORARY SEED MIXTURE	LB	43
642004-002		SEED MIXTURE, B	LB	37
642004-003		SEED MIXTURE, D	LB	22
642005-001		MULCH, STRAW OR HAY	TN	1.4
642006-001		FERTILIZER	TN	0.3
642009-001		CONTOUR DITCH	LF	2285
642010-001		AGRICULTURAL LIMESTONE	TN	0.5
642011-001		HAY OR STRAW BALE	EA	64
642012-001		SILT FENCE	LF	1523
642031-001		DITCH CHECK	EA	18
642033-001		SEDIMENT TRAP	CY	76
642036-001		SEDIMENT REMOVAL	CY	38
652001-001		AGRICULTURAL LIMESTONE	TN	0.6
652002-001		FERTILIZER, 10-20-10	TN	0.2
652002-002		FERTILIZER, UREA FORMALDEHYDE	TN	0.1
652003-001		SEED MIXTURES, B, C-1, OR C-2	LB	18
652003-002		SEED MIXTURE, D	LB	12
652004-001		STRAW OR HAY MULCH	TN	0.7
664001-009		REMOVE AND RESET GREAT ATTENUATOR DEVICE	EA	1
664001-016		IMPACT ATTENUATING DEVICE, TYPE VIII	EA	2
		ROADWAY ALTERNATES		
401001-001	AA1	MARSHALL, HOT- MIX ASPHALT BASE COURSE, STONE OR GRAVEL, TYPE II	TN	409
401001-002	AA2	MARSHALL, HOT- MIX ASPHALT BASE COURSE, SLAG, TYPE II	TN	391
401002-001	AB1	MARSHALL, HOT- MIX ASPHALT WEARING COURSE, STONE OR GRAVEL, TYPE I	TN	125
401002-002	AB2	MARSHALL, HOT- MIX ASPHALT WEARING COURSE, SLAG, TYPE I	TN	121
636002-001	AC1	AGGREGATE FOR MAINTAINING TRAFFIC, STONE OR GRAVEL	TN	50
636002-002	AC2	AGGREGATE FOR MAINTAINING TRAFFIC, SLAG	TN	47
		SIGNING AND PAVEMENT MARKINGS		
657008-001		2.00 LB CHANNEL POST	LF	48
657010-001		3.00 LB CHANNEL POST	LF	92
657018-001		POST REMOVAL	EA	9
661001-001		0.080 IN FLAT SHEET SIGN	SF	38
661011-001		INSTALLATION OF REUSABLE SIGN	EA	2
663001-004		EDGE LINE, TYPE II, WHITE	LF	1450
663003-005		BARRIER LINE, TYPE II	LF	1400
663005-010		STOP LINE, TYPE V (24")	LF	22

REVISION NUMBER	SHEET NUMBER	REVISION	DATE	BY

PREPARED BY
URS
CHARLESTON, WV

THE WEST VIRGINIA DEPARTMENT OF TRANSPORTATION
DIVISION OF HIGHWAYS

SUMMARY OF ESTIMATED QUANTITIES

P:\WVDOH SCOTT SLAB BRIDGE\CADD\Structure\PLANS\8-15-07\6 of 93\rdy_qnt_scottslab12.dgn 9/11/2007

J07CD8098-QUANT e

Public Roads Div.	State Dist. No.	State Project No.	Federal Project No.	Fiscal Year	County	Sheet No.	Total Sheets
W.V.	04	S317 -12- 0.89 00	BR-0012 (042)E	2006	HARRISON	7	93

ITEM NO.	ALT	DESCRIPTION	UNIT	QUANTITY
		BRIDGE 10570		
203001-000		DISMANTLING STRUCTURE	LS	1
212001-000		STRUCTURE EXCAVATION	CY	246
212002-000		WET EXCAVATION	CY	382
212005-000		SELECT MATERIAL FOR BACKFILLING	CY	66
218001-001		RIPRAP	CY	462
601002-001		CLASS B CONCRETE	CY	220
601003-001		CLASS K CONCRETE	CY	11
601006-001		CLASS D CONCRETE	CY	10
601009-001		CLASS H CONCRETE	CY	62
602001-001		REINFORCING STEEL BAR	LB	15,463
602002-001		EPOXY COATED REINFORCING STEEL BAR	LB	20,912
615001-001		STEEL SUPERSTRUCTURE	LS	1
615029-001		NON-GUIDED BEARING, ELASTOMETRIC	EA	5
615030-001		FIXED BEARING, ELASTOMETRIC	EA	6
639001-001		CONSTRUCTION LAYOUT STAKE	LS	1
		WATER LINE RELOCATION		
639001-001		CONSTRUCTION LAYOUT STAKE	LS	1
670004-221		8 INCH DUCTILE IRON PIPE, TYPE I, CLASS 50	LF	89
670007-020		6 INCH PLASTIC PIPE, CLASS 200	LF	404
670007-022		8 INCH PLASTIC PIPE, CLASS 200	LF	278
670009-200		6 INCH GATE VALVE AND VALVE BOX	EA	1
670009-220		8 INCH GATE VALVE AND VALVE BOX	EA	1
670010-180		4 INCH STEEL CASING PIPE, THICKNESS 0.1875"	LF	70
670010-260		12 INCH STEEL CASING PIPE, THICKNESS 0.1875"	LF	62
670013-220		8 INCH FIRE HYDRANT	EA	1
670016-001		RELOCATE METER	EA	2
670019-001		SPECIAL VALVE, 2 INCH AIR RELEASE ASSEMBLY	EA	2
670019-120		2 INCH SPECIAL VALVE, BLOWOFF ASSEMBLY	EA	2
670021-060		1 INCH HOUSE CONNECTION	LF	100
		COMPUTER SYSTEM		
640004-001		COMPUTER SYSTEM FOR FIELD OFFICE	LS	1

PREPARED BY
URS
CHARLESTON, WV

REVISION NUMBER	SHEET NUMBER	REVISION	DATE	BY

THE WEST VIRGINIA DEPARTMENT OF TRANSPORTATION
DIVISION OF HIGHWAYS

SUMMARY OF ESTIMATED QUANTITIES

P:\WVDOH SCOTT SLAB BRIDGE\CADD\Structure\PLANS\8-15-07\7 of 93\rdg_qnt_scottslab03.dgn 9/11/2007 10:04:51 AM
J07CD8C86-QUANT c

Public Roads Div.	State Dist. No.	State Project No.	Federal Project No.	Fiscal Year	County	Sheet No.	Total Sheets
W.V.	04	S317 -12- 0.89 00	BR-0012 (042)E	2006	HARRISON	8	93

GRADING SUMMARY

LOCATION STATION	LOCATION STATION	TOTAL UNCLASSIFIED EXCAVATION 207001-001	UNSUITABLE EXCAVATION	SUITABLE EXCAVATION	SHRINK OR SWELL FACTOR	ADJUSTMENT EXCAVATION	UNCLASSIFIED EMBANKMENT	SELECT EMBANKMENT	TOTAL EMBANKMENT	EXCESS (+) OR BORROW (-)
		CY	CY	CY	%	CY	CY	CY	CY	CY
COUNTY ROUTE 12										
99+96.16	103+25.00	435	435	0	0.85	0	375	0	375	-375
103+75.47	106+00.00	147	147	0	0.85	0	58	0	58	-58
COUNTY ROUTE 19/28										
200+25.00	201+57.01	100	100	0	0.85	0	44	0	44	-44
DRIVE 1										
10+25.00	10+70.29	76	76	0	0.85	0	35	0	35	-35
BASELINE A										
40+00	41+50	316	316	0	0.85	0	0	0	0	0
TOTAL		1074	1074	0		0	512	0	512	-512

BORROW COMPUTATIONS

UNCLASSIFIED EMBANKMENT REQUIRED (FROM TABLE "GRADING SUMMARY") = ... 512 C.Y.

ADJUSTED EXCAVATION (FROM TABLE "GRADING SUMMARY") = ... 0 C.Y.

SELECT EMBANKMENT AVAILABLE (FROM TABLE "PROBABLE SOURCE OF SELECT EMBANKMENT") = ... 0 C.Y.

EMBANKMENT NEEDED = ... 512 C.Y.

EXCAVATION REQUIRED TO MEET EMBANKMENT REQUIREMENTS WITH 15% SHRINK FACTOR:

ITEM 211001-000, UNCLASSIFIED BORROW EXCAVATION = $\frac{\text{EMBANKMENT NEEDED}}{1-0.15}$ = 602 C.Y.

SUMMARY OF DRAINAGE QUANTITIES

LOCATION	PIPE SIZE	PIPE: 604076-022 ALUMINUM CTD 30" C.S.P. A2	PIPE: 604076-020 ALUMINUM CTD 24" C.S.P. A2	STRUCTURES: 605009-001 TYPE G INLET	STRUCTURES	STRUCTURES	END TREATMENT: 604009-022 END SECTION 30" FOR CSP	END TREATMENT	END TREATMENT: 604009-020 END SECTION FOR 24" CSP	END TREATMENT	REMARKS
STA., OFFSET TO STA., OFFSET	IN.	LF	LF	EA			EA.		EA.		
COUNTY ROUTE 12											
104+25, 27' LT TO 104+25, 34' RT	24		61	1					1		ES-3 TO ES-4
101+25, 34' RT TO 102+00, 34' RT	30	75					2				ES-1 TO ES-2
TOTAL		75	61	1			2		1		

PREPARED BY
URS
CHARLESTON, WV

REVISION NUMBER	SHEET NUMBER	REVISION	DATE	BY

THE WEST VIRGINIA DEPARTMENT OF TRANSPORTATION
DIVISION OF HIGHWAYS

QUANTITY TABLES

P:\WVDOH SCOTT SLAB BRIDGE\CADD\Structure\PLANS\8-15-87\8 of 93\dg_crt_scottslab04\9.26.2005\.dgn 9/7/2007
9:22:42 AM
J07CD6GV6-QUANT

Public Roads Div.	State Dist. No.	State Project No.	Federal Project No.	Fiscal Year	County	Sheet No.	Total Sheets
W.V.	04	S317 -12- 0.89 00	BR-0012 (042)E	2006	HARRISON	9	93

PAVING QUANTITIES

LOCATION		401001-001 MARSHALL H.M.A. BASE COURSE TYPE II STONE OR GRAVEL	401001-002 MARSHALL H.M.A. BASE COURSE TYPE II SLAG	401002-001 MARSHALL HOT-MIX ASPHALT WEARING COURSE TYPE I STONE OR GRAVEL	401002-002 MARSHALL HOT-MIX ASPHALT WEARING COURSE TYPE I SLAG	207034-000 FABRIC FOR SEPARATION	207002-000 SUBGRADE	307001-001 AGGREGATE BASE COURSE CLASS 10 STONE OR GRAVEL	307001-001 AGGREGATE BASE COURSE CLASS 1 STONE OR GRAVEL	408002-001 BITUMINOUS MATERIAL	REMARKS
STATION	STATION	TN	TN	TN	TN	SY	CY	CY	CY	GA	
COUNTY ROUTE 12											
99+96.16	103+30.25	183	175	45	43	1508	234	40	234		
103+75.47	106+00.00	115	110	28	28	971	150	27	155		
SUBTOTAL		298	285	73	71	2479	384	67	389		
COUNTY ROUTE 19/28											
200+12.00	201+57.01	105	100	26	25	741	154	17	123		
DRIVE 1											
10+12.79	10+70.29	6	6	2	2	37	5		12		
APPROACH SLAB				24	23	428			36	68	
TOTAL		409	391	125	121	3685	543	84	560	68	

GUARDRAIL

LOCATION		SIDE	ROADWAY LENGTH	607006-001 THRIE BEAM GUARDRAIL BRIDGE TRANSITION	607001-001 TYPE I GUARDRAIL CLASS II	REMARKS
STATION	STATION		L.F.	EACH	L.F.	
COUNTY ROUTE 12						
102+58.10	103+23.29	LT	65.19	1	43.75	G1-G2
102+62.67	103+22.37	RT	59.70	1	43.75	G3-G4
104+05.11	104+80.12	RT	75.01	1	56.25	G5-G6
SUBTOTAL			199.90	3	143.75	
COUNTY ROUTE 19/28						
200+30.54	200+84.25	LT	53.71	1	37.5	G7-G8
TOTAL			253.61	4	181.25	

DUMP ROCK GUTTER

STATION	SIDE	LENGTH	WIDTH	THICKNESS	DEPTH	633003-001 DUMP ROCK GUTTER	SIDE SLOPE
		FT	FT	FT	FT	CY	
102+50	RT	50	2.5	1	2	39	2:1
104+25	RT	5	2	1	1	3	2:1
TOTAL						42	

REVISION NUMBER	SHEET NUMBER	REVISION	DATE	BY

PREPARED BY
URS
CHARLESTON, WV

THE WEST VIRGINIA DEPARTMENT OF TRANSPORTATION
DIVISION OF HIGHWAYS

QUANTITY TABLES

P:\WVDOH SCOTT SLAB BRIDGE\CADD\Structure\PLANS\8-15-07\rdy_qnt_scottslab05(9.27.2005).dgn 8/16/2007 1:08:26 PM

Public Roads Div.	State Dist. No.	State Project No.	Federal Project No.	Fiscal Year	County	Sheet No.	Total Sheets
W.V.	04	S317 -12- 0.89 00	BR-0012 (042)E	2006	HARRISON	10	93

TEMPORARY POLLUTION CONTROL

LOCATION		642002-001 SLOPE DRAIN	642005-001 STRAW/HAY MULCH	642006-001 FERTILIZER	642011-001 HAY OR STRAW BALE	642012-001 SILT FENCE	642031-001 DITCH CHECK	642033-001 SEDIMENT TRAP	642036-001 SEDIMENT REMOVAL	642010-001 AGR. LIMESTONE	642001-001 TEMPORARY BERMS	642004-002 SEED MIXTURE B	642004-003 SEED MIXTURE D	642004-001 TEMPORARY SEED MIXTURE	642009-001 CONTOUR DITCH
STATION	STATION	LF	TN	TN	EA	LF	EA	CY	CY	TN	LF	LB	LB	LB	LF
COUNTY ROUTE 12															
99+96.16	103+25.00	1	0.70	0.14	28	668	9	33	17	0.26	625	24	7	21	1002
103+75.47	106+00.00		0.48	0.10	19	449	4	22	11	0.18	438	6	12	14	674
SUBTOTAL		1	1.18	0.24	47	1117	13	55	28	0.44	1063	30	19	35	1676
COUNTY ROUTE 19/28															
200+25.00	201+57.01	1	0.17	0.03	12	290	3	15	7	0.06	220	5	2	5	435
DRIVE 1															
10+25.00	10+70.29		0.06	0.01	5	116	2	6	3	0.02	125	2	1	2	174
BASELINE A															
40+00	41+50		0.02	0						0.01	0	0	0	1	
TOTAL		2	1.43	0.29	64	1523	18	76	38	0.53	1408	37	22	43	2285

PERMANENT SEEDING AND MULCHING

LOCATION		SEEDING AREA SLOPES 3:1 OR FLATTER	SEEDING AREA SLOPES STEEPER THAN 3:1	MULCHING AREA SLOPES 1.5:1 OR FLATTER	MULCHING AREA SLOPES STEEPER THAN 1.5:1	652003-002 SEED MIX TYPE D	652004-001 STRAW/HAY MULCH	652002-001 FERTILIZER 10-20-10	652002-002 UREA FORMALDEHYDE FERTILIZER	652001-001 AGRICULTURAL LIMESTONE	652003-001 SEED MIXTURES, B, C-1, OR C-2
STATION	STATION	SF	SF	SF	SF	LB	TN	TN	TN	TN	LB
COUNTY ROUTE 12											
99+96.16	103+25.00	5425	2200	7625	0	3	0.4	0.09	0.03	0.30	12
103+75.47	106+00.00	1400	3775	5175	0	6	0.2	0.06	0.02	0.20	3
SUBTOTAL		6825	5975	12,800	0	9	0.6	0.15	0.05	0.50	15
COUNTY ROUTE 19/28											
200+12.00	201+57.01	1100	775	1875	0	1	0.1	0.02	0.01	0.10	2
DRIVE 1											
10+12.12	10+70.29	405	293	698	0	1	0	0.01	0	0	1
BASELINE A											
40+00	41+50	75	125	200	0	1	0	0	0	0	0
TOTAL		8405	7168	15,573	0	12	0.7	0.18	0.06	0.60	18

REVISION NUMBER	SHEET NUMBER	REVISION	DATE	BY

PREPARED BY
URS
CHARLESTON, WV

THE WEST VIRGINIA DEPARTMENT OF TRANSPORTATION
DIVISION OF HIGHWAYS

QUANTITY TABLES

P:\WYOOH SCOTT SLAB BRIDGE\CADD\Structure\PLANS\8-15-07\rdy_qnt_scottslab10\9.27.2005\.dgn 8/16/2007 1:09:14 PM

Public Roads Div.	State Dist. No.	State Project No.	Federal Project No.	Fiscal Year	County	Sheet No.	Total Sheets
W.V.	04	S317 -12- 0.89 00	BR-0012 (042)E	2006	HARRISON	11	93

BUILDING DEMOLITION & ASBESTOS ABATEMENT

LOCATION		DESCRIPTION	202001-000 BUILDING DEMOLITION	681001-001 ASBESTOS ABATEMENT	REMARKS
STATION	OFFSET		EA.	EA.	
103+70	48' LT	CAR PORT, 1-2/1	1	1*	
103+70	22' LT	FRAME SHED, 1-2/2	1	1*	
TOTAL			2	2*	

* ASBETOS INSPECTIONS ARE NOT COMPLETE. THE QUANTITY IS SHOWN FOR INFORMATIONAL PURPOSES ONLY AND MAY BE DELETED FROM THE PROPOSAL AND/OR CONTRACT.

OUTLET MARKERS

STATIONS	OFFSET		638004-001
	LEFT	RIGHT	EACH
COUNTY ROUTE 12			
103+41	96'		1
TOTAL			1

RIGHT OF WAY MARKERS

STATIONS	OFFSET		638002-001
	LEFT	RIGHT	EACH
COUNTY ROUTE 12			
100+31	20		1
100+58		20	1
101+32		71	1
101+50	40		1
101+81		69	1
102+09		42	1
102+53	43		1
102+96	41		1
103+15		64	1
103+31	91		1
103+51	103		1
103+93	104		1
104+19	53		1
104+52		84	1
104+52	21		1
105+36	40		1
106+00	25		1
106+00	20		1
COUNTY ROUTE 19/28			
201+57	20		1
201+57		20	1
201+56		30	1
TOTAL			21

CLEARING AND GRUBBING SUMMARY
(FOR INFORMATION ONLY)

LOCATION		CLEARING AND GRUBBING	
STATION	STATION	SF	ACRES
COUNTY ROUTE 12			
99+96.16	103+25.00	18.451	0.42
103+75.47	106+00.00	13.000	0.30
COUNTY ROUTE 19/28			
200+12.00	201+57.01	6.545	0.15
DRIVE 1			
10+25.00	10+70.29	1.840	0.04
BASELINE A			
40+00	41+50	2.425	0.06
TOTAL		42.261	0.97

REVISION NUMBER	SHEET NUMBER	REVISION	DATE	BY

PREPARED BY
URS
CHARLESTON, WV

THE WEST VIRGINIA DEPARTMENT OF TRANSPORTATION
DIVISION OF HIGHWAYS

QUANTITY TABLES

P:\WVDOH SCOTT SLAB BRIDGE\CADD\Structure\PLANS\8-15-07\rdg_qnt_scottslabli.dgn 8/16/2007 1:09:49 PM

Public Roads Div.	State Dist. No.	State Project No.	Federal Project No.	Fiscal Year	County	Sheet No.	Total Sheets
W.V.	04	S317 -12- 0.89 00	BR-0012 (042)E	2006	HARRISON	12	93

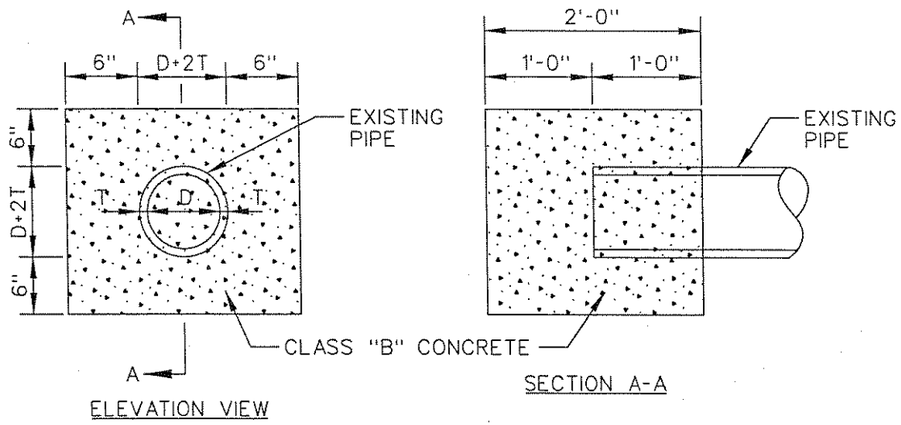

ELEVATION VIEW

SECTION A-A

NOTE:
THE COST OF ALL WORK FOR PLUGGING OF EXISTING PIPE TO BE INCLUDED IN THE COST OF "CLEARING AND GRUBBING".

CONCRETE PLUG FOR EXISTING PIPES

NOT TO SCALE

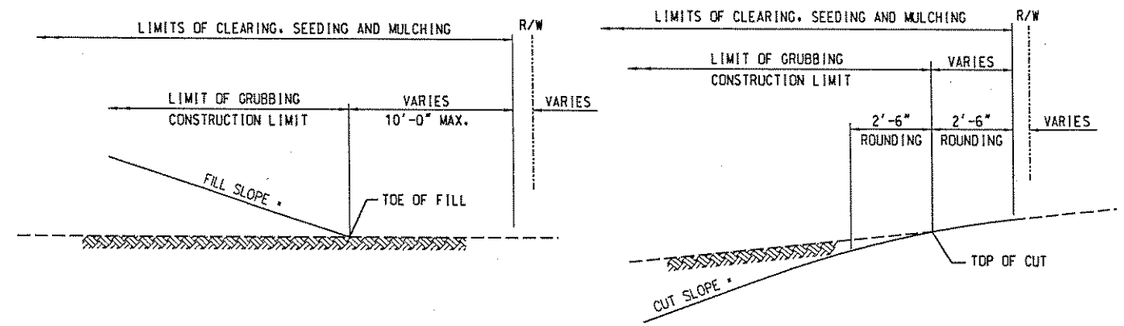

TYPICAL DETAILS

TOP OF CUT AND TOE OF FILL

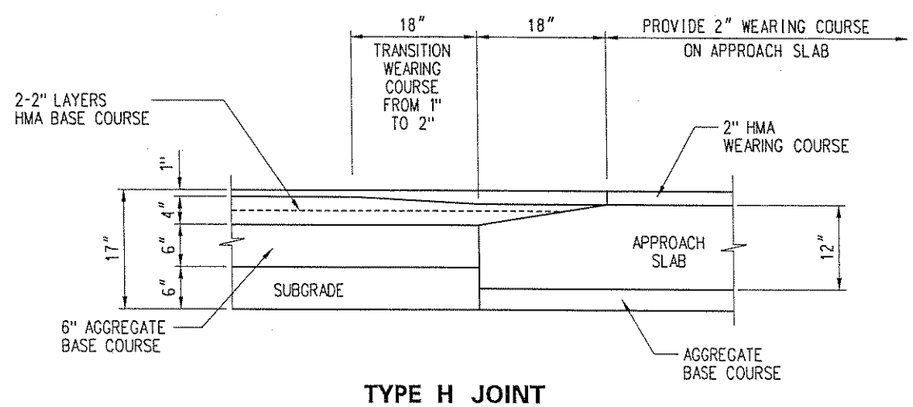

TYPE H JOINT

SCALE: N.T.S.

PREPARED BY
URS
CHARLESTON, WV

THE WEST VIRGINIA DEPARTMENT OF TRANSPORTATION
DIVISION OF HIGHWAYS

SPECIAL DETAILS

o:\21534954 (ScottSlab)\cad\dgn\rdy_dtl_scottslab02.dgn Master 01/12/2006

Public Roads Div.	State Dist. No.	State Project No.	Federal Project No.	Fiscal Year	County	Sheet No.	Total Sheets
W.V.	04	S317 -12- 0.89 00	BR-0012 (042)E	2006	HARRISON	13	93

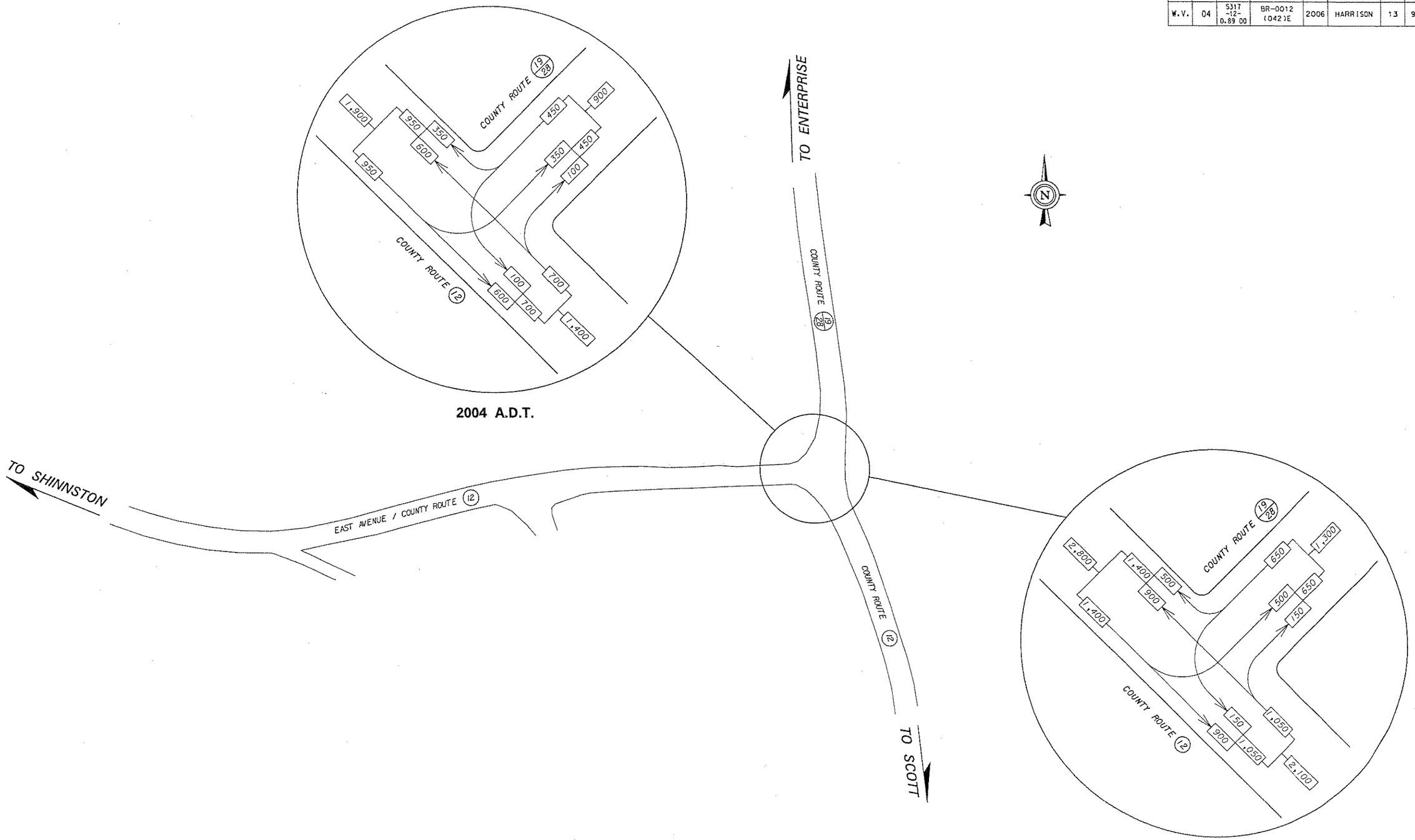

PREPARED BY
URS
CHARLESTON, WV

THE WEST VIRGINIA DEPARTMENT OF TRANSPORTATION
DIVISION OF HIGHWAYS

TRAFFIC SKETCH MAP

D:\21534954\Scotts\lab\cad\dgn\trf_map_scottslab.dgn Nestar 01/12/2006

Public Roads Div.	State Dist. No.	State Project No.	Federal Project No.	Fiscal Year	County	Sheet No.	Total Sheets
W.V.	04	S317 -12- 0.89 00	BR-0012 (042)E	2006	HARRISON	14	93

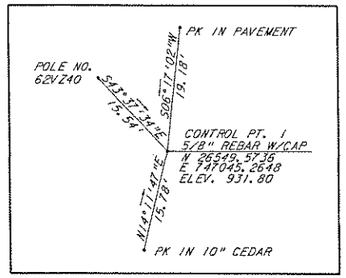

COUNTY ROUTE 12
CONTROL PT. 1
STA. 100+87.84, 27.03 RT.

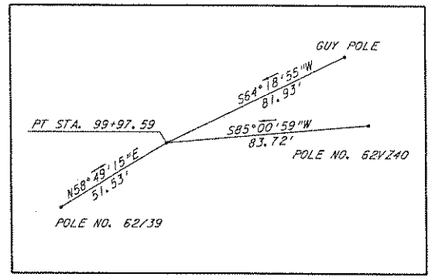

COUNTY ROUTE 12
REF. POINT, PT STA. 99+97.59

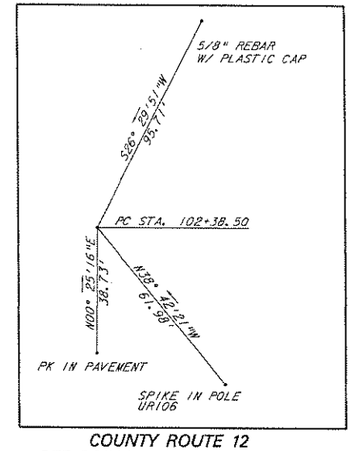

COUNTY ROUTE 12
REF. POINT, PC STA. 102+38.50

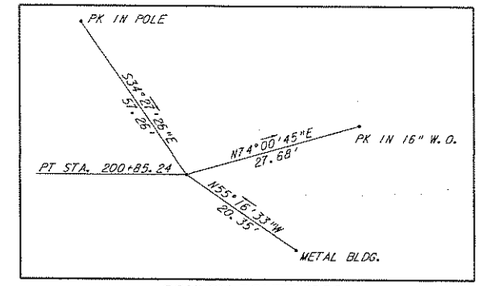

COUNTY ROUTE 19/28
REF. POINT, PT STA. 200+85.24

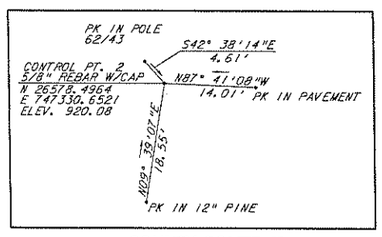

COUNTY ROUTE 12
CONTROL PT. 2
STA. 104+40.66, 26.73 RT.

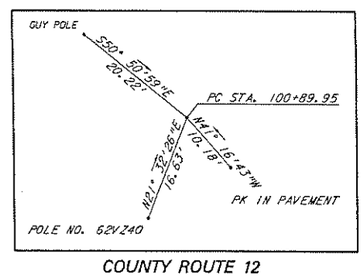

COUNTY ROUTE 12
REF. POINT, PC STA. 100+89.95

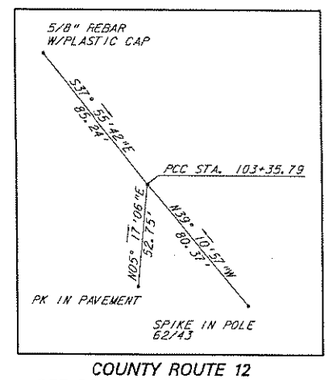

COUNTY ROUTE 12
REF. POINT, PCC STA. 103+35.79

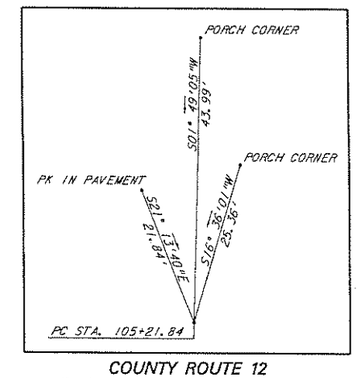

COUNTY ROUTE 12
REF. POINT, PC STA. 105+21.84

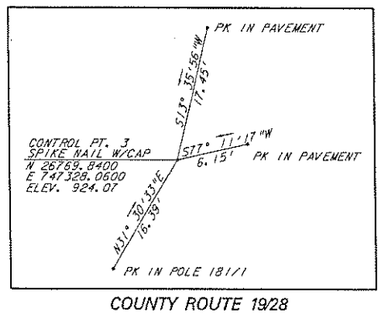

COUNTY ROUTE 19/28
CONTROL PT. 3
STA. 201+49.11, 15.27 LT.

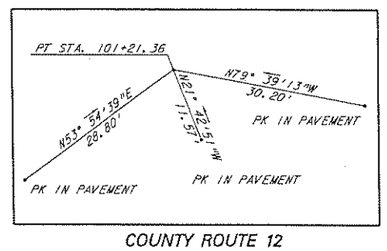

COUNTY ROUTE 12
REF. POINT, PT STA. 101+21.36

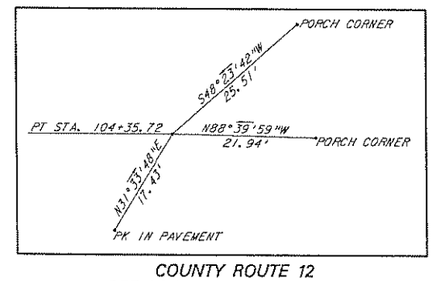

COUNTY ROUTE 12
REF. POINT, PT STA. 104+35.72

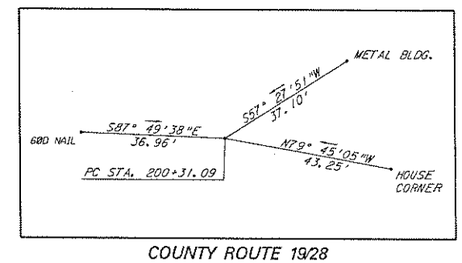

COUNTY ROUTE 19/28
REF. POINT, PC STA. 200+31.09

PREPARED BY
URS

THE WEST VIRGINIA DEPARTMENT OF TRANSPORTATION
DIVISION OF HIGHWAYS

REFERENCE POINTS

01/12/2006 Nester
d:\21534954 (Sect1S1ab)\cad\dgn\rdy_ref_sect1sl ab.dgn

Public Roads Div.	State Dist. No.	State Project No.	Federal Project No.	Fiscal Year	County	Sheet No.	Total Sheets
W.V.	04	S317 -12- 0.89 00	BR-0012 (042)E	2006	HARRISON	15	93

CURVE ①

Δ	34° 55′ 55″ (LT)	STATION		COORDINATES	
Dc	19° 05 55″				
R	300.00′			NORTH	EAST
L	182.90′	PC	98+14.69	26563.6356	746771.3371
T	94.39′	PI	99+09.08	26530.3056	746859.6507
E	14.50′	PT	99+97.59	26533.5492	746951.1379

CURVE ②

Δ	6° 0′ 0″ (LT)	STATION		COORDINATES	
Dc	19°05′ 55″				
R	300.00′			NORTH	EAST
L	31.42′	PC	100+89.95	26576.2908	747040.6492
T	15.72′	PI	101+05.67	26580.1623	747055.8874
E	0.41′	PT	101+21.36	26585.6054	747070.6375

CURVE ③

Δ	18° 34′ 53″ (RT)	STATION		COORDINATES	
Dc	19°05′ 55″				
R	300.00′			NORTH	EAST
L	97.29′	PC	102+38.50	26626.1582	747180.5300
T	49.08′	PI	102+87.58	26643.1487	747266.5720
E	3.99′	PCC	103+35.79	26644.5821	747275.6280

CURVE ④

Δ	70° 52′ 53″ (RT)	STATION		COORDINATES	
Dc	70° 28′ 59″				
R	81.29′			NORTH	EAST
L	99.93′	PCC	103+35.79	26644.5821	747275.6280
T	57.38′	PI	103+93.17	26646.2582	747332.9860
E	18.21′	PT	104+35.72	26592.7793	747353.7745

CURVE ⑤

Δ	41° 22′ 28″ (LT)	STATION		COORDINATES	
Dc	76° 23′ 40″				
R	75.00′			NORTH	EAST
L	54.16′	PC	200+31.09	26656.9884	747340.0994
T	28.32′	PI	200+59.41	26680.5934	747355.7480
E	5.17′	PT	200+85.24	26708.6502	747351.8885

CURVE ⑥

Δ	16° 44′ 12″(RT)	STATION		COORDINATES	
Dc	12° 03′ 44″				
R	475.00′			NORTH	EAST
L	138.75′	PC	10+28.79	26570.2078	747111.2224
T	69.87′	PI	10+98.66	26508.7774	747144.5186
E	5.11′	PT	11+67.54	26440.3609	747158.7140

CURVE ⑦

Δ	19° 03′ 30″ (RT)	STATION		COORDINATES	
Dc	11° 27′ 33″				
R	500.00′			NORTH	EAST
L	166.32′	PC	105+21.84	26512.5100	747384.9771
T	83.93′	PI	106+05.78	26434.2793	747415.3872
E	7.00′	PT	106+88.16	26350.4068	747418.5855

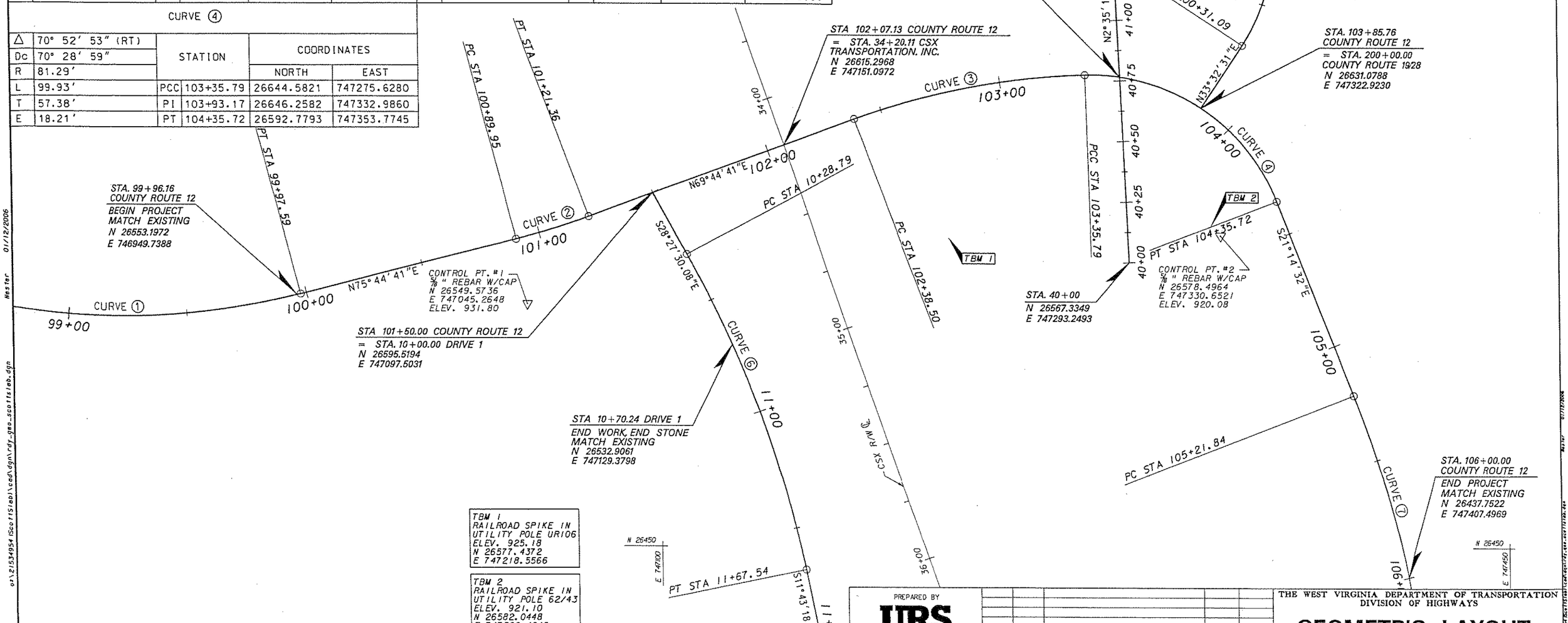

TBM 1
RAILROAD SPIKE IN
UTILITY POLE UR106
ELEV. 925.18
N 26577.4372
E 747218.5566

TBM 2
RAILROAD SPIKE IN
UTILITY POLE 62/43
ELEV. 921.10
N 26582.0448
E 747326.4246

SCALE : 0 20 ft.

PREPARED BY
URS
CHARLESTON, WV

REVISION	SHEET

THE WEST VIRGINIA DEPARTMENT OF TRANSPORTATION
DIVISION OF HIGHWAYS

GEOMETRIC LAYOUT

01/12/2006 Master
a:\21534954\Sco115lab\cad\dgn\rdy_geo_sco115lab.dgn

Public Roads Div.	State Dist. No.	State Project No.	Federal Project No.	Fiscal Year	County	Sheet No.	Total Sheets
W.V.	04	S317 -12- 0.89 00	BR-0012 (042)E	2006	HARRISON	16	93

CURVE ①

PI = 99+09.08
Δ = 34°55'55" LT.
D = 19°05'55"
R = 300.00'
L = 182.90'
T = 94.39'
SE = N/A

CURVE ②

PI = 101+05.67
Δ = 6°00'00" LT.
D = 19°05'55"
R = 300.00'
L = 31.42'
T = 15.72'
SE = 2.00%
V = 30 MPH

CURVE ③

PI = 102+87.58
Δ = 18°34'53" RT.
D = 19°05'55"
R = 300.00'
L = 97.29'
T = 49.08'
SE = 2.00%
V = 30 MPH

CURVE ④

PI = 103+93.17
Δ = 70°25'53" RT.
D = 70°28'59"
R = 81.29'
L = 99.93'
T = 57.38'
SE = 2.00%
V = 15 MPH

CURVE ⑤

PI = 200+59.41
Δ = 41°22'28" LT.
D = 76°23'40"
R = 75.00'
L = 54.16'
T = 28.32'
SE = PER PAVEMENT DETAIL
V = 15 MPH

CURVE ⑥

PI = 10+98.66
Δ = 16°44'11.97" RT.
D = 12°03'44.17"
R = 475.00'
L = 138.75'
T = 69.87'
SE = NC
V = N/A

CURVE ⑦

PI = 106+05.78
Δ = 19°03'30" RT.
D = 11°27'33"
R = 500.00'
L = 166.32'
T = 83.93'
SE = MATCH EXISTING
V = N/A

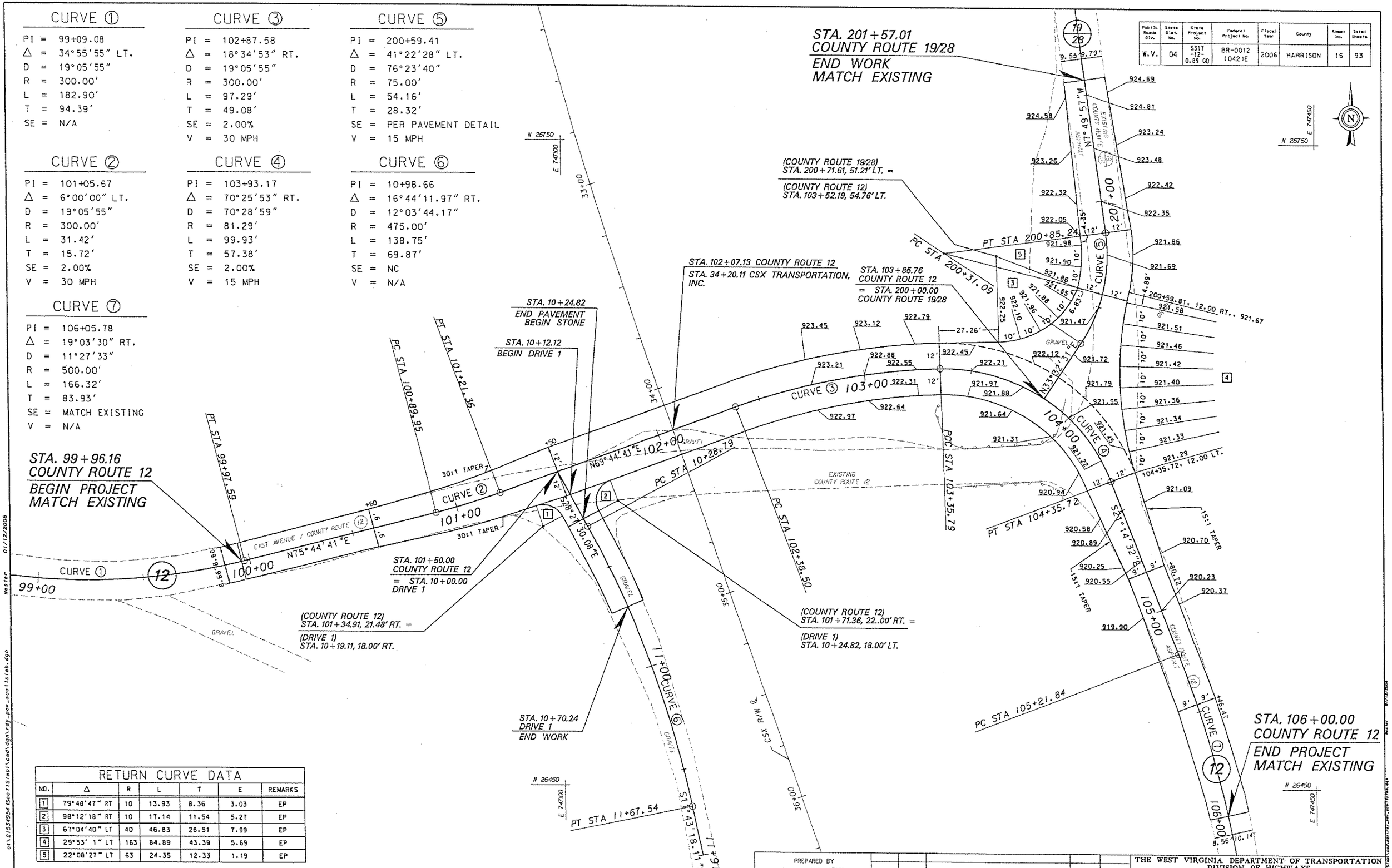

RETURN CURVE DATA

NO.	Δ	R	L	T	E	REMARKS
1	79°48'47" RT	10	13.93	8.36	3.03	EP
2	98°12'18" RT	10	17.14	11.54	5.27	EP
3	67°04'40" LT	40	46.83	26.51	7.99	EP
4	29°53' 1" LT	163	84.89	43.39	5.69	EP
5	22°08'27" LT	63	24.35	12.33	1.19	EP

PREPARED BY
URS
CHARLESTON, WV

THE WEST VIRGINIA DEPARTMENT OF TRANSPORTATION
DIVISION OF HIGHWAYS

PAVEMENT PLAN AND INTERSECTION DETAIL

01/12/2006
Master

Public Roads Div.	State Dist. No.	State Project No.	Federal Project No.	Fiscal Year	County	Sheet No.	Total Sheets
W.V.	04	S317 -12- 0.89 00	BR-0012 (042)E	2006	HARRISON	17	93

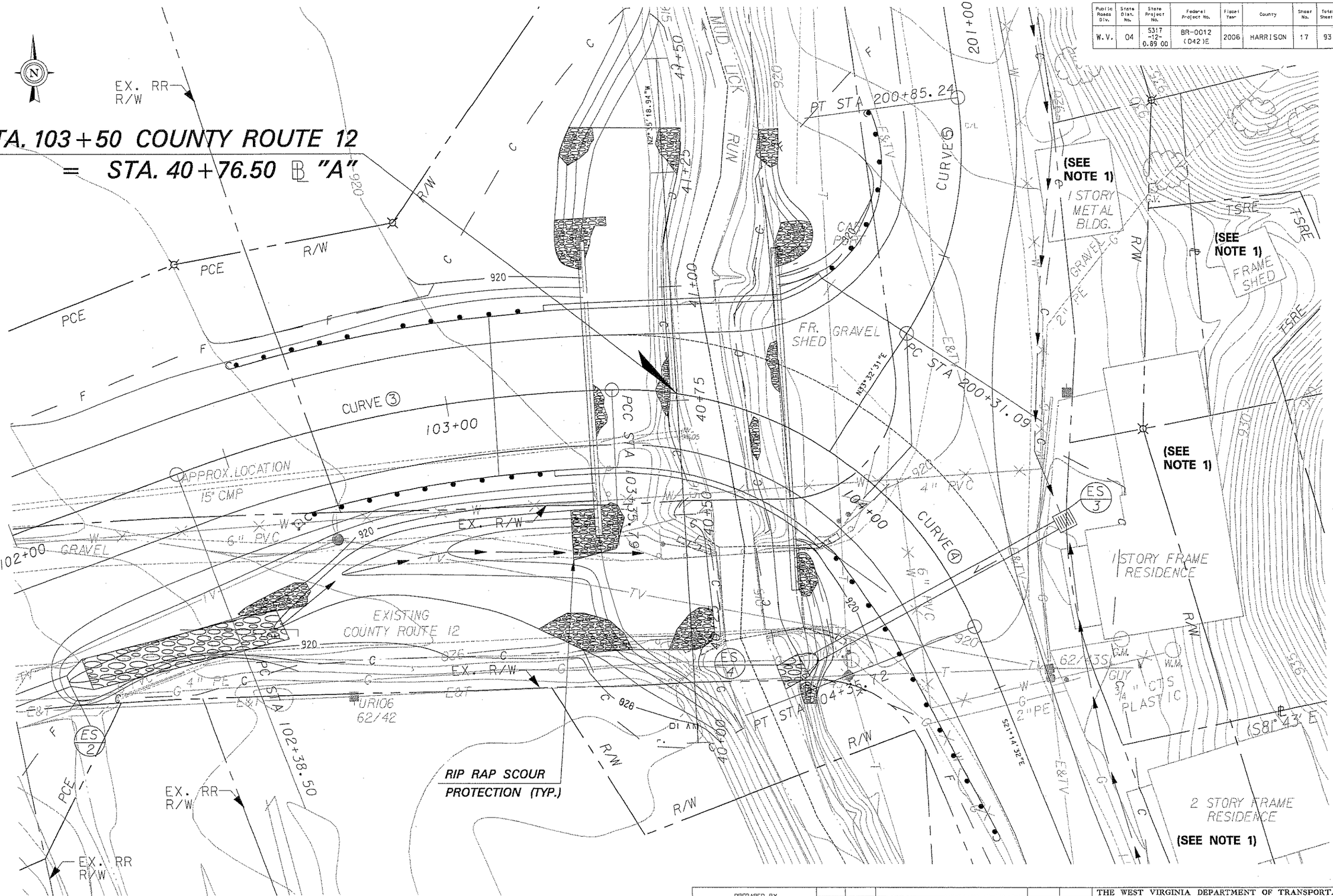

NOTE 1: BUILDINGS HAVE BEEN DEMOLISHED BY OTHERS UNDER SEPARATE CONTRACT.

SCALE : 0 10 ft.

PREPARED BY
URS
CHARLESTON, WV

REVISION NUMBER	SHEET NUMBER	REVISION	DATE	BY

THE WEST VIRGINIA DEPARTMENT OF TRANSPORTATION
DIVISION OF HIGHWAYS

BRIDGE GRADING PLAN

P:\WVDOH SCOTT SLAB BRIDGE\CADD\Structure\PLANS\8-15-07\r-dg-grading_scottslab.dgn 8/17/2007 1:51:12 PM

Public Roads Div.	State Dist. No.	State Project No.	Federal Project No.	Fiscal Year	County	Sheet No.	Total Sheets
W.V.	04	S317 -12- 0.89 00	BR-0012 (042)E	2006	HARRISON	18	93

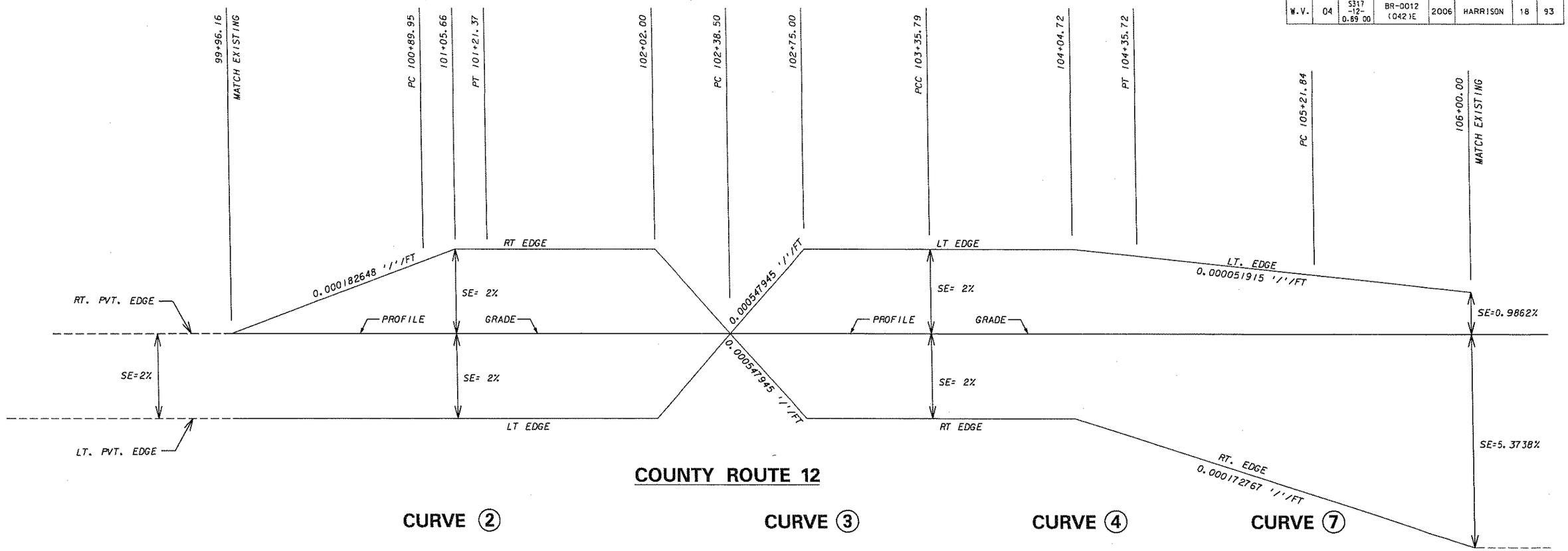

COUNTY ROUTE 12

CURVE ② CURVE ③ CURVE ④ CURVE ⑦

SUPERELEVATION TABLES

CURVE 2

P.I. 101+05.66
P.C. 100+89.94
P.T. 101+21.36

S.E. = 2.0%
S.E. RUNOFF LENGTH = 73.00 FT (OUT)
TANGENT RUNOUT LENGTH = 36.50 FT (OUT)
S.E. RUNOFF LENGTH = 109.50 FT (IN)
TANGENT RUNOUT LENGTH = N/A

Dc = 19° - 05' - 55"
R = 300.00 FT
V = 30 MPH. CURVE LEFT

CURVE 3

P.I. 102+87.57
P.C. 102+38.49
P.C.C. 103+35.79

S.E. = 2.0%
S.E. RUNOFF LENGTH = 73.00 FT
TANGENT RUNOUT LENGTH = 36.50 FT

Dc = 19°- 05'- 55"
R = 300.00 FT
V = 30 MPH. CURVE RIGHT

CURVE 4

P.I. 103+93.17
P.C.C. 103+35.79
P.T. 104+35.71

S.E. = 2.0%
S.E. RUNOFF LENGTH = N/A
TANGENT RUNOUT LENGTH = N/A

Dc = 70° - 28' - 59"
R = 81.29 FT
V = 15 MPH

CURVE 7

P.I. 106+05.78
P.C. 105+21.84
P.T. 106+88.16

S.E. = MATCH EXISTING
S.E. RUNOFF LENGTH = N/A
TANGENT RUNOUT LENGTH = N/A

Dc = 11° - 27' - 33"
R = 500.00 FT
V = N/A

STATION	LEFT LANE - SOUTHBOUND PVMT. EDGE ELEV.	CORR.	WIDTH	RATE	PROFILE GRADE	RIGHT LANE - NORTHBOUND RATE	WIDTH	CORR.	PVMT. EDGE ELEV.	REMARKS
99+96.16	935.21	-0.1732	8.66	-0.0200	935.38	0.0000	8.66	0.0000	935.38	MATCH EXISTING
100+00.00	934.91	-0.1736	8.68	-0.0200	935.09	0.0007	8.68	0.0061	935.09	
100+25.00	933.06	-0.1762	8.81	-0.0200	933.24	0.0053	8.81	0.0464	933.28	
100+50.00	931.31	-0.1790	8.95	-0.0200	931.49	0.0098	8.95	0.0880	931.57	
100+75.00	929.72	-0.1900	9.50	-0.0200	929.91	0.0144	9.50	0.1368	930.05	
100+89.95	928.84	-0.2000	10.00	-0.0200	929.04	0.0171	10.00	0.1713	929.21	PC CURVE 2
101+00.00	928.27	-0.2066	10.33	-0.0200	928.48	0.0190	10.33	0.1959	928.68	
101+05.66	927.98	-0.2104	10.52	-0.0200	928.19	0.0200	10.52	0.2104	928.40	REVERSE CROWN
101+20.66	927.22	-0.2204	11.02	-0.0200	927.45	0.0200	11.02	0.2204	927.67	
101+21.37	927.19	-0.2210	11.05	-0.0200	927.41	0.0200	11.05	0.2210	927.63	PT CURVE 2
101+25.00	927.03	-0.2234	11.17	-0.0200	927.25	0.0200	11.17	0.2234	927.47	
101+50.00	925.93	-0.2400	12.00	-0.0200	926.17	0.0200	12.00	0.2400	926.41	
101+75.00	925.02	-0.2400	12.00	-0.0200	925.26	0.0200	12.00	0.2400	925.50	
101+87.00	924.64	-0.2400	12.00	-0.0200	924.88	0.0200	12.00	0.2400	925.12	
102+00.00	924.28	-0.2400	12.00	-0.0200	924.52	0.0200	12.00	0.2400	924.76	
102+02.00	924.22	-0.2398	12.00	-0.0200	924.46	0.0200	12.00	0.2398	924.70	
102+17.00	923.96	-0.1412	12.00	-0.0118	924.11	0.0118	12.00	0.1412	924.25	
102+25.00	923.86	-0.0887	12.00	-0.0074	923.95	0.0074	12.00	0.0887	924.04	
102+38.50	923.70	0.0000	12.00	0.0000	923.70	0.0000	12.00	0.0000	923.70	PC CURVE 3
102+48.01	923.63	0.0625	12.00	0.0052	923.56	-0.0052	12.00	-0.0625	923.50	
102+50.00	923.61	0.0755	12.00	0.0063	923.54	-0.0063	12.00	-0.0755	923.46	
102+60.00	923.55	0.1412	12.00	0.0118	923.40	-0.0118	12.00	-0.1412	923.26	
102+75.00	923.45	0.2398	12.00	0.0200	923.21	-0.0200	12.00	-0.2398	922.97	REVERSE CROWN

STATION	LEFT LANE - SOUTHBOUND PVMT. EDGE ELEV.	CORR.	WIDTH	RATE	PROFILE GRADE	RIGHT LANE - NORTHBOUND RATE	WIDTH	CORR.	PVMT. EDGE ELEV.	REMARKS
102+90.00	923.25	0.2400	12.00	0.0200	923.01	-0.0200	12.00	-0.2400	922.77	
103+00.00	923.12	0.2400	12.00	0.0200	922.88	-0.0200	12.00	-0.2400	922.64	
103+25.00	922.79	0.2400	12.00	0.0200	922.55	-0.0200	12.00	-0.2400	922.31	
103+35.79	922.64	0.2400	12.00	0.0200	922.40	-0.0200	12.00	-0.2400	922.16	PCC CURVE 4
103+50.00	922.45	0.2400	12.00	0.0200	922.21	-0.0200	12.00	-0.2400	921.97	
103+75.00	922.12	0.2400	12.00	0.0200	921.88	-0.0200	12.00	-0.2400	921.64	
103+85.76	921.97	0.2400	12.00	0.0200	921.73	-0.0200	12.00	-0.2400	921.49	
103+89.72	921.92	0.2400	12.00	0.0200	921.68	-0.0200	12.00	-0.2400	921.44	
104+00.00	921.79	0.2400	12.00	0.0200	921.55	-0.0200	12.00	-0.2400	921.31	
104+04.72	921.72	0.2400	12.00	0.0200	921.48	-0.0200	12.00	-0.2400	921.24	REVERSE CROWN
104+19.72	921.51	0.2307	12.00	0.0192	921.28	-0.0226	12.00	-0.2711	921.01	
104+25.00	921.45	0.2274	12.00	0.0189	921.22	-0.0235	12.00	-0.2820	920.94	
104+35.72	921.29	0.2207	12.00	0.0184	921.07	-0.0254	12.00	-0.3043	920.76	PT CURVE 4
104+50.00	921.09	0.1950	11.05	0.0176	920.89	-0.0278	11.05	-0.3074	920.58	
104+75.00	920.70	0.1534	9.38	0.0164	920.55	-0.0321	9.38	-0.3015	920.25	
104+81.94	920.60	0.1439	9.00	0.0160	920.45	-0.0333	9.00	-0.3001	920.15	
104+96.94	920.39	0.1369	9.00	0.0152	920.25	-0.0359	9.00	-0.3234	919.93	
105+00.00	920.37	0.1355	9.00	0.0151	920.23	-0.0365	9.00	-0.3282	919.90	
105+11.94	920.23	0.1299	9.00	0.0144	920.10	-0.0385	9.00	-0.3467	919.75	
105+25.00	920.00	0.1238	9.00	0.0138	919.88	-0.0408	9.00	-0.3670	919.51	
105+50.00	920.07	0.1121	9.00	0.0125	919.96	-0.0451	9.00	-0.4059	919.55	
105+75.00	920.15	0.0980	8.78	0.0112	920.05	-0.0494	9.57	-0.4729	919.58	
106+00.00	920.38	0.0844	8.56	0.0099	920.30	-0.0537	10.14	-0.5449	919.75	MATCH EXISTING

PREPARED BY
URS
CHARLESTON, WV

REVISION NUMBER	SHEET NUMBER	REVISION	DATE	BY

THE WEST VIRGINIA DEPARTMENT OF TRANSPORTATION
DIVISION OF HIGHWAYS

SUPERELEVATION TABLES & DIAGRAMS

P:\WYDOH SCOTT SLAB BRIDGE\CADD\Structure\PLANS\8-15-07\r-dg_sup_scottslab019_27_2005i.dgn 8/15/2007 1:16:22 PM

Public Roads Div.	State Dist. No.	State Project No.	Federal Project No.	Fiscal Year	County	Sheet No.	Total Sheets
W.V.	04	S317 -12- 0.89 00	BR-0012 (042)E	2006	HARRISON	19	93

MAINTENANCE OF TRAFFIC GENERAL NOTES:

1. MAINTENANCE OF TRAFFIC SHALL BE IN ACCORDANCE WITH SECTION 636 OF THE WEST VIRGINIA DEPARTMENT OF TRANSPORTATION, DIVISION OF HIGHWAYS, STANDARD SPECIFICATIONS ROADS AND BRIDGES, ADOPTED 2000 AS AMENDED BY THE WEST VIRGINIA DEPARTMENT OF TRANSPORTATION, DIVISION OF HIGHWAYS, SUPPLEMENTAL SPECIFICATIONS, DATED JANURARY 1, 2003, THE CONTRACT DOCUMENTS AND THE CONTRACT PLANS ARE THE GOVERNING PROVISIONS APPLICABLE TO THIS PROJECT, AND THE MANUAL "TRAFFIC CONTROL FOR STREET AND HIGHWAY CONSTRUCTION AND MAINTENANCE OPERATIONS," DATED NOVEMBER 1994 WHICH IS MADE A PART OF THIS CONTRACT AND THE TRAFFIC PLAN FOR THE INDIVIDUAL SEGMENTS AS DESCRIBED BELOW.

2. REFLECTIVE SHEETING ON TEMPORARY TRAFFIC CONTROL DEVICES SHALL BE OF NEW CONDITION AT THE BEGINNING OF THE PROJECT LIFE. NIGHT VISIBILITY AND LEGIBILITY SHALL BE MAINTAINED.

3. ACCESS TO ALL HOUSES AND BUSINESSES SHALL BE MAINTAINED AT ALL TIMES.

4. TEMPORARY TAPE: ANY TEMPORARY TAPE SHALL BE MECHANICALLY APPLIED. SOLID LINES SHALL HAVE A 2 INCH GAP EVERY 50 FEET.

5. THE CONTRACTOR SHALL TEMPORARILY COVER SIGNS AS APPROPRIATE IN ORDER TO CONTINUE THE INTEGRITY OF THE VARIOUS PHASES OF THE TRAFFIC CONTROL PLAN. WHEN COVERING SIGNS THE CONTRACTOR HAS THE OPTION OF USING:
   A. HEAVY DUTY BLACK OVERLAY OR BURLAP BAGS
   B. THIN WOOD OVERLAY (E.G., PLYWOOD)
   C. TAKING SIGNS DOWN AND REINSTALLING WHEN APPROPRIATE
   D. ANY DAMAGES CAUSED BY THE ABOVE NAMED SHALL BE REPAIRED/ REPLACED TO ORIGINAL CONDITION AT CONTRACOR'S EXPENSE.
   E. ALL ABOVE OPERATIONS SHALL BE BID AS PART OF ITEM 636011-001.

6. WHEN WORK IS PERFORMED AT NIGHT WITH A FLAGGER, THE FLAGGER STATIONS SHALL BE ADEQUATELY ILLUMINATED. THE COST OF THE FLAGGER SHALL BE PAID FOR AS PART OF ITEM 636014-001.

7. EXISTING SIGNS AND DELINEATORS NOTE: ANY SUCH EXISTING FACILITIES REMOVED OR DAMAGED BY THE CONTRACTOR SHALL BE REPLACED TO ITS ORIGINAL CONDITION BY THE CONTRACTOR AT HIS EXPENSE AS PART OF ITEM 636011-001, UNLESS REPLACED BY FINAL SIGNING.

8. WINTER SHUTDOWN: THE PROJECT AREA AND ATTENDANT ROADWAY (TRAVEL LANES AND SHOULDERS, ETC.) SHALL BE LEFT IN A "SQUARED-OFF"/EASILY TRAVERSABLE, SAFE CONDITION THAT IS PREAGREED TO BY THE ENGINEER AND BE MAINTAINED BY THE CONTRACTOR AT ALL TIMES. SUCH WILL INCLUDE, BUT NOT BE LIMITED TO, PAVEMENT MARKINGS (TEMPORARY PAVEMENT MARKINGS), SIGNING, RIDEABLE PAVEMENT, AND AS NECESSARY GUARDRAIL BARRIER, ETC., AS NOTED ON THE PLANS AND AS APPROPRIATE. TRAFFIC CONTROL DEVICES THAT ARE NOT NEEDED OR DESIRED SHALL BE EITHER REMOVED OR COVERED AND ALL SUCH SHALL BE BID INCIDENTAL TO ITEM 636011-001. SNOW REMOVAL AND ICE CONTROL (SR & IC) FOR ACTIVE ROADWAYS IN THE PROJECT WILL BE ACCOMPLISHED BY THE WV DOH.

9. TWO WAY TRAFFIC SHALL BE MAINTAINED AT ALL TIMES. ACCESS TO ALL HOUSES AND BUSINESSES SHALL BE MAINTAINED AT ALL TIMES. THERE SHALL BE NO MORE THAN ONE LIFT DIFFERENCE IN ELEVATION (TWO INCHES PLUS OR MINUS) BETWEEN ADJACENT LANES.

10. THE MAINTENANCE OF TRAFFIC SCHEME (PHASING) LISTED HEREIN IS ONLY A RECOMMENDATION. SHOULD THE CONTRACTOR DESIRE TO ADOPT ALTERNATIVE PHASING, OR TO COMBINE PHASES, THE CONTRACTOR SHALL SUBMIT THE ALTERNATIVE SCHEME TO THE ENGINEER FOR REVIEW AND APPROVAL AT LEAST 14 DAYS PRIOR TO THE COMMENCEMENT OF WORK IN THE AFFECTED AREA.

11. THE CONTRACTOR SHALL MAINTAIN WORKING STORM DRAINAGE SYSTEMS THROUGH THE WORK AREAS AT ALL TIMES DURING CONSTRUCTION. THE WORKING SYSTEM MAY CONSIST OF THE EXISTING STORM DRAINAGE SYSTEM, THE PROPOSED STORM DRAINAGE SYSTEM, OR A COMBINATION THEREOF. DRAINAGE PIPES FOR THE PROPOSED SYSTEMS SHALL BE CONSTRUCTED IN SECTION LENGTHS NECESSARY TO MAINTAIN THE LANES OF TRAFFIC INDICATED IN THE MAINTENANCE OF TRAFFIC PLANS.

12. THE CONTRACTOR MUST RESTORE ANY PAVED, LANDSCAPED, CURBED, AND SIDEWALK AREAS DISTURBED DURING CONSTRUCTION ACTIVITIES TO ITS ORIGINAL CONDITION AND TO THE SATISFACTION OF THE ENGINEER.

13. WORK IN ANY ONE AREA MAY BE COMBINED WITH ANOTHER OPERATION IN THE SAME AREA, OR WITH ANOTHER AREA TO UTILIZE MORE EFFICIENTLY THE EXCAVATED AND EMBANKMENT MATERIAL PROVIDING THE COMBINED OPERATION DOES NOT CAUSE UNDUE DELAY TO TRAFFIC. RESERVING AND REHANDLING OF ANY UNCLASSIFIED EXCAVATED MATERIAL AS A RESULT OF THE MAINTENANCE OF TRAFFIC PLAN AS SHOWN, OR NECESSITATED ON THE PROJECT DURING CONSTRUCTION SHALL BE AT THE CONTRACTORS EXPENSE.

14. NO SEPARATE MEASUREMENT OR PAYMENT SHALL BE MADE FOR THE REMOVAL OF TEMPORARY ROADS AND DETOURS, BUT THE COST IS TO BE INCIDENTAL TO ITEM 207001-001. GRADE SITE TO DRAIN, SEED AND MULCH ALL DISTURBED AREAS AFTER REMOVAL OF DETOUR.

15. TRAFFIC CONTROL DEVICES
   A. LOCATION OF ALL TRAFFIC CONTROL DEVICES SHOWN ON THE MAINTENANCE OF TRAFFIC PLANS ARE APPROXIMATE. FINAL LOCATION OF THE TRAFFIC CONTROL DEVICES ARE TO BE ESTABLISHED BY THE ENGINEER IN THE FIELD.
   B. FLAGGER: WHEN WORK IS PERFORMED AT NIGHT WITH A FLAGGER, THE FLAGGER STATIONS SHALL BE ADEQUATELY ILLUMINATED. THIS COST SHALL BE PAID FOR AS PART OF ITEM 636014-001
   C. ALL TEMPORARY CONCRETE BARRIERS (TCB) SHALL HAVE TYPE B-1 DELINEATORS (WHITE OR YELLOW AS APPROPRIATE) FACING TRAFFIC AT 20 FT. CENTERS. THE COST OF PROVIDING AND INSTALLING THE DELINEATORS SHALL BE INCIDENTAL TO ITEM 636017-001.

16. ALL TEMPORARY IMPACT ATTENUATORS SHALL BE TYPE VIII, 2'-0" WIDE, 6-BAY, BIDIRECTIONAL WITH APPROPRIATE BACKUP PER THE MANUFACTURER'S RECOMMENDATIONS. ANY TEMPORARY IMPACT ATTENUATOR SUFFERING FROM DAMAGE SHALL BE REPAIRED OR REPLACED AS APPROPRIATE WITHIN 24 HOURS. SUCH OPERATIONS TO INCLUDE ALL REPAIR PARTS NECESSARY AND COST SHALL BE PAID INCIDENTAL TO ITEM 664001-016. NOTE: ANY NEW DEVICE PURCHASED SHALL BE TYPE VIII, OR OTHER APPROVED DEVICE (SEE APPROVED PRODUCTS LIST).

MAINTENANCE OF TRAFFIC SUMMARY

ITEM NO.	DESCRIPTION	QUANTITY	
		UNIT	TOTAL
636002-001	AGGREGATE FOR MAINTAINING TRAFFIC, STONE OR GRAVEL	TN	-
636007-001	ERADICATION OF PAVEMENT MARKING	LF	-
636008-001	TEMPORARY PAVEMENT MARKING-PAINT 4 IN SOLID LINE	LF	1450
636011-001	TRAFFIC CONTROL DEVICE	UN	5080
636012-010	PROJECT TRAFFIC CONTROL DEVICE CLEANING	EA	2
636013-001	INDIVIDUAL TRAFFIC CONTROL DEVICE CLEANING	EA	50
636014-001	FLAGGER	HR	600
636014-002	TRAFFIC DIRECTOR	HR	-
636017-001	TEMPORARY CONCRETE BARRIER	LF	150
636017-002	DOH FURNISHED TEMPORARY CONCRETE BARRIER	LF	-
636018-001	REMOVE & RESET TEMPORARY CONCRETE BARRIER	LF	100
636018-002	REMOVE & RESET DOH FURNISHED TEMP. CONCRETE BARRIER	LF	-
636025-001	WARNING LIGHTS, TYPE B	DAY	1080
664001-009	REMOVE AND RESET GREAT ATTENUATOR DEVICE	EA	1
664001-016	IMPACT ATTENUATING DEVICE, TYPE VIII	EA	2

TRAFFIC CONTROL DEVICE QUANTITIES

DEVICE	DESCRIPTION	VALUE IN UNITS	QUANTITIES	TOTAL UNITS
* 1	SIGNS ON PORTABLE MOUNTS AND BARRICADES. (TOTAL SIGN AREA 16 SQ. FT OR GREATER)	170	-	-
* 2	SIGNS ON PORTABLE MOUNTS AND BARRICADES. (TOTAL SIGN AREA LESS THAN 16 SQ. FT)	80	4	320
** 3	SIGNS ON PERMANENT POSTS (TOTAL SIGN AREA 16 SQ. FT OR GREATER)	180	8	1440
** 4	SIGNS ON PERMANENT POSTS (TOTAL SIGN AREA LESS THAN 16 SQ. FT)	90	3	270
** 7	BARRICADES TYPE III	90	-	-
** 8	DRUMS	60	50	3000
9	CONES	5	10	50
10	VERTICAL PANELS OR GROUND INTO DELINEATORS	10	-	-
11	BARRIER OR GUARDARAIL MOUNTED DELINEATORS	0	15	0
		TOTAL		5080

* ORANGE SIGN SHEETING TO BE REFLECTIVE FLOURESENT ORANGE - TYPE V

** BARRICADES AND DRUM SHEETING TO BE 6 INCH FLEXIBLE HIGH INTENSITY - TYPE IV

MT-1

PREPARED BY
URS
CHARLESTON, WV

REVISION NUMBER	SHEET NUMBER	REVISION	DATE	BY

THE WEST VIRGINIA DEPARTMENT OF TRANSPORTATION
DIVISION OF HIGHWAYS

MAINTENANCE OF TRAFFIC
GENERAL NOTES AND QUANTITIES

P:\WVDOH SCOTT SLAB BRIDGE\CADD\Structure\PLANS\8-15-07\19 of 93\rf_gns_scottslab019_27_2009.dgn 9/11/2007
10:02:59 AM
J06C29C98-PLAN #

Public Roads Div.	State Dist. No.	State Project No.	Federal Project No.	Fiscal Year	County	Sheet No.	Total Sheets
W.V.	04	S317 -12- 0.89 00	BR-0012 (042)E	2006	HARRISON	20	93

GENERAL NOTES

SEQUENCE OF CONSTRUCTION

PHASE 1A

1. INSTALL TCB & TIA ON THE NORTH SIDE OF COUNTY ROUTE 12, AND WEST SIDE OF COUNTY ROUTE 19/28, AND TEMPORARY SHORING, AS SHOWN ON DETAIL A.
2. WHILE MAINTAINING TRAFFIC ON THE EXISTING BRIDGE AND EXISTING CR12, CONSTRUCT ABUT. 1 IN ITS ENTIRITY AND ABUT. 2 TO THE CONSTRUCTION JOINT AS SHOWN ON DETAIL A.
3. UTILIZING CASES A3, A4, AND/OR A6, CONSTRUCT RELOCATED CR12 FROM STATION 101+00 TO STATION 104+00 IN ITS ENTIRETY AND A PORTION OF THE RETURN TO COUNTY ROUTE 19/28, AS SHOWN IN DETAIL A, BUT EXCLUDING THE ASPHALT WEARING COURSE.
4. REMOVE & RESET TCB & TIA AS SHOWN ON DETAIL B.

PHASE 1B

1. UTILIZING CASES A3, A4, AND/OR A6, FLAGGERS, AND ONE LANE AT A TIME, ONE LIFT AT A TIME CONSTRUCTION, CONSTRUCT COUNTY ROUTE 12 FROM STATION 99+96.16 TO STATION 102+10, INCLUDING THE DRIVEWAY RIGHT OF STATION 101+50, IN ITS ENTIRETY, BUT EXCLUDING THE ASPHALT WEARING COURSE.
2. UTILIZING CASE A5, A6 & A9 AND FLAGGER, AND ONE LANE AT A TIME, ONE LIFT AT A TIME CONSTRUCTION, CONSTRUCT COUNTY ROUTE 12 FROM STATION 104+00 TO STATION 106+00 AND CR19/28 FROM STATION 200+12 TO STATION 201+57.01 IN ITS ENTIRETY BUT EXCLUDING THE ASPHALT WEARING COURSE.

PHASE 1C

1. DIVERT TRAFFIC ONTO RELOCATED CR12 AND THE NEWLY CONSTRUCTED BRIDGE.
2. DEMOLISH THE EXISTING BRIDGE AND REMOVE THE EXISTING PAVEMENT AS SHOWN ON THE PLAN.
3. COMPLETE CONSTRUCTION OF WINGWALL D AS SHOWN ON DETAIL B.
4. AFTER COMPLETION OF WINGWALL D, BACKFILL THE AREA TO ITS FINAL GRADE AND REMOVE THE TCB AND TIA AS SHOWN ON DETAIL B.

PHASE 1D

1. CONSTRUCT THE ASPHALT WEARING COURSE IN ITS ENTIRETY UNDER TRAFFIC UTILIZING CASES A3, A4, AND/OR A6.
2. INSTALL PERMANENT PAVEMENT MARKINGS AND PERMANENT SIGNS.
3. SEED AND MULCH ENTIRE AREA.

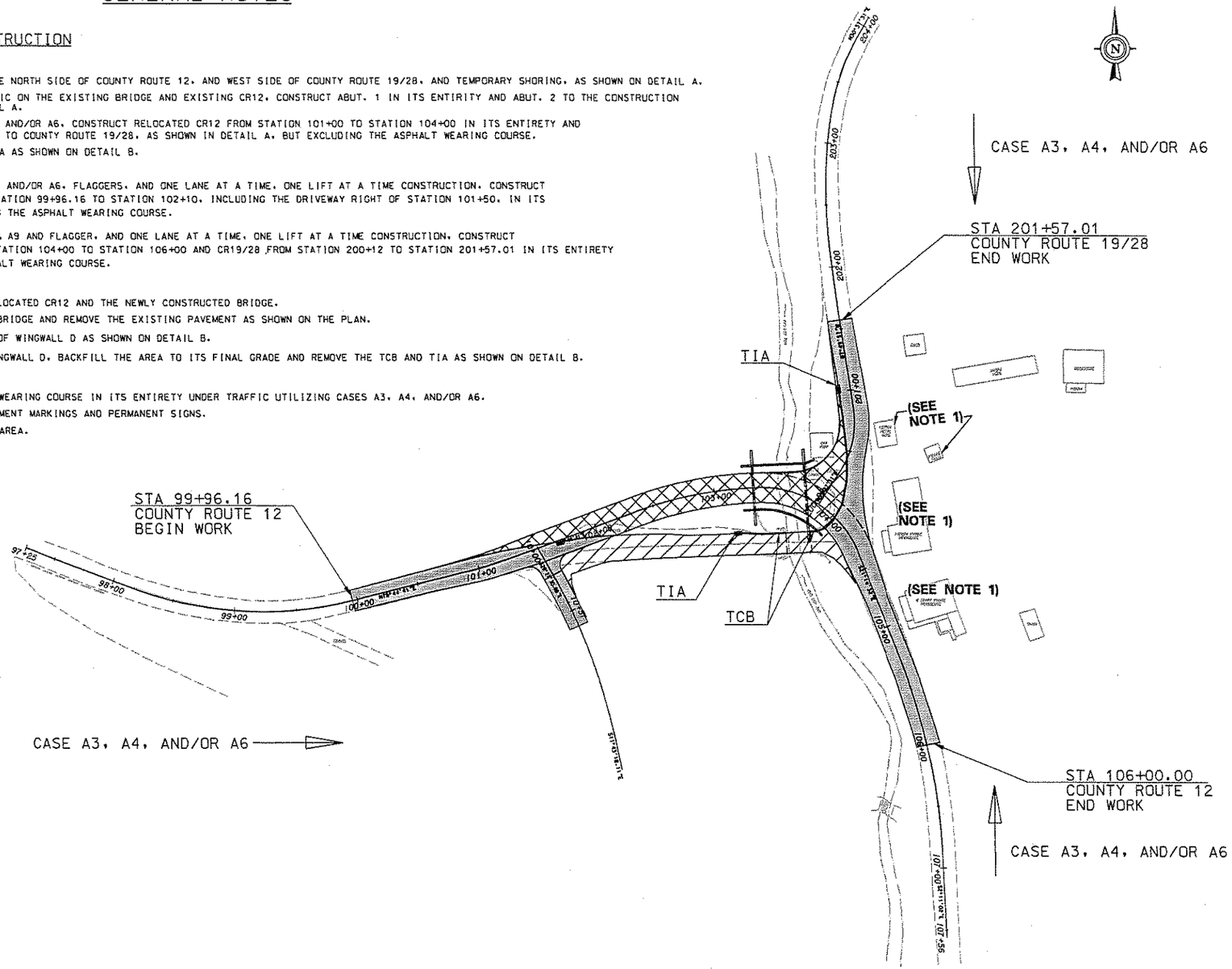

NOTE 1: BUILDINGS HAVE BEEN DEMOLISHED BY OTHERS UNDER SEPARATE CONTRACT.

SCALE : 0 50 ft.

MT-2

PREPARED BY
URS
CHARLESTON, WV

REVISION NUMBER	SHEET NUMBER	REVISION	DATE	BY

THE WEST VIRGINIA DEPARTMENT OF TRANSPORTATION
DIVISION OF HIGHWAYS

MOT PLAN

P:\WVDOH SCOTT SLAB BRIDGE\CADD\Structure\PLANS\8-15-07\20 of 93\trf_top_scottslab0119.27.2005).dgn 8/17/2007 1:17:09 PM

Public Roads Div.	State Dist. No.	State Project No.	Federal Project No.	Fiscal Year	County	Sheet No.	Total Sheets
W.V.	04	S317 -12- 0.89 00	BR-0012 (042)E	2006	HARRISON	21	93

DETAIL A PHASING

1. INSTALL TEMPORARY SHORING & TCB AS SHOWN.
2. EXCAVATE TO BOTTOM OF FOOTING AS SHOWN.
3. CONSTRUCT FOOTING AND ABUTMENT TO THE CJ. CONSTRUCT BRIDGE SUPERSTRUCTURE.
4. INSTALL TEMPORARY SHORING AS SHOWN ON DETAIL B AND BACKFILL AREA BEHIND TEMPORARY SHORING.
5. CONSTRUCT APPROACH SLAB TO CJ.

DETAIL B PHASING

1. REMOVE TEMPORARY SHORING AS SHOWN IN DETAIL A AND REMOVE & RESET TCB AS SHOWN IN DETAIL B.
2. DISMANTLE EXISTING BRIDGE.
3. COMPLETE CONSTRUCTION OF WINGWALL D.
4. REMOVE TEMPORARY SHORING AS SHOWN IN DETAIL B AND COMPLETE BACKFILL OF AREA.
5. COMPLETE CONSTRUCTION OF APPROACH SLAB.
6. ALL SHORING COSTS TO BE INCIDENTAL TO ITEM 212001-000, STRUCTURE EXCAVATION.
7. SHORING TO BE DESIGNED BY A WV PROFESSIONAL ENGINEER AND SUBMITTED FOR COMMENT PRIOR TO INSTALLATION.

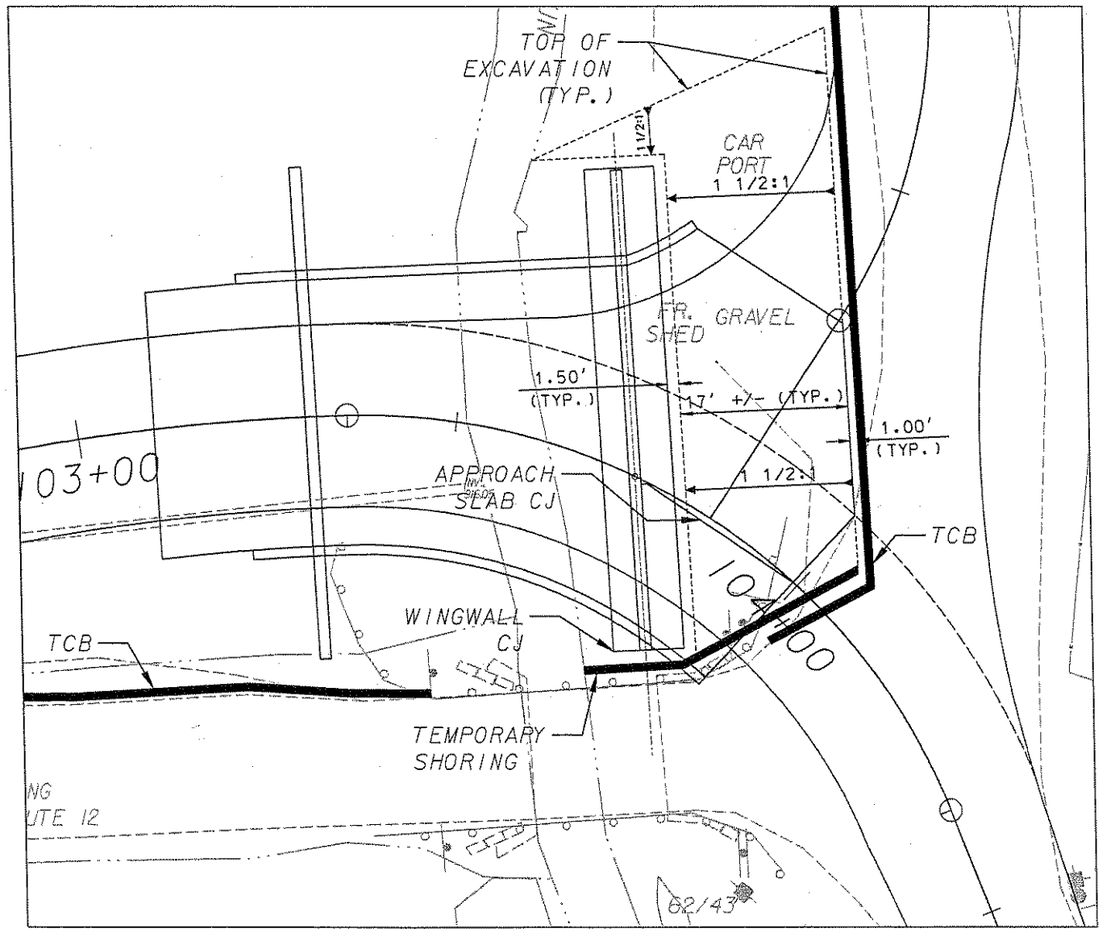

DETAIL A

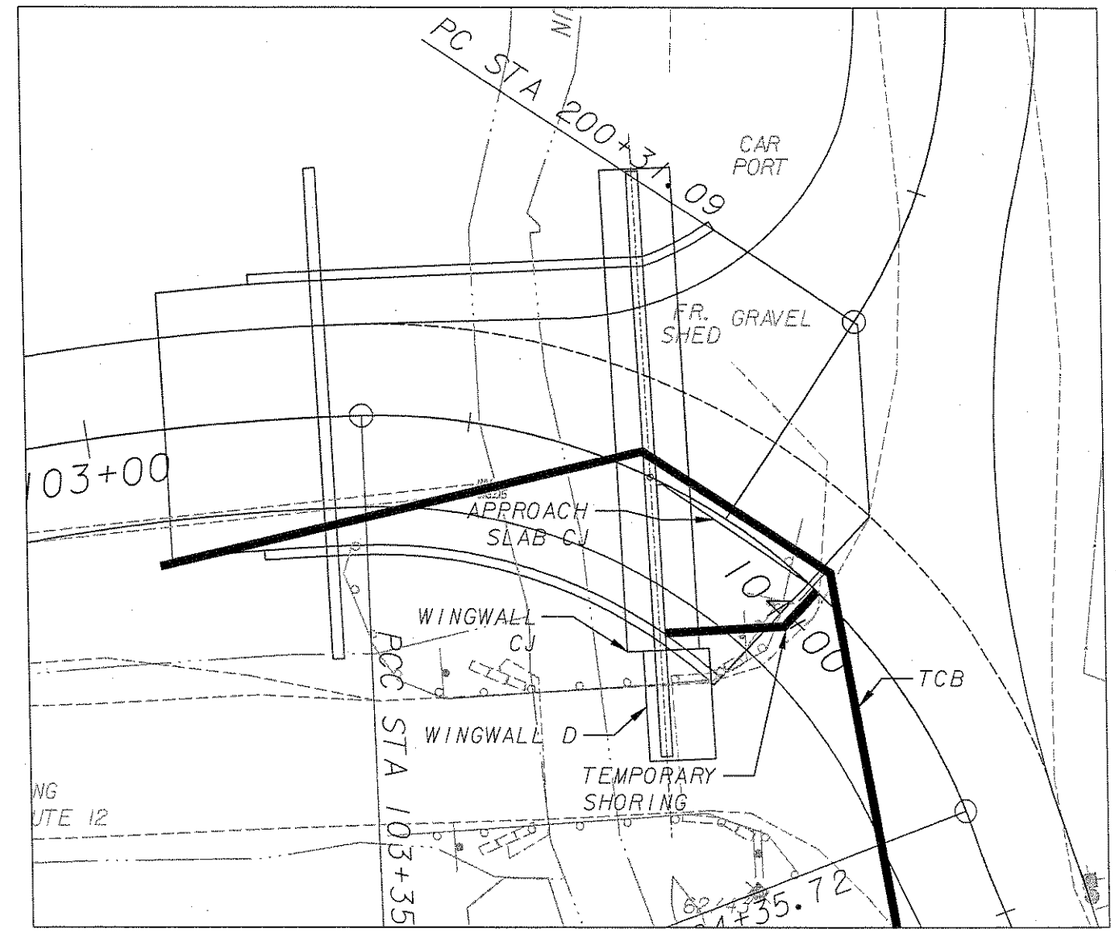

DETAIL B

SCALE : ft 0 10 ft.

PREPARED BY
URS
CHARLESTON, WV

REVISION NUMBER	SHEET NUMBER	REVISION	DATE	BY

THE WEST VIRGINIA DEPARTMENT OF TRANSPORTATION
DIVISION OF HIGHWAYS

MOT PLAN

P:\WVDOH SCOTT SLAB BRIDGE\CADD\Structure\PLANS\8-15-07\(21 of 93)trf_tcp_scottslab02(9.27.2005).dgn 8/17/2007 1:18:43 PM

Public Roads Div.	State Dist. No.	State Project No.	Federal Project No.	Fiscal Year	County	Sheet No.	Total Sheets
W.V.	04	S317 -12- 0.89 00	BR-0012 (042)E	2006	HARRISON	22	93

PARCEL NO.	TRACT NO.	PLAN SHEET NO.	TITLEHOLDER	RECORDED DEED BOOK	RECORDED PAGE NO.	AREA - Sq. Ft. (Unless noted otherwise) C/A	NON-C/A	EASEMENT TYPE	EASEMENT AREA	REMAINING LEFT	REMAINING RIGHT	REMAINING TOTAL	TOTAL TAKEN	PARCEL TOTAL	REMARKS	R/W DEED RECORD DEED BOOK	R/W DEED RECORD PAGE NO.
1-1		27	Linda O. Colliere	1351	177		2,932			1.63Ac.		1.63Ac.	2,932	1.70 Ac.	(Tract 2) Deed Area - 2.34Ac.		
							(0.07Ac.)						(0.07Ac.)		less outsales of 0.47 & 0.17 Ac.		
1-2		27	Linda O. Colliere	1351	177		13,047			2.60Ac.		2.60Ac.	13,047	2.90Ac.(c)	(Tracts 1&3)		
							(0.30Ac.)						(0.30Ac.)		(Deed Area - 3.53 Ac.)		
2	1	27	CSX Transportation, Inc.	1221	295			PCE	3,796	*	*	*	4,181	*	* Unable to calculate		
	2							PCE	385								
~~3~~		27	~~Terry W. Arbogast~~	1348	480										No Take		
4		27	William Lee Richards &	1059	177		2,839				17,636	17,636	2,839	20,475(c)	Deed - 0.45 Ac.		
			Betty Lou Richards														
5		27	Marion Docks, Inc.	1319	447		1,102				35.37Ac.	35.37Ac.	1,102	35.40Ac.(c)	Deed Area Less Parcel 5-1		
							(0.03Ac.)						(0.03Ac.)		And Outsales		
5-1		27	Marion Docks, Inc.	1340	918		1,570				1.27 Ac.	1.27 Ac.	1,570	1.31 Ac.			
				1319	447		(0.04Ac.)						(0.04Ac.)				
6	1	27	Karen D. Sears	1154	927		1,247				15,043	15,043	1,247	16,290(c)	(Parcel B)		
	2	27						TSRE	1,098								
7			Deleted												Combined w/Parcel 6		
8	1	27	Patsy P. Martin &	1167	265		2,812			10,417		10,417	2,812	13,229(c)	No Septic Tank - Lines Only,		
	2		Billie Martin					TSRE	2,695						Location Unknown		
9	1	27	Mary Lou Martin,	WB 146	1		1,390			4,167		4,167	1,390	5,557(c)	No Septic Tank - Lines Only,		
	2	27	Joe Nagy, Jr. &	800	517			TSRE	1,937						Location Unknown		
			Joe Waddy (Life Estate)														
10	1	27	Public Land Corporation					PE	1,046				1,236		Mud Lick Run		
	2							PE	190								
11		27	Cebridge Connections												TV Cable		
12		27	Marion Docks, Inc.	1340	918		798			2,954		2,954	798	3,752(c)	Some Title Holder as 5 & 5-1		

UTILITIES

STATION	SHEET NO	DESCRIPTION	DISPOSITION
ALLEGHENY POWER SYSTEMS (ELECTRIC)			
RELOCATED C.R. 12 100+00 RT. TO 104+25 RT.	27	OVERHEAD ELECTRIC LINES	TO BE RELOCATED BY OWNER
104+25 LT. TO 106+00 RT.	27	OVERHEAD ELECTRIC LINES	TO BE RELOCATED BY OWNER
RELOCATED C.R. 19/28 200+00 RT. TO 201+40 LT.	27	OVERHEAD ELECTRIC LINES	TO BE RELOCATED BY OWNER
VERIZON WV, INC (TELEPHONE)			
RELOCATED C.R. 12 100+00 RT. TO 104+25 RT.	27	OVERHEAD ELECTRIC LINES	TO BE RELOCATED BY OWNER
104+25 RT. TO 106+00 RT.	27	OVERHEAD ELECTRIC LINES	TO REMAIN IN PLACE
RELOCATED C.R. 19/28 200+00 RT. TO 201+40 LT.	27	OVERHEAD ELECTRIC LINES	TO BE RELOCATED BY OWNER
CITY OF SHINNSTON (WATER)			
RELOCATED C.R. 12 101+00 LT. TO 106+00 RT.	27	6" PVC WATERLINE	TO BE RELOCATED BY HIGHWAY CONTRACTOR
RELOCATED C.R. 19/28 200+00 RT. TO 201+50 RT.	27	6" PVC WATERLINE	TO BE RELOCATED BY HIGHWAY CONTRACTOR
LUMBERPORT-SHINNSTON GAS CO. (GAS)			
RELOCATED C.R. 12 100+00 RT. TO 106+00 RT.	27	4" PE GASLINE	TO BE RELOCATED BY OWNER
104+00 LT. TO 104+60 LT.	27	4" PE GASLINE	TO BE RELOCATED BY OWNER

REVISION NO.	SHEET NO.	REVISION	DATE	BY

PREPARED BY
URS
CHARLESTON, WV

WEST VIRGINIA
DEPARTMENT OF TRANSPORTATION
DIVISION OF HIGHWAYS

OWNERSHIP AND UTILITY INDEX

P:\WVDOH SCOTT SLAB BRIDGE\CADD\Structure\PLANS\8-15-07\rdy_own_scottslab8019.27.2005i.dgn 8/16/2007 1:26:13 PM
J06C29C06-OWNER

Public Roads Div.	State Dist. No.	State Project No.	Federal Project No.	Fiscal Year	County	Sheet No.	Total Sheets
W.V.	04	S317 -12- 0.89 00	BR-0012 (042)E	2006	HARRISON	23	93

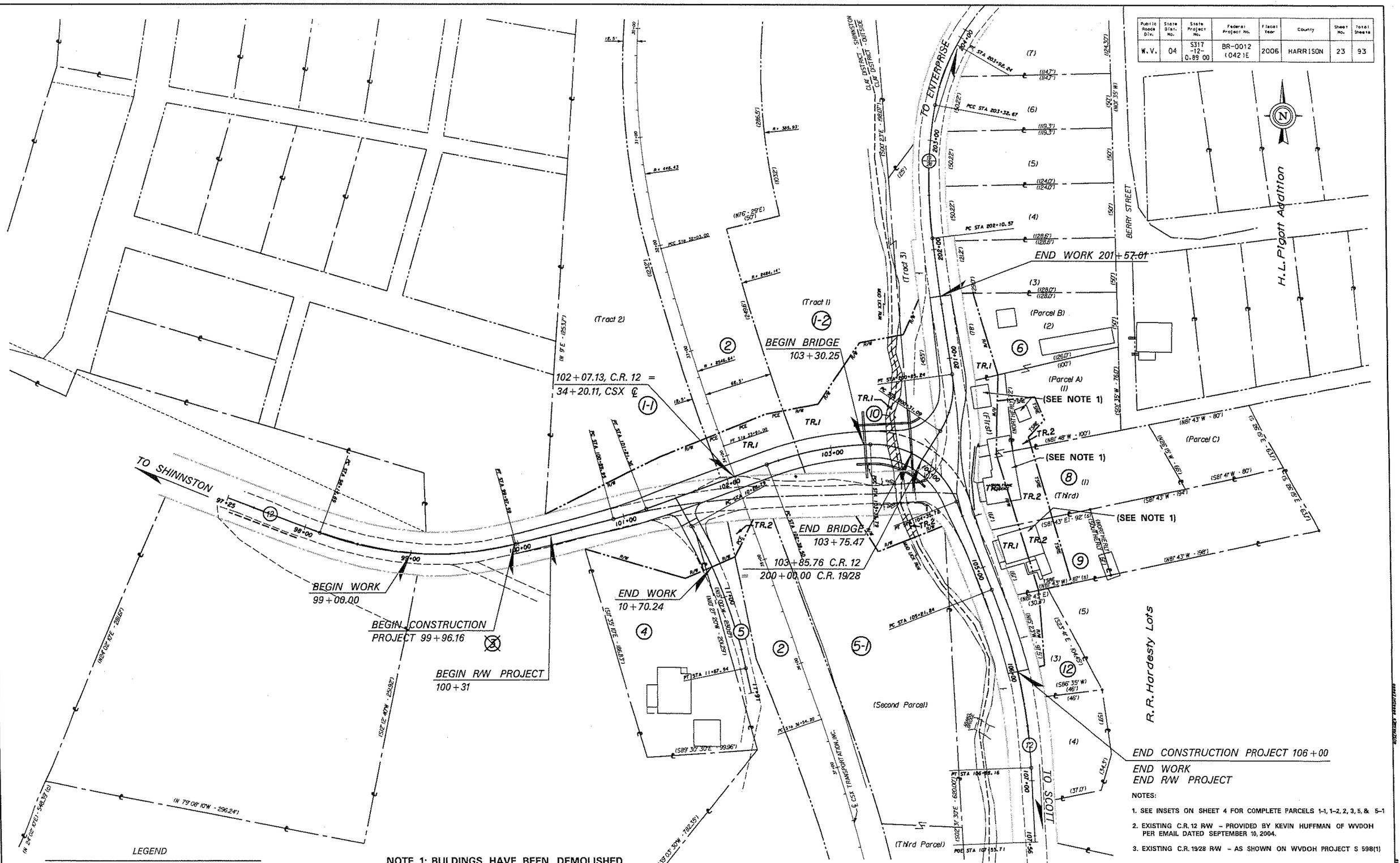

NOTES:

1. SEE INSETS ON SHEET 4 FOR COMPLETE PARCELS 1-1, 1-2, 2, 3, 5, & 5-1
2. EXISTING C.R. 12 R/W – PROVIDED BY KEVIN HUFFMAN OF WVDOH PER EMAIL DATED SEPTEMBER 10, 2004.
3. EXISTING C.R. 19/28 R/W – AS SHOWN ON WVDOH PROJECT S 598(1)

LEGEND

PCE – PERMANENT CROSSING EASEMENT

TSRE – TEMPORARY STRUCTURE REMOVAL EASEMENT

– PARCEL 10, PUBLIC LAND CORPORATION, PERMANENT EASEMENT

NOTE 1: BULDINGS HAVE BEEN DEMOLISHED BY OTHERS UNDER SEPARATE CONTRACT

SCALE : 0 40 ft.

PREPARED BY URS CHARLESTON, WV

REVISION NUMBER	SHEET NUMBER	REVISION	DATE	BY

THE WEST VIRGINIA DEPARTMENT OF TRANSPORTATION
DIVISION OF HIGHWAYS

PROPERTY MAP

MAIN PROJECT AREA

P:\WVDOH SCOTT SLAB BRIDGE\CADD\Structure\PLANS\B-15-07\rdj_own_SCOTTSLAB02.dgn 8/16/2007 12:51:53 PM

JOBC29C98-PLAN

Public Roads Div.	State Dist. No.	State Project No.	Federal Project No.	Fiscal Year	County	Sheet No.	Total Sheets
W.V.	04	S317 -12- 0.89 00	BR-0012 (042)E	2006	HARRISON	24	93

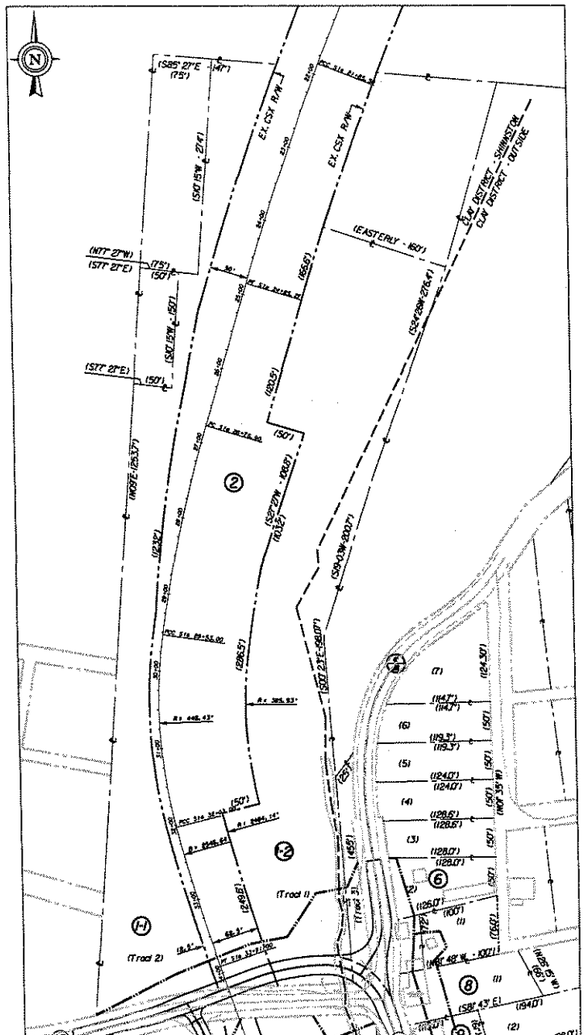

PARCELS 1-1, 1-2 & 2

SCALE: 1"=100'

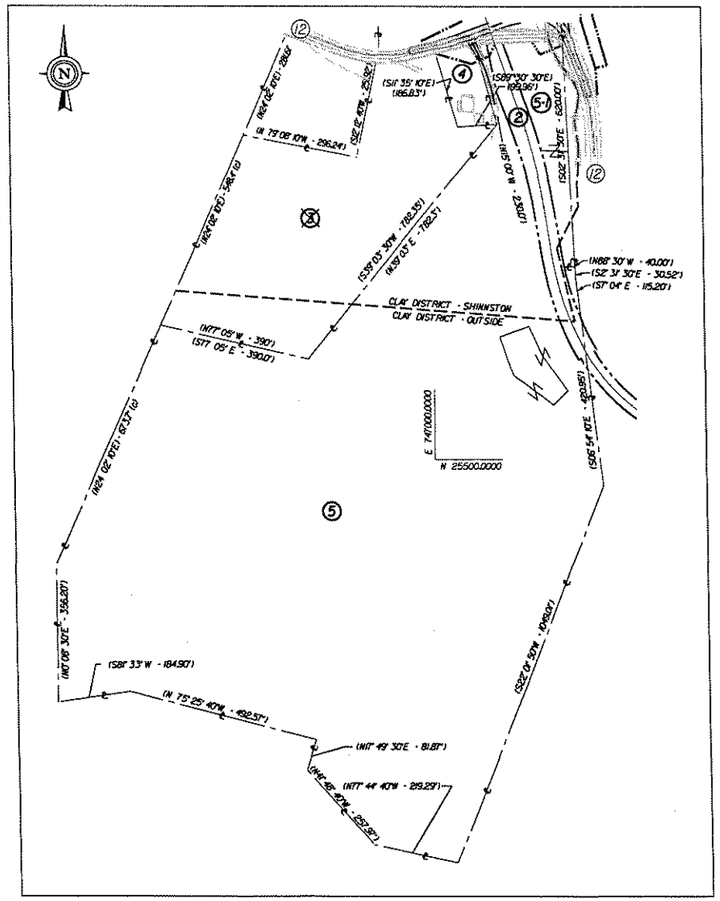

PARCELS 2, 3, & 5

SCALE: 1"=200'

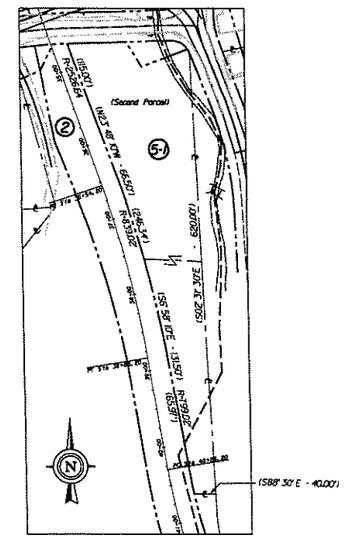

PARCEL 5-1

SCALE: 1"=100'

PREPARED BY

URS

CHARLESTON, WV

REVISION NUMBER	SHEET NUMBER	REVISION	DATE	BY

THE WEST VIRGINIA DEPARTMENT OF TRANSPORTATION
DIVISION OF HIGHWAYS

PROPERTY MAP

PARCELS 1-1, 1-2, 2, 3, 5, & 5-1

P:\WVDOH SCOTT SLAB BRIDGE\CADD\Structure\PLANS\8-15-07\rdg_own_SCOTTSLAB03\9.27.2005).dgn 8/16/2007 1:27:38 PM

Public Roads Div.	State Dist. No.	State Project No.	Federal Project No.	Fiscal Year	County	Sheet No.	Total Sheets
W.V.	04	S317 -12- 0.89 00	BR-0012 (042)E	2006	HARRISON	25	93

CURVE ①

PI = 99+09.08
Δ = 34°55'55" LT.
D = 19°05'55"
R = 300.00'
L = 182.90'
T = 94.39'

CURVE ②

PI = 101+05.67
Δ = 6°00'00" LT.
D = 19°05'55"
R = 300.00'
L = 31.42'
T = 15.72'
SE = 2.00%
V = 30 MPH

CURVE ③

PI = 102+87.58
Δ = 18°34'53" RT.
D = 19°05'55"
R = 300.00'
L = 97.29'
T = 49.08'
SE = 2.00%
V = 30 MPH

CURVE ④

PI = 103+93.17
Δ = 70°25'53" RT.
D = 70°28'59"
R = 81.29'
L = 99.93'
T = 57.38'
SE = 2.00%
V = 15 MPH

CURVE ⑤

PI = 200+59.41
Δ = 41°22'28" LT.
D = 76°23'40"
R = 75.00'
L = 54.16'
T = 28.32'
SE = VARIES (SEE PVMT PLAN)
V = 15 MPH

CURVE ⑥

PI = 10+98.66
Δ = 16°44'12" RT.
D = 12°03'44"
R = 475.00'
L = 138.75'
T = 69.87'
SE = NC
V = N/A

CURVE ⑦

PI = 106+05.78
Δ = 19°03'30" RT.
D = 11°27'33"
R = 500.00'
L = 166.32'
T = 83.93'
SE = MATCH EXISTING
V = N/A

G1 STA. 102+58.10. LT. BEGIN TYPE I GR. CLASS II INSTALL BUFFER END

G2 STA. 103+23.29. LT. END THRIE BEAM CONNECT TO BRIDGE

G3 STA. 103+22.37. RT. END THRIE BEAM CONNECT TO BRIDGE

G4 STA. 102+62.67. RT. BEGIN TYPE I GR. CLASS II INSTALL BUFFER END

G5 STA. 104+05.11. RT. BEGIN THRIE BEAM CONNECT TO BRIDGE

G6 STA. 104+80.12. RT. END TYPE I GR. CLASS II INSTALL BUFFER END

G7 STA. 200+30.54. LT. BEGIN THRIE BEAM CONNECT TO BRIDGE

G8 STA. 200+84.25. LT. END TYPE I GR. CLASS II INSTALL BUFFER END

STA. 99+96.16
COUNTY ROUTE 12
BEGIN PROJECT
MATCH EXISTING

STA. 99+00
BEGIN WORK

STA. 100+81, 18' LT. BEND
BEGIN DITCH

STA. 100+50, 17' RT.
BEGIN DITCH

STA. 10+24.82
END PAVEMENT
BEGIN STONE

STA. 10+12.12
BEGIN DRIVE 1

STA. 101+66, 21 LT.
END DITCH

STA. 101+50.00
COUNTY ROUTE 12
= STA. 10+00.00
DRIVE 1

STA. 10+70.24
DRIVE 1
END WORK

STA. 102+07.13 COUNTY ROUTE 12
STA. 34+20.11 CSX TRANSPORTATION, INC.

BEGIN BRIDGE
103+30.25

STA. 103+85.76
COUNTY ROUTE 12
= STA. 200+00.00
COUNTY ROUTE 19/28

END BRIDGE
103+75.47

STA. 201+57.01
COUNTY ROUTE 19/28
END WORK
MATCH EXISTING

STA. 201+28, 18' RT.
BEGIN DITCH

STA. 105+25, 14' LT.
BEGIN DITCH

STA. 106+00.00
COUNTY ROUTE 12
END PROJECT
END WORK
MATCH EXISTING

CUT & PLUG
EXISTING 15" CMP

REMOVE EXISTING
18" RCP

REMOVE EXISTING
24" CMP

REMOVE EXISTING
12" CMP

102+09
42' RT.
REMOVE
8" PVC

101+86.36' RT. (CR.12)
(34+57.20' RT. (CSX))

DRG 1
W = 2.5'
D = 2'
T = 1'
L = 50'

DRG 2
W = 2'
D = 1'
T = 1'
L = 5'

TBM 1
RAILROAD SPIKE IN UTILITY POLE UR106
ELEV. 925.18

TBM 2
RAILROAD SPIKE IN UTILITY POLE 62/43
ELEV. 921.10

(ES 1) STA. 101+25, 34' RT.
METAL END SECTION
I.E. 923.00
75' OF 30" CSP

(ES 2) STA. 102+00, 34' RT.
METAL END SECTION
I.E. 920.00

(ES 3) STA. 104+25, 28' LT.
TYPE G INLET
T.G. 919.0
I.E. 916.33
61' OF 24" CSP

(ES 4) STA. 104+25, 34' RT.
METAL END SECTION
I.E. 915.50

DENOTES SCARIFY AND MULCH. GRADE TO DRAIN.

NOTE 1: BUILDINGS HAVE BEEN DEMOLISHED BY OTHERS UNDER SEPARATE CONTRACT.

SCALE : 0 20 ft.

PREPARED BY
URS
CHARLESTON, WV

REVISION NUMBER	SHEET NUMBER	REVISION	DATE	BY

THE WEST VIRGINIA DEPARTMENT OF TRANSPORTATION
DIVISION OF HIGHWAYS

PLAN SHEET

P:\WVDOH SCOTT SLAB BRIDGE\CADD\Structure\PLANS\8-15-07\rdg-pln.scottslab.dgn 8/17/2007 1:28:03 PM

Public Roads Div.	State Dist. No.	State Project No.	Federal Project No.	Fiscal Year	Station To Station	Sheet No.	Total Sheets
W.V.	04	S317 -12- 0.89 00	BR-0012 (042)E	2006	99+50 to 104+50	26	93

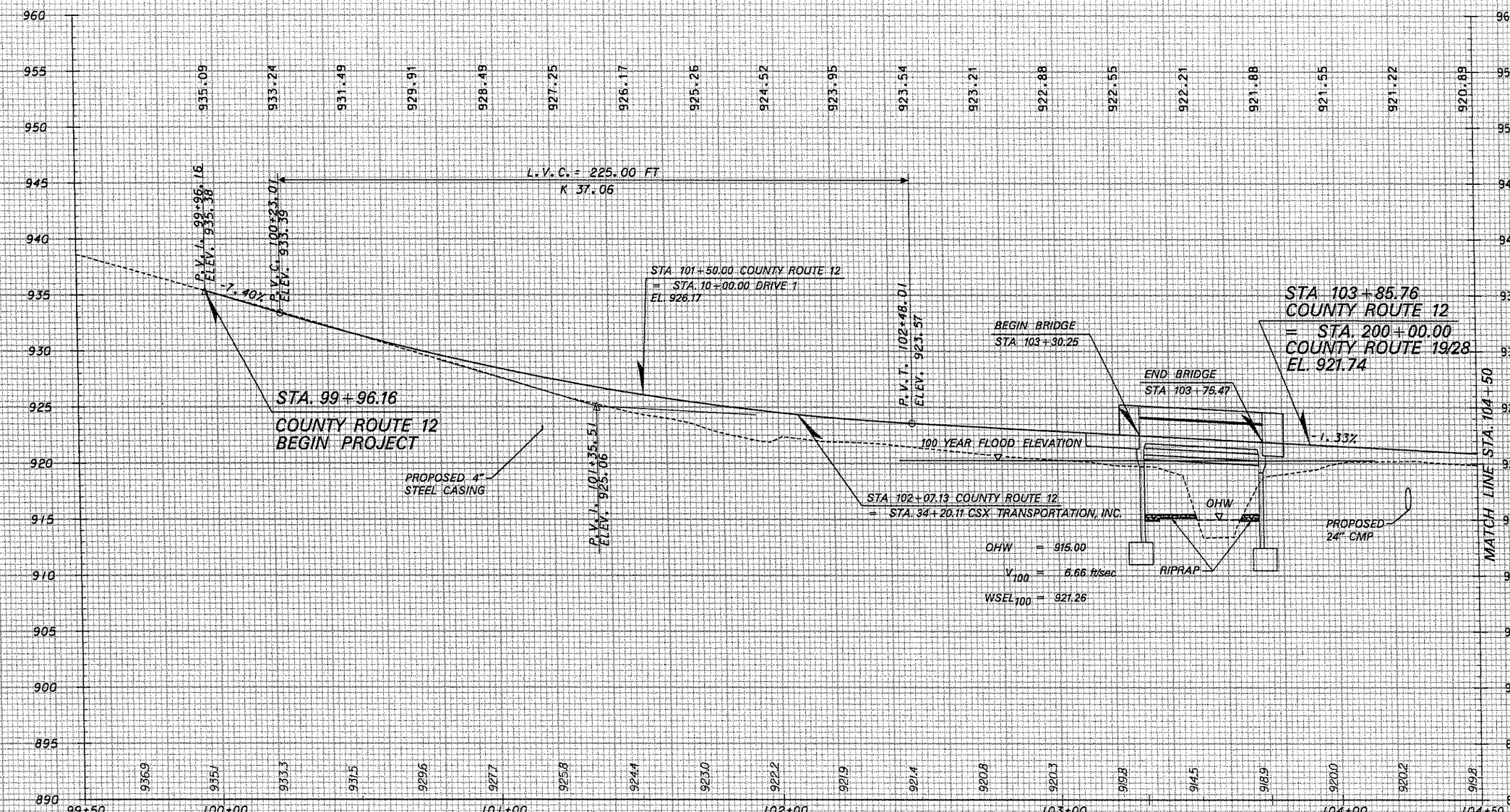

COUNTY ROUTE 12

SCALES 0 20 ft. 5 ft. 0

PREPARED BY
URS
CHARLESTON, WV

REVISION NUMBER	SHEET NUMBER	REVISION	DATE	BY

THE WEST VIRGINIA DEPARTMENT OF TRANSPORTATION
DIVISION OF HIGHWAYS

C.R. 12 PROFILE

STA. 99+50 to STA. 104+50

P:\WVDOH SCOTT SLAB BRIDGE\CADD\Structure\PLANS\8-15-07\rdg.pro_scottslabCR12(9.27.2005).dgn 8/16/2007 1:29:47 PM

Public Roads Div.	State Dist. No.	State Project No.	Federal Project No.	Fiscal Year	Station To Station	Sheet No.	Total Sheets
W.V.	04	S317 -12- 0.89 00	BR-0012 (042)E	2006	104+50 to 108+00	27	93

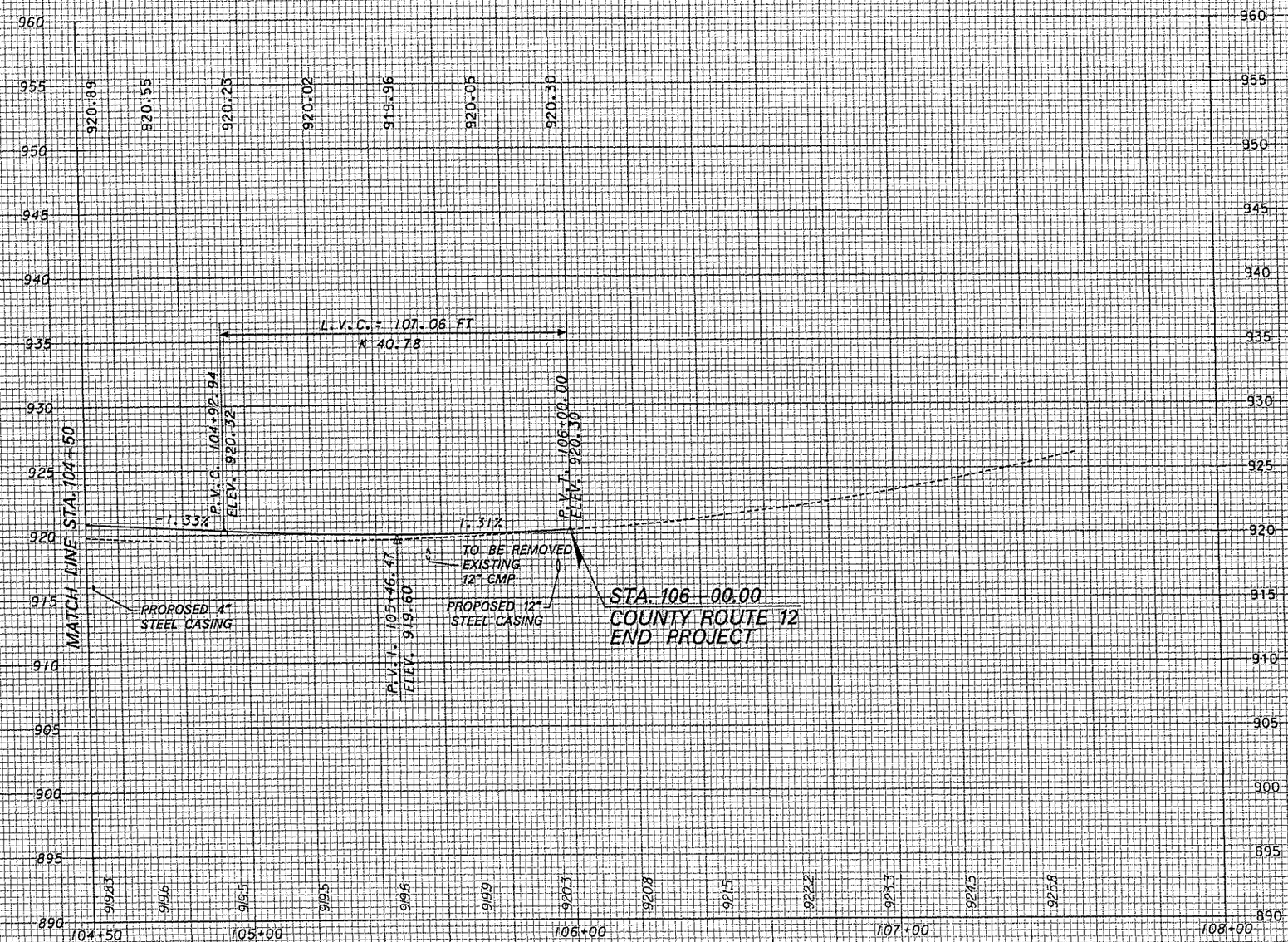

COUNTY ROUTE 12

SCALES
5 ft.
0 20 ft. 0

PREPARED BY
URS
CHARLESTON, WV

REVISION NUMBER	SHEET NUMBER	REVISION	DATE	BY

THE WEST VIRGINIA DEPARTMENT OF TRANSPORTATION
DIVISION OF HIGHWAYS

C.R. 12 PROFILE

STA. 104+50 to STA. 106+00

Master 02/09/2006

p:\21534954 (ScottSlab)\cad\dgn\rdy_pro_scottslabCR12.dgn

Public Roads Div.	State Dist. No.	State Project No.	Federal Project No.	Fiscal Year	Station To Station	Sheet No.	Total Sheets
W.V.	04	S317 -12- 0.89 00	BR-0012 (042)E	2006	200+00 to 205+00	28	93

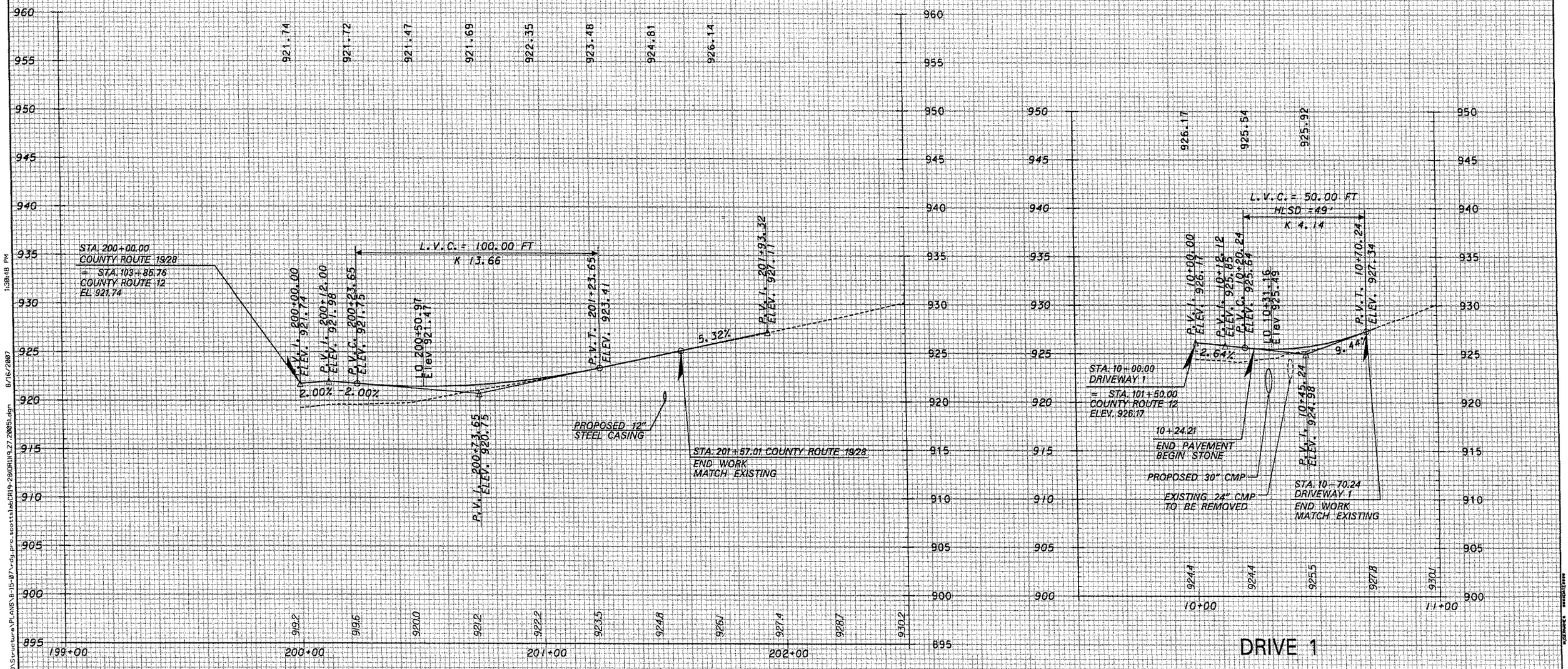

SCALES 0 20 ft. 5 ft. 0

PREPARED BY
URS
CHARLESTON, WV

REVISION NUMBER	SHEET NUMBER	REVISION	DATE	BY

THE WEST VIRGINIA DEPARTMENT OF TRANSPORTATION
DIVISION OF HIGHWAYS

C.R. 19/28 & DRIVE 1 PROFILE

STA. 200+00 to STA. 202+50
STA 10+00 to STA 11+00

P:\WVDOH SCOTT SLAB BRIDGE\CADD\Structure\PLANS\8-15-07\rdy_pro_scottslabCR19-28(DRIV9.27.2005).dgn 8/16/2007 1:30:48 PM

Public Roads Div.	State Dist. No.	State Project No.	Federal Project No.	Fiscal Year	County	Sheet No.	Total Sheets
W.V.	04	S317 -12- 0.89 00	BR-0012 (042)E	2006	HARRISON	29	93

SUMMARY OF QUANTITIES

ITEM NO.	DESCRIPTION	QUANTITY	
		UNIT	TOTAL
657008-001	2.00 LB CHANNEL POST	LF	48
657010-001	3.00 LB CHANNEL POST	LF	91.5
657018-001	POST REMOVAL	EA	9
661001-001	0.080 IN FLAT SHEET SIGN	SF	38
661011-001	INSTALLATION OF REUSABLE SIGNS	EA	2
663001-004	EDGE LINE, TYPE II, WHITE	LF	1450
663003-005	BARRIER LINE, TYPE II	LF	1400
663005-010	STOP LINE, TYPE V, 24"	LF	22

SIGNING GENERAL NOTES

GOVERNING SPECIFICATIONS

THE WEST VIRGINIA DEPARTMENT OF TRANSPORTATION, DIVISION OF HIGHWAYS STANDARD SPECIFICATIONS ROADS AND BRIDGES, ADOPTED 2000, AS AMENDED BY THE WEST VIRGINIA DEPARTMENT OF TRANSPORTATION, DIVISION OF HIGHWAYS SUPPLEMENTAL SPECIFICATIONS DATED JANUARY 1, 2003, THE CONTRACT DOCUMENTS AND THE CONTRACT PLANS ARE THE GOVERNING PROVISIONS APPLICABLE TO THIS PROJECT.

CONSTRCUTION LAYOUT STAKES

CONSTRUCTION LAYOUT STAKES FOR SIGNING WILL BE INCIDENTAL TO THE CONTRACT AMOUNT BID AND INCLUDED IN THE VARIOUS SIGNING ITEMS.

CORNERS

CORNERS OF ALL SHEET ALUMINUM SIGNS SHALL BE ROUNDED; HOWEVER, CORNERS OF ALUMINUM SIGN FACES (EXTRUDED OR OVERLAYS) SHALL NOT BE ROUNDED. FABRICATED SIGNS WITH DIRECT APPLIED COPY (BLUE, GREEN OR BROWN BACKGROUND) SHALL HAVE A 1/2 INCH CORNER RADIUS ON THE ALUMINUM BLANK.

SIGN FABRICATION

ALL SIGNS SHALL BE FABRICATED IN ACCORDANCE WITH THE LATEST EDITION OF THE UNITED STATES DEPARTMENT OF TRANSPORTATION, FEDERAL HIGHWAY ADMINISTRATION "STANDARD HIGHWAY SIGNS". ANY SIGN FABRICATION DETAIL NOT REPRESENTED IN THAT PUBLICATION SHALL BE FABRICATED IN ACCORDANCE WITH THE WEST VIRGINIA DEPARTMENT OF TRANSPORTATION, DIVISION OF HIGHWAYS "SIGN FABRICATION MANUAL", "DESIGN GUIDE FOR SIGNING", "STANDARD SPECIFICATIONS ROADS AND BRIDGES", LATEST EDITIONS.

REFLECTIVE SHEETING

ALL BACKGROUND MATERIAL FOR SIGNS IN THIS PROJECT SHALL BE REFLECTIVE SHEETING TYPE II. TYPE II REFLECTIVE SHEETING SHALL BE REQUIRED IN THIS PROJECT ON SHIELDS FOR GUIDE SIGNS. SEE STANDARD DETAIL TE12-1. ALL SHEETING USED IN THIS PROJECT MUST HAVE SUCCESSFULLY COMPLETED 3 YEARS IN THE AASHTO/NTPEP OUTDOOR REFLECTIVE SHEETING PERFORMANCE TESTING PROGRAM.

POST REMOVAL ITEM 657018-001

POST REMOVAL FOR GROUND MOUNTED SIGNS ON EXISTING BREAKAWAY SUPPORTS SHALL INCLUDE THE CUTTING OFF OF THE EXISTING STUB(S) TO A MINIMUM OF 6" BELOW GROUND AND THE RESTORATION OF THE GROUND TO ITS ORIGINAL CONDITION.

BOLT TIGHTENING

A CALIBRATED DEVICE ACCEPTABLE TO THE ENGINEER SHALL BE PROVIDED BY THE CONTRACTOR TO INSURE THE STIPULATED TORQUE AND/OR TENSION THAT IS SET FORTH BY THE PLANS.

SIGN PUNCHING

SIGNS 60 INCHES OR MORE IN HEIGHT SHALL HAVE THREE RIBS. THE THIRD RIB SHALL BE MOUNTED ALONG THE HORIZONTAL CENTERLINE AND IN LINE WITH THE OTHER SETS OF HOLES.

POST CLIPS

ALL POST CLIPS SHALL BE PROVIDED WITH A STAINLESS STEEL BOLT WHICH SHALL CONFORM TO STAINLESS STEEL ALLOY 304, ASTM A 193, GRADE B8 OR ASTM A 194, GRADE 8. POST CLIP BOLTS SHALL CONFORM TO THE DIMENSIONS SHOWN ON STANDARD DETAIL TE7-1. HEX LOCK NUTS SHALL CONFORM TO STAINLESS STEEL ALLOY 303, ASTM A 193, GRADE B 8F OR ASTM A 194, GRADE 8F. POST CLIP WASHERS SHALL CONFORM TO STAINLESS STEEL ALLOY 302, ASTM A276. WASHER DIMENSIONS ARE 3/4" DIA. X .062" WITH .406" DIA. HOLE.

DEMOUNTABLE COPY AND BORDERS

DEMOUNTABLE COPY AND BORDERS SHALL NOT BE POSITIONED ON ANY SIGN FACE BY MEANS OF TAPE OR GLUE. ALL DEMOUNTABLE COPY AND BORDERS SHALL BE ATTACHED TO THE SIGN FACE USING APPROVED RIVETS ONLY. THE FOLLOWING TYPE OF DEMOUNTABLE COPY SHALL BE USED IN THE PROJECT: COPY FABRICATED FROM 0.080 INCH THICK ALUMINUM SHEETS CONFORMING TO ASTM B 209 ALLOY 6061-T6 OR 5052-H38 MEETING THE REQUIREMENTS OF SECTION 661 AND COVERED WITH TYPE II REFLECTIVE SHEETING CONFORMING TO SECTION 715.9.2.3 OF THE SPECIFICATIONS, LATEST EDITION.

IDENTIFICATION CODES AND DECALS

AN IDENTIFICATION CODE SHALL BE PLACED ON ALL SIGNS WITH SCREENED MESSAGES THAT ARE MANUFACTURED FOR THE DIVISION OF HIGHWAYS. THE CODE SHALL CONSIST OF THE LETTERS "WVDH" WITH AN ABBREVIATED FORM OF MONTH AND YEAR OF FABRICATION DIRECTLY BELOW. IT SHALL ALSO INCLUDE AN ABBREVIATED NAME OF THE SHEETING MANUFACTURER AND THE INK MANUFACTURER.
EXAMPLE: WVDH 3M
8/97 A

EACH LINE OF LETTERS OR NUMERALS SHALL BE 1/4 INCH HIGH, NO GREATER THAN 1 INCH IN LENGTH AND OF THE SAME COLOR AS THAT BEING SCREENED. THE CODE SHALL BE PLACED ON THE LOWER RIGHT HAND EDGE OF THE SIGN. IF THE SIGN HAS BOTH BORDER AND MARGIN, THE CODE SHALL BE WITHIN THE BORDER, BUT MAY EXTEND INTO THE MARGIN AND/OR SIGN AREA. IF THE SIGN HAS BORDER ONLY, THE CODE SHALL BE WITHIN THE BORDER, BUT MAY EXTEND INTO THE SIGN AREA. A SIGN IDENTIFICATION DECAL SHALL BE APPLIED TO THE LOWER RIGHT HAND CORNER (FACING BACK OF SIGN) OF ALL FLAT SHEET SIGNS STATING THE MONTH AND YEAR OF INSTALLATION. EXTRUDED PANEL SIGNS AND FABRICATED FLAT SHEET SIGNS WITH DIRECT APPLIED COPY SHALL HAVE TWO SEPARATE DECALS APPLIED TO THE LOWER RIGHT HAND CORNER (FACING BACK OF SIGN), ONE STATING THE MONTH AND YEAR OF INSTALLATION AND THE OTHER STATING THE MANUFACTURER OF THE SHEETING. SEE CONTRACT PLANS FOR DECAL DETAILS.

HARDWARE

ON ALL FLAT SHEET SIGNS THE MOUNTING HARDWARE SHALL BE OF A VANDAL-RESISTANT DESIGN. THE FABRICATOR SHALL SUPPLY FIVE (5) PIECES OF MATERIAL TO THE DIVISION OF HIGHWAYS FOR TESTING PRIOR TO THE MANUFACTURE OF SIGNS. THE DIVISION OF HIGHWAYS ALSO RESERVES THE RIGHT TO RANDOM TEST THIS MATERIAL AFTER SHIPMENT TO THE PROJECT.

BOLT: 5/16"X3"X18. BOLT HEAD TO BE ROUND, DOME WITH ONE-WAY SLOT. BOLT SHALL HAVE A 2 INCH MINIMUM THREAD AND BE MANUFACTURED OF STEEL IN ACCORDANCE WITH ASTM A-307.

NUT: CONE SHAPED WITH HEX SHAPED DRIVE HEAD DESIGNED TO SHEAR OFF AT A PREDETERMINED TORQUE OF NO LESS THAN 4FT/LBS AND NO GREATER THAN 8FT/LBS WHEN USING MATERIALS, CONTROL, SOILS AND TESTING MP NO. 661.20.00. NUT SHALL BE MANUFACTURED OF STEEL IN ACCORDANCE WITH ASTM A-563, GRADE A.

COATING ON BOTH NUT AND BOLT SHALL BE IN ACCORDANCE WITH ASTM B-766, CLASS B, TYPE 2 (CADMIUM DICHROMATE). THREAD FIT ON NUT AND BOLT SHALL ALLOW WORKERS TO ASSEMBLE HARDWARE WITH THEIR FINGERS BEFORE TIGHTENING.

SIGN RELOCATION

EXISTING SIGNS NOT SHOWN ON THE PLANS AFFECTED BY CONSTRUCTION ARE TO BE REMOVED UNLESS DIRECTED BY THE ENGINEER. ALL OTHER EXISTING SIGNS ARE TO REMAIN UNLESS OTHERWISE NOTED ON THE PLANS.

EXISTING SIGNS "TO BE RELOCATED" ARE SHOWN AT THEIR RELOCATED POSITION. RELOCATED SIGNS HAVE APPROXIMATELY THE SAME LOCATION AS THE EXISTING SIGN (WITHIN A 50' RADIUS) UNLESS OTHERWISE INDICATED ON THE PLANS.

PAVEMENT MARKING GENERAL NOTES

1. ALL 4" SOLID WHITE OR SOLID YELLOW EDGE LINES AND CENTERLINES SHALL BE TYPE II PAVEMENT MARKING MATERIAL.
2. EDGE LINES SHALL BE CENTERED 6" FROM EDGE OF LANE AS APPLICABLE.
3. ALL MARKINGS SHALL BE CONTINUOUS AND CONSISTENT WITH EXISTING MARKINGS WHERE THEY JOIN.
4. NO MARKINGS SHALL BE PLACED ON EXPANSION JOINTS ON STRUCTURES OR ON LONGITUNDNAL CONSTRUCTION JOINTS UNLESS SO DIRECTED BY THE ENGINEER.

DWG. NO. S-1

PREPARED BY
URS
CHARLESTON, WV

REVISION NUMBER	SHEET NUMBER	REVISION	DATE	BY

THE WEST VIRGINIA DEPARTMENT OF TRANSPORTATION
DIVISION OF HIGHWAYS
SIGNING AND MARKINGS
SUMMARY OF QUANTITIES
GENERAL NOTES

P:\WVDOH SCOTT SLAB BRIDGE\CADD\Structure\PLANS\8-15-07\vrf_gns_scottslab0219.27.2005.dgn 8/16/2007 1:35:04 PM
J06C29C98-PLAN 4

Public Roads Div.	State Dist. No.	State Project No.	Federal Project No.	Fiscal Year	County	Sheet No.	Total Sheets
W.V.	04	S317 -12- 0.89 00	BR-0012 (042)E	2006	HARRISON	30	93

ASSEMBLY NUMBER	SIGN NUMBER	PROPOSED LOCATION	EXISTING LOCATION	LAYOUT SHT. NO. / FABRICATION DETAIL SHT. NO.	SIGN DISPOSITION	SIGNS: LENGTH	HEIGHT	FLAT SHEET 0.080 S.F.	FLAT SHEET 0.080 OVERLAY S.F.	EXTRUDED PANEL S.F.	INSTALL REUSED SIGN	SUPPORTS & FOUNDATIONS: U-CHANNEL 2.00 #/ft	U-CHANNEL 3.00 #/ft	U-CHANNEL 4.00 BB #/ft	U-CHANNEL 6.00 BB #/ft	POST REMOVAL	REUSE EX. SPTS.	A-572, GRADE 50 5x7.7 L.F.	6x12 L.F.	12x28 L.F.	10x22 L.F.	FOOTER DIA FT.	FOOTER DEPTH FT.	CLASS B CONC. REINF. C.Y.
1	W1-2R	102+00		S-3	NEW	3.0	3.0	9.00					16.0/16.0											
	W13-1				NEW	1.5	1.5	2.25																
3	-		104+30	S-3	R&S	1.25	4.0									1								
	XS-3		104+30	S-3	R&D	2.5	2.5																	
4	-	103+25	104+30	S-3		1.25	4.0				1	11.5/12.5												
5	XS-3		103+63	S-3	R&D	2.5	2.5									1								
6	XS-3		103+53	S-3	R&D	2.5	2.5									1								
7	W5-3		105+70	S-3	R&D	3	3									1								
8	R2-1		106+10	S-3	STR	3	4																	
9	W5-3		201+80	S-3	R&D	3	3									1								
10	XS-3		103+96	S-3	R&D	2.5	2.5									1								
11	R1-1		103+99	S-3	R&D	2.5	2.5									1								
12	R1-1	200+22		S-3	NEW	2.5	2.5	6.25					13.0											
13			103+95	S-3	R&S	1.25	4									1								
14			104+50	S-3		1.25	4				1	11.5/12.5												
15	R1-1		104+52	S-3	R&D	2.5	2.5									1								
16	W1-2L	105+50		S-3	NEW	3.0	3.0	9.00					16.0/16.0											
	W13-1				NEW	1.5	1.5	2.25																
17	W3-1a	201+50		S-3	NEW	3.0	3.0	9.00					14.5											
				TOTAL				37.75			2	48	91.5			9								

STR - SIGN TO REMAIN IN PLACE
R&D - REMOVE AND DISCARD
R&S - REMOVE AND SAVE (REUSE)
NEW - NEW SIGN

PREPARED BY
URS
CHARLESTON, WV

REVISION NUMBER	SHEET NUMBER	REVISION	DATE	BY

THE WEST VIRGINIA DEPARTMENT OF TRANSPORTATION
DIVISION OF HIGHWAYS

SIGNING ESTIMATE OF QUANTITIES

DWG. NO. S-2

01\2153\4934\Sco1t5\sb1\cad\dgn\trf_est_sco1t5sb1.dgn Master 09/27/2005

Public Roads Div.	State Dist. No.	State Project No.	Federal Project No.	Fiscal Year	County	Sheet No.	Total Sheets
W.V.	04	S317 -12- 0.89 00	BR-0012 (042)E	2006	HARRISON	31	93

PAVEMENT MARKINGS

ESTIMATE OF QUANTITIES

ITEM	ITEM NO.	DESCRIPTION	UNIT	TOTAL
Ⓐ	663001-004	EDGE LINE, TYPE II, WHITE	LF	1450
Ⓑ	663003-005	BARRIER LINE, TYPE II	LF	1400
Ⓒ	663004-004	CHANNELIZING LINE, TYPE II	LF	-
Ⓓ	663005-010	STOP LINE, TYPE V, 24"	LF	22
Ⓔ	663010-010	LANE ARROW, TYPE V	EA	-

LEGEND

NEW SIGN AND/OR SUPPORT

EXISTING SIGN AND SUPPORT

SIGNS TO REMAIN (STR)

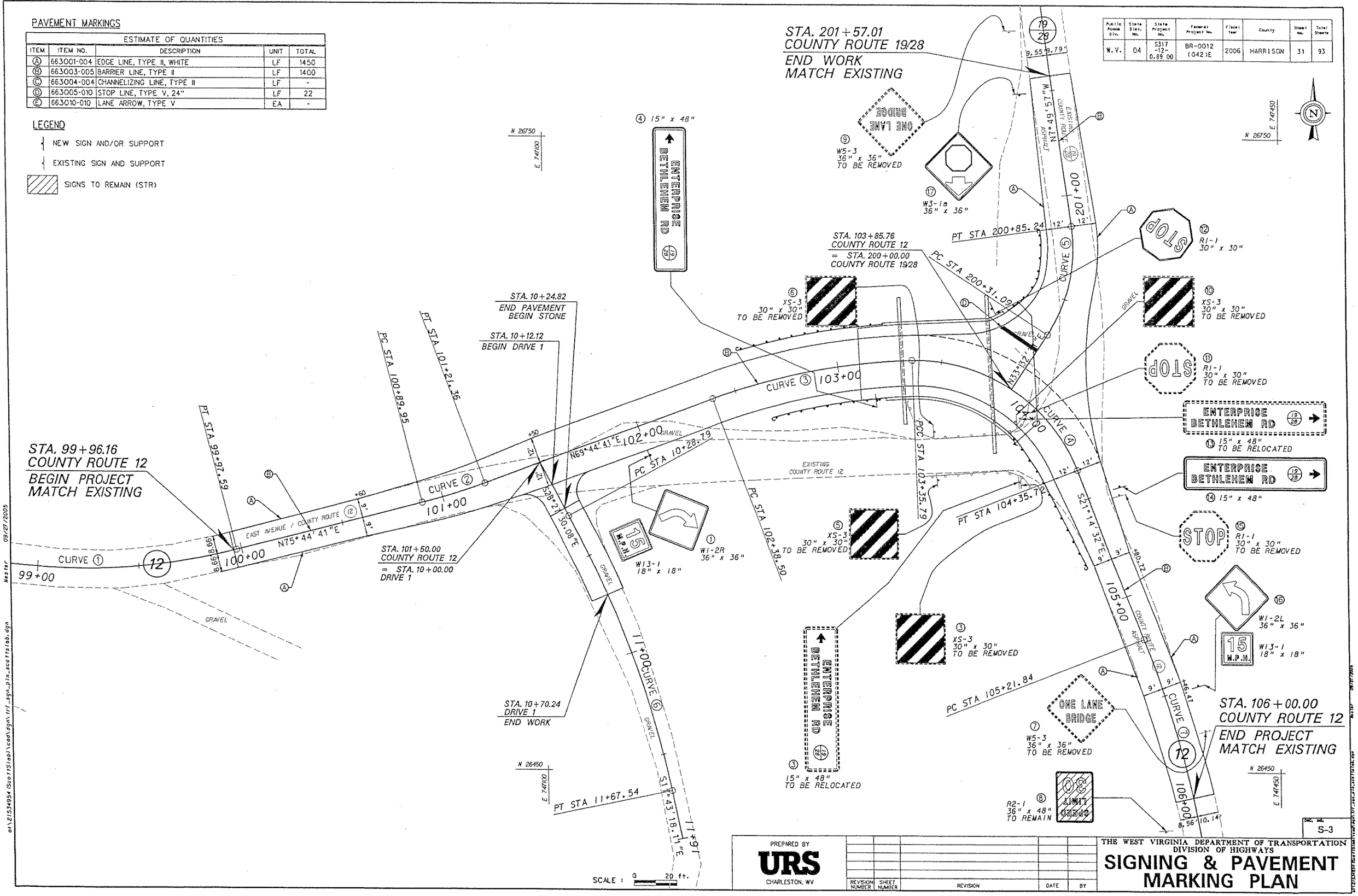

PREPARED BY
URS
CHARLESTON, WV

REVISION NUMBER	SHEET NUMBER	REVISION	DATE	BY

THE WEST VIRGINIA DEPARTMENT OF TRANSPORTATION
DIVISION OF HIGHWAYS

SIGNING & PAVEMENT MARKING PLAN

S-3

01\2153494\Scottslab\cad\dgn\trf_sgn_pln_scottslab.dgn Master 09/27/2005

Public Roads Div.	State Dist. No.	State Project No.	Federal Project No.	Fiscal Year	County	Sheet No.	Total Sheets
W.V.	04	S317 -12- 0.89 00	BR-0012 (042)E	2006	HARRISON	32	93

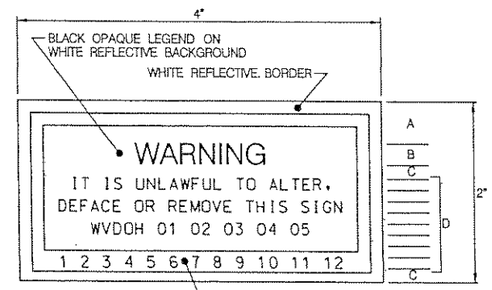

LETTER	DIMENSION
A	1/4"
B	3/8"
C	3/16"
D	1/8"

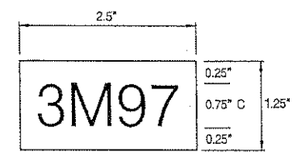

BLACK NON-REFLECTIVE LEGEND, NO BORDER
WHITE REFLECTIVE SHEETING BACKGROUND

DECALS FOR FLAT SHEET AND EXTRUDED PANEL SIGNS WILL BE PROVIDED BY THE SIGN FABRICATOR. THE YEAR AND MONTH OF INSTALLATION ARE TO BE PUNCHED OUT BY THE CONTRACTOR. SEE SIGNING GENERAL NOTES.

SIGN IDENTIFICATION DECALS

N.T.S

DWG. NO. S-4

PREPARED BY
URS
CHARLESTON, WV

REVISION NUMBER	SHEET NUMBER	REVISION	DATE	BY

THE WEST VIRGINIA DEPARTMENT OF TRANSPORTATION
DIVISION OF HIGHWAYS

SIGN DETAILS

o:\21534954\Scottslab\cad\dgn\trf_sgn_dtl_scottslab.dgn kester 09/27/2005

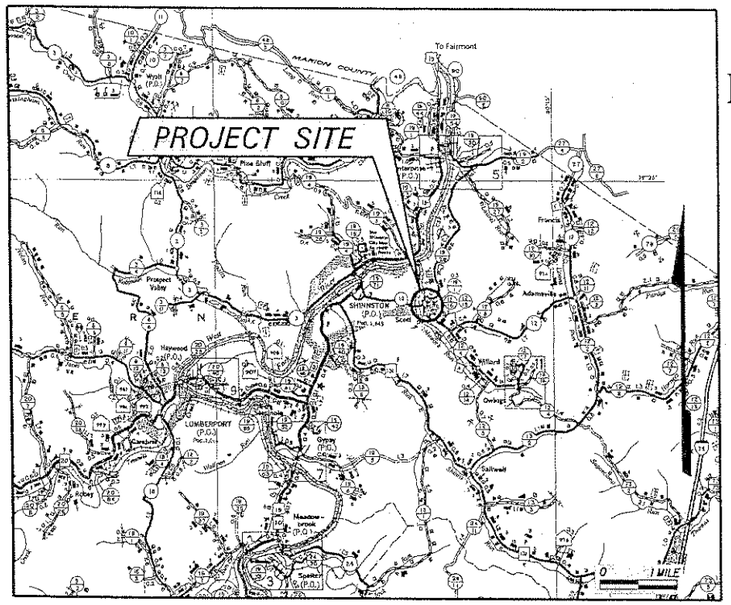

WEST VIRGINIA DEPARTMENT OF TRANSPORTATION DIVISION OF HIGHWAYS

BORING LAYOUTS

OF

STATE HIGHWAY

FEDERAL PROJECT NO. BR-0012(042)E

STATE PROJECT NO. S317-12-0.89 00

COUNTY ROUTE NO. 12

CLAY(OUTSIDE) & CLAY(SHINNSTON) DISTRICTS

HARRISON COUNTY

SCOTT SLAB BRIDGE

	Station		Station		Roadway		Bridge	Miles
Roadway	99+96.16	to	103+30.25	=	334.09	=		0.063
Bridge	103+30.25	to	103+75.47	=		=	45.22	0.009
Roadway	103+75.47	to	106+00.00	=	224.53	=		0.042
			Total Project Length	=	558.62	=	45.22	0.114

Public Roads Div.	State Dist. No.	State Project No.	Federal Project No.	Fiscal Year	County	Sheet No.	Total Sheets
W.V.	04	S317 -12- 0.89 00	BR-0012 (042)E	2006	HARRISON	33	93

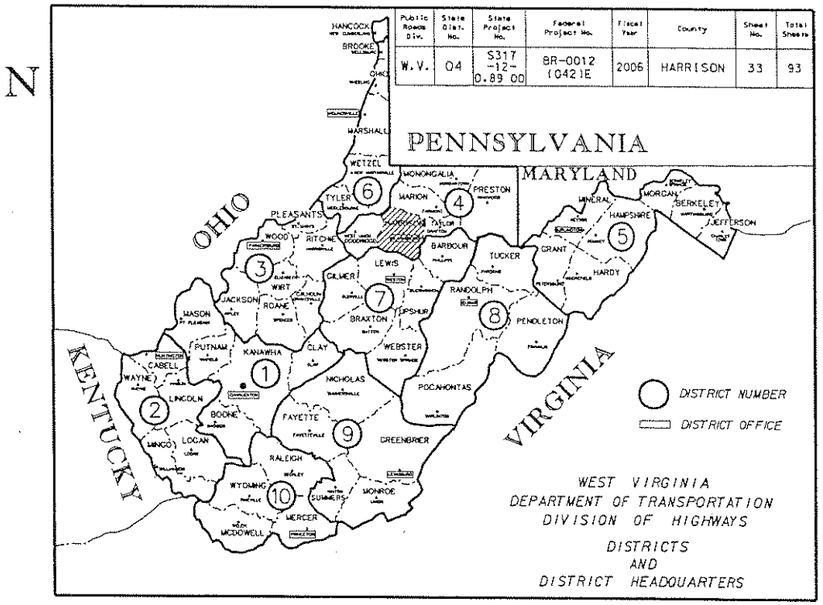

SOIL DENSITY/CONSISTENCY

GRANULAR	SPOON BLOWS	COHESIVE	SPOON BLOWS
VL -VERY LOOSE	0-4	VS -VERY SOFT	0-1
L -LOOSE	5-10	S -SOFT	2-4
MD -MEDIUM DENSE	11-24	MST -MEDIUM STIFF	5-8
D -DENSE	25-50	ST -STIFF	9-15
VD -VERY DENSE	51+	VST -VERY STIFF	16-30
		H -HARD	31-60
		VH -VERY HARD	61+

MINERALOGICAL DESCRIPTION OF ROCK AND SHALE

A -ARENACEOUS (SANDY)

L -CALCAREOUS (LIMEY)

C -ARGILLACEOUS (CLAYEY)

ROCK FIELD HARDNESS

VS -VERY SOFT

S -SOFT

M -MEDIUM

MH -MODERATELY HARD

H -HARD

VH -VERY HARD

SOIL-WATER CONSISTENCY

MOISTURE CONTENT BELOW PLASTIC LIMIT -PL

MOISTURE CONTENT ABOVE PLASTIC LIMIT -PL

MOISTURE CONTENT ABOVE LIQUID LIMIT -LL

LEGEND OF SYMBOLS USED ON SOIL AND GEOLOGIC DATA

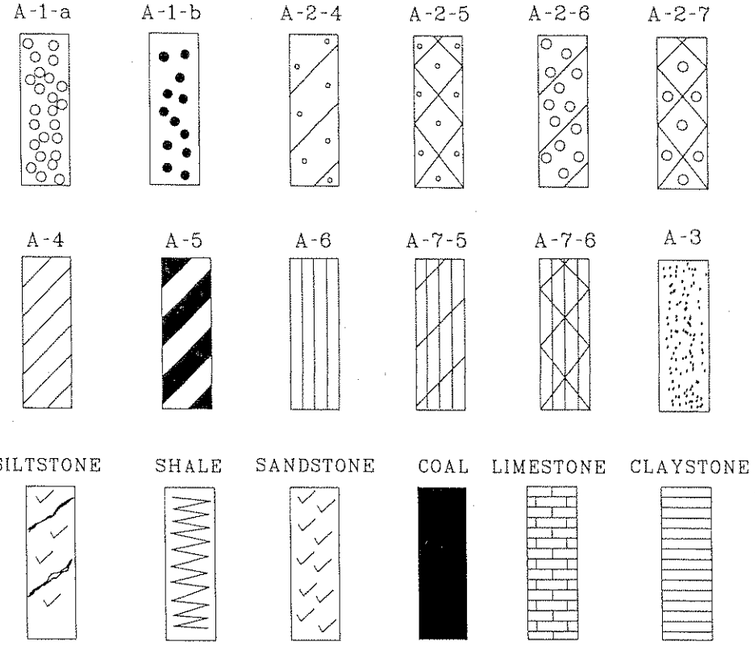

SPRING OR NOTABLE SEEPAGE

15° APPARENT STRIKE AND MEASURED DIP IN DEGREES

GROUND WATER W LEVEL

CORE BORING

TYPICAL PRESENTATION OF BORING DATA

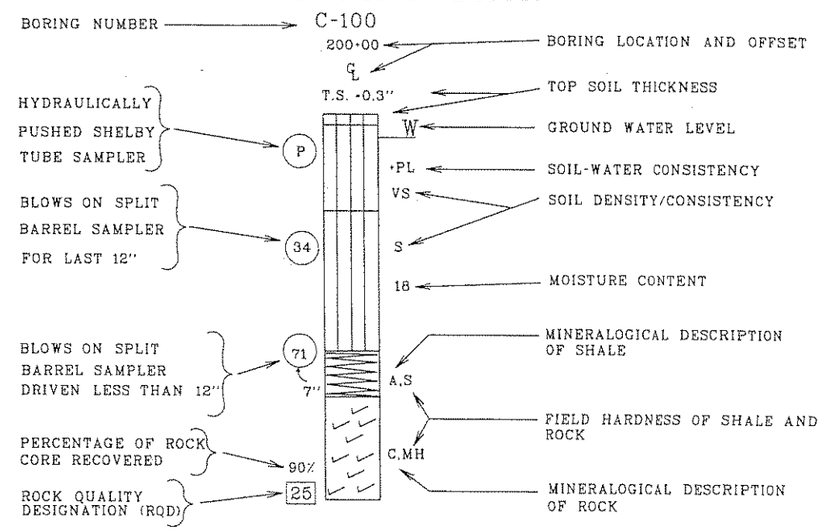

INDEX TO SHEETS

NO.	DESCRIPTION
—	—
—	—
—	—

PREPARED BY URS CHARLESTON, WV

01\21534954 (Scott Slab)\cad\dgn\rdy_bor_111_scottslab.dgn Master 09/27/2005

Public Roads Div.	State Dist. No.	State Project No.	Federal Project No.	Fiscal Year	County	Sheet No.	Total Sheets
W.V.	04	S317 -12- 0.89 00	BR-0012 (042)E	2006	HARRISON	34	93

CURVE ①

PI = 99+09.08
Δ = 34°55'55" LT.
D = 19°05'55"
R = 300.00'
L = 182.90'
T = 94.39'

CURVE ②

PI = 101+05.67
Δ = 6°00'00" LT.
D = 19°05'55"
R = 300.00'
L = 31.42'
T = 15.72'
SE = 2.00%
V = 30 MPH

CURVE ③

PI = 102+87.58
Δ = 18°34'53" RT.
D = 19°05'55"
R = 300.00'
L = 97.29'
T = 49.08'
SE = 2.00%
V = 30 MPH

CURVE ④

PI = 103+93.17
Δ = 70°25'53" RT.
D = 70°28'59"
R = 81.29'
L = 99.93'
T = 57.38'
SE = 2.00%
V = 15 MPH

CURVE ⑤

PI = 200+59.41
Δ = 41°22'28" LT.
D = 76°23'40"
R = 75.00'
L = 54.16'
T = 28.32'
SE = VARIES (SEE PVMT PLAN)
V = 15 MPH

CURVE ⑥

PI = 10+98.66
Δ = 16°44'12" RT.
D = 12°03'44"
R = 475.00'
L = 138.75'
T = 69.87'
SE = NC
V = N/A

CURVE ⑦

PI = 106+05.78
Δ = 19°03'30" RT.
D = 11°27'33"
R = 500.00'
L = 166.32'
T = 83.93'
SE = MATCH EXISTING
V = N/A

G1 STA. 102+58.10, LT. BEGIN TYPE I GR. CLASS II INSTALL BUFFER END

G2 STA. 103+23.29, LT. END THRIE BEAM CONNECT TO BRIDGE

G3 STA. 103+22.37, RT. END THRIE BEAM CONNECT TO BRIDGE

G4 STA. 102+62.67, RT. BEGIN TYPE I GR. CLASS II INSTALL BUFFER END

G5 STA. 104+05.11, RT. BEGIN THRIE BEAM CONNECT TO BRIDGE

G6 STA. 104+80.12, RT. END TYPE I GR. CLASS II INSTALL BUFFER END

G7 STA. 200+30.54, LT. BEGIN THRIE BEAM CONNECT TO BRIDGE

G8 STA. 200+84.25, LT. BEGIN TYPE I GR. CLASS II INSTALL BUFFER END

STA. 99+96.16
COUNTY ROUTE 12
BEGIN PROJECT
MATCH EXISTING

STA. 99+00
BEGIN WORK

STA. 100+81, 18' LT.
BEGIN DITCH

STA. 100+50, 17' RT.
BEGIN DITCH

STA. 10+24.82
END PAVEMENT
BEGIN STONE

STA. 10+12.12
BEGIN DRIVE 1

STA. 101+66, 21 LT.
END DITCH

STA. 102+07.13 COUNTY ROUTE 12
STA. 34+20.11 CSX TRANSPORTATION, INC.

BEGIN BRIDGE
103+30.25

CUT & PLUG
EXISTING 15" CMP

REMOVE EXISTING
18" RCP

STA. 101+50.00
COUNTY ROUTE 12
= STA. 10+00.00
DRIVE 1

STA. 10+70.24
DRIVE 1
END WORK

REMOVE
8" PVC

REMOVE EXISTING
24" CMP

END BRIDGE
103+75.47

STA. 103+85.76
COUNTY ROUTE 12
= STA. 200+00.00
COUNTY ROUTE 19/28

STA. 201+57.01
COUNTY ROUTE 19/28
END WORK
MATCH EXISTING

STA. 201+28, 18' RT.
BEGIN DITCH

STA. 105+25, 14' LT.
BEGIN DITCH

REMOVE EXISTING
12" CMP

STA. 106+00.00
COUNTY ROUTE 12
END PROJECT
END WORK
MATCH EXISTING

TBM 1
RAILROAD SPIKE IN UTILITY POLE UR106
ELEV. 925.18

TBM 2
RAILROAD SPIKE IN UTILITY POLE 62/43
ELEV. 921.10

DRG 1
W = 2.5'
D = 2'
T = 1'
L = 50'

DRG 2
W = 2'
D = 1'
T = 1'
L = 5'

BORING LAYOUT INFORMATION

BORING	STATION	OFFSET
B-1	103+33	18' L
B-2	103+29	18' R
B-3	103+62	32' L
B-4	103+84	19' R
B-5	103+62	12' R
B-6	103+78	9' L
R-1	100+75	7' L
R-2	102+25	℄
R-3	201+00	℄
R-4	105+00	℄

ES 1 STA. 101+25, 34' RT.
METAL END SECTION
I.E. 923.00
75' OF 30" CSP

ES 2 STA. 102+00, 34' RT.
METAL END SECTION
I.E. 920.00

ES 3 STA. 104+25, 28' LT.
TYPE G INLET
T.G. 919.0
I.E. 916.33
61' OF 24" CSP

ES 4 STA. 104+25, 34' RT.
METAL END SECTION
I.E. 915.50

DENOTES SCARIFY AND MULCH. GRADE TO DRAIN.

NOTE 1: BUILDINGS HAVE BEEN DEMOLISHED BY OTHERS UNDER SEPARATE CONTRACT.

SCALE : 0 20 ft.

PREPARED BY
URS
CHARLESTON, WV

REVISION NUMBER	SHEET NUMBER	REVISION	DATE	BY

THE WEST VIRGINIA DEPARTMENT OF TRANSPORTATION
DIVISION OF HIGHWAYS

BORING LOCATIONS

P:\WOOD SCOTT SL48 BRIDGE\CADD\Structure\PLANS\8-15-07\rdg_bor_scottslab.dgn
8/17/2007 12:37 PM

Public Roads Div.	State Dist. No.	State Project No.	Federal Project No.	Fiscal Year	Station To Station	Sheet No.	Total Sheets
W.V.	04	S317 -12- 0.89 00	BR-0012 (042)E	2006	99+50 to 104+50	35	93

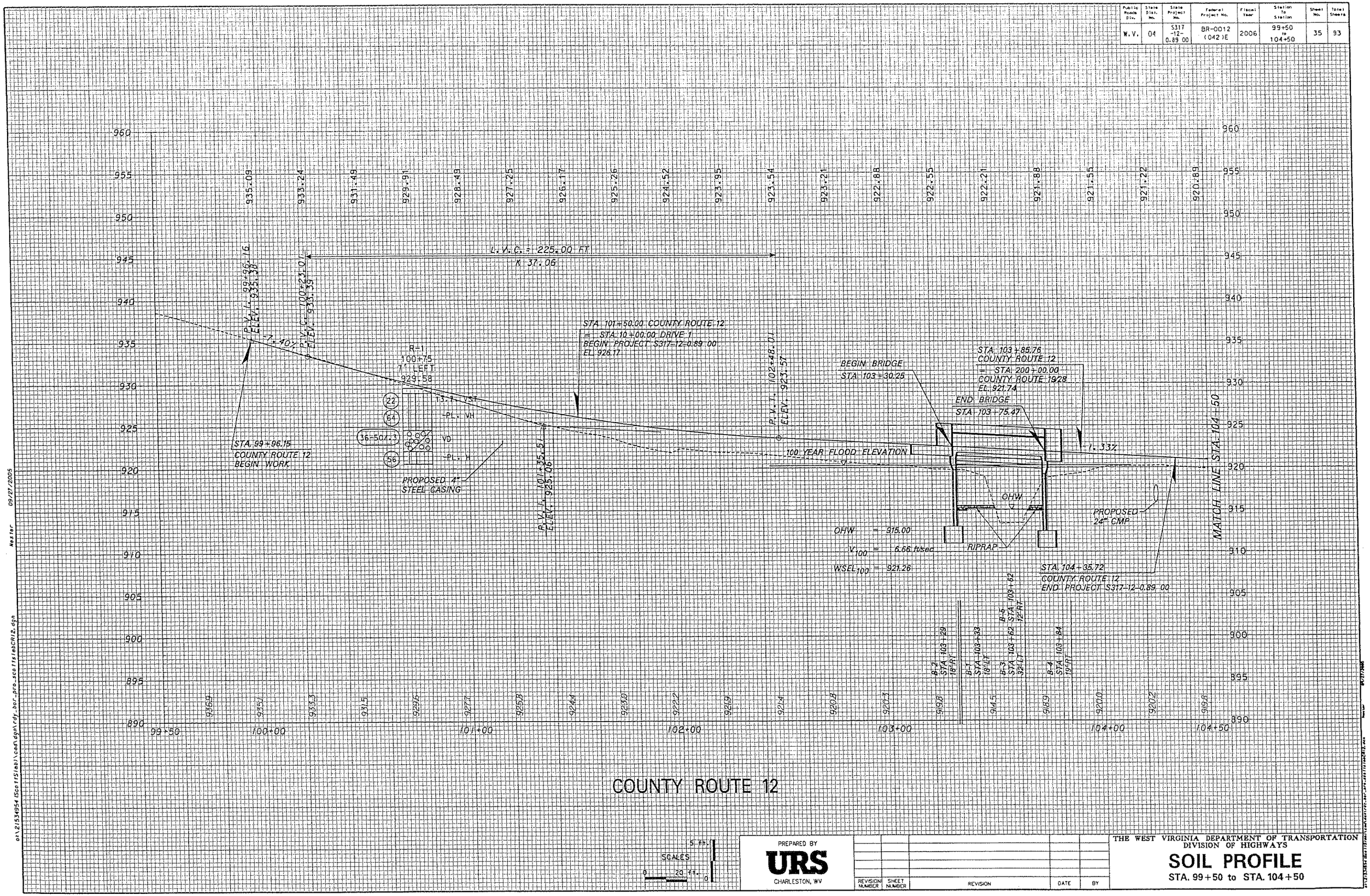

SCALES
5 Ft.
20 Ft.

PREPARED BY
URS
CHARLESTON, WV

REVISION NUMBER	SHEET NUMBER	REVISION	DATE	BY

THE WEST VIRGINIA DEPARTMENT OF TRANSPORTATION
DIVISION OF HIGHWAYS

SOIL PROFILE

STA. 99+50 to STA. 104+50

o:\21534954 (Sco115lab)\cad\dgn\rdy_bor_pro_sco115labCR12.dgn Nestor 09/27/2005

Public Roads Div.	State Dist. No.	State Project No.	Federal Project No.	Fiscal Year	Station To Station	Sheet No.	Total Sheets
W.V.	04	S317 -12- 0.89 00	BR-0012 (042)E	2006	104+50 to 106+00	36	93

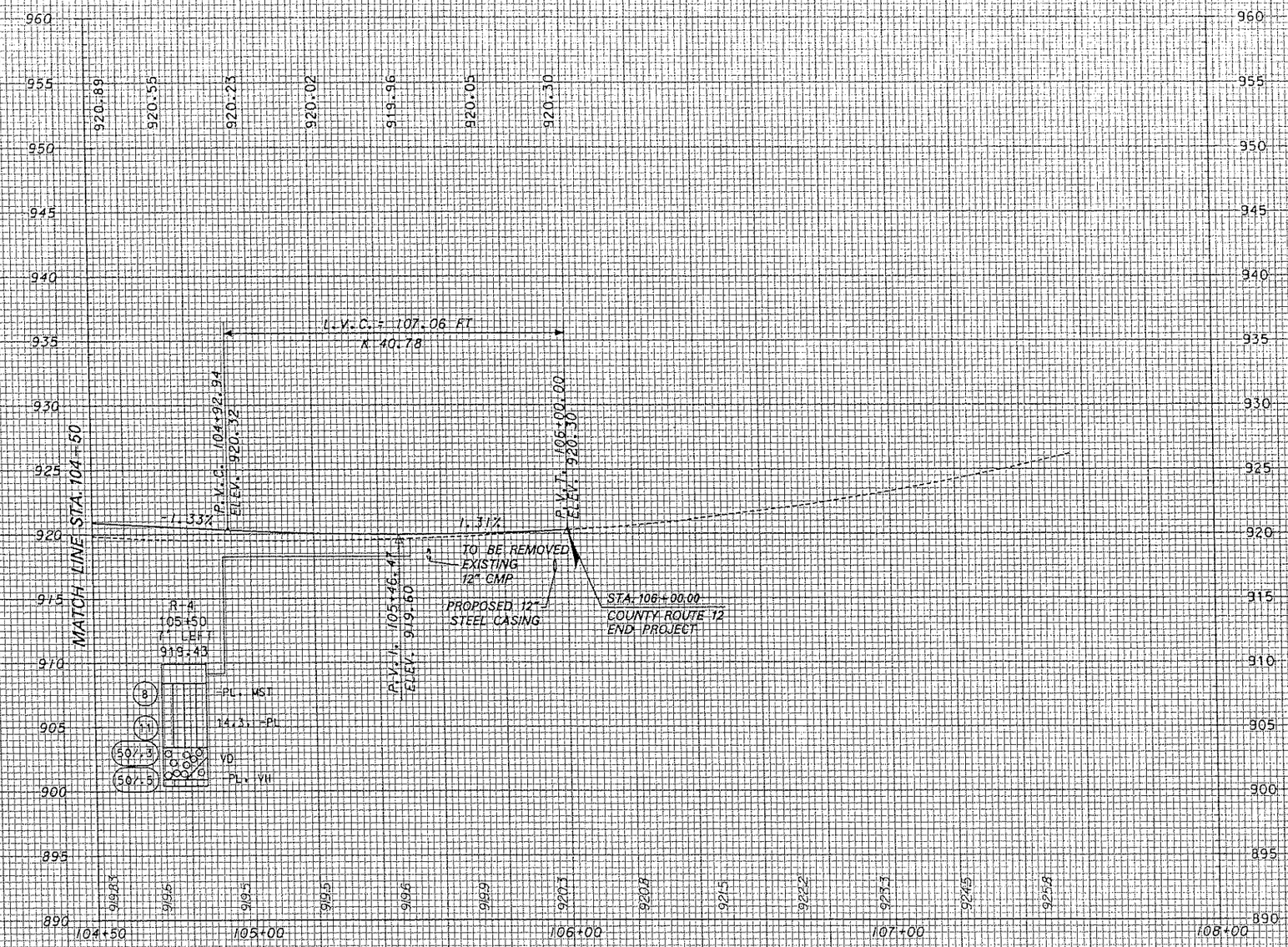

COUNTY ROUTE 12

SCALES
5 ft.
0 20 ft. 0

PREPARED BY
URS
CHARLESTON, WV

REVISION NUMBER	SHEET NUMBER	REVISION	DATE	BY

THE WEST VIRGINIA DEPARTMENT OF TRANSPORTATION
DIVISION OF HIGHWAYS

SOIL PROFILE

STA. 104+50 to STA. 106+00

Nester 09/27/2005

o:\21534954 (Scott Stab)\cad\dgn\rdy_bar_pro_scottstabCR12_2.dgn

PROJECT NUMBERS		DISTRICT	COUNTY	SHEET NO.	TOTAL SHTS.
STATE	FEDERAL				
S317-12-0.89 00	BR-0012(042)E	4	HARRISON	37	93

INDEX OF DRAWINGS

DESCRIPTION	SHEET NO.
GENERAL PLAN & ELEVATION	B1
GENERAL NOTES - 1	B2
GENERAL NOTES - 2	B3
ESTIMATE OF BRIDGE QUANTITIES	B4
FOUNDATION LAYOUT & RIPRAP DETAILS	B5
ABUTMENT 1 PLAN & ELEVATION	B6
ABUTMENT 1 FOOTING PLAN & DETAILS	B7
ABUTMENT 1 DIAPHRAGM	B8
ABUTMENT 2 PLAN & ELEVATION	B9
ABUTMENT 2 FOOTING PLAN & DETAILS	B10
ABUTMENT 2 DIAPHRAGM	B11
WINGWALL C & D SECTIONS	B12
ABUTMENT REINFORCING STEEL BAR SCHEDULE	B13
FRAMING PLAN	B14
GIRDER ELEVATIONS & DETAILS	B15
GIRDER & DIAPHRAGM DETAILS	B16
BEARING DETAILS	B17
CAMBER TABLE	B18
DECK PLAN & SUPERSTRUCTURE REINFORCING STEEL BAR SCHEDULE	B19
TYPICAL DECK SECTION & DETAILS	B20
FINISHED DECK ELEVATIONS & STAY-IN-PLACE FORM DETAILS	B21
APPROACH SLAB DETAILS - 1	B22
APPROACH SLAB DETAILS - 2	B23
APPROACH SLAB DETAILS - 3	B24
SITUATION PLAN	B25
CORE BORINGS - 1	B26
CORE BORINGS - 2	B27
LOAD RATINGS	B28

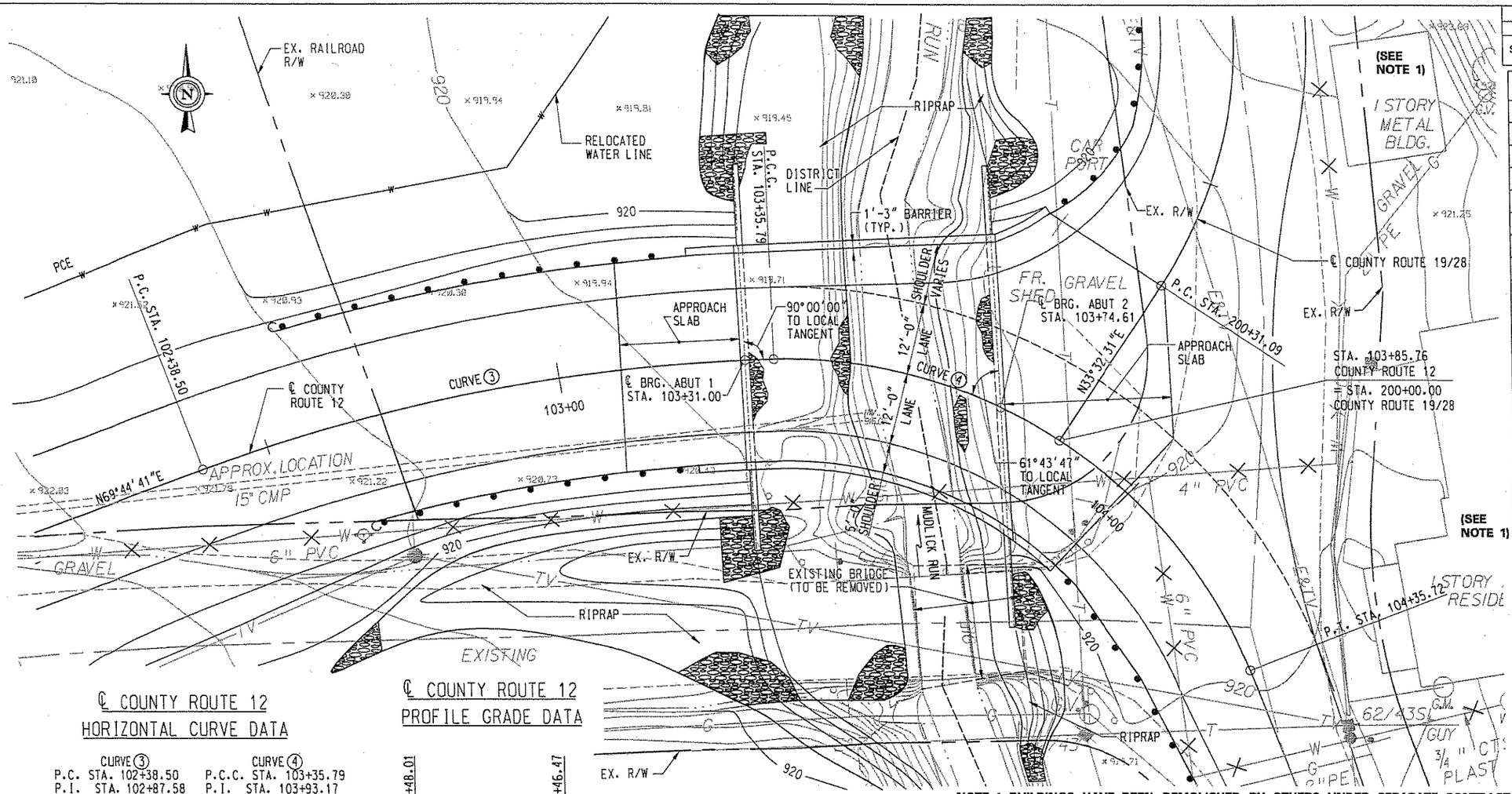

NOTE 1: BUILDINGS HAVE BEEN DEMOLISHED BY OTHERS UNDER SEPARATE CONTRACT.

PLAN
SCALE: 1" = 10'-0"

℄ COUNTY ROUTE 12 HORIZONTAL CURVE DATA

CURVE 3	CURVE 4
P.C. STA. 102+38.50	P.C.C. STA. 103+35.79
P.I. STA. 102+87.58	P.I. STA. 103+93.17
P.C.C. STA. 103+35.79	P.T. STA. 104+35.72
R = 300'	R = 81.29'

℄ COUNTY ROUTE 12 PROFILE GRADE DATA

P.V.T. STA. 102+48.01 ELEV. 923.57
-1.33%
P.V.I. STA. 105+46.47 ELEV. 919.60

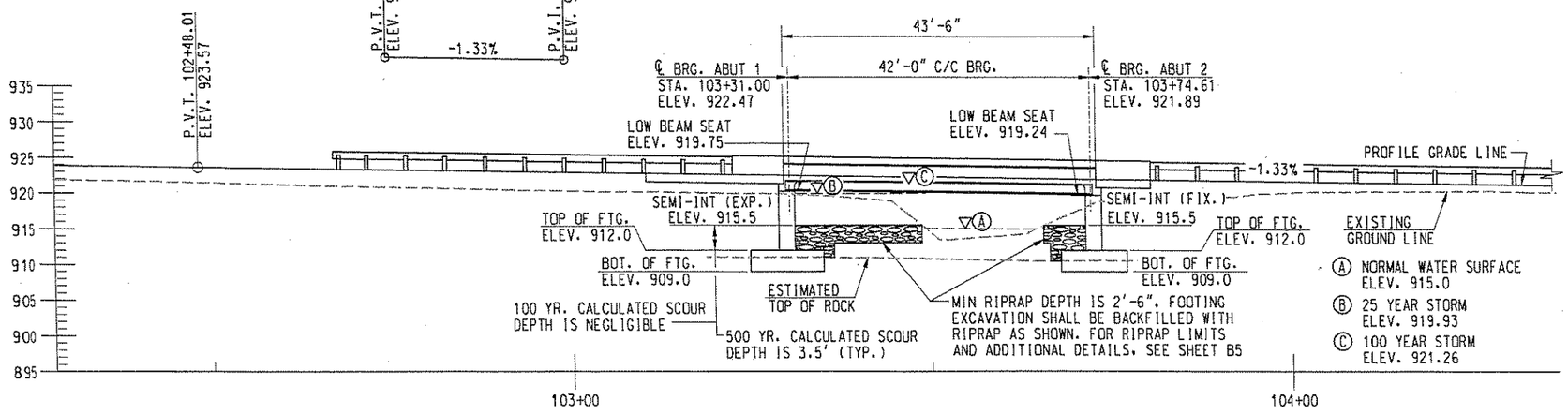

ELEVATION
SCALE: 1" = 10'-0"

NO.	REVISION	DATE:	BY:

W. V. DEPARTMENT OF TRANSPORTATION
DIVISION OF HIGHWAYS - ENGINEERING DIVISION

SCOTT SLAB BRIDGE REPLACEMENT
BRIDGE NO. 10570
GENERAL PLAN & ELEVATION

DESIGNED	WJW	07-05
DRAWN	WJW	07-05
CHECKED	JML	07-05
CHECKED	JML	07-05

URS

SHEET B1 OF B28
BRIDGE NO. 10570

P:\WVDOH SCOTT SLAB BRIDGE\CADD\Structure\PLANS\P S & E Feb 15 2006\str_lay_scottslab.dgn 8/17/2007 1:23:15 PM

PROJECT NUMBERS STATE	FEDERAL	DISTRICT	COUNTY	SHEET NO.	TOTAL SHTS.
S317-12-0.89 00	BR-0012(042)E	4	HARRISON	38	93

GOVERNING SPECIFICATIONS

THE GOVERNING PROVISIONS APPLICABLE TO THIS PROJECT ARE THE WEST VIRGINIA DEPARTMENT OF TRANSPORTATION, DIVISION OF HIGHWAYS, STANDARD SPECIFICATIONS, ROADS AND BRIDGES, ADOPTED 2000, AS AMENDED BY THE SUPPLEMENTAL SPECIFICATIONS DATED JANUARY 1, 2003; THE CONTRACT PLANS; AND THE CONTRACT DOCUMENTS.

DESIGN

THE DESIGN CODE IS THE AASHTO "LRFD BRIDGE DESIGN SPECIFICATIONS", THIRD EDITION, DATED 2004 AND AS SUPPLEMENTED BY ANSI/AASHTO/AWS D1.5 BRIDGE WELDING CODE, 2002 (INCLUDING 2003 INTERIM REVISIONS).

THE BRIDGE IS DESIGNED FOR AN HL-93 LIVE LOAD CAPACITY, AS WELL AS FOR PERMANENT METAL DECK FORMS (15 P.S.F. INCLUDING CONCRETE) AND A 25 P.S.F. FUTURE WEARING SURFACE.

EARTHQUAKE FORCES ARE BASED ON THE REQUIREMENTS OF SEISMIC PERFORMANCE ZONE 1.

THE DECK SLAB HAS BEEN DESIGNED IN ACCORDANCE WITH THE EMPIRICAL DESIGN PROCESS INCLUDED IN THE AASHTO "LRFD BRIDGE DESIGN SPECIFICATIONS."

THE SUPERSTRUCTURE HAS BEEN DESIGNED AS A COMPOSITE SECTION. ¼" OF CONCRETE DECK SLAB THICKNESS HAS BEEN REMOVED FROM SECTION PROPERTIES FOR THE DESIGN TO PROVIDE FOR GRINDING, GROOVING AND SACRIFICAL SURFACE.

DESIGN DATA

CONCRETE:

CLASS B f'c = 3,000 psi MODULAR RATIO = 9
CLASS D f'c = 2,000 psi (FOUNDATION PROTECTION, MODULAR RATIO NOT APPLICABLE)
CLASS K f'c = 4,000 psi MODULAR RATIO = 8
CLASS H f'c = 4,000 psi MODULAR RATIO = 8

STRUCTURAL STEEL:

AASHTO M 270 GRADE HPS70W Fy = 70,000 psi
AASHTO M 270 GRADE 50W Fy = 50,000 psi

REINFORCING STEEL:

AASHTO M-31 GRADE 60 Fy = 60,000 psi

SUPERSTRUCTURE DIMENSIONS ARE SHOWN FOR A NORMAL TEMPERATURE OF 65 DEGREES FAHRENHEIT.

CONCRETE (CAST-IN-PLACE)

CONCRETE SHALL BE CURED IN ACCORDANCE WITH SUBSECTION 601.12 OF THE STANDARD SPECIFICATIONS. IF USED, POLYETHYLENE COATED BURLAP SHALL CONFORM TO THE REQUIREMENTS OF SUBSECTION 707.6 OF THE STANDARD SPECIFICATIONS.

THE MINIMUM COVERING, MEASURED FROM THE SURFACE OF THE CONCRETE TO THE FACE OF ANY REINFORCING STEEL BAR, SHALL BE 3 INCHES IF THE CONCRETE IS IN CONTACT WITH THE GROUND SURFACE AND 2 INCHES OTHERWISE, EXCEPT AS SPECIFIED DIFFERENTLY ON THE PLANS.

SUBSTRUCTURE CONCRETE (CAST-IN-PLACE)

ALL CONCRETE IN SUBSTRUCTURE SHALL BE CLASS B AIR ENTRAINED EXCEPT FOR THE END DIAPHRAGMS WHICH SHALL BE CLASS H AIR ENTRAINED.

CHAMFER ALL EXPOSED EDGES OF THE SUBSTRUCTURE CONCRETE 1 INCH, EXCEPT FOR THE END DIAPHRAGMS, WHICH SHALL BE CHAMFERED ¾ INCH.

THE EXPOSED SURFACE OF THE SUBSTRUCTURE SHALL BE CLASS 1, ORDINARY SURFACE FINISH, IN ACCORDANCE WITH SUBSECTION 601.11.1 OF THE STANDARD SPECIFICATIONS.

THE BEARING SEAT UPON WHICH THE BEARING DEVICES WILL BE SET, SHALL BE FINISHED TO TRUE ELEVATIONS AS SHOWN ON THE PLANS.

SUPERSTRUCTURE CONCRETE (CAST-IN-PLACE)

ALL CONCRETE IN THE SUPERSTRUCTURE SHALL BE CLASS H, AIR ENTRAINED EXCEPT FOR THE BARRIERS WHICH SHALL BE CLASS K, AIR ENTRAINED.

CHAMFER ALL EXPOSED EDGES OF THE BARRIER AND DECK ¾ INCH.

THE EXPOSED SURFACES OF THE BARRIER SHALL BE CLASS 2, RUBBED FINISH, IN ACCORDANCE WITH SUBSECTION 601.11.2 OF THE STANDARD SPECIFICATIONS. THE BRIDGE DECK SHALL BE FINISHED IN ACCORDANCE WITH SUBSECTION 601.11.4 OF THE STANDARD SPECIFICATIONS.

THE DECK SHALL BE CONSTRUCTED WITH A STAY-IN-PLACE FABRICATED METAL FORMING SYSTEM IN ACCORDANCE WITH SUBSECTION 601.8.9 OF THE STANDARD SPECIFICATIONS.

JOINT FILLER

PREFORMED JOINT FILLER FOR CONCRETE SHALL BE SPONGE RUBBER IN ACCORDANCE WITH SUBSECTION 708.1 OF THE STANDARD SPECIFICATIONS.

REINFORCING STEEL BARS

ALL REINFORCING STEEL BARS SHALL BE INTERMEDIATE GRADE BILLET STEEL IN ACCORDANCE WITH SUBSECTION 709.1 OF THE STANDARD SPECIFICATIONS. THE REQUIREMENTS OF SECTION 602 OF THE STANDARD SPECIFICATIONS SHALL BE FOLLOWED.

ALL REINFORCING STEEL BARS WITH SUFFIX "E" IN THE PLANS SHALL BE EPOXY COATED.

THE MINIMUM SPLICE LENGTH OR DOWEL BAR EMBEDMENT SHALL BE 40 BAR DIAMETERS, UNLESS NOTED OTHERWISE.

WELDING OF REINFORCING STEEL BARS DURING FABRICATION OR CONSTRUCTION IS NOT PERMITTED UNLESS SPECIFIED.

STRUCTURAL STEEL

ALL STRUCTURAL STEEL INCLUDING STIFFENERS, CONNECTION PLATES, DIAPHRAGM MEMBERS, SOLE PLATES FOR BEARINGS AND DRIP BARS SHALL MEET AASHTO M270 GRADE 50W, EXCEPT GIRDER FLANGES AND WEBS SHALL MEET AASHTO M270 GRADE HPS70W.

ANCHOR BOLTS, NUTS AND WASHERS SHALL MEET THE REQUIREMENTS OF AASHTO M314-90, GRADE 55 AND SHALL BE HOT DIP GALVANIZED ACCORDING TO AASHTO M111.

HIGH STRENGTH FASTENERS SHALL MEET SECTION 709.24 AND SHALL BE BLACK (UNCOATED) TYPE 3 (WEATHERING STEEL). THE HIGH STRENGTH FASTENERS USED IN REGIONS OF THE STRUCTURE THAT REQUIRE PAINTING SHALL BE TYPE 1 OR 3 AND SHALL BE MECHANICALLY GALVANIZED.

THE FABRICATOR'S SHOP DRAWINGS SHALL IDENTIFY THE MATERIAL SPECIFICATION AND GRADE FOR EACH ITEM AND ARE SUBJECT TO APPROVAL OF THE ENGINEER.

BEFORE ASSEMBLING THE HIGH STRENGTH BOLT CONNECTIONS, REMOVE ALL LOOSE AND NON-ADHERENT RUST THAT MAY HAVE FORMED ON THE CONNECTION AREAS BY HAND OR POWER WIRE BRUSHING.

BOLTED CONNECTIONS ARE DESIGNED AS SLIP CRITICAL JOINTS WITH ALL FAYING SURFACES HAVING A CLASS B SURFACE CONDITION FACTOR.

BOLTS SHALL BE STORED ON SITE PRIOR TO USE IN WATERPROOF CONTAINERS. THE USE OF TARPS IS NOT PERMITTED.

DETAIL THE BEARING STIFFENERS AND GIRDER ENDS SUCH THAT THEY ARE PLUMB AFTER DEAD LOAD DEFLECTION OF THE STRUCTURE.

DO NOT USE THE ELECTROSLAG OR ELECTROGAS WELDING PROCESS.

DO NOT FIELD WELD ON ANY PART OF THE STRUCTURE WITHOUT PRIOR WRITTEN APPROVAL FROM THE ENGINEER, UNLESS SHOWN ON THE PLANS.

STEEL STUD SHEAR CONNECTORS

THE WELDED SHEAR STUDS SHALL BE IN ACCORDANCE WITH SECTION 615.3.3, EXCEPT AS FOLLOWS:

THE CONTRACTOR MAY SHOP INSTALL SHEAR STUDS TO THE BEAM OR GIRDER FOR THE PURPOSE OF ATTACHING A WORKER FALL PROTECTION SYSTEM. ONLY THE SHEAR STUDS REQUIRED TO PROPERLY INSTALL AND SUPPORT THE WORKER FALL PROTECTION SYSTEM MAY BE INSTALLED IN THE SHOP. THE REMAINING SHEAR STUDS FOR AN INDIVIDUAL ROW ACCROSS THE BEAM OR GIRDER FLANGE MAY ALSO BE INSTALLED IN THE SHOP. ALL SHOP INSTALLED SHEAR STUDS SHALL BE SHOWN ON THE SHOP DRAWINGS.

BLAST CLEANING AND PAINTING

UPON COMPLETION OF ALL FABRICATION OPERATIONS IN THE SHOP, AND BEFORE SHIPMENT TO THE PROJECT SITE, ALL WEATHERING STEEL BRIDGE COMPONENTS SHALL BE BLAST CLEANED TO A NEAR WHITE SURFACE CONDITION ACCORDING TO SSPC-SP 10. PRIOR TO THE START OF ANY BLAST CLEANING, ALL OIL, GREASE, CUTTING FLUIDS, OR OTHER FOREIGN MATTER SHALL BE REMOVED FROM THE SURFACE OF THE STEEL BY SOLVENT CLEANING ACCORDING TO SSPC-SP 1.

THE MEMBERS OR PORTIONS OF MEMBERS LISTED BELOW SHALL BE BLAST CLEANED AND SHOP PAINTED ACCORDING TO SECTION 688 OF THE STANDARD SPECIFICATIONS,"PAINTING STEEL STRUCTURES", USING THE ZINC RICH, LOW VOC SYSTEM, SECTION 711.22. APPLY THE FULL PAINT SYSTEM IN THE FABRICATION SHOP, EXCEPT FAYING SURFACES OF HIGH STRENGTH BOLTED CONNECTIONS, WHICH SHALL BE SHOP PAINTED WITH PRIMER ONLY. THE COLOR OF THE FINAL TOP COAT SHALL BE 20062 ACCORDING TO FEDERAL STANDARD 595 AND THE GLOSS AT ANGLE OF 60 DEGREES SHALL NOT EXCEED 25. PAINT THE ENDS OF THE GIRDERS AND ALL OTHER STRUCTURAL COMPONENTS ENCASED IN THE CONCRETE ABUTMENT PLUS ONE ADDITIONAL FOOT IN LENGTH.

PREPARE AND PAINT THE GALVANIZED MATERIAL BELOW THE BOTTOM OF THE DECK EXCEPT FOR SIP METAL DECK FORMS IN ACCORDANCE WITH PAINT MANUFACTURER'S SPECIFICATIONS. THE COLOR OF THE FINAL TOP COAT SHALL BE 20062 IN ACCORDANCE WITH FEDERAL STANDARD 595. THE EXPOSED SURFACES OF THE GALVANIZED STEEL PORTIONS OF THE BEARINGS SHALL BE PAINTED.

BLAST CLEANING AND PAINTING (CON'T)

AREAS OF THE SHOP APPLIED PAINT SYSTEM WHICH ARE DAMAGED DURING ERECTION AND HIGH STRENGTH BOLTED CONNECTION AREAS THAT WERE ONLY PRIME PAINTED SHALL BE PROPERLY CLEANED AND PAINTED ACCORDING TO SECTION 688 OF THE STANDARD SPECIFICATIONS, "PAINTING STEEL STRUCTURES", AND TO THE SATISFACTION OF THE ENGINEER.

AFTER COMPLETION OF ALL TIGHTENING OPERATIONS, MECHANICALLY GALVANIZED FASTENERS SHALL BE SOLVENT CLEANED AND FIELD PAINTED AS SPECIFIED FOR THE STRUCTURAL STEEL.

THE CREVICE BETWEEN THE EMBEDDED STEEL AND THE CONCRETE AT THE SEMI-INTEGRAL ABUTMENTS SHALL BE SUITABLY CHAMFERED TO PROVIDE FOR PLACEMENT OF A SEALANT. SEAL THE CREVICE WITH A SEALANT MATERIAL MEETING THE REQUIREMENTS OF ASTM C920, TYPE S, GRADE NS, CLASS 25, USES NT AND M. SEALANT SHALL BE SUITABLE FOR BONDING BETWEEN CONCRETE AND THE TOP COAT OF THE SPECIFIED PAINT SYSTEM. ACID-CURE SEALANTS ARE NOT ALLOWED.

IDENTIFICATION MARKING STEEL MEMBERS

ALL STEEL MILL AND FABRICATOR IDENTIFICATION MARKINGS FOR STEEL PLATES, SHAPES, OR FABRICATED MEMBERS SHALL BE BY METAL TAGS, SOAPSTONE, OR SOME OTHER READILY REMOVABLE MATERIAL; OR, SHALL BE MARKED IN AN AREA OF THE COMPLETED MEMBER WHICH WILL BE ENCASED OR COVERED WITH CONCRETE. MARKING METHODS AND LOCATIONS ARE SUBJECT TO APPROVAL OF THE ENGINEER. DO NOT USE PAINT OR WAX-BASED CRAYONS FOR MARKING.

HANDLING AND STORING STEEL MEMBERS

STEEL MEMBERS MUST NOT BE GOUGED, SCRATCHED, DENTED, OR ALLOWED TO RUB AGAINST OTHER MEMBERS THAT WOULD RESULT IN DAMAGE TO THE BLAST CLEANED PROFILE OF THE STEEL. MEMBERS SHALL BE HANDLED USING SOFTENERS AND SLINGS INSTEAD OF CHOKERS AND CHAINS.

STORE MEMBERS IN THE FABRICATION SHOP AND ON THE PROJECT SITE IN SUCH A MANNER AS TO BE KEPT FREE AND CLEAN OF ALL FOREIGN SUBSTANCES SUCH AS GREASE, OIL, MORTAR AND CONCRETE, SPLATTER, CHALK AND CRAYON MARKS, PAINT, AND DIRT. ALL STORAGE MUST BE ABOVE GROUND AND SLOPED TO ALLOW FREE DRAINAGE OF MELTED SNOW, RAINWATER, AND DEW. IF THE MEMBERS ARE STORED FOR PERIODS LONGER THAN THREE MONTHS, THE MEMBER MUST BE PLACED ON METAL SUPPORTS. FOR PERIODS OF STORAGE UP TO 3 MONTHS, MEMBERS MAY BE PLACED ON CLEAN, UNTREATED, WOOD TIMBERS.

STORE PLATE GIRDERS WITH THE WEB IN THE UPRIGHT POSITION.THE MEMBERS MAY BE STACKED PROVIDED METAL OR WOOD SUPPORTS, AS NOTED ABOVE, SEPARATE INDIVIDUAL MEMBERS. UNDER NO CIRCUMSTANCES SHALL MEMBERS BE NESTED TOGETHER OR BUNDLED.

DO NOT ALLOW TREATED LUMBER OR TREATED TIMBER TO CONTACT STEEL MEMBERS. CONTACT WITH CLEAN, UNTREATED LUMBER OR TIMBER WILL NOT DAMAGE THE STEEL MEMBERS.

FINAL CLEANUP OF STRUCTURAL STEEL SURFACES

UPON COMPLETION OF ALL CONCRETE CURING OPERATIONS, THE CONTRACTOR SHALL CLEAN ALL STEEL SURFACES TO REMOVE ALL GREASE, OIL, CONCRETE RESIDUE, DIRT, AND OTHER FOREIGN SUBSTANCES TO THE SATISFACTION OF THE ENGINEER.

CLEANING MAY BE BY HIGH PRESSURE WATER, POWER OR HAND WIRE BRUSHING, OR BY BRUSH-OFF BLAST CLEANING ACCORDING TO SSPC-SP 7. CLEANING SHALL BE FOLLOWED BY A CLEAN WATER RINSE TO REMOVE ALL RESIDUES OF DETERGENTS AND CLEANERS IF THEY WERE USED. ALL GREASE AND OIL SHALL BE REMOVED PRIOR TO THE CLEAN WATER RINSE BY SOLVENT CLEANING.

DO NOT USE ACIDS TO REMOVE STAINS.

NO.	REVISION	DATE:	BY:

DESIGNED WJW	DATE 07-05
DRAWN WJW	07-05
CHECKED JML	07-05
CHECKED JML	07-05

W. V. DEPARTMENT OF TRANSPORTATION
DIVISION OF HIGHWAYS - ENGINEERING DIVISION

SCOTT SLAB BRIDGE REPLACEMENT
BRIDGE NO. 10570
GENERAL NOTES - 1

URS

SHEET B2 OF B28
BRIDGE NO. 10570

PROJECT NUMBERS		DISTRICT	COUNTY	SHEET NO.	TOTAL SHTS.
STATE	FEDERAL				
S317-12-0.89 00	BR-0012(042)E	4	HARRISON	39	93

BEARINGS

ALL ELASTOMER SHALL BE GRADE 3, 60-DUROMETER HARDNESS IN ACCORDANCE WITH AASHTO LRFD BRIDGE CONSTRUCTION SPECIFICATIONS, SECTION 18. ALL INTERNAL STEEL PLATES SHALL BE ASTM A-1011, GRADE 36.

ANCHOR BOLTS SHALL BE CAST-IN-PLACE OR SET USING NON-SHRINK PORTLAND CEMENT GROUT IN PREFORMED HOLES OF THE SPECIFIED DIAMETER. DO NOT DRILL OR CORE ANCHOR BOLT HOLES. THE NON-SHRINK PORTLAND CEMENT GROUT SHALL CONFORM TO SECTION 705.5 OF THE STANDARD SPECIFICATIONS. USE THE GROUT IN STRICT ACCORDANCE WITH THE MANUFACTURER'S RECOMMENDATIONS. PLACE TEMPORARY COVERS OVER THE PREFORMED HOLES UNTIL THE ANCHOR BOLTS ARE INSTALLED. FORMED CONCRETE SURFACE SHALL BE SCARIFIED, CLEANED, SATURATED AND REMOVED OF STANDING WATER PRIOR TO INSTALLING AND GROUTING ANCHOR BOLTS.

ERECTION

THE CONTRACTOR'S ATTENTION IS DIRECTED TO SECTIONS 615.6, ERECTION, AND 615.2.2, ERECTION DRAWINGS, OF THE STANDARD SPECIFICATIONS.

THE EXISTING BRIDGE SHALL NOT BE USED AS A PLATFORM TO SET THE STEEL PLATE GIRDERS FOR THE NEW STRUCTURE.

PROTECTION OF CONCRETE SUBSTRUCTURE

BEFORE PLACING ANY STEEL SUPERSTRUCTURE MEMBERS ON THE CONCRETE SUBSTRUCTURE UNITS, THE CONTRACTOR SHALL COAT ALL EXPOSED AREAS OF THE ABUTMENT TOPS AND SIDES TO THE GROUND LINE ELEVATION WITH AN APPROVED SILANE BASED CONCRETE SEALER. PREPARATION OF SURFACES, APPLICATION RATES, AND METHODS SHALL BE AS RECOMMENDED BY THE SILANE MANUFACTURER.

THE CONTRACTOR SHALL TAKE APPROPRIATE MEASURES TO PROTECT THE CONCRETE SUBSTRUCTURE FROM RUST STAINING DURING CONSTRUCTION AND CURING OF SUPERSTRUCTURE CONCRETE. WATER RUNOFF FROM CONCRETE CURING OPERATIONS SHALL BE DEFLECTED AWAY FROM THE STEEL GIRDERS AND SHALL NOT DRAIN ONTO THE SUBSTRUCTURE CONCRETE AFTER CONTACTING THE WEATHERING STEEL.

UPON COMPLETION OF ALL SUPERSTRUCTURE CONCRETE CURING OPERATIONS, THE CONTRACTOR SHALL REMOVE ALL RUST STAINS FROM SUBSTRUCTURE UNITS USING PROPRIETARY CHEMICAL STAIN REMOVERS OR MILD ACID ETCHING. ABRASIVE BLAST CLEANING MAY BE USED TO SUPPLEMENT THE OTHER CLEANING METHODS IF THE STAINED AREAS ARE SEVERE OR EXTENSIVE. ALL CLEANING METHODS SHALL BE SUBJECT TO APROVAL OF THE ENGINEER.

RE-COAT ALL AREAS WHERE RUST STAINS WERE REMOVED, REGARDLESS OF THE CLEANING METHOD USED, WITH AN APPROVED SILANE BASED CONCRETE SEALER AS SPECIFIED ABOVE.

STRUCTURE EXCAVATION

STRUCTURE EXCAVATION QUANTITIES SHALL BE MEASURED AND CLASSIFIED AS SHOWN ON THE PLANS.

THE CONTRACTOR SHALL PROTECT THE FOUNDATION SUBGRADE FROM WEATHERING IMMEDIATELY AFTER EXCAVATION AND ACCEPTANCE BY THE ENGINEER WITH 2 TO 4 INCHES OF CLASS D CONCRETE.

ALL SUBSTRUCTURE CONCRETE IS TO BE PLACED IN THE DRY.

BACKFILL

THE CONTRACTOR SHALL BACKFILL AROUND SUBSTRUCTURE UNITS WITHIN 72 HOURS AFTER THE REMOVAL OF FORMS AND FALSEWORK AND SHALL SLOPE SURFACES TO DRAIN IN ACCORDANCE WITH SECTION 212 OF THE STANDARD SPECIFICATIONS.

SELECT MATERIAL FOR BACKFILLING SHALL BE PLACED TO THE DIMENSIONS SHOWN.

SCOUR PROTECTION

THE AVERAGE STONE SIZE FOR SCOUR PROTECTION FOR THIS BRIDGE IS 24 INCHES
THE ROCK FOR SCOUR PROTECTION SHALL BE UNIFORMLY GRADED AS FOLLOWS:

RIPRAP GRADATION

ROCK SIZE	% PASSING
24	100
12	15-50
6	0-15

THE STONE SHALL BE REASONABLY WELL GRADED THROUGHOUT THE SCOUR PROTECTION THICKNESS AS DETERMINED BY THE ENGINEER BY VISUAL INSPECTION. THE RIPRAP SHALL NOT CONTAIN MORE THAN 10% BY WEIGHT OF THE SMALLEST SIZE STONE. MATERIAL SHALL CONSIST OF ROCK OF A QUALITY SATISFACTORY TO THE ENGINEER.

CONSTRUCTION LOAD LIMITATIONS

THE BRIDGE DECK SHALL HAVE THE FOLLOWING CONSTRUCTION LOAD LIMITATIONS:

NO CONSTRUCTION EQUIPMENT WITH AN AXLE LOAD GREATER THAN 20,000 LB (20 KIPS) SHALL BE PERMITTED ON THE SLAB AT ANY TIME.

NO CONSTRUCTION EQUIPMENT OR LOADS THAT ARE NOT REQUIRED TO COMPLETE THE SLAB, PARAPETS OR OTHER APPURTENANCES SHALL BE ALLOWED ON THE BRIDGE DECK.

MAINTAINING TRAFFIC

TRAFFIC SHALL BE MAINTAINED IN ACCORDANCE WITH SECTION 636 AND SUBSECTION 104.5 OF THE STANDARD SPECIFICATIONS.

CONSTRUCTION WILL BE COMPLETED IN TWO PHASES. ALL CONSTRUCTION WILL BE COMPLETED IN PHASE 1, EXCEPT AS INDICATED AS PHASE 2 CONSTRUCTION ON THE PLANS.

REFER TO MOT PLANS FOR DETAILS AND SUGGESTED CONSTRUCTION SEQUENCE.

EXISTING STRUCTURE

THE EXISTING STRUCTURE SHALL BE DISMANTLED AND DISPOSED OF IN ACCORDANCE WITH SECTION 203 OF THE STANDARD SPECIFICATIONS.

EXISTING SUBSTRUCTURE UNITS SHALL BE REMOVED TO TWO FEET BELOW FINISHED GRADE.

SHOP DRAWINGS

ALL SHOP DRAWINGS WILL BE SUBJECT TO THE REQUIREMENTS OF SUBSECTION 105.2 OF THE STANDARD SPECIFICATIONS. SHOP DRAWINGS SHALL BE SUBMITTED DIRECTLY TO URS FOR REVIEW AT THE FOLLOWING ADDRESS:

URS CORPORATION
#4 MISSION WAY, SUITE 201
SCOTT DEPOT, WV 25560

SPECIAL PROVISIONS

THE FOLLOWING IS NOT A COMPLETE LIST OF SPECIAL PROVISIONS. SEE THE PROPOSAL FOR A LISTING OF ALL SPECIAL PROVISIONS.

SECTION 601 - STRUCTURAL CONCRETE, CLASS H BRIDGE DECKS
SECTION 615 - STEEL STRUCTURES
SECTION 615 - STEEL STRUCTURES, ELASTOMERIC BEARING ASSEMBLIES
SECTION 708 - JOINT MATERIALS, NEOPRENE SHEET FOR SEMI-INTEGRAL ABUTMENTS.

NO.	REVISION	DATE:	BY:

W. V. DEPARTMENT OF TRANSPORTATION
DIVISION OF HIGHWAYS - ENGINEERING DIVISION

SCOTT SLAB BRIDGE REPLACEMENT
BRIDGE NO. 10570
GENERAL NOTES - 2

DESIGNED WJW	DATE 07-05
DRAWN WJW	07-05
CHECKED JML	07-05
CHECKED JML	07-05

URS

SHEET B3 OF B28
BRIDGE NO. 10570

P:\WVDOH SCOTT SLAB BRIDGE\CADD\Structure\PLANS\P 5 & E Feb 19 2006\str_neg_scottslb2.dgn 8/14/2007 2:22:41 PM
J06C29C9B - BRIDGE B

PROJECT NUMBERS		DISTRICT	COUNTY	SHEET NO.	TOTAL SHTS.
STATE	FEDERAL				
S317-12-0.89 00	BR-0012(042)E	4	HARRISON	40	93

SUMMARY OF BRIDGE QUANTITIES

ITEM NUMBER	DESCRIPTION	UNIT	ABUT. 1	ABUT. 2	WINGWALLS	SUPER-STRUCTURE	APPROACH SLAB ABUT. 1	APPROACH SLAB ABUT. 2	TOTAL
203001-001	DISMANTLING STRUCTURE	LS	—	—	—	—	—	—	1
212001-001	STRUCTURE EXCAVATION	CY	71	88	87	—	—	—	246
212002-001	WET EXCAVATION	CY	103	141	138	—	—	—	382
212005-001	SELECT MATERIAL FOR BACKFILLING	CY	19	24	23	—	—	—	66
218001-001	RIPRAP	CY	70	50	342	—	—	—	462
601002-001	CLASS B CONCRETE	CY	66	89	65	—	—	—	220
601003-001	CLASS K CONCRETE	CY	—	—	—	7	2	2	11
601006-001	CLASS D CONCRETE	CY	3	4	3	—	—	—	10
601009-001	CLASS H CONCRETE	CY	4	6	—	52	—	—	62
602001-001	REINFORCING STEEL BAR	LB	4247	5691	5525	—	—	—	15463
602002-001	EPOXY COATED REINFORCING STEEL BAR	LB	1533	2076	—	16580	323	400	20912
615001-001	STEEL SUPERSTRUCTURE	LS	—	—	—	—	—	—	1
615029-001	NON-GUIDED BEARINGS, ELASTOMETRIC	EA	5	—	—	—	—	—	5
615030-001	FIXED BEARINGS, ELASTOMETRIC	EA	—	6	—	—	—	—	6
639001-001	CONSTRUCTION LAYOUT STAKE	LS	—	—	—	—	—	—	1

NOTES:

1. PAYMENT FOR ENGINEERING FABRIC SHALL BE INCLUDED IN ITEM 212005-001.
2. PAYMENT FOR WEEP DRAINS SHALL BE INCLUDED IN ITEM 601002-001.
3. PAYMENT FOR SILANE COATING, PROTECTING, CLEANING AND RE-COATING SUBSTRUCTURE UNITS SHALL BE INCLUDED IN ITEM 601002-001.
4. PAYMENT FOR PREFORMED JOINT FILLER SHALL BE INCLUDED IN EITHER ITEM 601002-001 OR ITEM 601009-001.
5. PAYMENT FOR MECHANICAL SPLICE CONNECTIONS SHALL BE INCLUDED IN ITEM 602001-001.
6. PAYMENT FOR BLAST CLEANING AND PAINTING AND FINAL CLEANUP OF STRUCTURAL STEEL SURFACES SHALL BE INCLUDED IN ITEM 615001-001.
7. PAYMENT FOR ELASTOMERIC BEARING SOLE PLATES AND ANCHOR BOLTS SHALL BE INCLUDED IN EITHER ITEM 615029-001 OR ITEM 615030-001.
8. A QUANTITY EQUAL TO A UNIFORM THICKNESS OF 1" OF CONCRETE OVER THE AREA OF THE STAY-IN-PLACE FORMS, MEASURED FROM THE EDGE OF FLANGE TO EDGE OF FLANGE, HAS BEEN INCLUDED IN ITEM 601009-001, TO ACCOUNT FOR CONCRETE IN THE FLUTES OF THE FORMS.
9. THE APPROACH SLAB CLASS K CONCRETE QUANTITIES ACCOUNT FOR THE BARRIERS ON THE APPROACH SLABS.
10. THE APPROACH SLAB EPOXY COATED REINFORCING STEEL BAR QUANTITIES ACCOUNT FOR THE REINFORCING IN THE BARRIERS ONLY. ALL OTHER APPROACH SLAB REINFORCING IS INCLUDED IN ITEM 502001-012.

ITEM 602001-001 REINFORCING STEEL BAR (LB.)

BAR SIZE	ABUT. 1	ABUT. 2	WINGWALLS	SUPERSTRUCTURE	APPROACH SLAB ABUT. 1	APPROACH SLAB ABUT. 2	TOTAL
4	99	132	132	—	—	—	363
5	4148	5559	5393	—	—	—	15100
6	-	-	-	—	—	—	-
TOTAL	4247	5691	5525	—	—	—	15463

ITEM 602002-001 EPOXY COATED REINFORCING STEEL BAR (LB.)

BAR SIZE	ABUT. 1	ABUT. 2	WINGWALLS	SUPERSTRUCTURE	APPROACH SLAB ABUT. 1	APPROACH SLAB ABUT. 2	TOTAL
3	—	—	—	148	-	5	153
4	—	5	—	4732	83	105	4925
5	171	236	—	2701	240	290	3638
6	1362	1835	—	8999	-	-	12196
7	-	-	—	—	-	-	-
8	-	-	—	—	-	-	-
TOTAL	1533	2076	—	16580	323	400	20912

ITEM 615001-001 STEEL SUPERSTRUCTURE
(FOR INFORMATION ONLY)

DESCRIPTION	UNIT	QUANTITY
AASHTO M-270, GRADE HPS70W STEEL	LB	25062
AASHTO M-270, GRADE 50W STEEL	LB	1203
STUD SHEAR CONNECTORS	LB	816
HIGH STRENGTH FASTENERS (BOLTS)	LB	31
DRIP BARS	LB	8
TOTAL	LB	27120

NO.	REVISION	DATE:	BY:

W. V. DEPARTMENT OF TRANSPORTATION
DIVISION OF HIGHWAYS - ENGINEERING DIVISION

SCOTT SLAB BRIDGE REPLACEMENT
BRIDGE NO. 10570
ESTIMATE OF BRIDGE QUANTITIES

DESIGNED LCI	DATE 07-05	
DRAWN WJW/ALR	07-05	
CHECKED RGS	07-05	
CHECKED RGS/JML	07-05	

URS

SHEET B4 OF B28
BRIDGE NO. 10570

P:\WVDOH SCOTT SLAB BRIDGE\CADD\Structure\PLANS\P S & E Feb 15 2006\str_rmq_scottslb3.dgn 8/14/2007 2:26:22 PM
J06C29C08 - BRIDGE b

PROJECT NUMBERS		DISTRICT	COUNTY	SHEET NO.	TOTAL SHTS.
STATE	FEDERAL				
S317-12-0.89 00	BR-0012(042)E	4	HARRISON	41	93

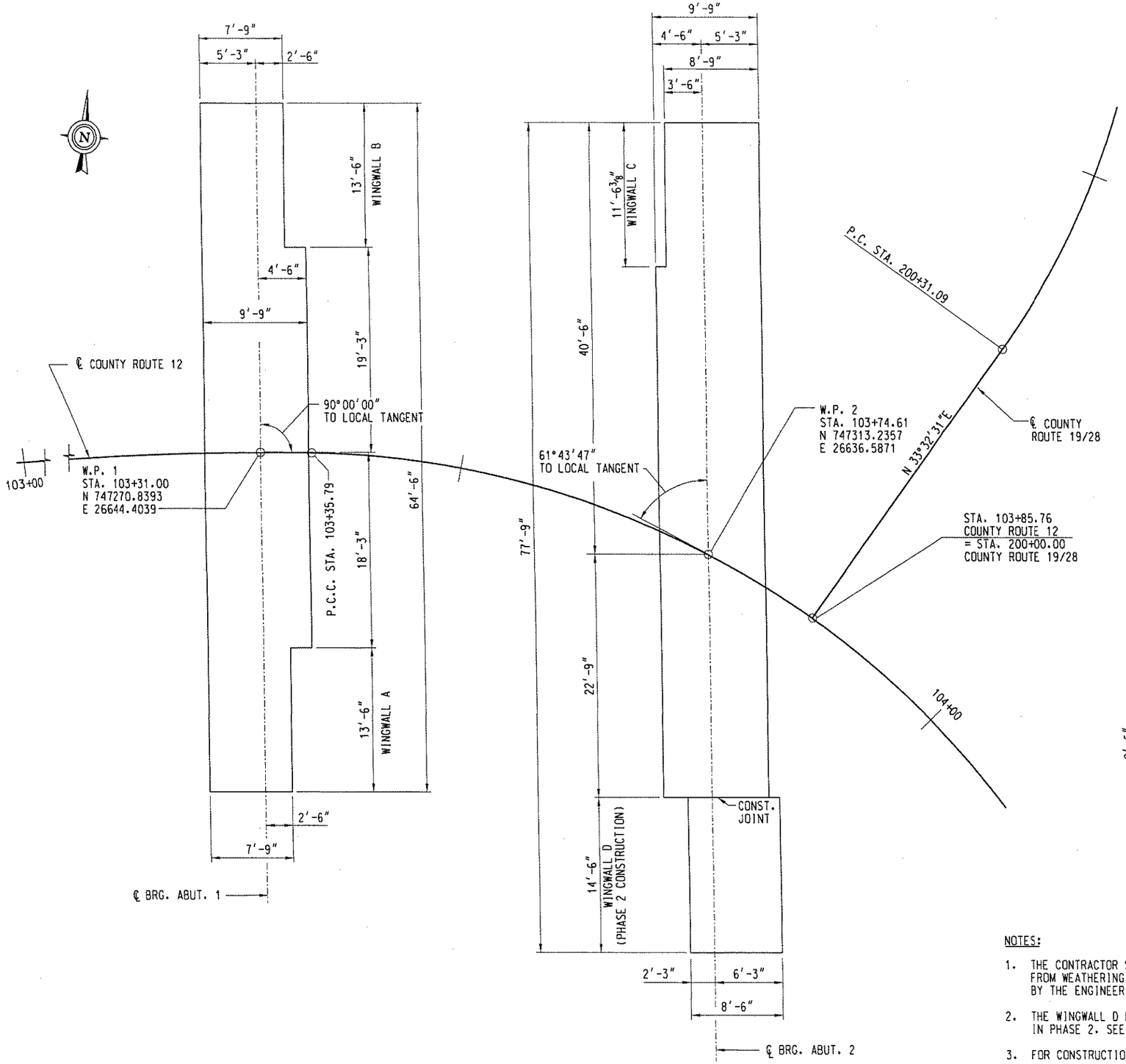

FOUNDATION LAYOUT PLAN
SCALE: 3/16" = 1'-0"

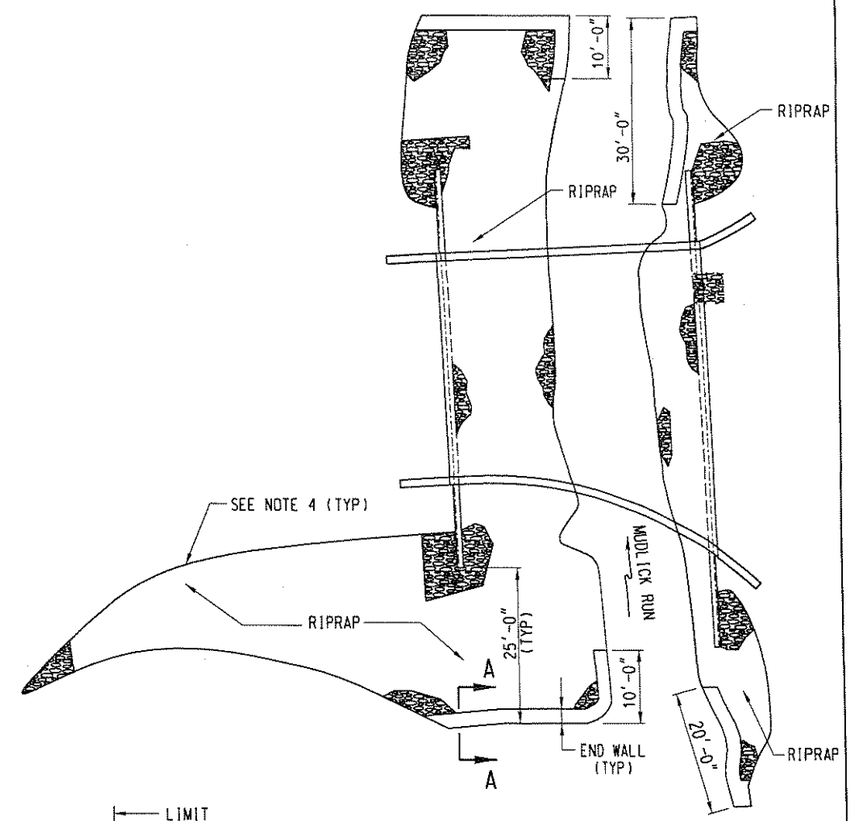

RIPRAP PLAN
NOT TO SCALE

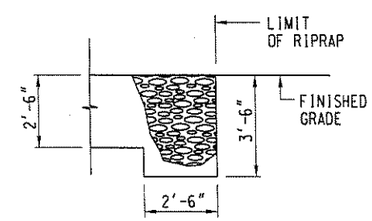

SECTION A-A
NOT TO SCALE

NOTES:

1. THE CONTRACTOR SHALL PROTECT THE FOUNDATION SUBGRADE FROM WEATHERING IMMEDIATELY AFTER EXCAVATION AND ACCEPTANCE BY THE ENGINEER WITH 2 TO 4 INCHES OF CLASS D CONCRETE.
2. THE WINGWALL D PORTION OF ABUTMENT 2 SHALL BE CONSTRUCTED IN PHASE 2. SEE SHEETS B9 AND B10 FOR DETAILS.
3. FOR CONSTRUCTION JOINT DETAIL, SEE SHEET B10.
4. UPPER LIMIT OF RIPRAP EXTENDS TO ELEV. 919.0

NO.	REVISION	DATE:	BY:

W. V. DEPARTMENT OF TRANSPORTATION
DIVISION OF HIGHWAYS - ENGINEERING DIVISION

SCOTT SLAB BRIDGE REPLACEMENT
BRIDGE NO. 10570
FOUNDATION LAYOUT
& RIPRAP DETAILS

DESIGNED	WJW	DATE 07-05
DRAWN	WJW	07-05
CHECKED	JML	07-05
CHECKED	JML	07-05

URS

SHEET B5 OF B28
BRIDGE NO. 10570

P:\WVDOH SCOTT SLAB BRIDGE\CADD\Structure\PLANS\P S & E Feb 15 2006\str_fdl_scottslb.dgn 8/14/2007 2:09:13 PM

PROJECT NUMBERS		DISTRICT	COUNTY	SHEET NO.	TOTAL SHTS.
STATE	FEDERAL				
S317-12-0.89 00	BR-0012(042)E	4	HARRISON	42	93

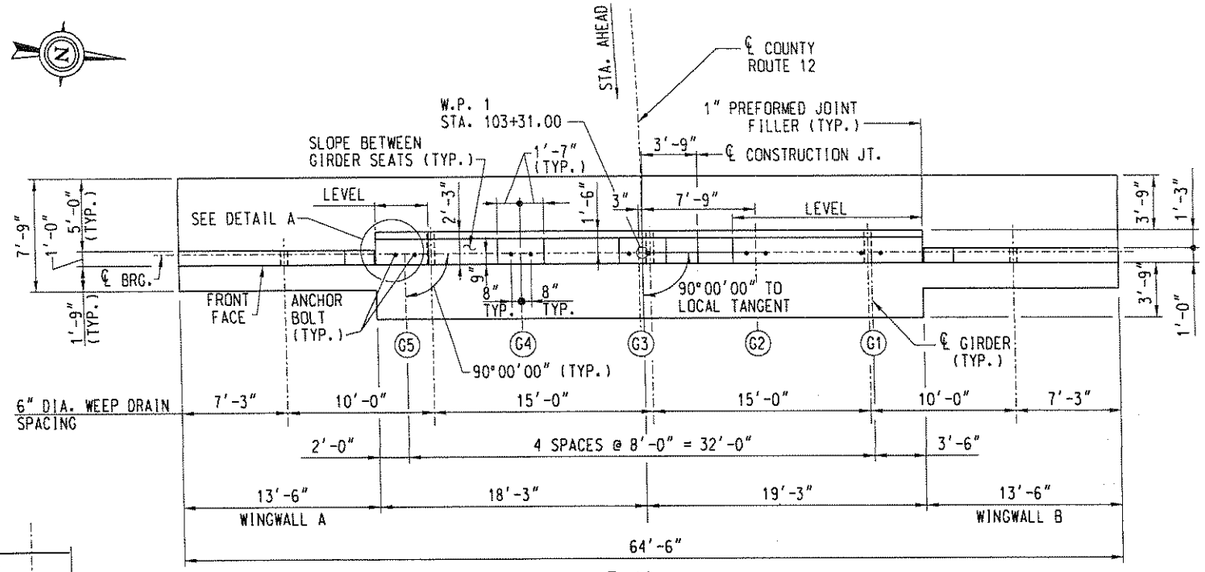

PLAN

SCALE: 3/16" = 1'-0"

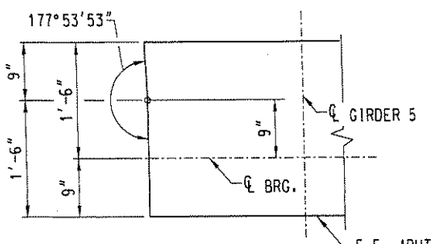

DETAIL A

SCALE: 1" = 1'-0"

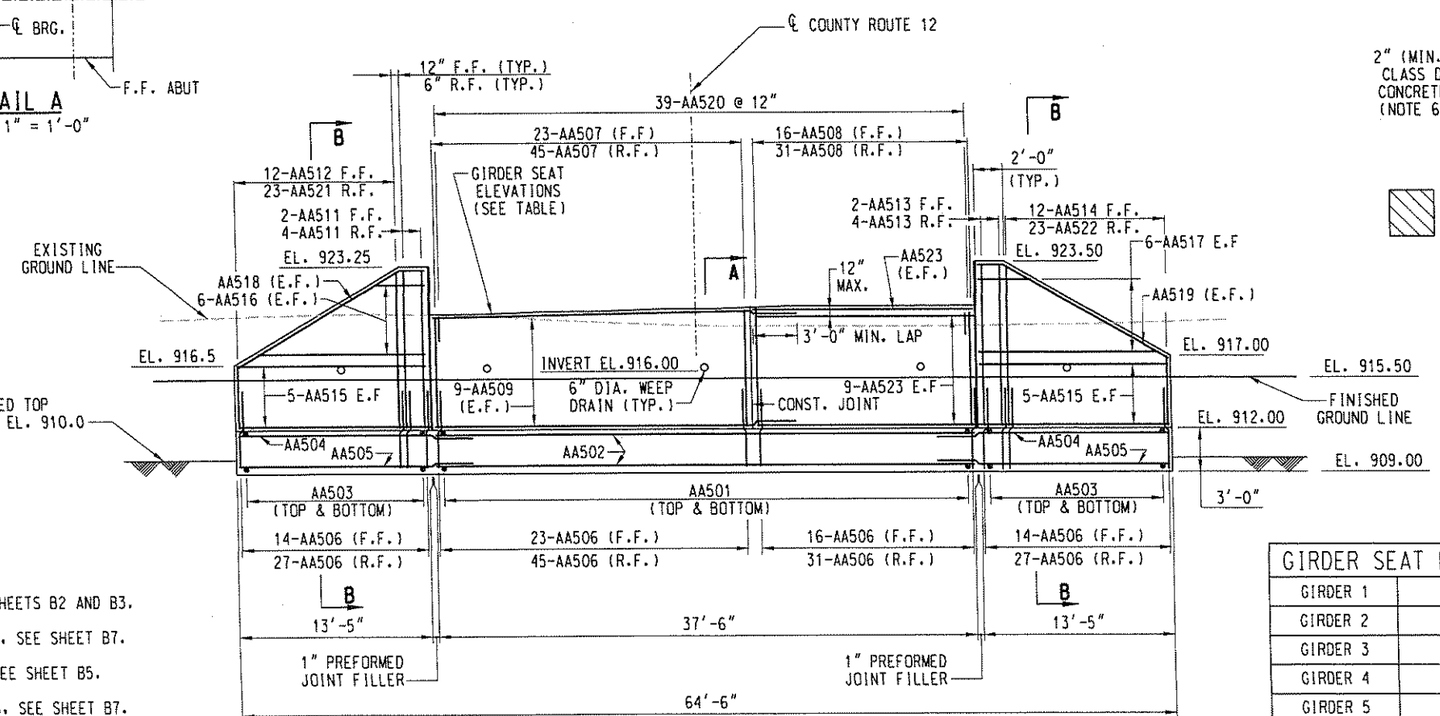

ELEVATION

SCALE: 3/16" = 1'-0"

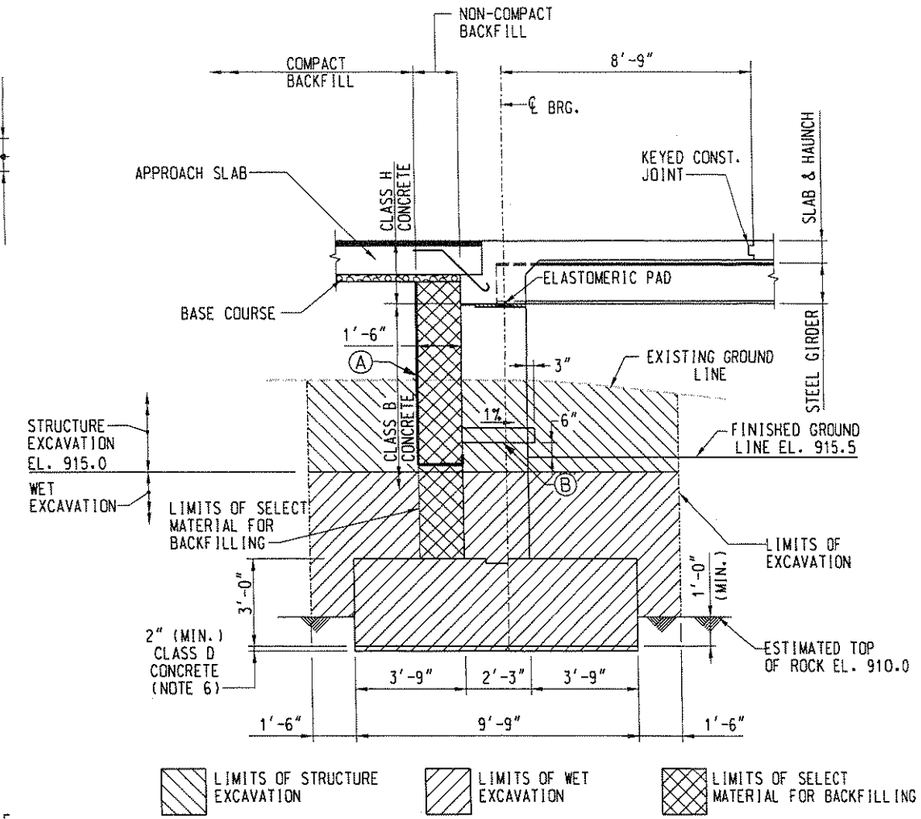

TYPICAL ABUTMENT 1 SECTION

SCALE: 3/8" = 1'-0"

(A) SELECT MATERIAL FOR BACKFILLING WRAPPED IN ENGINEERING FABRIC FOR SUBSURFACE DRAINAGE.

(B) 6" DIA. WEEP DRAIN

NOTES:

1. FOR GENERAL NOTES, SEE SHEETS B2 AND B3.
2. FOR ABUTMENT SECTION A-A, SEE SHEET B7.
3. FOR FOUNDATION LAYOUT, SEE SHEET B5.
4. FOR WINGWALL SECTION B-B, SEE SHEET B7.
5. FOR DIAPHRAGM DETAILS, SEE SHEET B8.
6. FOUNDATION SUBGRADE PROTECTION IS REQUIRED. SEE STRUCTURE EXCAVATION NOTES, SHEET B3.
7. FOR REINFORCING STEEL BAR SCHEDULE, SEE SHEET B13.
8. FOR FOOTING PLAN, SEE SHEET B7.
9. FOR WEEP DRAIN REINFORCING DETAIL, SEE SHEET B12.

GIRDER SEAT ELEVATIONS	
GIRDER 1	920.19
GIRDER 2	920.19
GIRDER 3	920.03
GIRDER 4	919.87
GIRDER 5	919.71

LEGEND:

F.F = FRONT FACE
R.F. = REAR FACE
E.F. = EACH FACE

NO.	REVISION	DATE:	BY:

W. V. DEPARTMENT OF TRANSPORTATION
DIVISION OF HIGHWAYS - ENGINEERING DIVISION

SCOTT SLAB BRIDGE REPLACEMENT
BRIDGE NO. 10570
ABUTMENT 1
PLAN & ELEVATION

DESIGNED	WJW	07-05
DRAWN	JFD	07-05
CHECKED	JML	07-05
CHECKED	JML	07-05

URS

SHEET B6 OF B28
BRIDGE NO. 10570

P:\WVDOH SCOTT SLAB BRIDGE\CADD\Structure\PLANSVP S & E Feb 15 2006\str_abt.scottslbl.dgn 8/14/2007 1:43:11 PM
J06C29C98 - BRIDGE b

PROJECT NUMBERS		DISTRICT	COUNTY	SHEET NO.	TOTAL SHTS.
STATE	FEDERAL				
S317-12-0.89 00	BR-0012(042)E	4	HARRISON	43	93

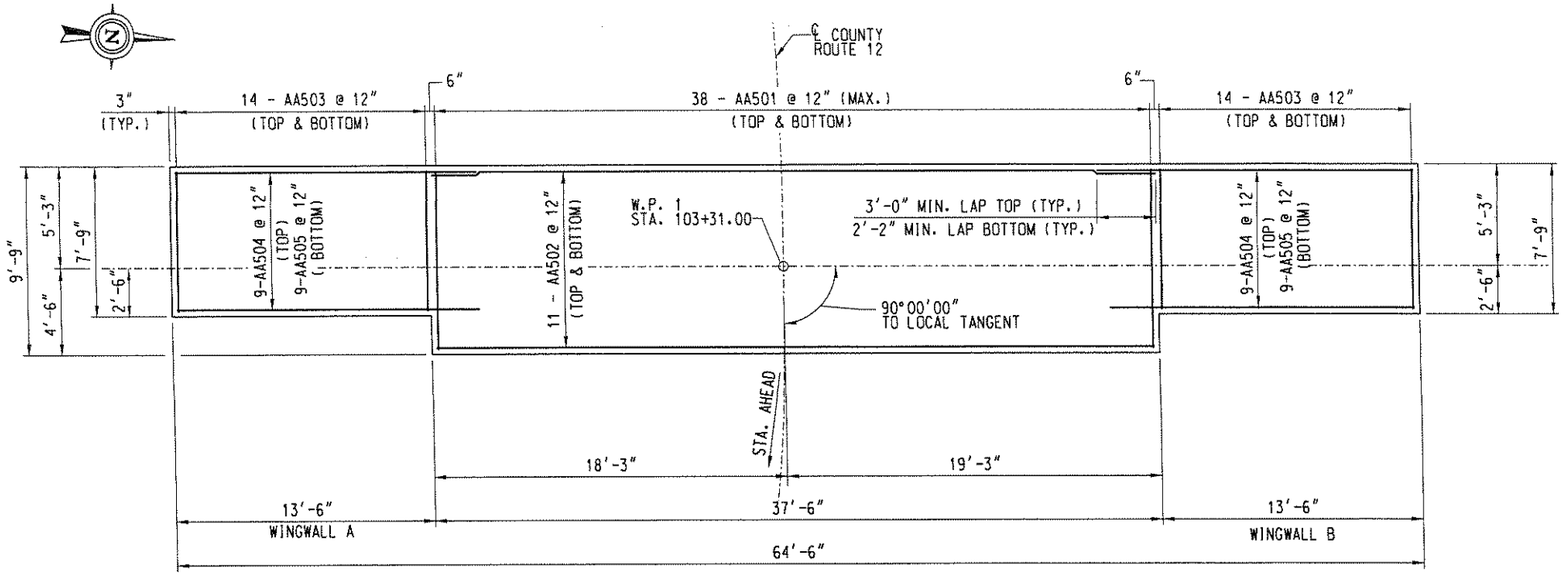

ABUTMENT 1 - FOOTING PLAN

SCALE: 1/4" = 1'-0"

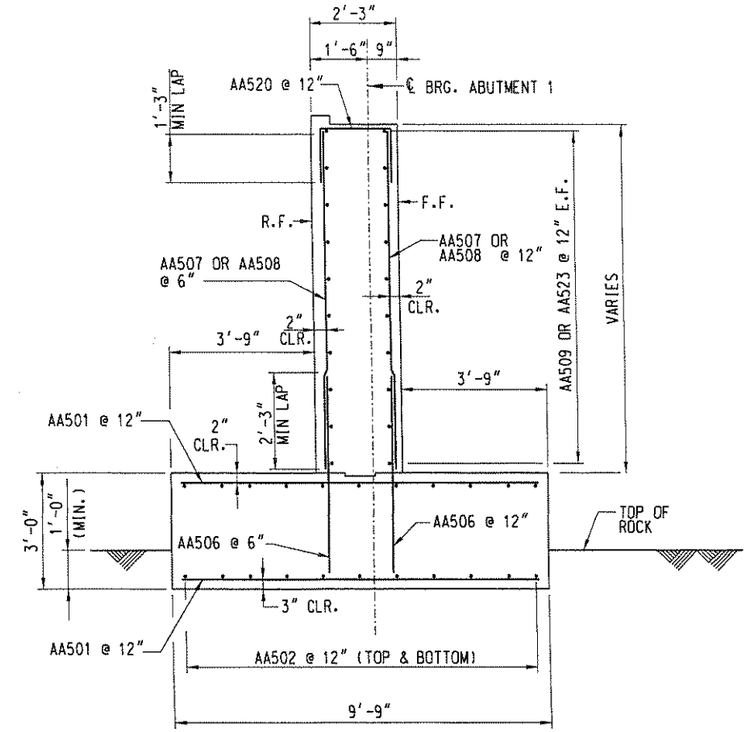

SECTION A-A

SCALE: 1/2" = 1'-0"

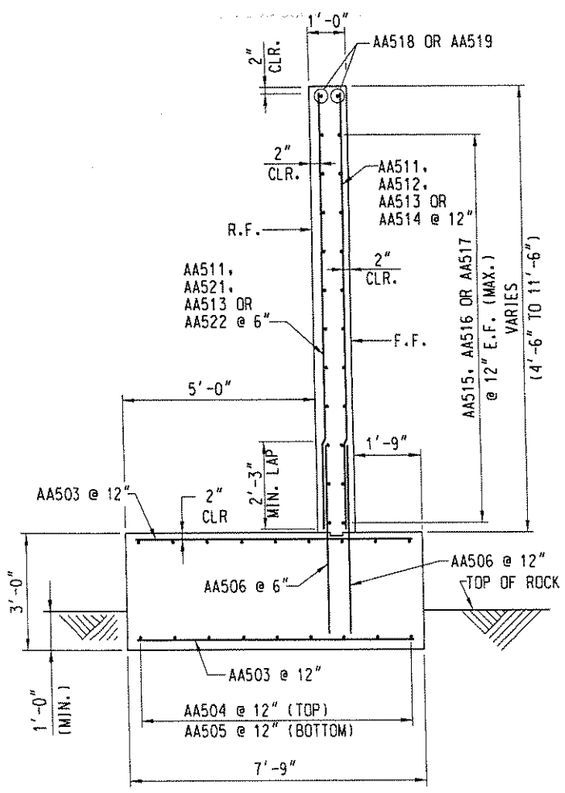

SECTION B-B

SCALE: 1/2" = 12"

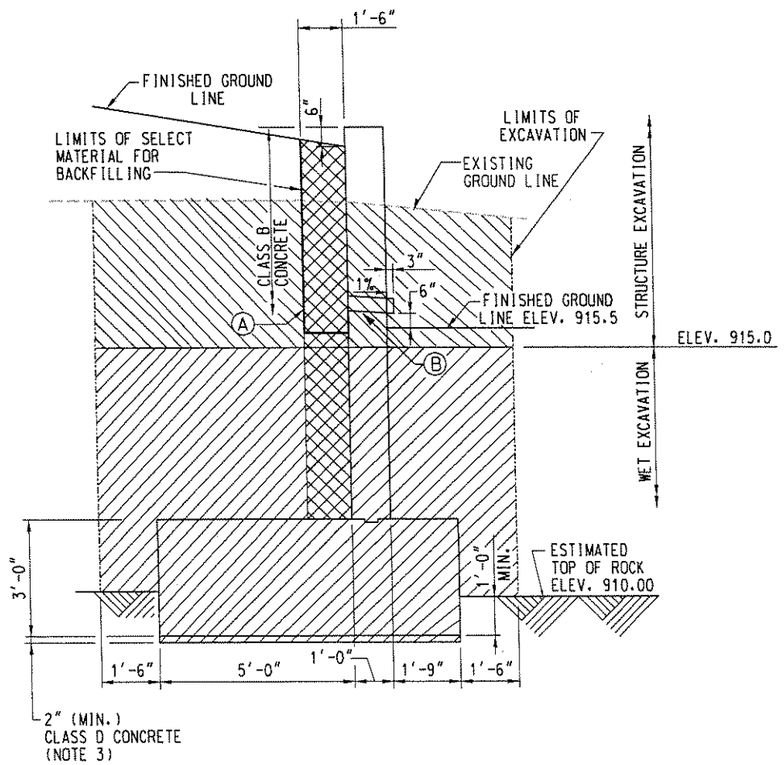

(A) SELECT MATERIAL FOR BACKFILLING WRAPPED IN ENGINEERING FABRIC FOR SUBSURFACE DRAINAGE.

(B) 6" DIA. WEEP DRAIN

LIMITS OF STRUCTURE EXCAVATION

LIMITS OF WET EXCAVATION

LIMITS OF SELECT MATERIAL FOR BACKFILLING

TYPICAL WINGWALL A & B SECTION

SCALE: 1/2" = 1'-0"

LOCATION	FACTORED BEARING LOAD	FACTORED BEARING RESISTANCE
ABUTMENT 1	4 KSF	4 KSF
WINGWALL A	3.4 KSF	4 KSF
WINGWALL B	3.4 KSF	4 KSF

LEGEND:

F.F = FRONT FACE
R.F. = REAR FACE
E.F. = EACH FACE

NOTES:

1. FOR GENERAL NOTES, SEE SHEETS B2 AND B3.
2. FOR FOUNDATION LAYOUT, SEE SHEET B5.
3. FOUNDATION SUBGRADE PROTECTION IS REQUIRED. SEE STRUCTURE EXCAVATION NOTES, SHEET B3.
4. FOR REINFORCING STEEL BAR SCHEDULE, SEE SHEET B13.

NO.	REVISION	DATE:	BY:

W. V. DEPARTMENT OF TRANSPORTATION
DIVISION OF HIGHWAYS - ENGINEERING DIVISION

SCOTT SLAB BRIDGE REPLACEMENT
BRIDGE NO. 10570
ABUTMENT 1
FOOTING PLAN & DETAILS

DESIGNED WJW	DATE 07-05
DRAWN JFD	07-05
CHECKED JML	07-05
CHECKED JML	07-05

URS

SHEET B7 OF B28
BRIDGE NO. 10570

P:\KWOOD SCOTT SLAB BRIDGE\CADD\Structure\PLANS\P S & E Feb 15 2006\sr-abt.scottslb3.dgn 8/14/2007 1:58:36 PM
J06239S8 - BRIDGE 5

PROJECT NUMBERS		DISTRICT	COUNTY	SHEET NO.	TOTAL SHTS.
STATE	FEDERAL				
S317-12-0.89 00	BR-0012(042)E	4	HARRISON	44	93

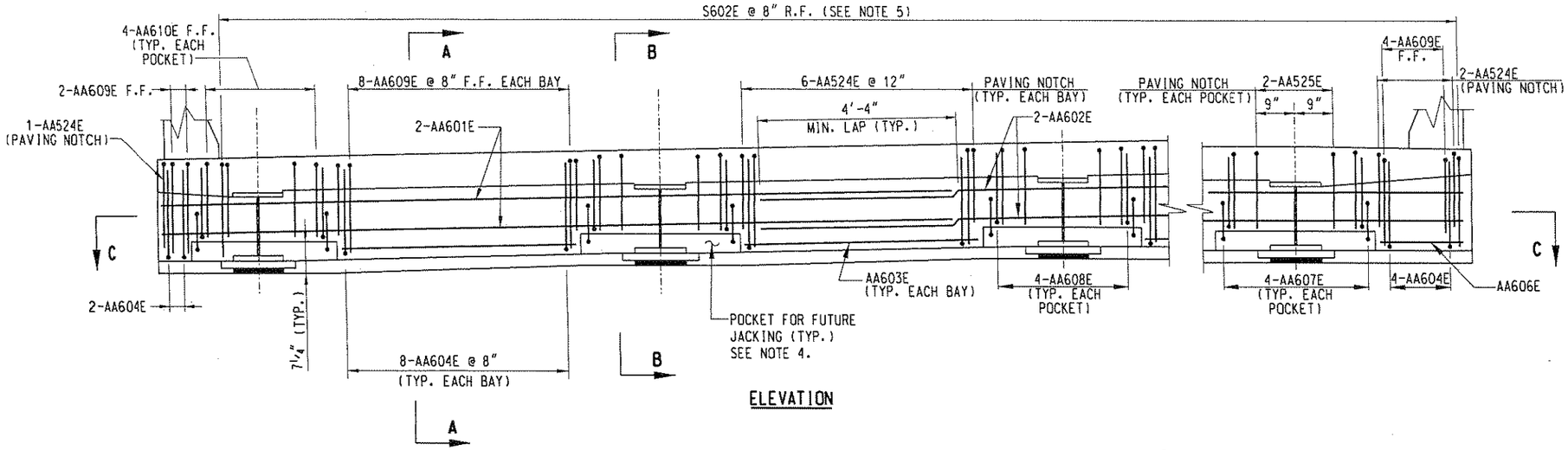

ELEVATION

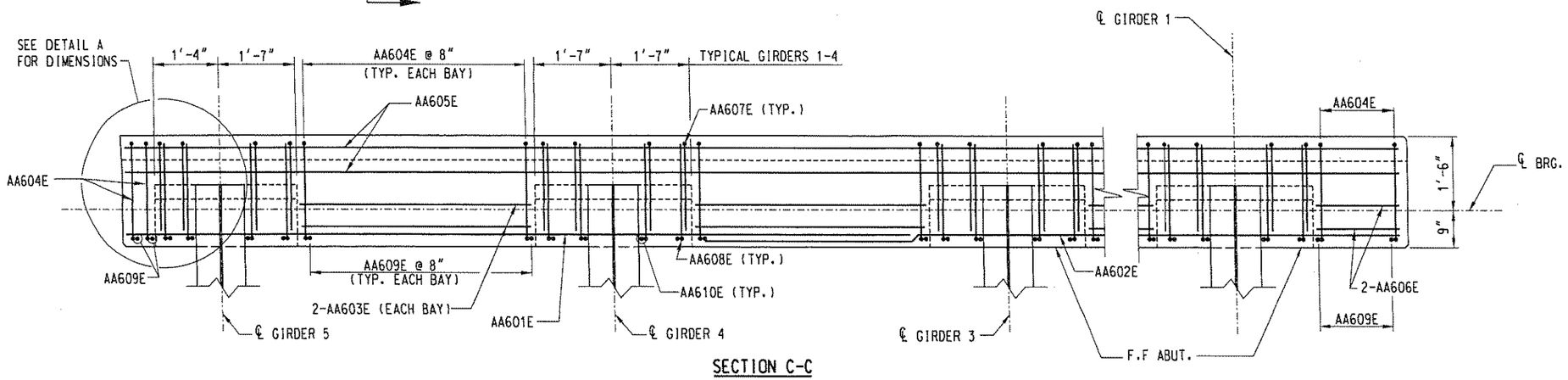

SECTION C-C

ABUTMENT 1 - DIAPHRAGM

SCALE: ¾" = 1'-0"

S602E BARS AND PAVING NOTCH BARS AA524E AND AA525E NOT SHOWN FOR CLARITY

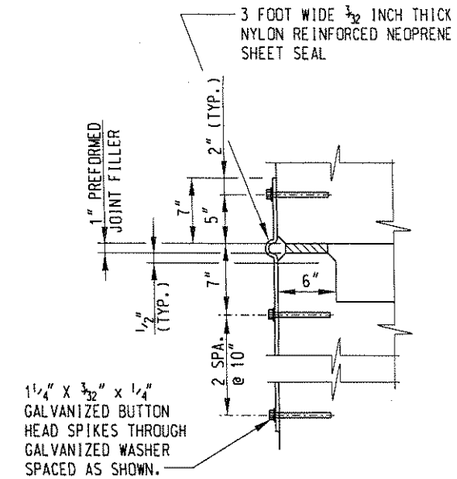

DETAIL X

NOT TO SCALE

NOTES:

1. FOR GENERAL NOTES, SEE SHEETS B2 AND B3.
2. FOR REINFORCING STEEL BAR SCHEDULE, SEE SHEET B13.
3. FOR DETAIL A, SEE SHEET B6.
4. FUTURE JACKING FOR BEARING REPLACEMENT SHALL BE ACCOMPLISHED BY POSITIONING LOW PROFILE JACKS ON EACH SIDE OF THE GIRDERS. FUTURE JACKING SHALL BE BALANCED AND UNDER DEAD LOAD ONLY.
5. SEE SHEET B19 FOR ADDITIONAL DECK REINFORCING STEEL BARS NOT SHOWN ON THIS SHEET.
6. AA604E AND AA609E ARE PLACED TOGETHER.
7. AA607E, AA608E AND AA610E ARE PLACED TOGETHER.

LEGEND:

F.F. = FRONT FACE
R.F. = REAR FACE
E.F. = EACH FACE

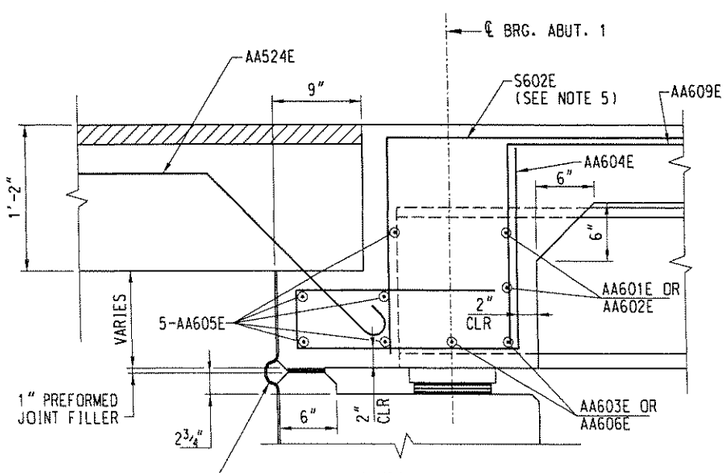

SECTION A-A

SCALE: 1½" = 1'-0"

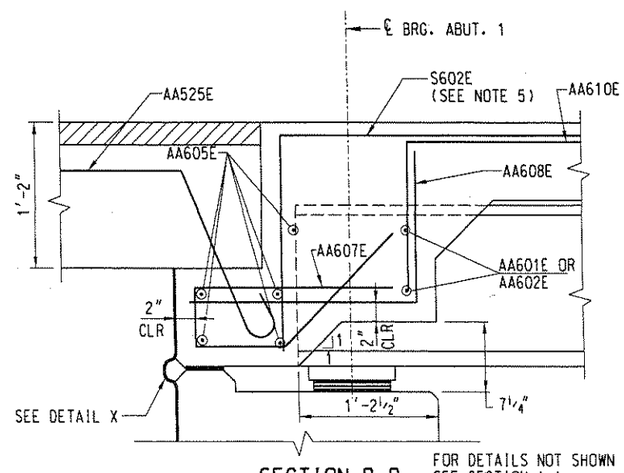

SECTION B-B

SCALE: 1½" = 1'-0"

FOR DETAILS NOT SHOWN SEE SECTION A-A

NO.	REVISION	DATE:	BY:

W. V. DEPARTMENT OF TRANSPORTATION
DIVISION OF HIGHWAYS - ENGINEERING DIVISION

SCOTT SLAB BRIDGE REPLACEMENT
BRIDGE NO. 10570
ABUTMENT 1 DIAPHRAGM

DESIGNED	JML	07-05
DRAWN	JFD	07-05
CHECKED	JET	07-05
CHECKED	JET	07-05

URS

SHEET B8 OF B28

BRIDGE NO. 10570

P:\WVDOH SCOTT SLAB BRIDGE\CADD\Structure\PLANS\P S & E Feb 15 2005\str_abt_scottslb4.dgn 8/14/2007 1:51:31 PM

PROJECT NUMBERS		DISTRICT	COUNTY	SHEET NO.	TOTAL SHTS.
STATE	FEDERAL				
S317-12-0.89 00	BR-0012(042)E	4	HARRISON	45	93

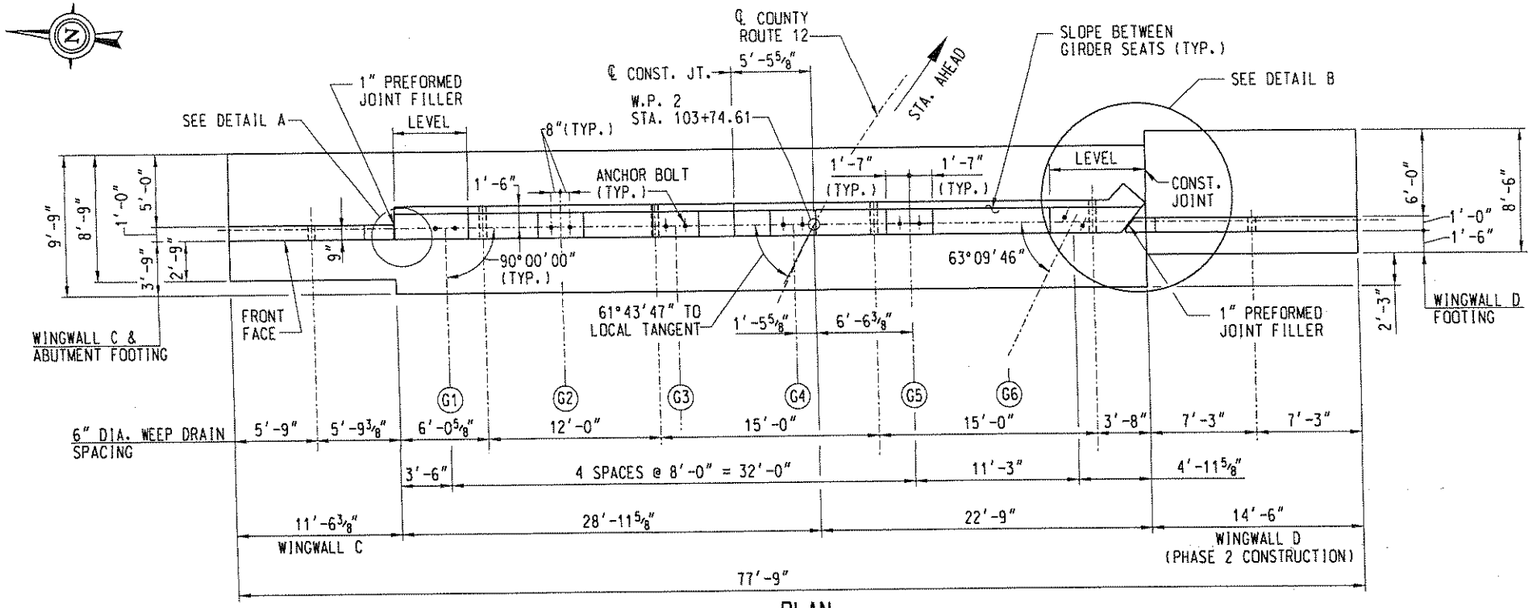

PLAN

SCALE: 3/16" = 1'-0"

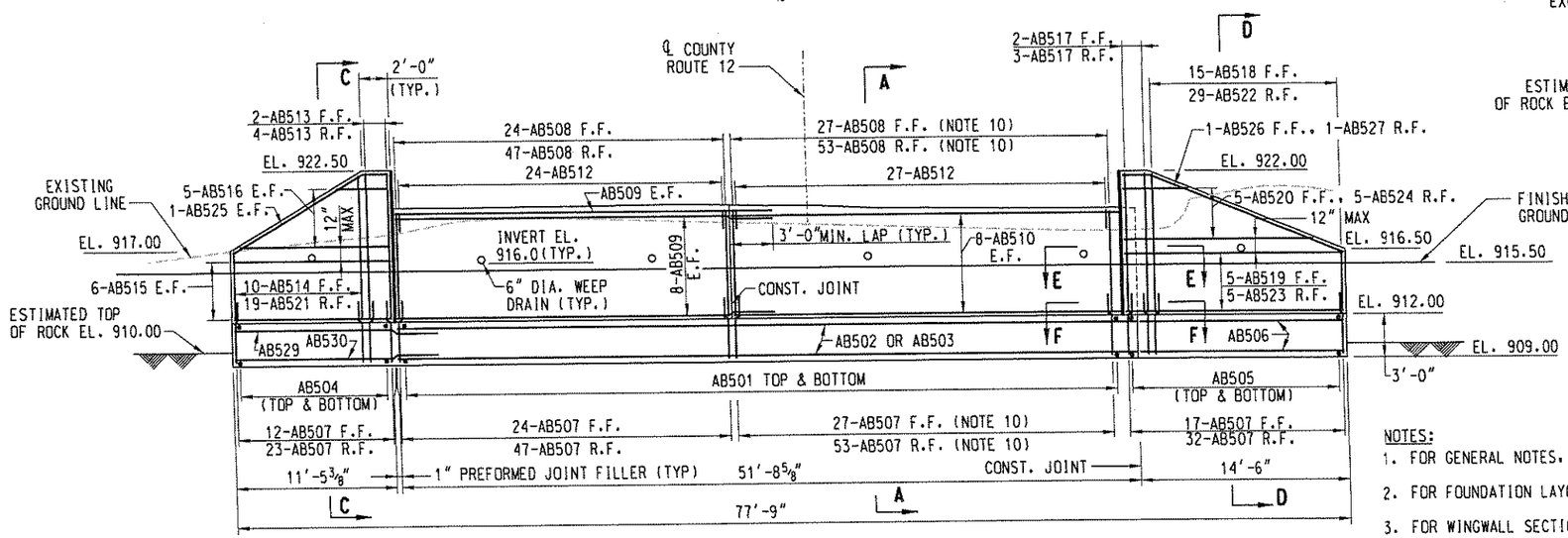

ELEVATION

SCALE: 3/16" = 1'-0"

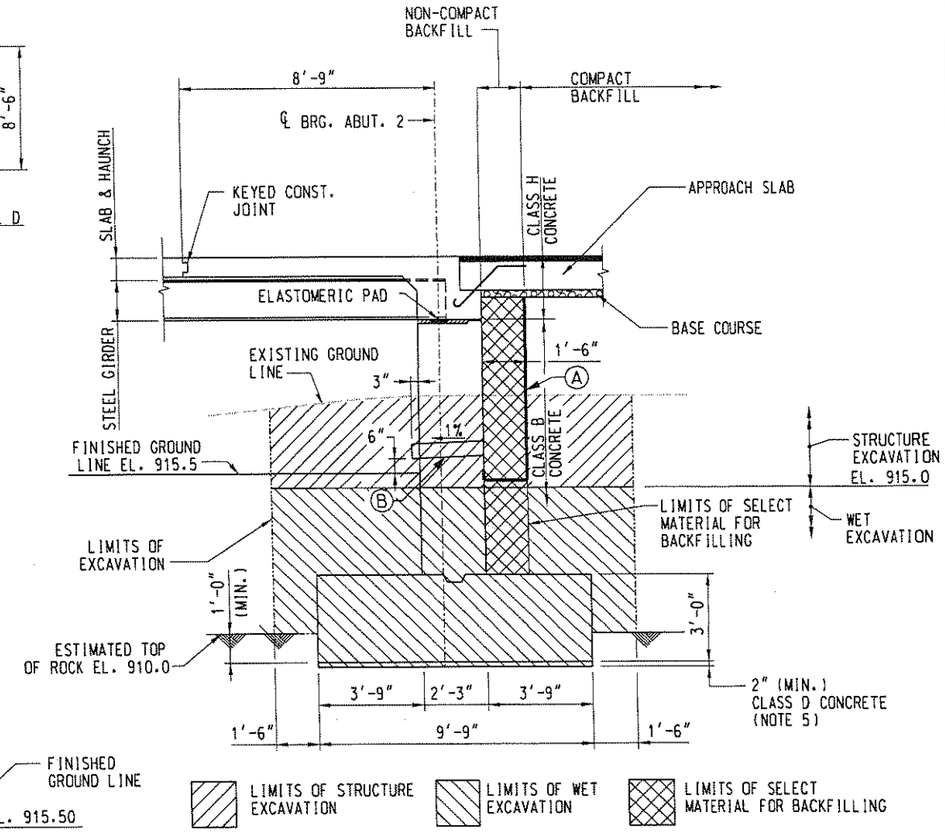

TYPICAL ABUTMENT 2 SECTION

SCALE: 3/8" = 1'-0"

(A) SELECT MATERIAL FOR BACKFILLING WRAPPED IN ENGINEERING FABRIC FOR SUBSURFACE DRAINAGE.

(B) 6" DIA. WEEP DRAIN

GIRDER SEAT ELEVATIONS	
GIRDER 1	919.66
GIRDER 2	919.77
GIRDER 3	919.74
GIRDER 4	919.55
GIRDER 5	919.36
GIRDER 6	919.15

LEGEND:
F.F = FRONT FACE
R.F. = REAR FACE
E.F. = EACH FACE

NOTES:

1. FOR GENERAL NOTES, SEE SHEETS B2 AND B3.
2. FOR FOUNDATION LAYOUT, SEE SHEET B5.
3. FOR WINGWALL SECTIONS C-C AND D-D, SEE SHEET B12.
4. FOR DIAPHRAGM DETAILS, SEE SHEET B11.
5. FOUNDATION SUBGRADE PROTECTION IS REQUIRED. SEE STRUCTURE EXCAVATION NOTES, SHEET B3.
6. FOR REINFORCING STEEL BAR SCHEDULE, SEE SHEET B13.
7. FOR ABUTMENT SECTION A-A, SEE SHEET B10.
8. WINGWALL D SHALL BE CONSTRUCTED IN PHASE 2 OF CONSTRUCTION. SEE DETAIL B, SHEET B10.
9. FOR FOOTING PLAN, SEE SHEET B10.
10. SEE SECTIONS E-E & F-F, SHEET B10, FOR ADDITIONAL AB507 AND AB508 BARS IN ABUTMENT STEM EXTENSION.
11. SEE SHEET B12 FOR WEEP DRAIN REINFORCING.

NO.	REVISION	DATE:	BY:

W. V. DEPARTMENT OF TRANSPORTATION
DIVISION OF HIGHWAYS - ENGINEERING DIVISION

SCOTT SLAB BRIDGE REPLACEMENT
BRIDGE NO. 10570
ABUTMENT 2
PLAN & ELEVATION

DESIGNED WJW	DATE 07-05	
DRAWN JFD	07-05	
CHECKED JML	07-05	
CHECKED JET	07-05	

URS

SHEET B9 OF B28
BRIDGE NO. 10570

P:\WVDOH SCOTT SLAB BRIDGE\CADD\Structure\PLANS\P S & E Feb 15 2006\str_abt_scottslb2.dgn 8/14/2007 1:44:38 PM

PROJECT NUMBERS		DISTRICT	COUNTY	SHEET NO.	TOTAL SHTS.
STATE	FEDERAL				
S317-12-0.89 00	BR-0012(042)E	4	HARRISON	46	93

LOCATION	FACTORED BEARING LOAD	FACTORED BEARING RESISTANCE
ABUTMENT 2	4 KSF	4 KSF
WINGWALL C	2.9 KSF	4 KSF
WINGWALL D	3.7 KSF	4 KSF

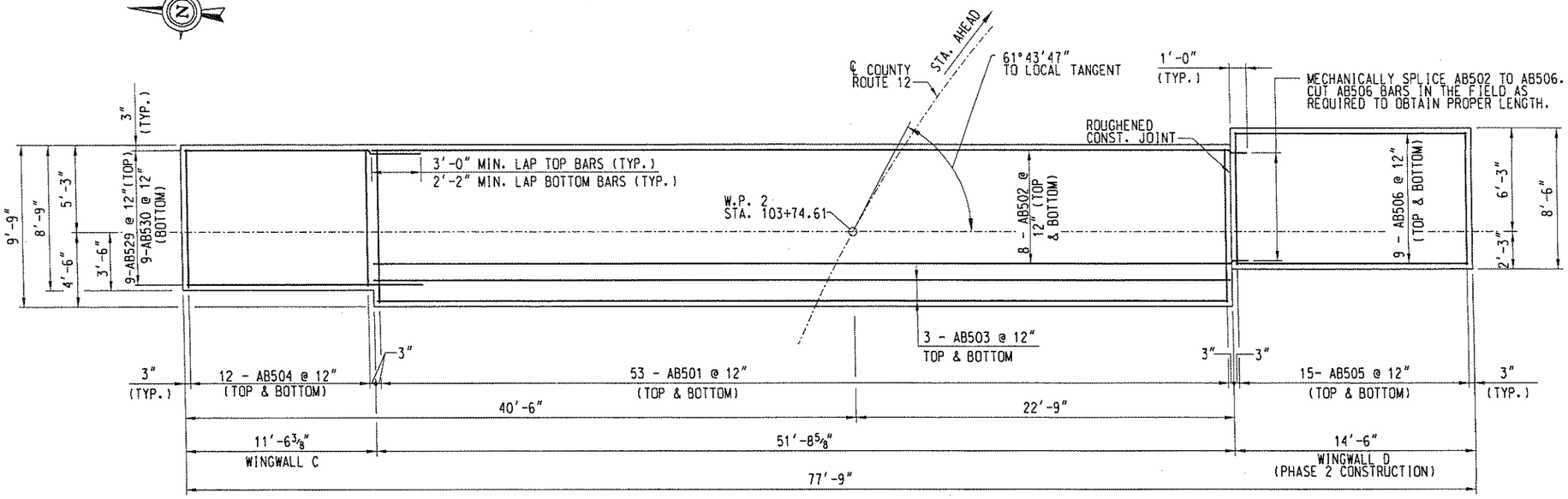

ABUTMENT 2 - FOOTING PLAN

SCALE: 1/4" = 1'-0"

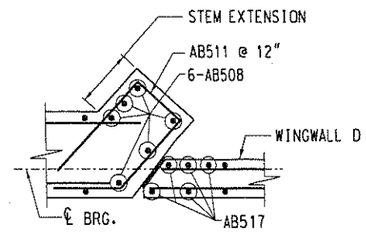

SECTION E-E

SCALE: 1/2" = 1'-0"

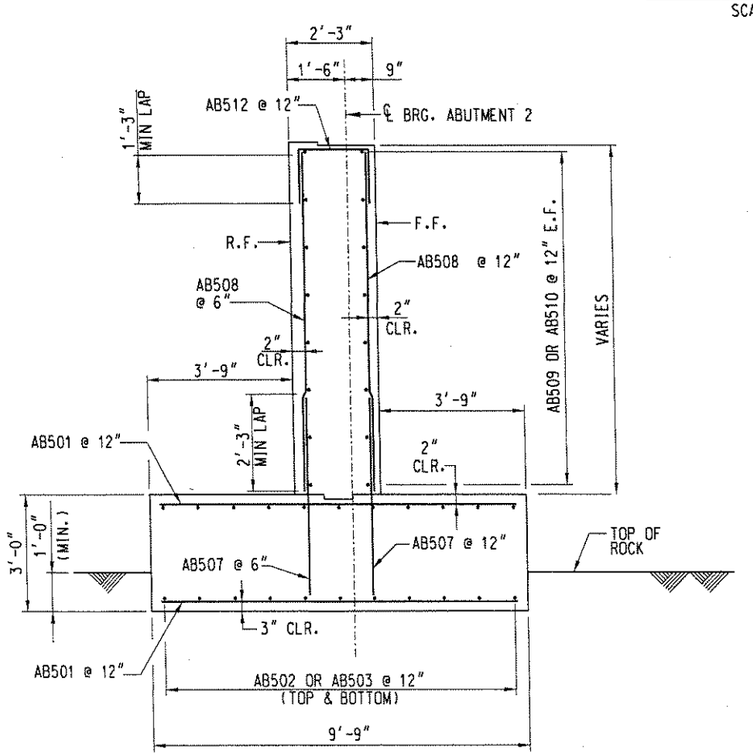

SECTION A-A

SCALE: 1/2" = 1'-0"

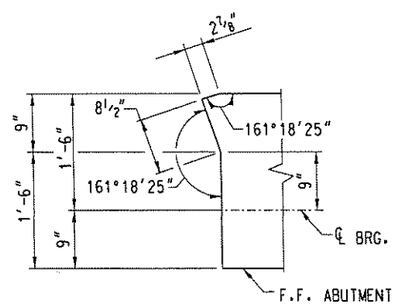

DETAIL A

SCALE: 1" = 1'-0"

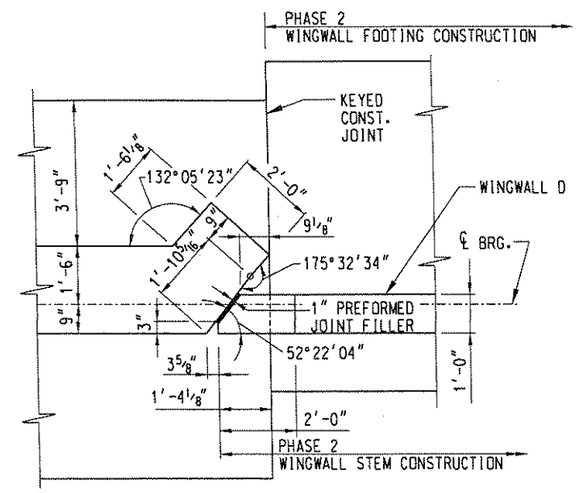

DETAIL B

SCALE: 1/2" = 1'-0"

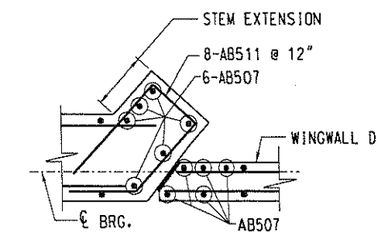

SECTION F-F

SCALE: 1/2" = 1'-0"

LEGEND:
F.F = FRONT FACE
R.F. = REAR FACE
E.F. = EACH FACE

NOTES:

1. FOR GENERAL NOTES, SEE SHEETS B2 AND B3.
2. FOR FOUNDATION LAYOUT, SEE SHEET B5.
3. FOUNDATION SUBGRADE PROTECTION IS REQUIRED. SEE STRUCTURE EXCAVATION NOTES, SHEET B3.
4. FOR REINFORCING STEEL BAR SCHEDULE, SEE SHEET B13.

NO.	REVISION	DATE:	BY:

W. V. DEPARTMENT OF TRANSPORTATION
DIVISION OF HIGHWAYS - ENGINEERING DIVISION

SCOTT SLAB BRIDGE REPLACEMENT
BRIDGE NO. 10570
ABUTMENT 2
FOOTING PLAN & DETAILS

DESIGNED WJW	DATE 07-05
DRAWN JFD	07-05
CHECKED JML	07-05
CHECKED JML	07-05

URS

SHEET B10 OF B28
BRIDGE NO. 10570

P:\WVDOH SCOTT SLAB BRIDGE\CADD\Structure\PLANS\P S & E Feb 15 2006\str_abt.scottslb3A.dgn 8/14/2007 1:51:03 PM
J06C29C98 - BRIDGE b

PROJECT NUMBERS STATE	PROJECT NUMBERS FEDERAL	DISTRICT	COUNTY	SHEET NO.	TOTAL SHTS.
S317-12-0.89 00	BR-0012(042)E	4	HARRISON	47	93

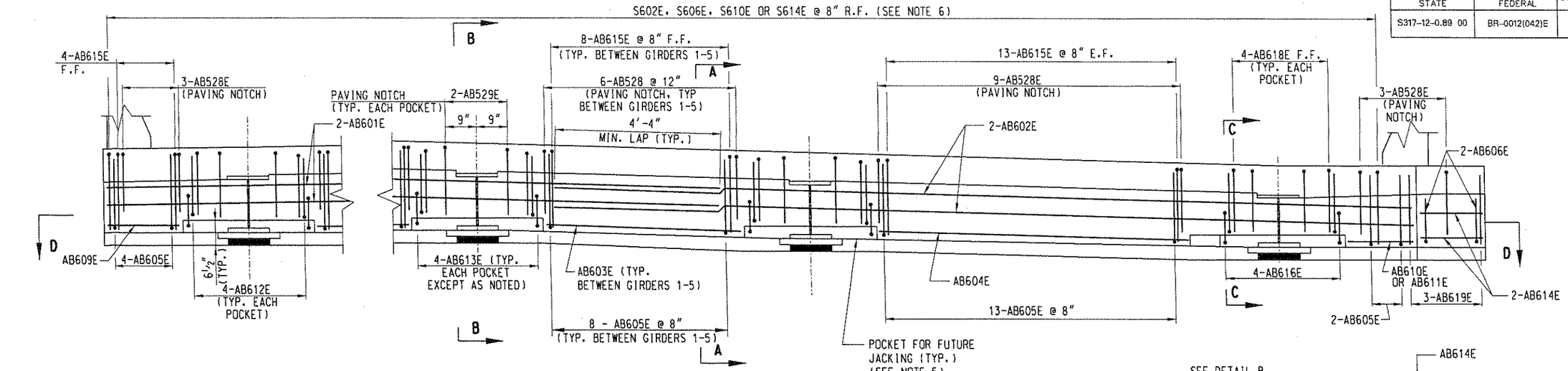

ELEVATION

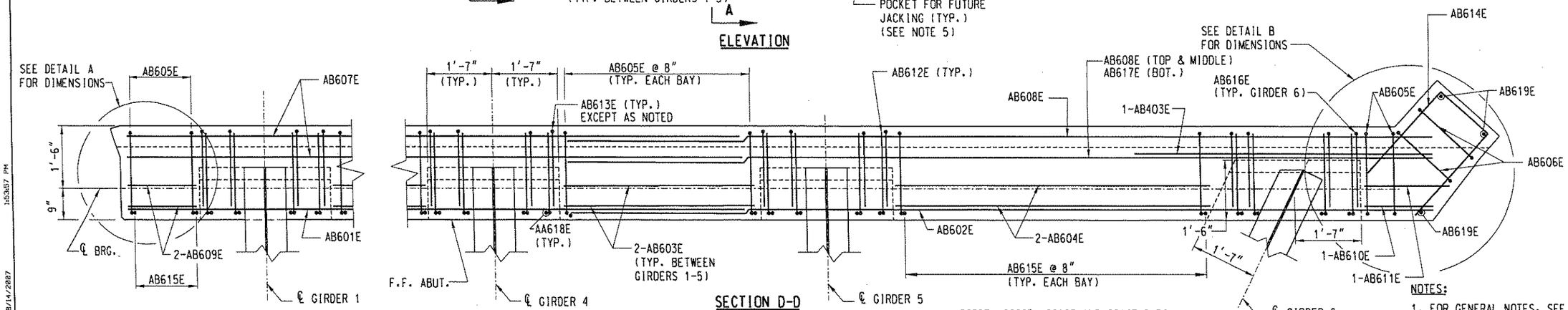

SECTION D-D
ABUTMENT 2 - DIAPHRAGM
SCALE: ¾" = 1'-0"

S602E, S606E, S610E AND S614E BARS AND PAVING NOTCH BARS AB528E AND AB529E NOT SHOWN FOR CLARITY.

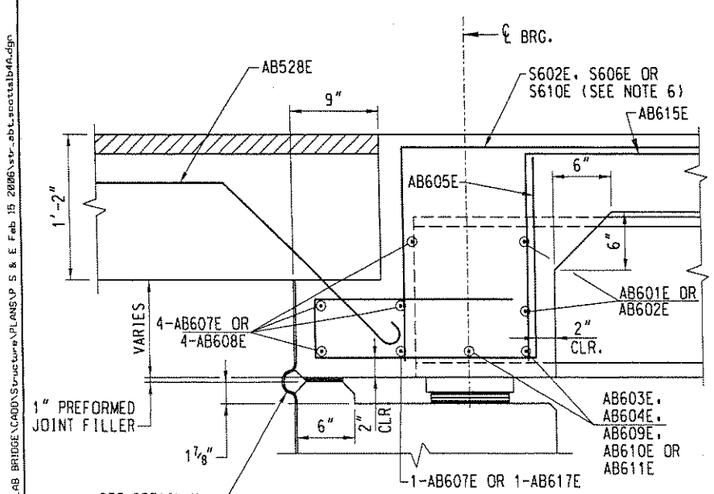

SECTION A-A
SCALE: 1½" = 1'-0"

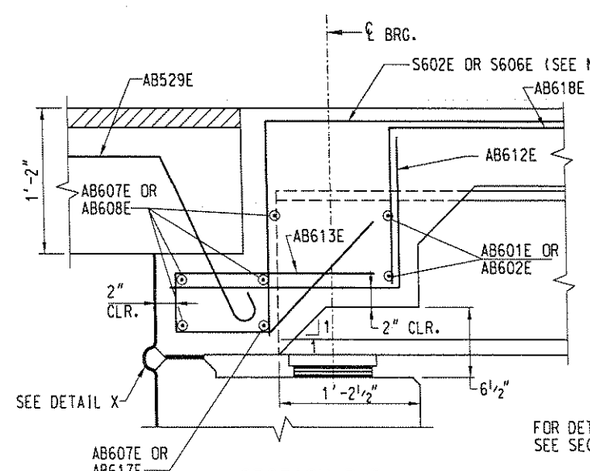

SECTION B-B
SCALE: 1½" = 1'-0"

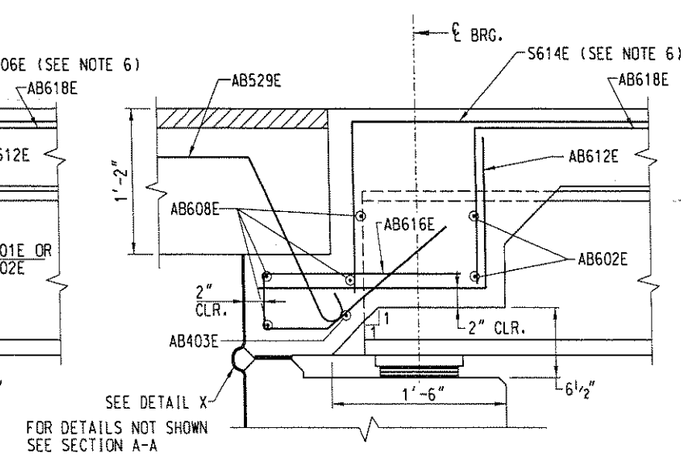

SECTION C-C
SCALE: 1½" = 1'-0"

LEGEND:

F.F. = FRONT FACE
R.F. = REAR FACE
E.F. = EACH FACE

NOTES:

1. FOR GENERAL NOTES, SEE SHEETS B2 AND B3.
2. FOR REINFORCING STEEL BAR SCHEDULE, SEE SHEET B13.
3. FOR DETAILS A & B, SEE SHEET B10.
4. SEE SHEET B8 FOR DETAIL X.
5. FUTURE JACKING FOR BEARING REPLACEMENT SHALL BE ACCOMPLISHED BY POSITIONING LOW PROFILE JACKS ON EACH SIDE OF THE GIRDERS. FUTURE JACKING SHALL BE BALANCED AND UNDER DEAD LOAD ONLY.
6. SEE SHEET B19 FOR ADDITIONAL DECK REINFORCING STEEL BARS NOT SHOWN ON THIS SHEET.
7. AB605E AND AB615E ARE PLACED TOGETHER.
8. AB612E, AB618E AND AB613E OR AB616E ARE PLACED TOGETHER.

NO.	REVISION	DATE:	BY:

W. V. DEPARTMENT OF TRANSPORTATION
DIVISION OF HIGHWAYS - ENGINEERING DIVISION

SCOTT SLAB BRIDGE REPLACEMENT
BRIDGE NO. 10570
ABUTMENT 2 DIAPHRAGM

DESIGNED	JML	07-05
DRAWN	JFD	07-05
CHECKED	JET	07-05
CHECKED	JET	07-05

URS

SHEET B11 OF B28
BRIDGE NO. 10570

P:\WVDOH SCOTT SLAB BRIDGE\CADD\Structure\PLANS\P S & E Feb 15 2006\str_abt_scottslb46.dgn 8/14/2007 1:53:57 PM
J06229C95 - BRIDGE b

PROJECT NUMBERS		DISTRICT	COUNTY	SHEET NO.	TOTAL SHTS.
STATE	FEDERAL				
S317-12-0.89 00	BR-0012(042)E	4	HARRISON	48	93

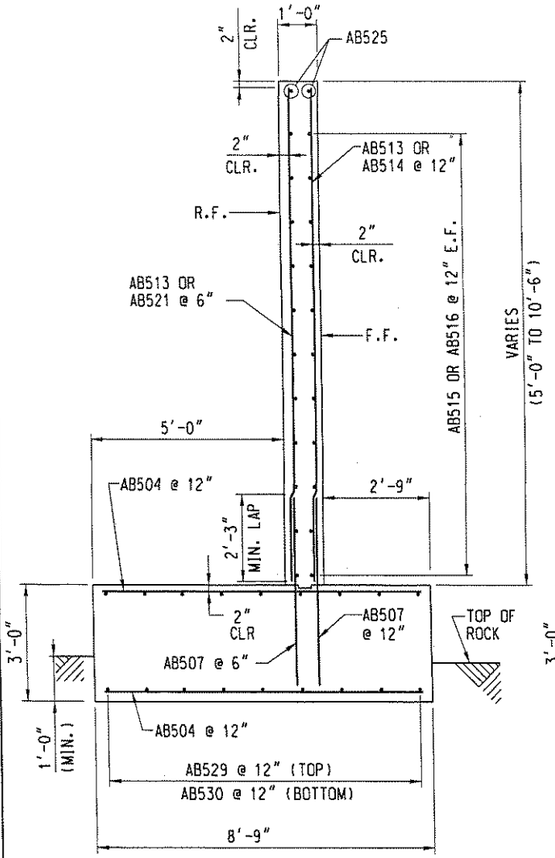

SECTION C-C
SCALE: 1/2" = 1'-0"

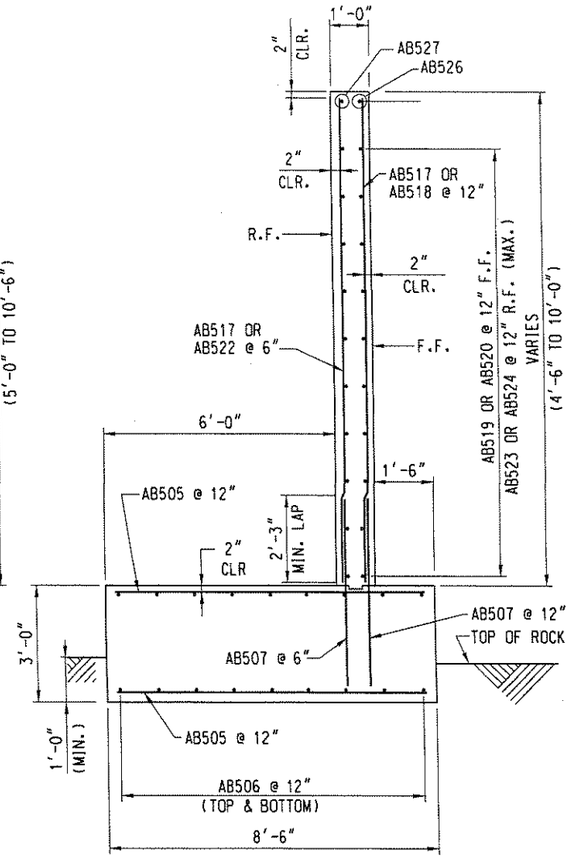

SECTION D-D
SCALE: 1/2" = 1'-0"

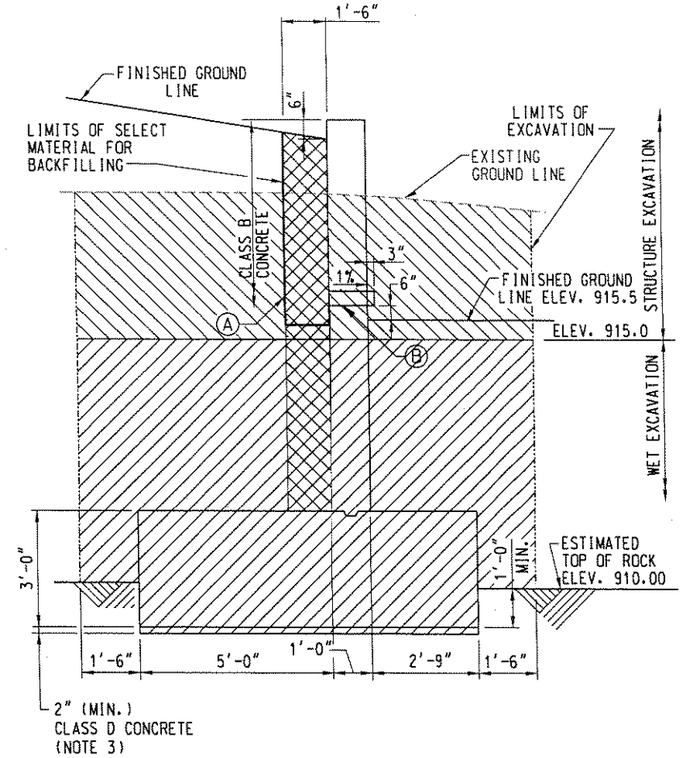

TYPICAL WINGWALL C SECTION
SCALE: 1/2" = 1'-0"

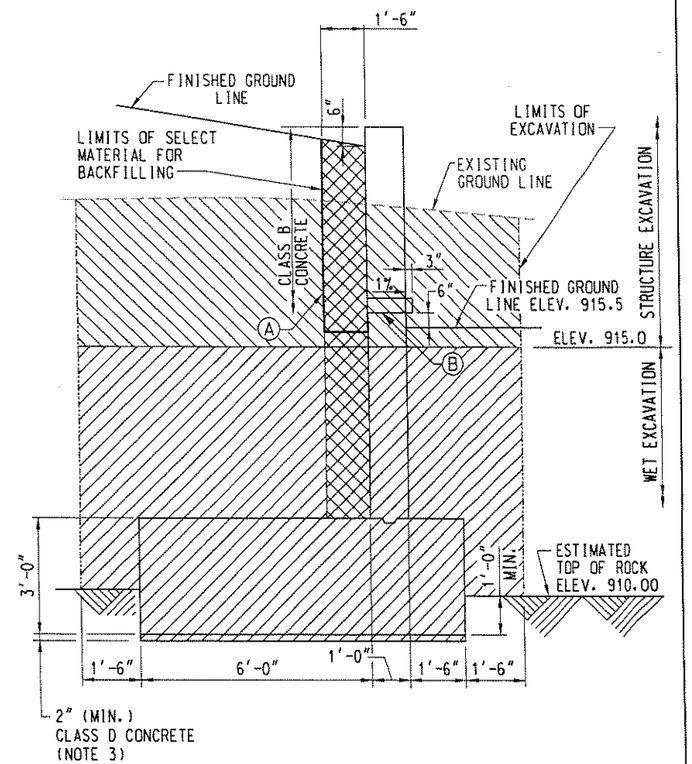

TYPICAL WINGWALL D SECTION
SCALE: 1/2" = 1'-0"

(A) SELECT MATERIAL FOR BACKFILLING WRAPPED IN ENGINEERING FABRIC FOR SUBSURFACE DRAINAGE.

(B) 6" DIA. WEEP DRAIN

LIMITS OF STRUCTURE EXCAVATION

LIMITS OF WET EXCAVATION

LIMITS OF SELECT MATERIAL FOR BACKFILLING

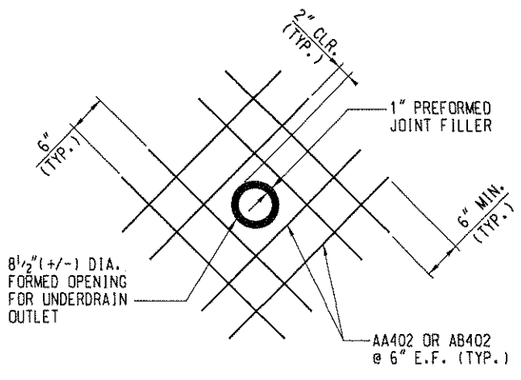

WEEP DRAIN REINFORCING DETAIL
SCALE: 1" = 1'-0"

LEGEND:

F.F = FRONT FACE
R.F. = REAR FACE
E.F. = EACH FACE

NOTES:

1. FOR GENERAL NOTES, SEE SHEETS B2 AND B3.
2. FOR FOUNDATION LAYOUT, SEE SHEET B5.
3. FOUNDATION SUBGRADE PROTECTION IS REQUIRED. SEE STRUCTURE EXCAVATION NOTES, SHEET B3.
4. FOR REINFORCING STEEL BAR SCHEDULE, SEE SHEET B13.
5. FOR FOOTING PLAN, SEE SHEET B10.
6. FOR WINGWALL PLAN VIEWS, SEE SHEET B9.

NO.	REVISION	DATE:	BY:

W. V. DEPARTMENT OF TRANSPORTATION
DIVISION OF HIGHWAYS - ENGINEERING DIVISION

SCOTT SLAB BRIDGE REPLACEMENT
BRIDGE NO. 10570
WINGWALL C & D SECTIONS

DESIGNED WJW	DATE 07-05
DRAWN WJW/JFD	07-05
CHECKED JML	07-05
CHECKED JML	07-05

URS

SHEET B12 OF B28
BRIDGE NO. 10570

P:\WVDOH SCOTT SLAB BRIDGE\CADD\Structure\PLANS\P S & E Feb 15 2006\str_abt_scottslb5.dgn 8/14/2007 1:54:26 PM
JOBC29C98 - BRIDGE b

PROJECT NUMBERS		DISTRICT	COUNTY	SHEET NO.	TOTAL SHTS.
STATE	FEDERAL				
S317-12-0.89 00	BR-0012(042)E	4	HARRISON	49	93

ABUTMENT REINFORCING STEEL BAR SCHEDULE

ABUTMENT 1

MARK	QTY	SIZE	LENGTH	TYPE	A	B	C	REMARKS
AA402	48	4	3'-1"	STR	-	-	-	WEEPHOLES
AA501	76	5	9'-3"	STR	-	-	-	
AA502	22	5	37'-0"	STR	-	-	-	
AA506	115	5	5'-9"	STR	-	-	-	
AA507	68	5	7'-5"	STR	-	-	-	
AA508	47	5	7'-10"	STR	-	-	-	
AA509	18	5	25'-0"	STR	-	-	-	
AA520	39	5	4'-5"	1	1'-3"	1'-11"	-	
AA523	20	5	15'-2"	STR	-	-	-	
-	-	-	-	-	-	-	-	
-	-	-	-	-	-	-	-	
-	-	-	-	-	-	-	-	

ABUTMENT 2

MARK	QTY	SIZE	LENGTH	TYPE	A	B	C	REMARKS
AB402	64	4	3'-1"	STR	-	-	-	WEEPHOLES
AB501	106	5	9'-3"	STR	-	-	-	
AB502	16	5	52'-6"	STR	-	-	-	
AB503	6	5	51'-2"	STR	-	-	-	
AB507	157	5	6'-0"	STR	-	-	-	
AB508	157	5	6'-10"	STR	-	-	-	
AB509	18	5	26'-9"	STR	-	-	-	
AB510	16	5	26'-0"	STR	-	-	-	
AB511	8	5	8'-1"	2	-	-	-	
AB512	51	5	4'-5"	1	1'-3"	1'-11"	-	
-	-	-	-	-	-	-	-	
-	-	-	-	-	-	-	-	

WINGWALL REINFORCING STEEL BAR SCHEDULE

WINGWALL A

MARK	QTY	SIZE	LENGTH	TYPE	A	B	C	REMARKS
AA402	16	4	3'-1"	STR	-	-	-	WEEPHOLES
AA503	28	5	7'-3"	STR	-	-	-	
AA504	9	5	16'-6"	STR	-	-	-	
AA505	9	5	15'-8"	STR	-	-	-	
AA506	41	5	5'-9"	STR	-	-	-	
AA511	6	5	10'-11"	STR	-	-	-	
AA512	12	5	4'-2" TO 10'-2 7/8"	STR	-	-	-	△ = 6 5/8"
AA515	10	5	13'-1"	STR	-	-	-	
AA516	12	5	3'-1" TO 11'-5"	STR	-	-	-	△= 1'-8 "
AA518	2	5	14'-9"	5	13'-1"	1'-8"	6'-7"	
AA521	23	5	4'-2" TO 10'-2 7/8"	STR	-	-	-	△ = 3 5/16"
-	-	-	-	-	-	-	-	

WINGWALL B

MARK	QTY	SIZE	LENGTH	TYPE	A	B	C	REMARKS
AA402	16	4	3'-1"	STR	-	-	-	WEEPHOLES
AA503	28	5	7'-3"	STR	-	-	-	
AA504	9	5	16'-6"	STR	-	-	-	
AA505	9	5	15'-8"	STR	-	-	-	
AA506	41	5	5'-9"	STR	-	-	-	
AA513	6	5	11'-2"	STR	-	-	-	
AA514	12	5	4'-10" TO 10'-9 1/2"	STR	-	-	-	△ = 6 1/2"
AA515	10	5	13'-1"	STR	-	-	-	
AA517	12	5	3'-1" TO 11'-5"	STR	-	-	-	△= 1'-8 "
AA519	2	5	14'-8"	5	13'-0"	1'-8"	6'-4"	
AA522	23	5	4'-10" TO 10'-9 1/2"	STR	-	-	-	△ = 3 1/4"
-	-	-	-	-	-	-	-	

WINGWALL REINFORCING STEEL BAR SCHEDULE

WINGWALL C

MARK	QTY	SIZE	LENGTH	TYPE	A	B	C	REMARKS
AB402	16	4	3'-1"	STR	-	-	-	WEEPHOLES
AB504	24	5	8'-3"	STR	-	-	-	
AB507	35	5	6'-0"	STR	-	-	-	
AB513	6	5	10'-2"	STR	-	-	-	
AB514	10	5	4'-8" TO 9'-9 7/8"	STR	-	-	-	△ = 6 7/8"
AB515	12	5	11'-1"	STR	-	-	-	
AB516	10	5	3'-6" TO 10'-4"	STR	-	-	-	△ = 1'-8 1/2"
AB521	19	5	4'-8" TO 9'-9 7/8"	STR	-	-	-	△ = 3 1/16"
AB525	2	5	12'-5"	5	10'-9"	1'-8"	5'-4"	
AB529	9	5	14'-7"	STR				
AB530	9	5	13'-9"	STR				
-	-	-	-	-	-	-	-	
-	-	-	-	-	-	-	-	
-	-	-	-	-	-	-	-	

WINGWALL D

MARK	QTY	SIZE	LENGTH	TYPE	A	B	C	REMARKS
AB402	16	4	3'-1"	STR	-	-	-	WEEPHOLES
AB505	30	5	8'-0"	STR	-	-	-	
AB506	18	5	14'-0"	STR	-	-	-	NOTE 2
AB507	49	5	6'-0"	STR	-	-	-	
AB517	5	5	9'-9"	STR	-	-	-	
AB518	15	5	4'-3" TO 9'-6"	STR	-	-	-	△ = 4 1/2"
AB519	5	5	15'-6"	STR	-	-	-	
AB520	5	5	3'-3" TO 13'-3"	STR	-	-	-	△ = 2'-6"
AB522	29	5	4'-3" TO 9'-6"	STR	-	-	-	△ = 2 1/4"
AB523	5	5	14'-11"	STR	-	-	-	
AB524	5	5	2'-8" TO 12'-8"	STR	-	-	-	△ = 2'-6"
AB526	1	5	16'-5"	5	14'-9"	1'-8"	5'-4"	
AB527	1	5	15'-11"	5	14'-9"	1'-2"	5'-4"	

DIAPHRAGM REINFORCING STEEL BAR SCHEDULE

ABUTMENT 1

MARK	QTY	SIZE	LENGTH	TYPE	A	B	C
AA524E	27	5	4'-7"	6	2'-0"	1'-4"	-
AA525E	10	5	4'-0"	6	1'-5"	1'-11"	-
AA601E	2	6	16'-0"	STR	-	-	-
AA602E	2	6	25'-6"	STR	-	-	-
AA603E	8	6	4'-6"	STR	-	-	-
AA604E	38	6	5'-9"	4	1'-11"	1'-6"	7"
AA605E	5	6	37'-2"	STR	-	-	-
AA606E	2	6	1'-7"	STR	-	-	-
AA607E	20	6	4'-6"	7	10"	-	-
AA608E	20	6	3'-3"	3	1'-11"	1'-4"	-
AA609E	38	6	4'-0"	3	2'-4"	1'-8"	-
AA610E	20	6	3'-8"	3	2'-4"	1'-4"	-

ABUTMENT 2

MARK	QTY	SIZE	LENGTH	TYPE	A	B	C
AB403E	1	4	7'-3"	STR	-	-	-
AB528E	39	5	4'-7"	6	2'-0"	1'-4"	-
AB529E	12	5	4'-0"	6	1'-5"	1'-11"	-
AB601E	2	6	33'-6"	STR	-	-	-
AB602E	2	6	20'-7"	STR	-	-	-
AB603E	8	6	4'-6"	STR	-	-	-
AB604E	2	6	7'-3"	STR	-	-	-
AB605E	51	6	5'-9"	4	1'-11"	1'-6"	7"
AB606E	2	6	5'-6"	4	1'-8"	1'-6"	7"
AB607E	5	6	33'-6"	STR	-	-	-
AB608E	4	6	20'-7"	STR	-	-	-
AB609E	2	6	1'-7"	STR	-	-	-
AB610E	1	6	1'-6"	STR	-	-	-
AB611E	1	6	2'-0"	STR	-	-	-
AB612E	24	6	3'-3"	3	1'-11"	1'-4"	-
AB613E	20	6	4'-6"	7	10"	-	-
AB614E	2	6	6'-6"	1	2'-6"	1'-6"	-
AB615E	49	6	4'-0"	3	2'-4"	1'-8"	-
AB616E	4	6	4'-2"	7	6"	-	-
AB617E	1	6	15'-8"	STR	-	-	-
AB618E	24	6	3'-8"	3	2'-4"	1'-4"	-
AB619E	3	6	1'-8"	STR	-	-	-

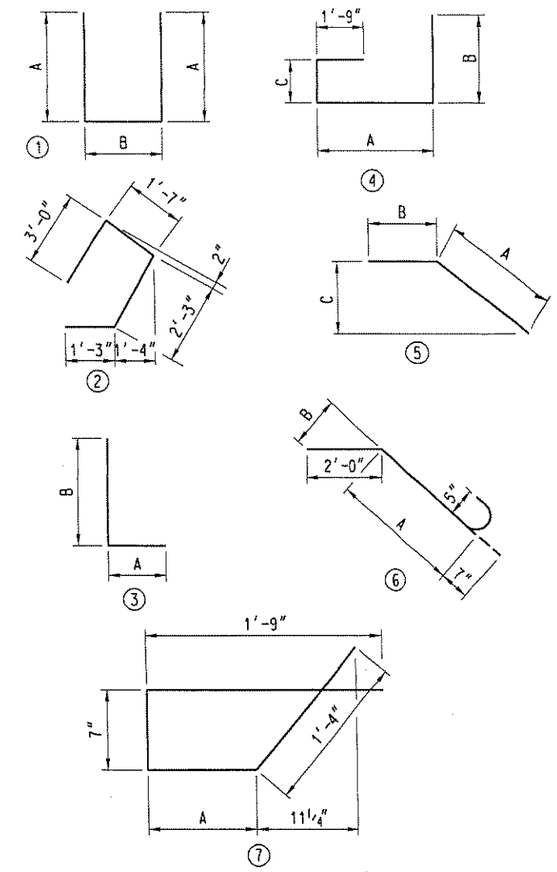

NOTE:
1. FOR ABUTMENT AND WINGWALL DETAILS, SEE SHEETS B6 - B12.
2. AB506 INCLUDES MECHANICAL SPLICE.

NO.	REVISION	DATE:	BY:

W. V. DEPARTMENT OF TRANSPORTATION
DIVISION OF HIGHWAYS - ENGINEERING DIVISION

SCOTT SLAB BRIDGE REPLACEMENT
BRIDGE NO. 10570
ABUTMENT
REINFORCING STEEL BAR SCHEDULE

DESIGNED JML/LCI	DATE 07-05	
DRAWN AWN/JFD	07-05	
CHECKED JET	07-05	
CHECKED JET	07-05	

URS

SHEET B13 OF B28
BRIDGE NO. 10570

P:\WVDOH SCOTT SLAB BRIDGE\CADD\Structure\PLANS\P S & E Feb 15 2006\str_abt_scottslb6.dgn 8/14/2007 1:55:01 PM
J06229C98 - BRIDGE 6

PROJECT NUMBERS		DISTRICT	COUNTY	SHEET NO.	TOTAL SHTS.
STATE	FEDERAL				
S317-12-0.89 00	BR-0012(042)E	4	HARRISON	50	93

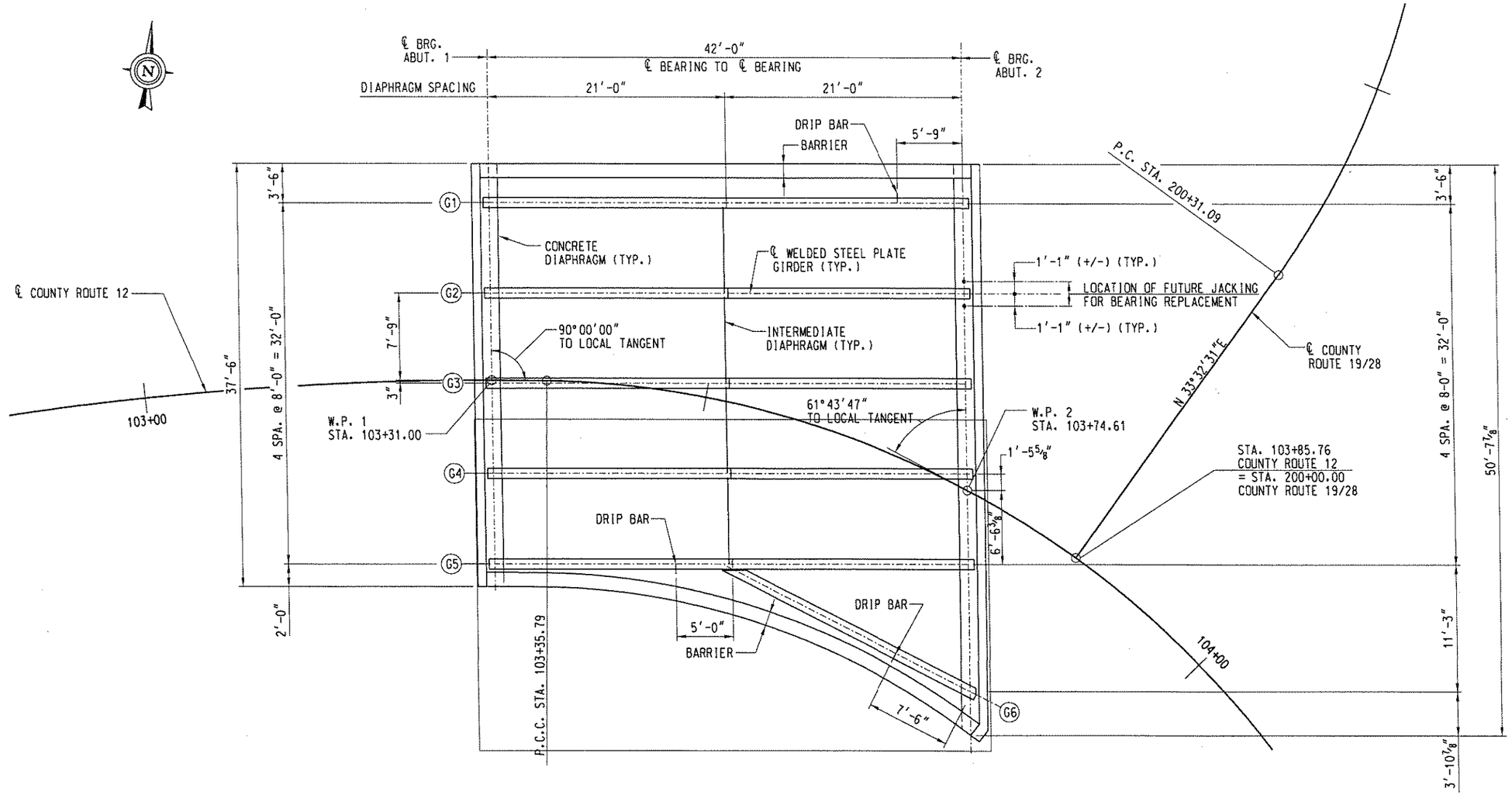

FRAMING PLAN

SCALE: 3/16" = 1'-0"

NOTES:

1. FOR GENERAL NOTES, SEE SHEETS B2 & B3.
2. FOR GIRDER DETAILS, SEE SHEETS B15 & B16.
3. FOR INTERMEDIATE DIAPHRAGM DETAILS, SEE SHEET B16.
4. FOR DRIP BAR DETAILS, SEE SHEET B15.
5. INSTALL GIRDERS AND BEARINGS TO ENSURE FULL CONTACT WITH BEARING SURFACES. IF FULL CONTACT IS NOT ACHIEVED AFTER THE DECK IS IN PLACE, FIELD ADJUSTMENTS OR MODIFICATIONS WILL BE MADE BY THE CONTRACTOR TO ENSURE FULL CONTACT AND ARE SUBJECT TO THE APPROVAL OF THE ENGINEER.

NO.	REVISION	DATE:	BY:

W. V. DEPARTMENT OF TRANSPORTATION
DIVISION OF HIGHWAYS - ENGINEERING DIVISION

SCOTT SLAB BRIDGE REPLACEMENT
BRIDGE NO. 10570
FRAMING PLAN

DESIGNED	WJW/RGS	DATE 07-05
DRAWN	JFD	07-05
CHECKED	JML	07-05
CHECKED	JML	07-05

URS

SHEET B14 OF B28
BRIDGE NO. 10570

P:\WVDOH SCOTT SLAB BRIDGE\CADD\Structure\PLANS\P S & E Feb 15 2005\str_frm_scottslab.dgn 8/14/2007 2:09:41 PM
J06C29C98 - BRIDGE 0

PROJECT NUMBERS		DISTRICT	COUNTY	SHEET NO.	TOTAL SHTS.
STATE	FEDERAL				
S317-12-0.89 00	BR-0012(042)E	4	HARRISON	51	93

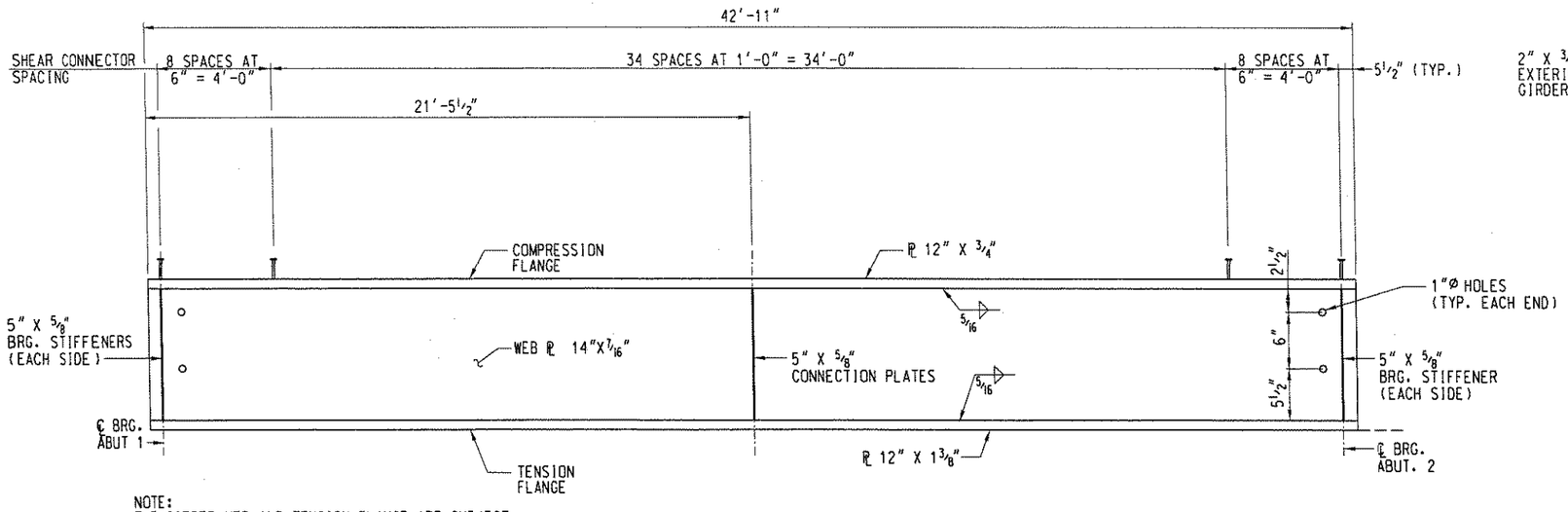

NOTE:
THE GIRDER WEB AND TENSION FLANGE ARE SUBJECT TO CHARPY V-NOTCH IMPACT REQUIREMENTS.

ELEVATION - GIRDERS 1-5

SCALE: ⅜" = 1'-0" (HORIZONTAL)
SCALE: 1½" = 1'-0" (VERTICAL)

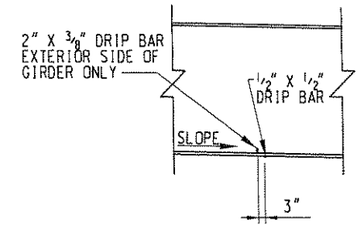

ELEVATION DRIP BAR

NOT TO SCALE

NOTE: DRIP BARS SHALL BE LOCATED ON GIRDERS 1, 5 & 6 ONLY. SEE FRAMING PLAN.

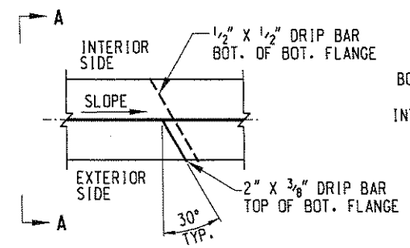

PLAN DRIP BAR

NOT TO SCALE

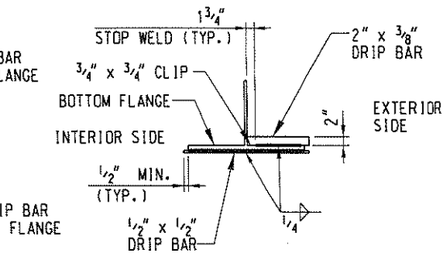

SECTION A-A

NOT TO SCALE

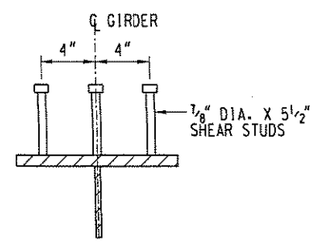

SHEAR CONNECTOR DETAIL

NOT TO SCALE

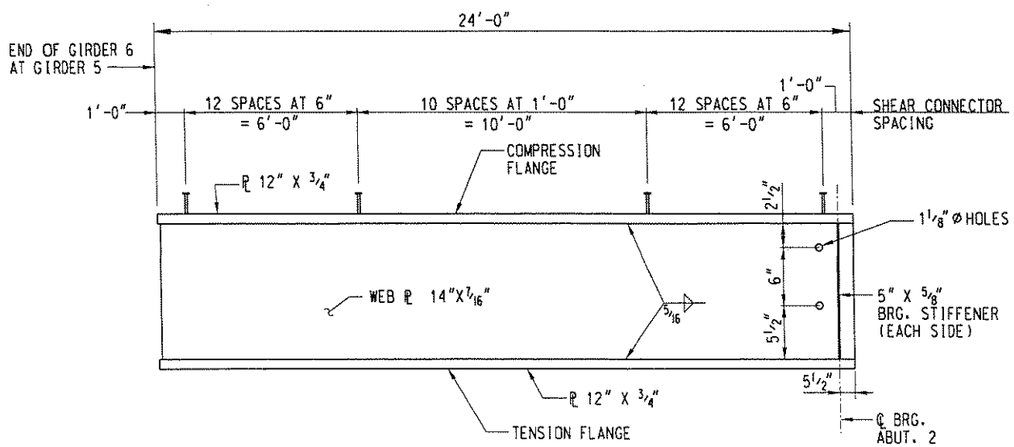

ELEVATION - GIRDER 6

SCALE: ⅜" = 1'-0" (HORIZONTAL)
SCALE: 1½" = 1'-0" (VERTICAL)

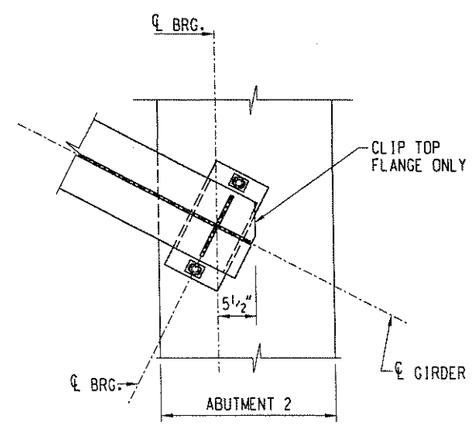

CLIP DETAIL

(GIRDER 6 ONLY)
NOT TO SCALE

NOTES:

1. FOR GENERAL NOTES, SEE SHEETS B2 & B3.
2. FOR FRAMING PLAN, SEE SHEET B14.
3. DIMENSIONS SHOWN ARE HORIZONTAL WITH NO ACCOUNT FOR GRADE.
4. SEE FRAMING PLAN FOR DRIP BAR LOCATIONS.
5. INSTALL THE DRIP BARS BEFORE ERECTION.
6. DRIP BAR ON TOP OF BOTTOM FLANGE SHALL BE CAULKED WITH DARK BROWN CAULKING AGAINST FLANGE, WEB, AND FILLET WELD SUBJECT TO THE APPROVAL OF THE ENGINEER.

NO.	REVISION	DATE:	BY:

W. V. DEPARTMENT OF TRANSPORTATION
DIVISION OF HIGHWAYS - ENGINEERING DIVISION

SCOTT SLAB BRIDGE REPLACEMENT
BRIDGE NO. 10570
GIRDER ELEVATIONS & DETAILS

DESIGNED WJW	DATE 07-05
DRAWN WJW/JFD	07-05
CHECKED JML	07-05
CHECKED JML/BGZ	07-05

URS

SHEET B15 OF B28
BRIDGE NO. 10570

P:\WVDOH SCOTT SLAB BRIDGE\CADD\Structure\PLANS\P S & E Feb 15 2006\str_sup_scottslb1.dgn 8/14/2007 2:27:48 PM
J06C29C98 - BRIDGE B

PROJECT NUMBERS		DISTRICT	COUNTY	SHEET NO.	TOTAL SHTS.
STATE	FEDERAL				
S317-12-0.89 00	BR-0012(042)E	4	HARRISON	52	93

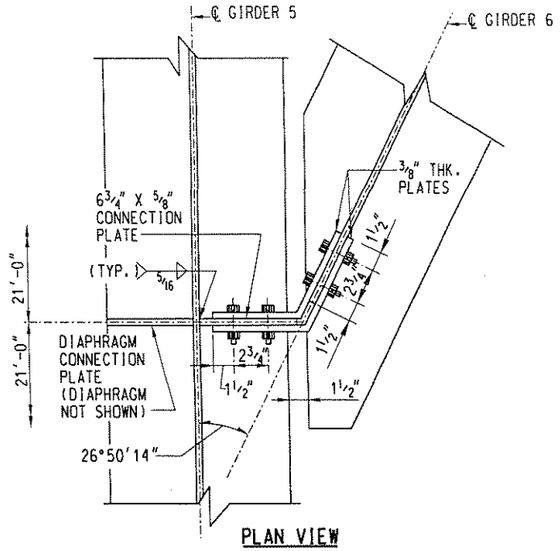

PLAN VIEW

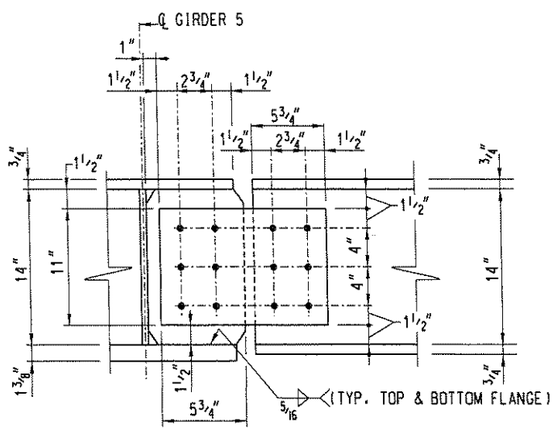

ELEVATION VIEW

GIRDER 6 TO GIRDER 5 CONNECTION

NOT TO SCALE

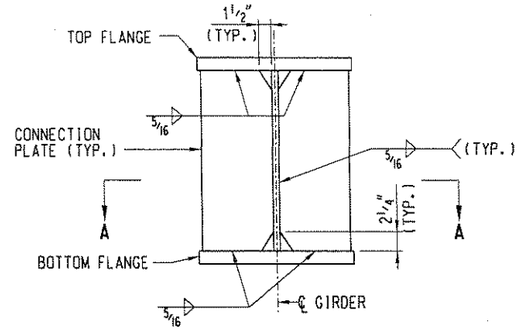

CONNECTION PLATES AT INTERMEDIATE DIAPHRAGMS

NOT TO SCALE

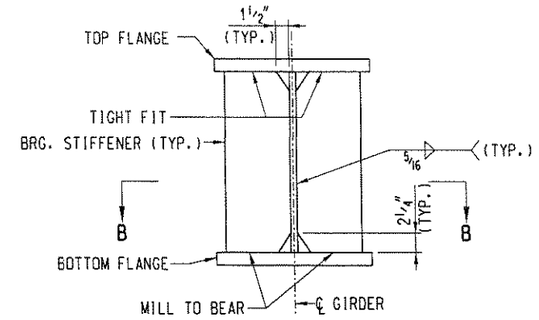

BEARING STIFFENERS AT ABUTMENTS

NOT TO SCALE

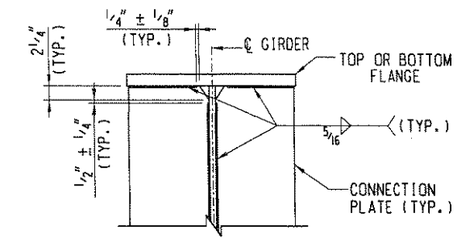

WELD DETAIL

NOT TO SCALE

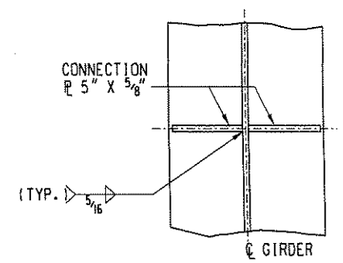

SECTION A-A

NOT TO SCALE

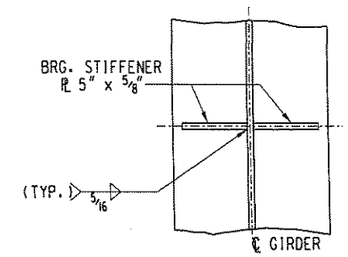

SECTION B-B

NOT TO SCALE

NOTES:

1. FOR GENERAL NOTES, SEE SHEETS B2 & B3.
2. BOLTS SHALL BE 7/8" DIA. HIGH STRENGTH BOLTS UNLESS NOTED OTHERWISE.
3. CONNECTION PLATES FOR INTERMEDIATE DIAPHRAGMS TO BE SET PERPENDICULAR TO THE FLANGES.
4. BOLT HOLES FOR GIRDER 6 TO GIRDER 5 CONNECTION SHALL BE 1" DIAMETER. BOLT THREADS SHALL BE EXCLUDED FROM THE SHEAR PLANE.

DIAPHRAGM SLOPE TABLE
(LOOKING AHEAD STATION)

FROM	TO	SLOPE & DIRECTION (LEFT TO RIGHT)
G1	G2	0.5% UPWARD
G2	G3	2.25% DOWNWARD
G3	G4	2.25% DOWNWARD
G4	G5	2.25% DOWNWARD

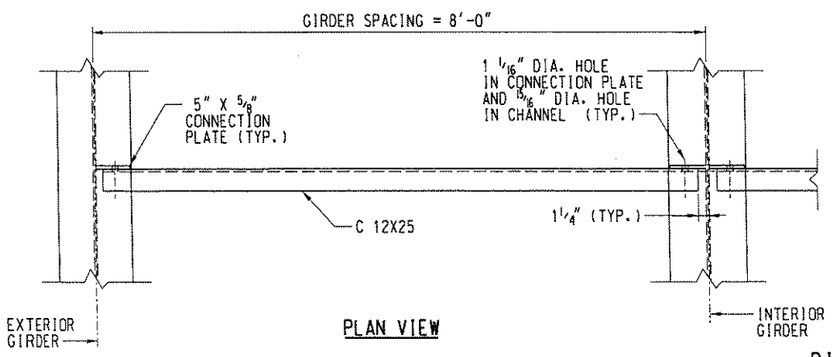

PLAN VIEW

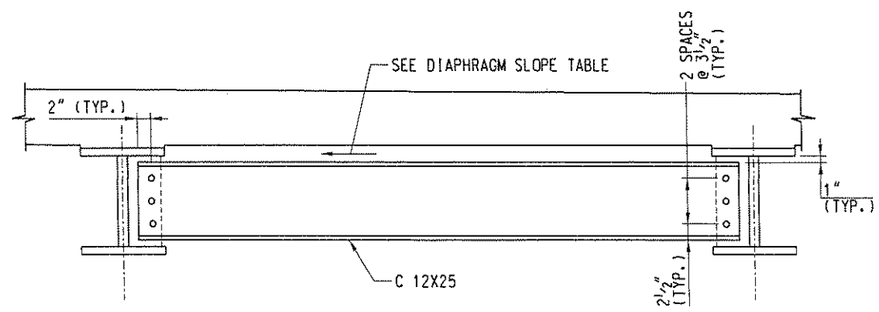

ELEVATION VIEW

DIAPHRAGMS

SCALE: 1" = 1'-0"

NO.	REVISION	DATE:	BY:

W. V. DEPARTMENT OF TRANSPORTATION
DIVISION OF HIGHWAYS - ENGINEERING DIVISION

SCOTT SLAB BRIDGE REPLACEMENT
BRIDGE NO. 10570
GIRDER & DIAPHRAGM DETAILS

DESIGNED WJW	DATE 07-05
DRAWN WJW/JFD	07-05
CHECKED JML	07-05
CHECKED JML/BGZ	07-05

URS

SHEET B16 OF B28

BRIDGE NO. 10570

P:\WVDOH SCOTT SLAB BRIDGE\CADD\Structure\PLANS\P S & E Feb 15 2006\str-sup-scottslb3.dgn 8/14/2007 2:28:56 PM
J06C29C98 - BRIDGE b

PROJECT NUMBERS		DISTRICT	COUNTY	SHEET NO.	TOTAL SHTS.
STATE	FEDERAL				
S317-12-0.89 00	BR-0012(042)E	4	HARRISON	53	93

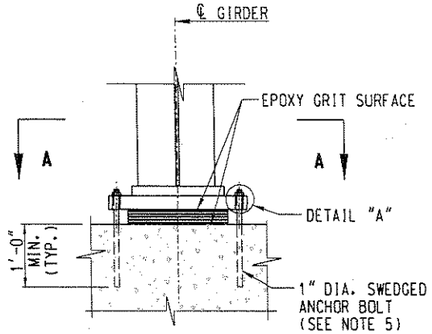

TYPICAL ELEVATION

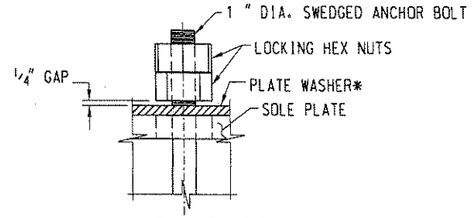

* = 4 1/2" X 2 1/2" X 1/2" AT ABUTMENT 1
2 1/2" X 2 1/2" X 1/2" AT ABUTMENT 2

DETAIL "A"

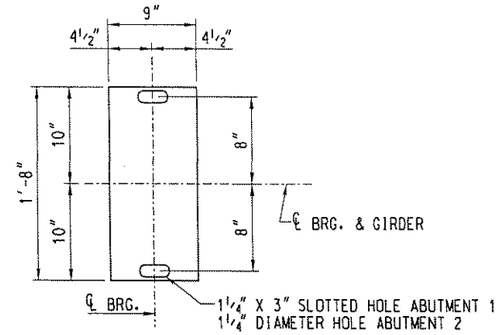

STEEL SOLE PLATE

SCALE: 1 1/2" = 1'-0"
(EXPANSION BEARING SHOWN. FIXED BEARING SIMILAR EXCEPT AS NOTED)

SOLE PLATE DIMENSIONS

		ABUTMENT 1	ABUTMENT 2
GIRDER 1	A	1 13/16"	1 11/16"
	B	1 11/16"	1 13/16"
GIRDER 2	A	1 13/16"	1 3/4"
	B	1 11/16"	1 3/4"
GIRDER 3	A	1 3/4"	1 3/4"
	B	1 3/4"	1 3/4"
GIRDER 4	A	1 13/16"	1 3/4"
	B	1 11/16"	1 3/4"
GIRDER 5	A	1 3/4"	1 3/4"
	B	1 3/4"	1 3/4"
GIRDER 6	A	-	1 3/8"
	B	-	1 5/8"

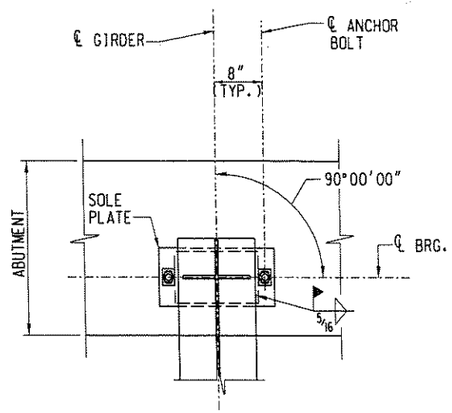

SECTION A-A
(GIRDERS 1 THRU 5)

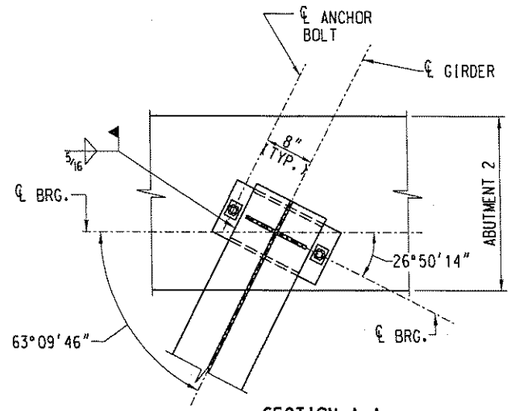

SECTION A-A
(GIRDER 6 ONLY)

BEARING LAYOUT
SCALE: 1" = 1'-0"

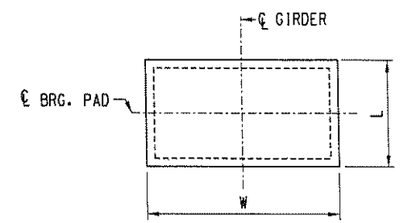

PLAN

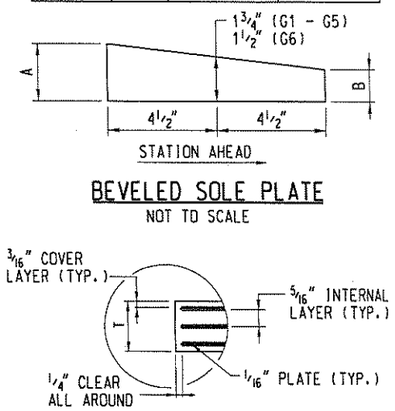

BEVELED SOLE PLATE
NOT TO SCALE

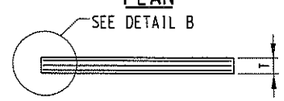

DETAIL B

ELASTOMERIC BEARING PAD DATA

LOCATION	TYPE	NO. REQUIRED	DEAD LOAD (KIPS) MAX.	DEAD LOAD (KIPS) MIN.	LIVE LOAD + IMPACT (KIPS)	ROTATION (RADIANS)	L (INCHES)	W (INCHES)	T (INCHES)	NO. OF INTERNAL STL. PLATES	NO. OF INTERNAL ELASTOMERIC LAYERS
ABUT. 1	LAMINATED	5	33	29	79	0.0051	8	13	1 15/16	5	4
ABUT. 2	LAMINATED	6	33	29	79	0.0051	7	12	1 3/16	3	2

LAMINATED ELASTOMERIC BEARING PAD DETAILS
NOT TO SCALE

NOTES:

1. FOR GENERAL NOTES, SEE SHEETS B2 & B3.
2. FOR FRAMING PLAN, SEE SHEET B14.
3. FOR GIRDER DETAILS, SEE SHEETS B15 & B16.
4. INSTALL GIRDERS AND BEARINGS TO ENSURE FULL CONTACT WITH BEARING SURFACES. IF FULL CONTACT IS NOT ACHIEVED AFTER THE DECK IS IN PLACE, FIELD ADJUSTMENTS OR MODIFICATIONS WILL BE MADE BY THE CONTRACTOR TO ENSURE FULL CONTACT AND ARE SUBJECT TO THE APPROVAL OF THE ENGINEER.
5. ANCHOR BOLTS SHALL BE CAST-IN-PLACE OR GROUTED INTO 3" DIAMETER FORMED HOLES.

NO.	REVISION	DATE:	BY:

W. V. DEPARTMENT OF TRANSPORTATION
DIVISION OF HIGHWAYS - ENGINEERING DIVISION

SCOTT SLAB BRIDGE REPLACEMENT
BRIDGE NO. 10570
BEARING DETAILS

DESIGNED WJW	DATE 07-05
DRAWN JFD	07-05
CHECKED BGZ/JET	07-05
CHECKED JET	07-05

URS

SHEET B17 OF B28
BRIDGE NO. 10570

P:\WVDOH SCOTT SLAB BRIDGE\CADD\Structure\PLANS\P S & E Feb 15 2006\str_sup_scottslb2.dgn 8/14/2007 2:28:21 PM
J06229C98 - BRIDGE b

PROJECT NUMBERS		DISTRICT	COUNTY	SHEET NO.	TOTAL SHTS.
STATE	FEDERAL				
S317-12-0.89 00	BR-0012(042)E	4	HARRISON	54	93

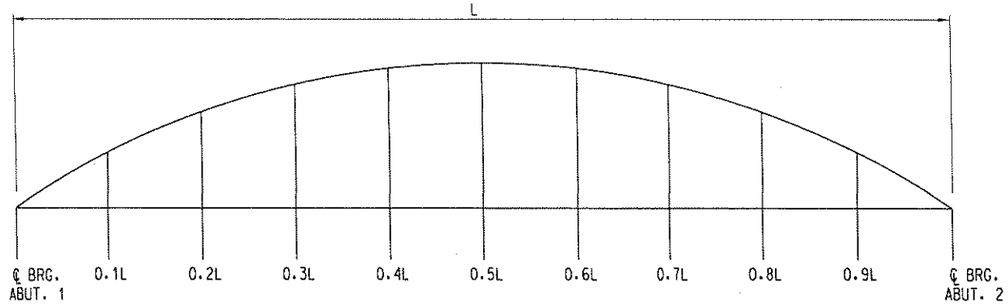

CAMBER TABLE (INCHES)

GIRDER	ITEM	BRG.	0.1L	0.2L	0.3L	0.4L	0.5L	0.6L	0.7L	0.8L	0.9L	BRG.
1	A	0	0.056	0.107	0.147	0.173	0.182	0.173	0.147	0.107	0.056	0
	B	0	0.438	0.828	1.134	1.328	1.394	1.328	1.134	0.828	0.438	0
	C	0	0.026	0.050	0.068	0.080	0.084	0.080	0.068	0.050	0.026	0
	D	0	0.079	0.197	0.289	0.342	0.360	0.344	0.298	0.223	0.123	0
	E	0	0.599	1.182	1.638	1.923	2.020	1.925	1.647	1.208	0.643	0
2	A	0	0.056	0.107	0.147	0.173	0.182	0.173	0.147	0.107	0.056	0
	B	0	0.476	0.901	1.234	1.445	1.517	1.445	1.234	0.901	0.476	0
	C	0	0.026	0.050	0.068	0.080	0.084	0.080	0.068	0.050	0.026	0
	D	0	-0.074	-0.087	-0.042	0.054	0.205	0.411	0.673	0.643	0.332	0
	E	0	0.484	0.971	1.407	1.752	1.988	2.109	2.122	1.701	0.890	0
3	A	0	0.056	0.107	0.147	0.173	0.182	0.173	0.147	0.107	0.056	0
	B	0	0.476	0.901	1.234	1.445	1.517	1.445	1.234	0.901	0.476	0
	C	0	0.026	0.050	0.068	0.080	0.084	0.080	0.068	0.050	0.026	0
	D	0	-0.242	-0.455	-0.614	-0.713	-0.751	-0.727	-0.640	-0.489	-0.276	0
	E	0	0.316	0.603	0.835	0.985	1.032	0.971	0.809	0.569	0.282	0
4	A	0	0.056	0.107	0.147	0.173	0.182	0.173	0.147	0.107	0.056	0
	B	0	0.476	0.901	1.234	1.445	1.517	1.445	1.234	0.901	0.476	0
	C	0	0.026	0.050	0.068	0.080	0.084	0.080	0.068	0.050	0.026	0
	D	0	-0.226	-0.470	-0.657	-0.777	-0.827	-0.805	-0.712	-0.545	-0.308	0
	E	0	0.332	0.588	0.792	0.921	0.956	0.893	0.737	0.513	0.250	0
5	A	0	0.256	0.489	0.680	0.808	0.855	0.808	0.680	0.489	0.256	0
	B	0	0.491	0.929	1.272	1.489	1.564	1.489	1.272	0.929	0.491	0
	C	0	0.034	0.064	0.088	0.103	0.109	0.103	0.088	0.064	0.034	0
	D	0	-0.206	-0.492	-0.716	-0.863	-0.928	-0.910	-0.807	-0.619	-0.350	0
	E	0	0.575	0.990	1.324	1.537	1.600	1.490	1.233	0.863	0.431	0
6	A	0	0.008	0.014	0.020	0.023	0.024	0.023	0.020	0.014	0.008	0
	B	0	0.089	0.168	0.230	0.270	0.283	0.270	0.230	0.168	0.089	0
	C	0	0.005	0.009	0.013	0.015	0.015	0.015	0.013	0.009	0.005	0
	D	0	-0.079	-0.144	-0.194	-0.227	-0.241	-0.236	-0.211	-0.164	-0.094	0
	E	0	0.023	0.047	0.069	0.081	0.081	0.072	0.052	0.027	0.008	0

A = REQUIRED CAMBER DUE TO SELF- WEIGHT OF STEEL DEFLECTION

B = REQUIRED CAMBER DUE TO NON-COMPOSITE DEAD LOAD DEFLECTION - CONCRETE DECK & SIP FORMS

C = REQUIRED CAMBER DUE TO COMPOSITE DEAD LOAD DEFLECTION - BARRIERS

D = REQUIRED CAMBER DUE TO DECK GEOMETRY

E = A + B+ C + D = NET CAMBER AT ERECTION

NOTES:

1. DEFLECTION DUE TO COMPOSITE DEAD LOADS DOES NOT INCLUDE FUTURE WEARING SURFACE.
2. FOR DECK PLACEMENT SEQUENCE, SEE SHEET B19.
3. FOR FINISHED DECK ELEVATIONS, SEE SHEET B21.

NO.	REVISION	DATE:	BY:

W. V. DEPARTMENT OF TRANSPORTATION
DIVISION OF HIGHWAYS - ENGINEERING DIVISION

SCOTT SLAB BRIDGE REPLACEMENT
BRIDGE NO. 10570
CAMBER TABLE

DESIGNED WJW	DATE 07-05	
DRAWN WJW	07-05	
CHECKED JML	07-05	
CHECKED JML	07-05	

URS

SHEET B18 OF B28
BRIDGE NO. 10570

P:\WVDOH SCOTT SLAB BRIDGE\CADD\Structure\PLANS\P S & E Feb 15 2006\sp_des_scottslbl.dgn 8/14/2007 2:07:49 PM
J08C29C98 - BRIDGE b

PROJECT NUMBERS		DISTRICT	COUNTY	SHEET NO.	TOTAL SHTS.
STATE	FEDERAL				
S317-12-0.89 00	BR-0012(042)E	4	HARRISON	55	93

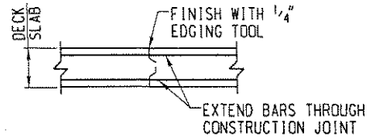

CONSTRUCTION JOINT DETAIL

SCALE: 3/4" = 1'-0"

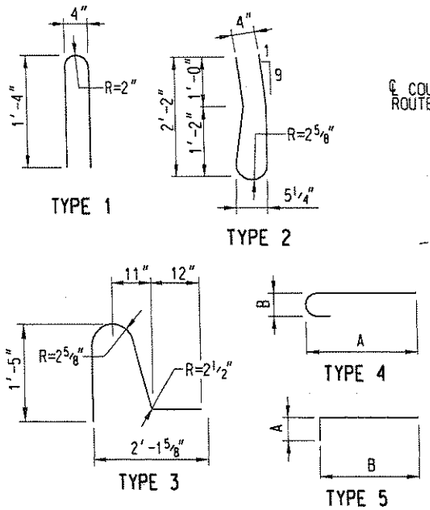

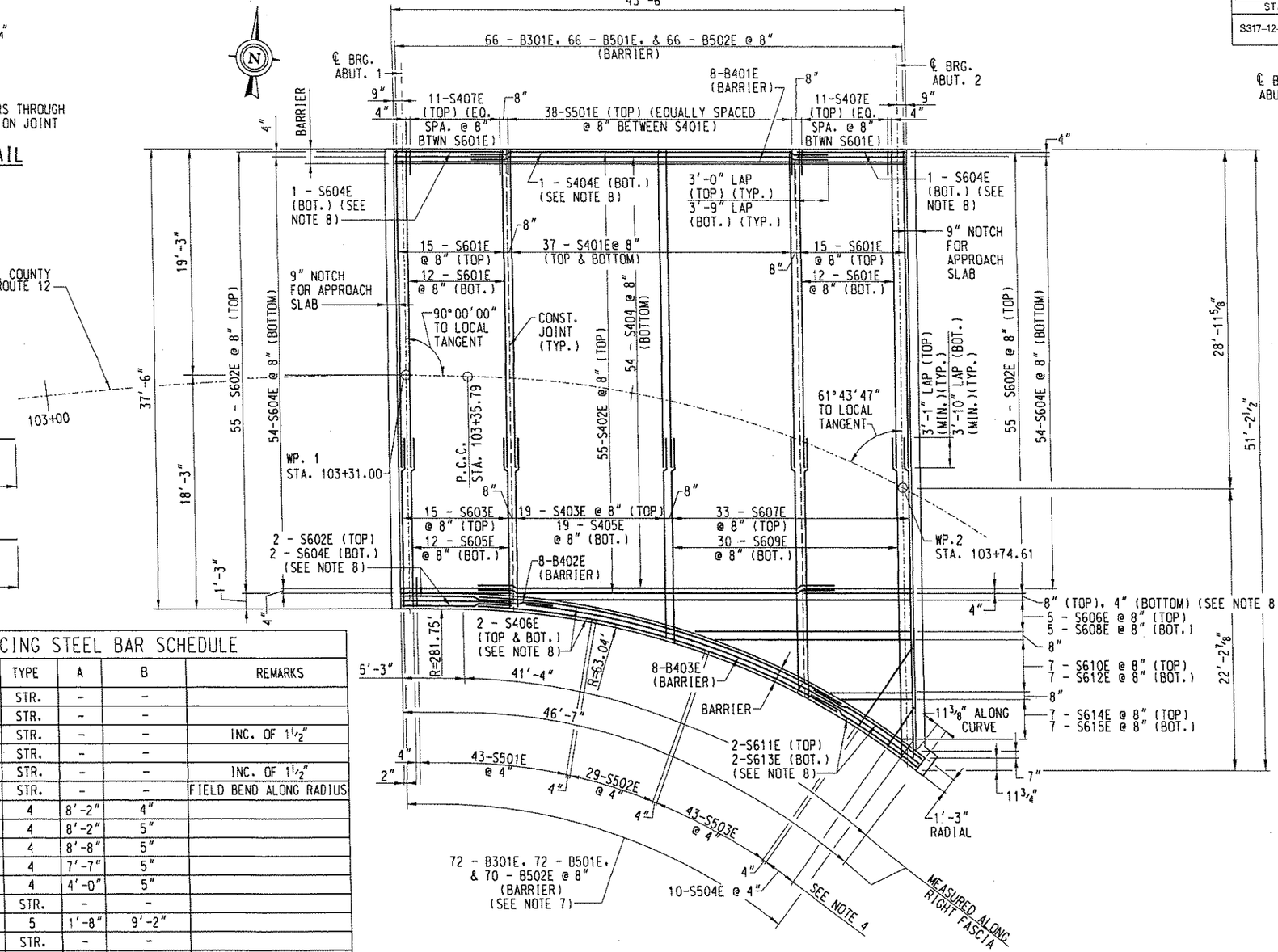

SLAB PLAN

SCALE: 3/16" = 1'-0"

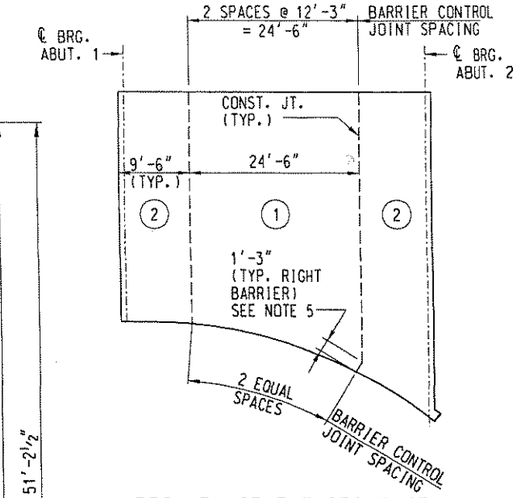

DECK PLACEMENT SEQUENCE

NOT TO SCALE

NOTES:

1. FOR GENERAL NOTES, SEE SHEETS B2 AND B3.
2. FOR TYPICAL DECK SECTION AND DETAILS, SEE SHEET B20.
3. POUR 1 SHALL OBTAIN A COMPRESSIVE STRENGTH OF 2000 PSI BEFORE POUR 2 IS MADE. NO ALTERNATE PLACEMENT SEQUENCE WILL BE PERMITTED.
4. RIGHT OVERHANG S501E, S502E, S503E, AND S504E BARS TO BE PLACED RADIALLY WITH 4" SPACING MEASURED AT FASCIA END OF BARS.
5. ORIENT CONSTRUCTION JOINT RADIALLY TO RIGHT BARRIER.
6. FORM BARRIER CONTROL JOINT RADIALLY TO RIGHT BARRIER.
7. B301E, B501E, AND B502E RIGHT BARRIER BARS ARE PLACED TOGETHER. ADDITIONAL TWO B301E AND B501E BARS ARE LOCATED AT ABUTMENT 2 END OF BARRIER.
8. STAGGER SPACING FOR ALL TOP AND BOTTOM LONGITUDINAL BARS AS SHOWN, EXCEPT ONE ADDITIONAL BOTTOM BAR AT LEFT EDGE OF DECK SHALL BE IN LINE WITH TOP LONGITUDINAL BAR. SEE TYPICAL DECK SECTION.
9. FOR CONSTRUCTION LOAD LIMITATIONS, SEE GENERAL NOTES, SHEET B3.

SUPERSTRUCTURE REINFORCING STEEL BAR SCHEDULE

BAR LOCATION	MARK	QTY	SIZE	LENGTH	TYPE	A	B	REMARKS
SLAB	S401E	74	4	26'-6"	STR.	-	-	
	S402E	55	4	30'-10"	STR.	-	-	
	S403E	19	4	14'-1" TO 16'-4"	STR.	-	-	INC. OF 1 1/2"
	S404E	55	4	32'-4"	STR.	-	-	
	S405E	19	4	14'-10" TO 17'-1"	STR.	-	-	INC. OF 1 1/2"
	S406E	4	4	33'-7"	STR.	-	-	FIELD BEND ALONG RADIUS
	S407E	22	4	8'-8"	4	8'-2"	4"	
	S501E	81	5	8'-9"	4	8'-2"	5"	
	S502E	29	5	9'-3"	4	8'-8"	5"	
	S503E	43	5	8'-2"	4	7'-7"	5"	
	S504E	10	5	4'-7"	4	4'-0"	5"	
	S601E	54	6	26'-6"	STR.	-	-	
	S602E	112	6	10'-10"	5	1'-8"	9'-2"	
	S603E	15	6	14'-0"	STR.	-	-	
	S604E	112	6	9'-0"	STR.	-	-	
	S605E	12	6	14'-9"	STR.	-	-	
	S606E	5	6	20'-2" TO 31'-6"	5	1'-8"	18'-6" TO 29'-10"	INC. OF 2'-10"
	S607E	33	6	16'-7" TO 27'-7"	STR.	-	-	INC. OF 4 1/8"
	S608E	5	6	19'-2" TO 32'-3"	STR.	-	-	INC. OF 3'-3 1/4"
	S609E	30	6	17'-4" TO 27'-3 5/8"	STR.	-	-	INC. OF 4 1/8"
	S610E	7	6	9'-6" TO 18'-3"	5	1'-8"	7'-10" TO 16'-7"	INC. OF 1'-5 1/2"
	S611E	2	6	12'-4"	5	1'-4"	11'-0"	FIELD BEND ALONG RADIUS
	S612E	7	6	8'-1" TO 17'-1"	STR.	-	-	INC. OF 1'-6"
	S613E	2	6	11'-0"	STR.	-	-	FIELD BEND ALONG RADIUS
	S614E	7	6	2'-0" TO 8'-0"	5	1'-4"	8" TO 6'-8"	INC. OF 1'-0"
	S615E	7	6	1'-0" TO 7'-3"	STR.	-	-	INC. OF 1'-0 1/2"
BARRIER	B301E	138	3	2'-10 1/4"	1	-	-	
	B401E	8	4	43'-2"	STR.	-	-	
	B402E	8	4	12'-0"	STR.	-	-	FIELD BEND ALONG RADIUS
	B403E	8	4	37'-6"	STR.	-	-	FIELD BEND ALONG RADIUS
	B501E	138	5	4'-7 1/4"	2	-	-	
	B502E	136	5	4'-3 1/4"	3	-	-	

NO.	REVISION	DATE:	BY:

W. V. DEPARTMENT OF TRANSPORTATION
DIVISION OF HIGHWAYS - ENGINEERING DIVISION

SCOTT SLAB BRIDGE REPLACEMENT
BRIDGE NO. 10570
DECK PLAN & SUPERSTRUCTURE REINFORCING STEEL BAR SCHEDULE

DESIGNED	WJW/JML	01/06
DRAWN	JFD	01/06
CHECKED	JML/BGZ	01/06
CHECKED	JML/BGZ	01/06

URS

SHEET B19 OF B28
BRIDGE NO. 10570

P:\WVDOH SCOTT SLAB BRIDGE\CADD\Structure\PLANS\P S & E Feb 15 2006\str-slb_scottslbl.dgn 8/14/2007 2:26:57 PM

PROJECT NUMBERS		DISTRICT	COUNTY	SHEET NO.	TOTAL SHTS.
STATE	FEDERAL				
S317-12-0.89 00	BR-0012(042)E	4	HARRISON	56	93

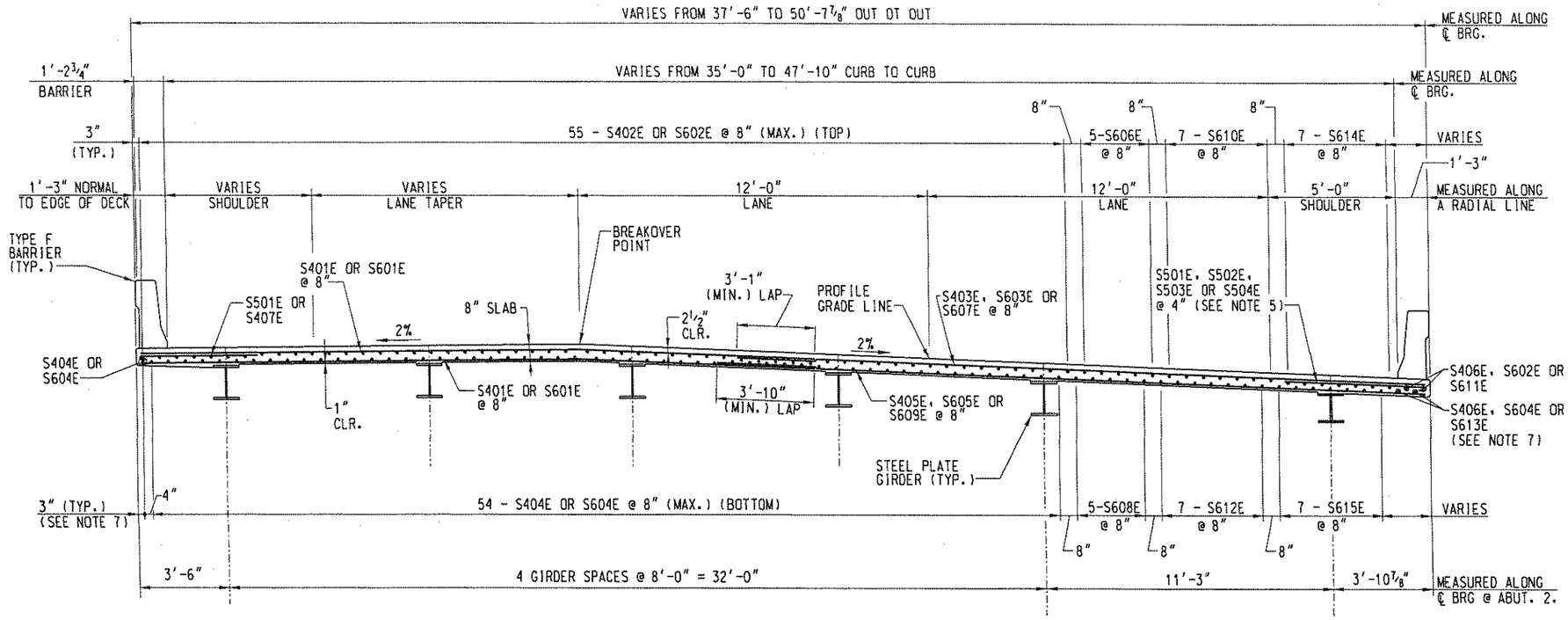

TYPICAL DECK SECTION

SCALE: 3/8" = 1'-0"

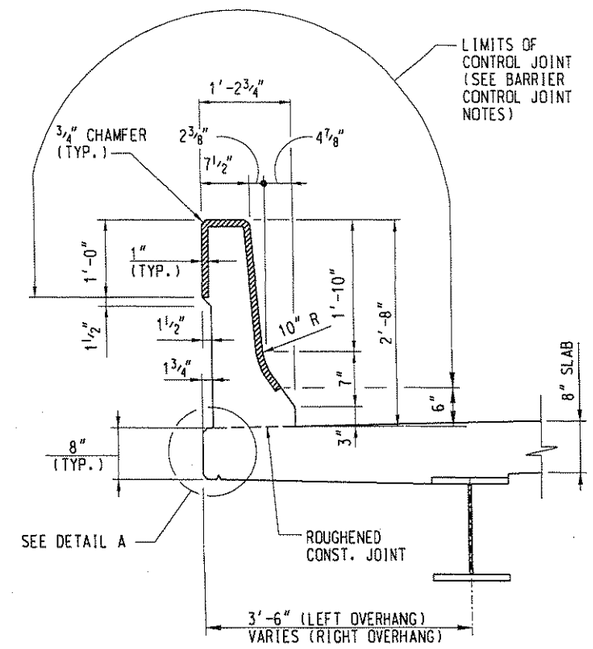

BARRIER DETAIL

SCALE: 1" = 1'-0"

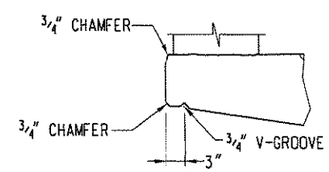

DETAIL A

NOT TO SCALE

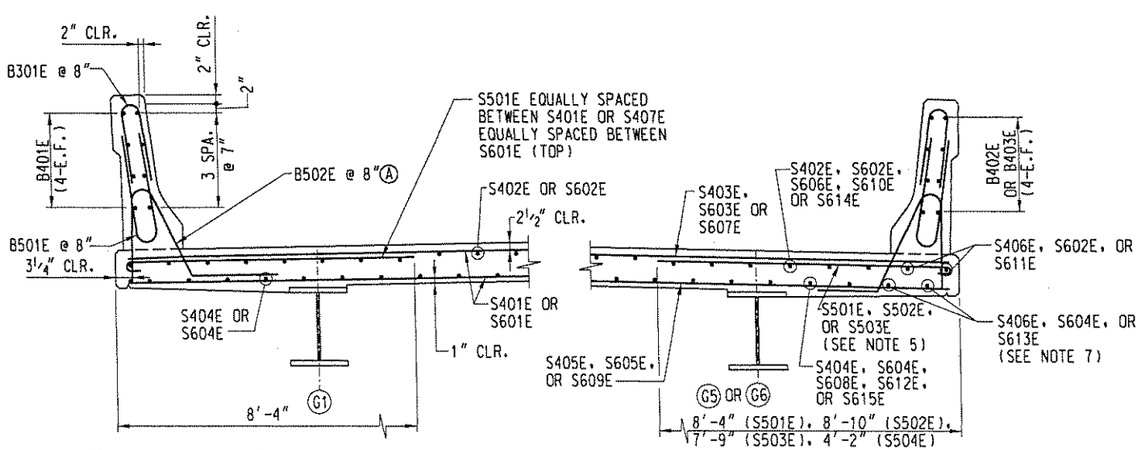

(A) BEND HORIZONTAL LEG IN BAR TO MATCH DECK CROSS-SLOPE

BARRIER AND DECK OVERHANG REINFORCING DETAIL

SCALE: 3/4" = 1'-0"

NOTES:

1. FOR GENERAL NOTES, SEE SHEETS B2 AND B3.
2. FOR DECK PLAN, SEE SHEET B19.
3. FOR REINFORCING STEEL BAR SCHEDULE, SEE SHEET B19.
4. THE BARRIER AND BARRIER REINFORCING STEEL SHALL BE CONSTRUCTED PLUMB.
5. RIGHT OVERHANG S501E, S502E, S503E, AND S504E BARS TO BE PLACED RADIALLY WITH 4" SPACING MEASURED AT FASCIA END OF BARS.
6. SEE DECK PLAN, SHEET B19 FOR ADDITIONAL SLAB END ZONE REINFORCEMENT BARS.
7. STAGGER SPACING FOR ALL TOP AND BOTTOM LONGITUDINAL BARS EXCEPT ONE ADDITIONAL LONGITUDINAL BAR AT LEFT EGDE OF DECK SHALL BE IN LINE WITH TOP LONGITUDINAL BAR.
8. FOR CONSTRUCTION EQUIPMENT LOAD LIMITATIONS, SEE GENERAL NOTES, SHEET B3.

BARRIER CONTROL JOINT NOTES:

1. SAWCUT 1" DEEP CONTROL JOINTS ALONG THE PERIMETER OF THE BARRIER AS SHOWN AND AS SOON AS THE SAW CAN BE OPERATED WITHOUT DAMAGING THE CONCRETE.
2. USE AN EDGE GUIDE, FENCE, OR JIG TO ENSURE THAT THE CUT JOINT IS STRAIGHT, TRUE AND ALIGNED ON ALL FACES OF THE BARRIER. THE JOINT WIDTH SHALL BE THE WIDTH OF THE SAW BLADE, A NOMINAL WIDTH OF 1/4 INCH.
3. PLACE CONTROL JOINTS AS SHOWN ON THE SLAB PLAN.
4. SEAL THE PERIMETER OF THE CONTROL JOINT TO A MINIMUM DEPTH OF 3/4 INCH WITH A POLYURETHANE OR POLYMERIC MATERIAL CONFORMING TO ASTM C920, TYPE S. LEAVE THE BOTTOM ONE-HALF INCH OF BOTH THE INSIDE AND THE OUTSIDE FACES OF THE BARRIER UNSEALED TO ALLOW ANY WATER WHICH MAY ENTER THE JOINT TO ESCAPE.

NO.	REVISION	DATE:	BY:

W. V. DEPARTMENT OF TRANSPORTATION
DIVISION OF HIGHWAYS - ENGINEERING DIVISION

SCOTT SLAB BRIDGE REPLACEMENT
BRIDGE NO. 10570
TYPICAL DECK SECTION & DETAILS

DESIGNED	WJW/JML	DATE 01/06
DRAWN	WJW/JFD	01/06
CHECKED	JML/BGZ	01/06
CHECKED	JML/BGZ	01/06

URS

SHEET B20 OF B28
BRIDGE NO. 10570

P:\WVDOH SCOTT SLAB BRIDGE\CADD\Structure\PLANS\P S & E Feb 15 2006\str-slb-scottslb2.dgn 8/14/2007 2:27:21 PM
J06C29C98 - BRIDGE b

PROJECT NUMBERS		DISTRICT	COUNTY	SHEET NO.	TOTAL SHTS.
STATE	FEDERAL				
S317-12-0.89 00	BR-0012(042)E	4	HARRISON	57	93

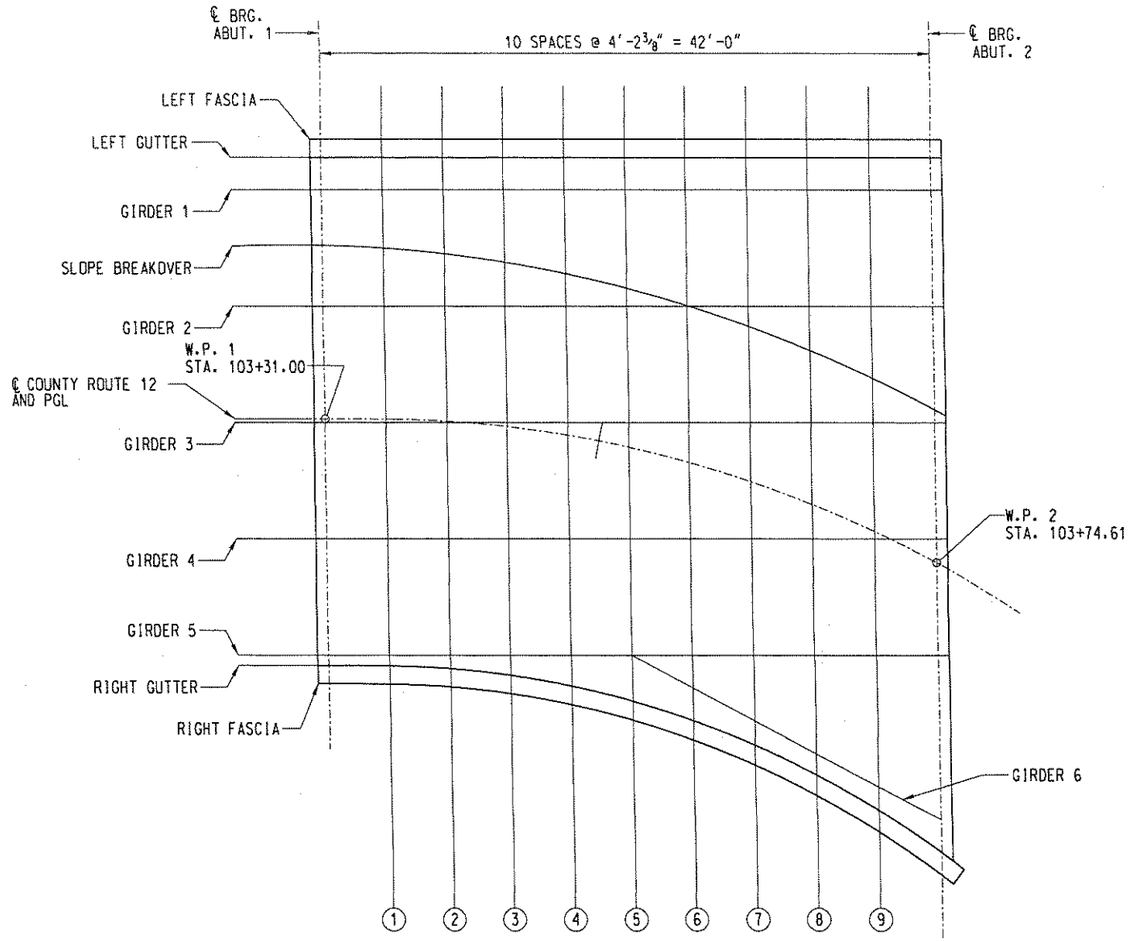

FINISHED DECK ELEVATIONS

NOT TO SCALE

LOCATION	℄ BRG. ABUT. 1	1	2	3	4	5	6	7	8	9	℄ BRG. ABUT. 2
LEFT FASCIA	922.56	922.51	922.46	922.41	922.35	922.30	922.24	922.18	922.11	922.04	921.98
LEFT GUTTER	922.59	922.53	922.48	922.43	922.38	922.32	922.26	922.20	922.13	922.06	922.00
GIRDER 1	922.63	922.58	922.53	922.47	922.42	922.36	922.30	922.23	922.17	922.10	922.03
BREAKOVER	922.71	922.65	922.60	922.55	922.51	922.46	922.41	922.36	922.30	922.25	922.20
GIRDER 2	922.62	922.57	922.52	922.47	922.43	922.40	922.37	922.34	922.29	922.22	922.14
GIRDER 3	922.46	922.41	922.35	922.30	922.26	922.22	922.19	922.16	922.14	922.12	922.11
PGL	922.47	922.41	922.35	922.30	922.24	922.19	922.13	922.07	922.01	921.95	921.89
GIRDER 4	922.30	922.24	922.19	922.13	922.08	922.04	922.01	921.98	921.95	921.93	921.92
GIRDER 5	922.14	922.08	922.02	921.96	921.90	921.86	921.82	921.78	921.76	921.74	921.73
GIRDER 6	----	----	----	----	----	----	921.75	921.67	921.58	921.51	921.45
RIGHT GUTTER	922.13	922.07	922.00	921.93	921.85	921.78	921.71	921.63	921.55	921.47	921.39
RIGHT FASCIA	922.10	922.04	921.97	921.90	921.82	921.75	921.67	921.60	921.52	921.43	921.34

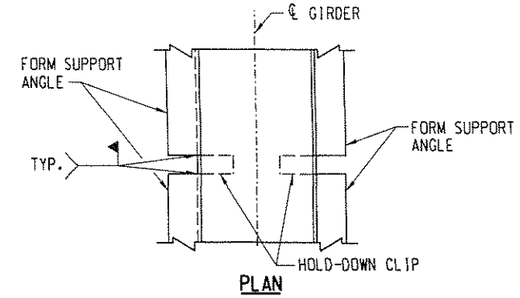

PLAN

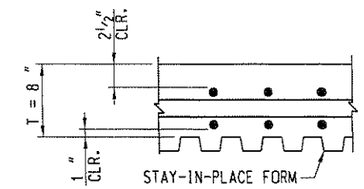

SECTION A-A

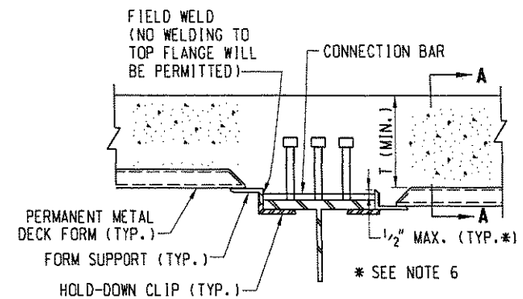

ELEVATION

STAY-IN-PLACE FORM DETAILS

NOT TO SCALE

NOTES:

1. THE ELEVATIONS SHOWN ARE FINISHED PAVEMENT ELEVATIONS.
2. PGL = PROFILE GRADE LINE.
3. AFTER ALL GIRDERS HAVE BEEN ERECTED AND FALSEWORK REMOVED, THE ENGINEER SHALL TAKE ELEVATIONS ALONG THE TOPS OF GIRDERS AT POINTS WHERE THE ELEVATIONS ARE SHOWN IN THE TABLE. THE DIFFERENCE BETWEEN THESE ELEVATIONS AND THE GIVEN TOP OF SLAB ELEVATIONS PLUS THE AMOUNT OF DEFLECTION DUE TO DEAD LOAD OF CONCRETE WILL BE THE THICKNESS OF SLAB OVER THE GIRDERS AT THESE POINTS. THE MINIMUM THICKNESS MEASURED FROM THE TOP OF THE DECK SLAB TO THE TOP OF THE GIRDER WEB AT THE CENTERLINE OF THE GIRDER SHALL NOT BE LESS THAN 10 1/8". IF THE GIRDERS HAVE EXCESS CAMBER AND THIS MINIMUM CAN NOT BE OBTAINED, THE GRADE LINE SHALL BE ADJUSTED TO OBTAIN THE MINIMUM SLAB THICKNESS.
4. FOR DECK PLACEMENT SEQUENCE, SEE SHEET B19.
5. FOR GIRDER CAMBER TABLE, SEE SHEET B18.
6. THE FORM SUPPORTS SHALL NOT PROTRUDE INTO THE DECK MORE THAN 1/2" ABOVE THE TOP OF THE CONNECTION BAR NOR SHALL THEY INTERFERE WITH THE NOMINAL SLAB THICKNESS.

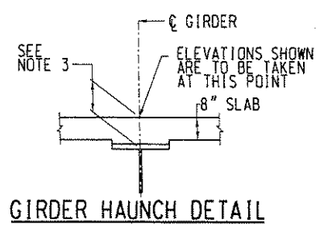

GIRDER HAUNCH DETAIL

NOT TO SCALE

NO.	REVISION	DATE:	BY:

W. V. DEPARTMENT OF TRANSPORTATION
DIVISION OF HIGHWAYS - ENGINEERING DIVISION

SCOTT SLAB BRIDGE REPLACEMENT
BRIDGE NO. 10570
FINISHED DECK ELEVATIONS & STAY-IN-PLACE FORM DETAILS

DESIGNED WJW	DATE 07-05
DRAWN WJW	07-05
CHECKED JML	07-05
CHECKED JML	07-05

URS

SHEET B21 OF B28
BRIDGE NO. 10570

P:\WVDOH SCOTT SLAB BRIDGE\CADD\Structure\PLANSVP S & E Feb 15 2006\str_dea_scottslb2.dgn 8/14/2007 2:08:21 PM
J08C29C98 - BRIDGE b

PROJECT NUMBERS		DISTRICT	COUNTY	SHEET NO.	TOTAL SHTS.
STATE	FEDERAL				
S317-12-0.89 00	BR-0012(042)E	4	HARRISON	58	93

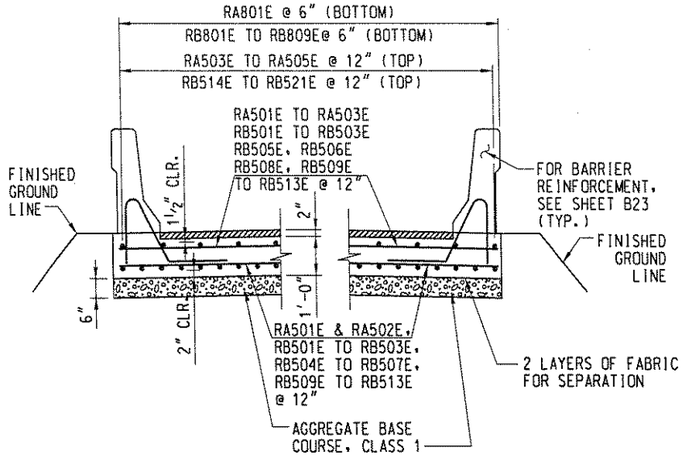

SECTION A-A

SCALE: ½" = 1'-0"

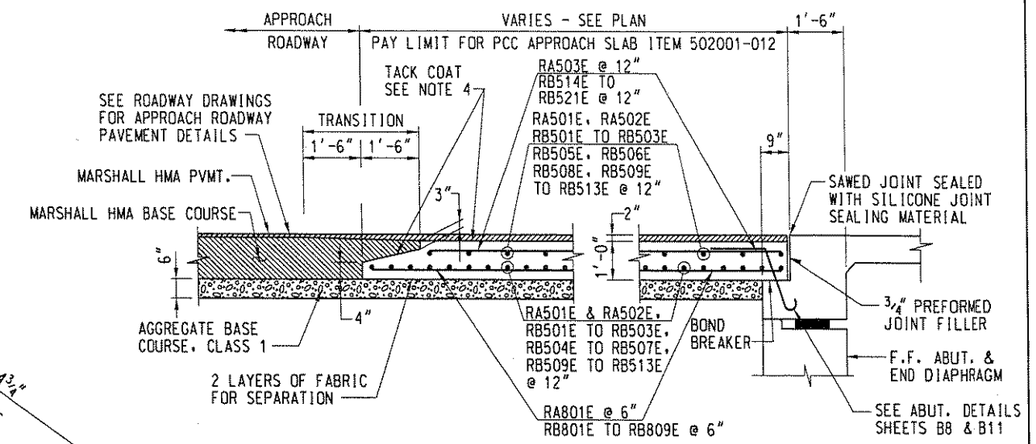

SECTION B-B

SCALE: ½" = 1'-0"

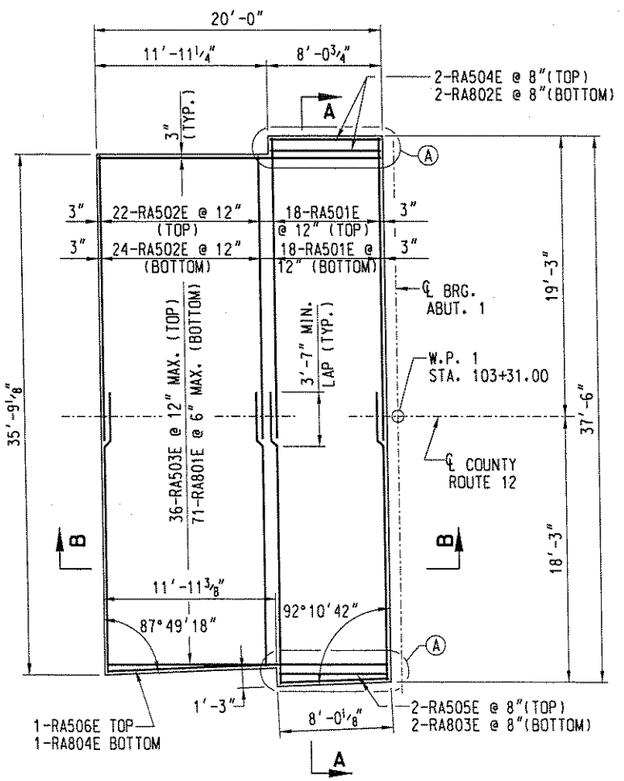

Ⓐ FOR BARRIER DETAILS AND REINFORCEMENT. SEE DETAIL A, SHEET B23.

Ⓑ FOR BARRIER DETAILS AND REINFORCEMENT. SEE DETAIL B, SHEET B23.

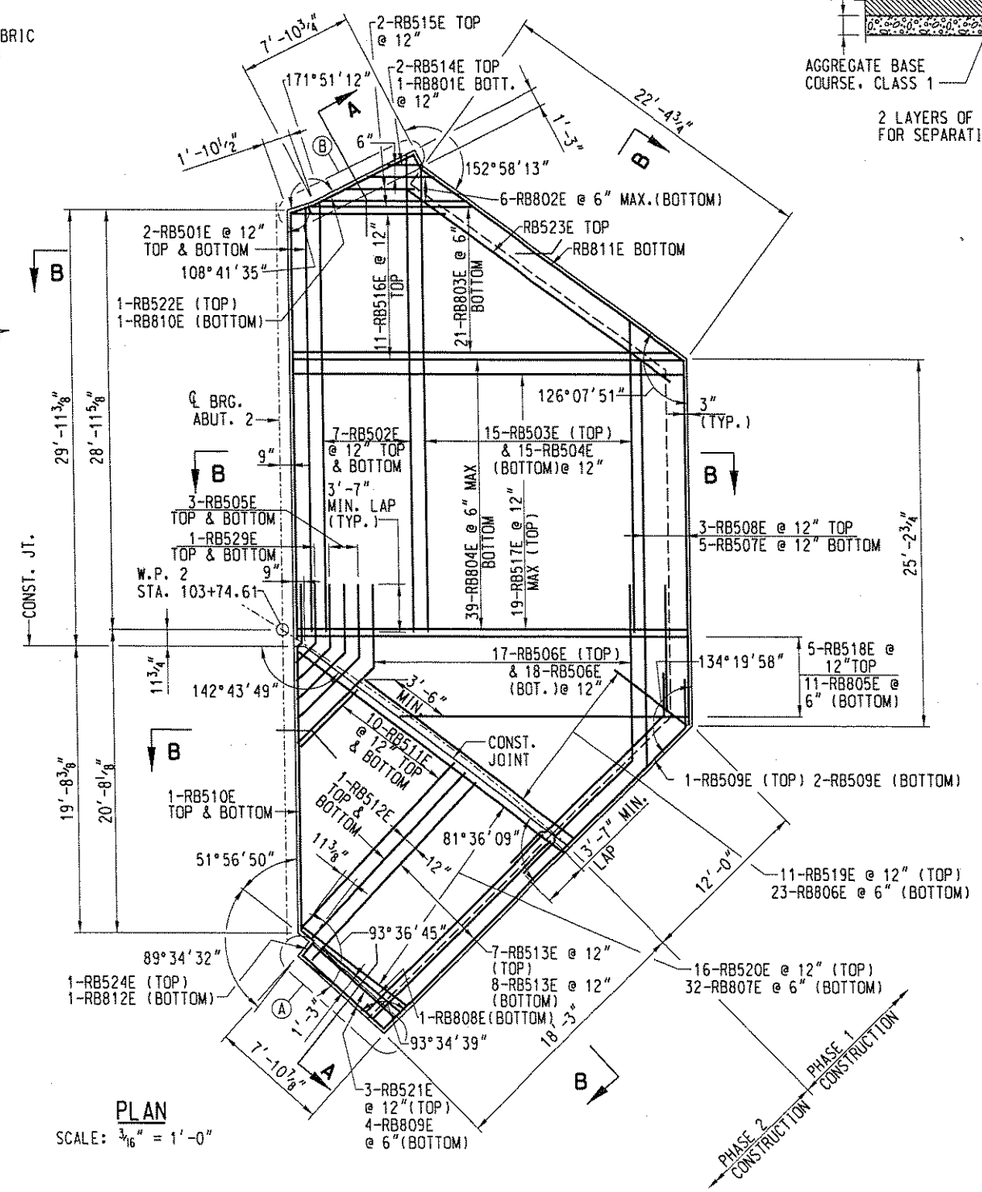

PLAN

SCALE: 3/16" = 1'-0"

LEGEND:

F.F. = FRONT FACE
E.F. = EACH FACE
W.P. = WORK POINT

NOTES:

1. FOR GENERAL NOTES, SEE SHEETS B2 AND B3.
2. FOR ADDITIONAL DETAILS, SEE SHEET B23.
3. FOR APPROACH SLAB REINFORCING STEEL BAR SCHEDULE, NOTES AND QUANTITIES, SEE SHEET B24.
4. BITUMINOUS MATERIAL SHALL BE APPLIED AS A TACK COAT TO THE SURFACE OF THE PCC APPROACH SLAB, INCLUDING ALONG THE SLOPED SURFACE OF THE CONCRETE APPROACH SLAB WITHIN THE 1'-6" TRANSITION WIDTH.
5. PROVIDE ¾" PREFORMED JOINT FILLER BETWEEN ABUTMENT AND APPROACH SLAB AND BETWEEN BARRIER ON ABUTMENT AND BARRIER ON APPROACH SLAB.

NO.	REVISION	DATE:	BY:

W. V. DEPARTMENT OF TRANSPORTATION
DIVISION OF HIGHWAYS - ENGINEERING DIVISION

SCOTT SLAB BRIDGE REPLACEMENT
BRIDGE NO. 10570
APPROACH SLAB DETAILS - 1

DESIGNED	LCI	07-05
DRAWN	JFD	07-05
CHECKED	JET	07-05
CHECKED	JET	07-05

URS

SHEET B22 OF B28
BRIDGE NO. 10570

P:\WVDOH SCOTT SLAB BRIDGE\CADD\Structure\PLANS\P S & E Feb 15 2006\str_aps_scottslb1.dgn 8/14/2007 2:02:56 PM
J08C29C98 - BRIDGE b

PROJECT NUMBERS		DISTRICT	COUNTY	SHEET NO.	TOTAL SHTS.
STATE	FEDERAL				
S317-12-0.89 00	BR-0012(042)E	4	HARRISON	59	93

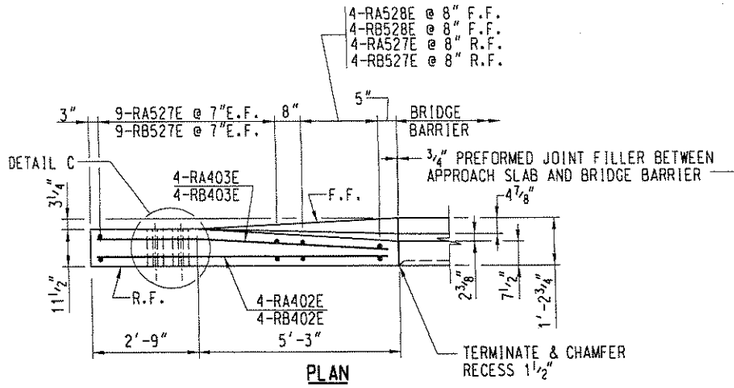

PLAN

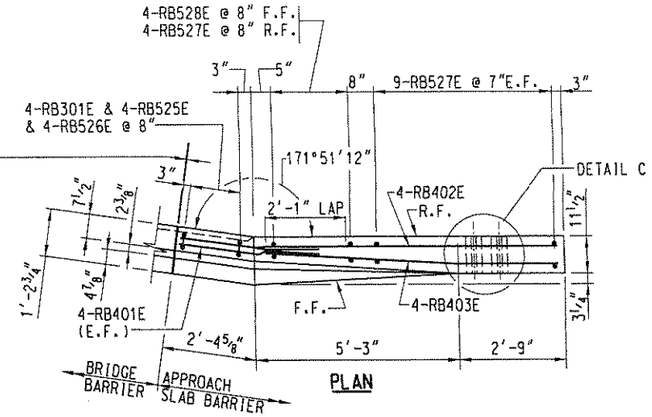

PLAN

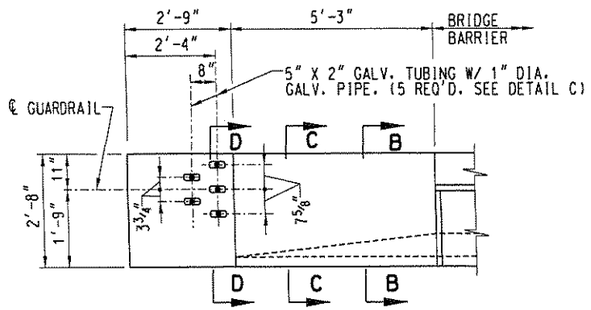

ELEVATION

DETAIL A

SCALE: 1/2" = 1'-0"

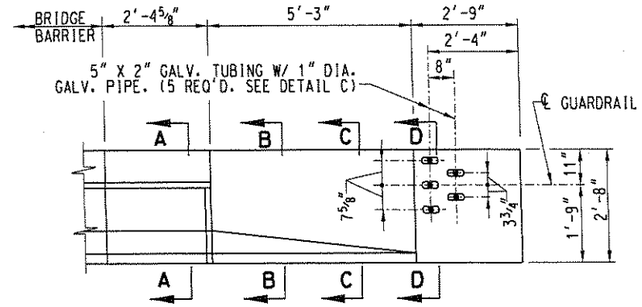

ELEVATION

DETAIL B

SCALE: 1/2" = 1'-0"

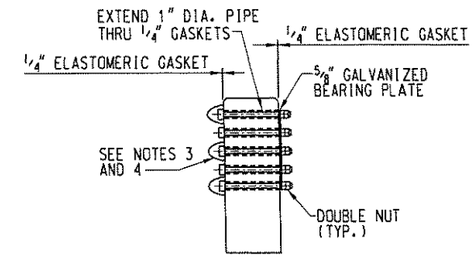

DETAIL C

SCALE: 3/4" = 1'-0"

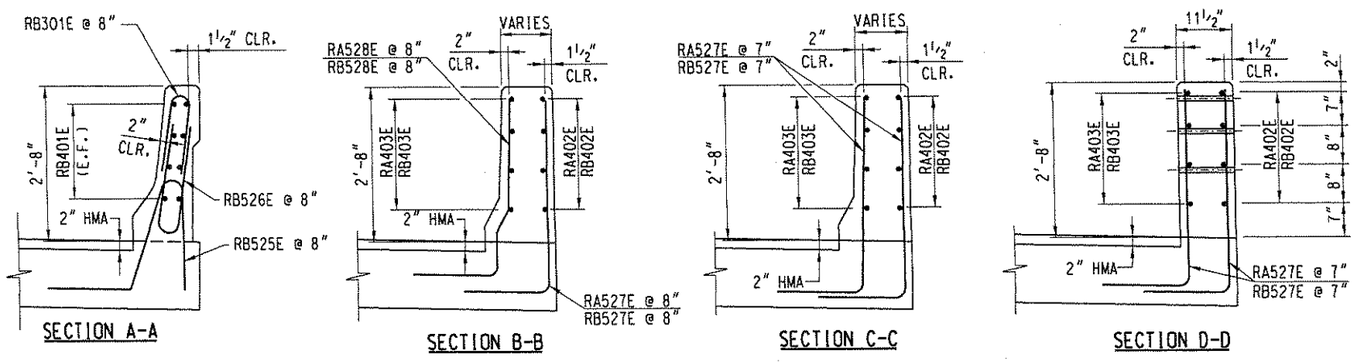

TYPICAL SECTIONS FOR DETAILS A & B

SCALE: 3/4" = 1'-0"

(APPROACH SLAB REINFORCEMENT NOT SHOWN FOR CLARITY)

LEGEND:

E.F. = EACH FACE
F.F. = FRONT FACE
R.F. = REAR FACE

NOTES:

1. FOR GENERAL NOTES, SEE SHEETS B2 & B3.
2. FOR APPROACH SLAB REINFORCING STEEL BAR SCHEDULE, NOTES AND QUANTITIES, SEE SHEET B24.
3. CONNECT THE THREE BEAM TERMINAL PLATE AND 5/8" BEARING PLATE WITH 7/8" DIA. BOLTS AND TWO NUTS. TIGHTEN FIRST NUT AGAINST BEARING PLATE AND SECOND NUT AGAINST FIRST NUT TO PREVENT NUTS FROM LOOSENING. CENTER THE BOLTS IN THE 5" X 2" TUBING.
4. ALL GALVANIZATION SHALL BE IN ACCORDANCE WITH AASHTO M111.

NO.	REVISION	DATE:	BY:

W. V. DEPARTMENT OF TRANSPORTATION
DIVISION OF HIGHWAYS - ENGINEERING DIVISION

SCOTT SLAB BRIDGE REPLACEMENT
BRIDGE NO. 10570
APPROACH SLAB DETAILS - 2

DESIGNED	LCI	07-05
DRAWN	JFD	07-05
CHECKED	JET	07-05
CHECKED	JET	07-05

URS

SHEET B23 OF B28

BRIDGE NO. 10570

P:\WVDOH SCOTT SLAB BRIDGE\CADD\Structure\PLANS\P S & E Feb 19 2006\str_app_scotslb2.dgn 8/14/2007 2:03:23 PM

PROJECT NUMBERS STATE	PROJECT NUMBERS FEDERAL	DISTRICT	COUNTY	SHEET NO.	TOTAL SHTS.
S317-12-0.89 00	BR-0012(042)E	4	HARRISON	60	93

ABUTMENT 1 APPROACH SLAB

MARK	QTY	SIZE	LENGTH	TYPE	A	B	C	REMARKS
RA402E	8	4	7'-10"	6				
RA403E	8	4	7'-8"	STR				
RA501E	36	5	20'-5 3/8"	STR				
RA502E	46	5	19'-5"	STR				
RA503E	36	5	17'-11"	STR				
RA504E	2	5	7'-5 1/4"	STR				
RA505E	2	5	7'-6 1/8"	STR				
RA506E	1	5	11'-8 3/8"	STR				
RA527E	44	5	4'-5"	4	3'-2"	1'-0"		
RA528E	8	5	4'-5"	5				
RA801E	71	8	19'-5"	STR				
RA802E	2	8	7'-5 1/4"	STR				
RA803E	2	8	7'-6 1/8"	STR				
RA804E	1	8	11'-8 3/8"	STR				

APPROACH SLAB

ITEM NUMBER	DESCRIPTION	UNIT	QUANTITY* ABUT. 1	QUANTITY* ABUT. 2
207034-000	FABRIC FOR SEPARATION	SY	156	272
307001-000	AGGREGATE BASE COURSE, CLASS 1	CY	13	23
401002-001	MARSHALL, HOT MIX ASPHALT WEARING COURSE, STONE OR GRAVEL, TYPE 1	TN	9	15
408002-001	BITUMINOUS MATERIAL	GAL	25	43
502001-012	12 INCH PORTLAND CEMENT CONCRETE APPROACH SLAB	SY	81	141
	EPOXY COATED REINFORCING STEEL BAR (FOR INFORMATION ONLY)	LB	6209	11073

* SEE NOTE 3

ABUTMENT 2 APPROACH SLAB

MARK	QUANTITY	SIZE	LENGTH	TYPE	A	B	C	REMARKS
RB301E	4	3	2'-10 1/4"	1				
RB401E	8	4	4'-1 3/8"	7	1'-8 3/8"	2'-5"	7	
RB402E	8	4	7'-8"	STR				
RB403E	8	4	7'-10"	6				
RB501E	4	5	VARIES 31'-3 1/8" TO 31'-7 1/8"	STR				VARY BY 0'-4"
RB502E	14	5	VARIES 30'-6" TO 33'-6"	STR				VARY BY 0'-6"
RB503E	15	5	VARIES 20'-0 1/2" TO 30'-10"	STR				VARY BY 0'-8 3/4"
RB504E	15	5	VARIES 22'-5 1/2" TO 32'-8"	STR				VARY BY 0'-8 3/4"
RB505E	6	5	VARIES 6'-9 5/8" TO 10'-4 1/8"	7	VARIES 2'-9 5/8" TO 5'-6 7/8"	VARIES 4'-0" TO 4'-10"	1	LA VARY BY 1'-4 5/8" LB VARY BY 0'-5" L VARY BY 1'-10"
RB506E	35	5	VARIES 10'-5 1/4" TO 22'-5 3/4"	7	LA1 TO LA18 VARIES 5'-2 1/2" TO 9'-11 1/8"	LB1 TO LB18 VARIES 5'-2 3/4" TO 12'-5 7/8"	1	LA VARY BY 0'-3 3/8" LB VARY BY 0'-5 1/8" L VARY BY 0'-8 1/2"
RB507E	5	5	VARIES 25'-0" TO 31'-1"	STR				VARY BY 1'-6 1/4"
RB508E	3	5	VARIES 23'-7 1/4" TO 26'-1 3/8"	STR				VARY BY 1'-3 1/16"
RB509E	3	5	19'-4"	7	15'-8"	3'-8"	1	
RB510E	2	5	19'-5 1/2"	STR				
RB511E	20	5	VARIES 5'-4 1/4" TO 15'-5 3/4"	STR				VARY BY 1'-1 1/2"
RB512E	2	5	15'-11"	STR				
RB513E	15	5	VARIES 17'-3 1/2" TO 17'-10 1/2"	STR				VARY BY 0'-1"
RB514E	2	5	VARIES 1'-5" TO 2'-10 5/8"	STR				VARY BY 1'-5 5/8"
RB515E	2	5	VARIES 5'-2 3/4" TO 8'-6 3/4"	STR				VARY BY 3'-4"
RB516E	11	5	VARIES 11'-4 1/4" TO 25'-0"	STR				VARY BY 1'-4 3/8"
RB517E	19	5	25'-5 5/8"	STR				
RB518E	5	5	VARIES 18'-6 1/4" TO 23'-9 1/8"	STR				VARY BY 1'-3 3/4"
RB519E	11	5	VARIES 4'-0 5/8" TO 15'-8 5/8"	STR				VARY BY 1'-2"
RB520E	16	5	VARIES 7'-4 1/8" TO 21'-0"	STR				VARY BY 0'-10 7/8"
RB521E	3	5	VARIES 5'-10 1/4" TO 6'-0 1/2"	STR				VARY BY 0'-1 1/8"
RB522E	1	5	9'-3 3/4"	7	1'-7 3/4"	7'-8"	7	
RB523E	1	5	21'-9"	STR				
RB524E	1	5	2'-5 1/2"	8	1'-1 1/2"	1'-4"		
RB525E	4	5	4'-10 3/8"	3				
RB526E	4	5	4'-8"	2				
RB527E	44	5	4'-5"	4	3'-2"	1'-0"		
RB528E	8	5	4'-5"	5				
RB529F	2	5	5'-0"	7	1'-5"	3'-7"	1	
RB801E	1	8	1'-5"	STR				
RB802E	6	8	2'-9" TO 11'-1"	STR				VARY BY 1'-8"
RB803E	21	8	VARIES 13'-2 1/2" TO 26'-11 1/2"	STR				VARY BY 0'-8 1/4"
RB804E	39	8	27'-0"	STR				
RB805E	11	8	VARIES 19'-5 1/4" TO 26'-0"	STR				VARY BY 0'-7 7/8"
RB806E	23	8	VARIES 4'-5" TO 17'-3"	STR				VARY BY 0'-7"
RB807E	32	8	VARIES 8'-11 3/4" TO 22'-6"	STR				VARY BY 0'-5 1/4"
RB808E	1	8	4'-6"	STR				
RB809E	4	8	VARIES 7'-4 1/4" TO 7'-6 1/2"	STR				VARY BY 0'-0 3/4"
RB810E	1	8	9'-3 3/4"	7	1'-7 3/4"	7'-8"	7	
RB811E	1	8	23'-5"	7	1'-0 3/4"	22'-4 1/4"	2	
RB812E	1	8	2'-5 1/2"	8				

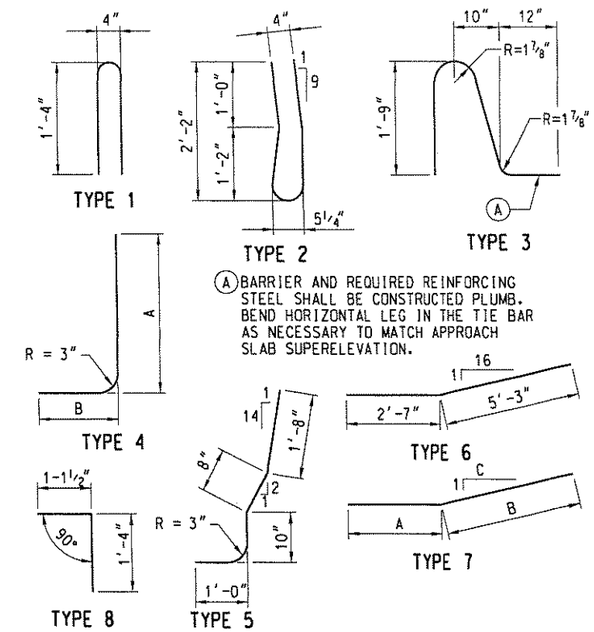

NOTES:

1. ALL CONCRETE IN THE APPROACH SLAB SHALL BE CLASS "B" CONCRETE. CURING OF THE APPROACH SLAB SHALL BE BY BURLAP AND WATER IN ACCORDANCE WITH THE STANDARD SPECIFICATIONS.
2. SILICONE JOINT SEALANT SHALL CONFORM TO SUBSECTION 708.4 OF THE STANDARD SPECIFICATIONS.
3. QUANTITIES ARE GIVEN FOR INFORMATION ONLY. ALL ITEMS IN TABLE ARE ROADWAY PAY ITEMS AND ARE INCLUDED IN THE ROADWAY SUMMARY AND ESTIMATE OF QUANTITIES.

NO.	REVISION	DATE:	BY:

W. V. DEPARTMENT OF TRANSPORTATION
DIVISION OF HIGHWAYS - ENGINEERING DIVISION

SCOTT SLAB BRIDGE REPLACEMENT
BRIDGE NO. 10570
APPROACH SLAB DETAILS - 3

DESIGNED	LCI	07-05
DRAWN	JFD/ALR	07-05
CHECKED	JET	07-05
CHECKED	JML	07-05

URS

SHEET B24 OF B28
BRIDGE NO. 10570

P:\WVDOH SCOTT SLAB BRIDGE\CADD\Structure\PLANS\P S & E Feb 15 2006\str_app_scottslb3.dgn 8/14/2007 2:03:59 PM
J06229C98 - BRIDGE b

PROJECT NUMBERS		DISTRICT	COUNTY	SHEET NO.	TOTAL SHTS.
STATE	FEDERAL				
S317-12-0.89 00	BR-0012(042)E	4	HARRISON	61	93

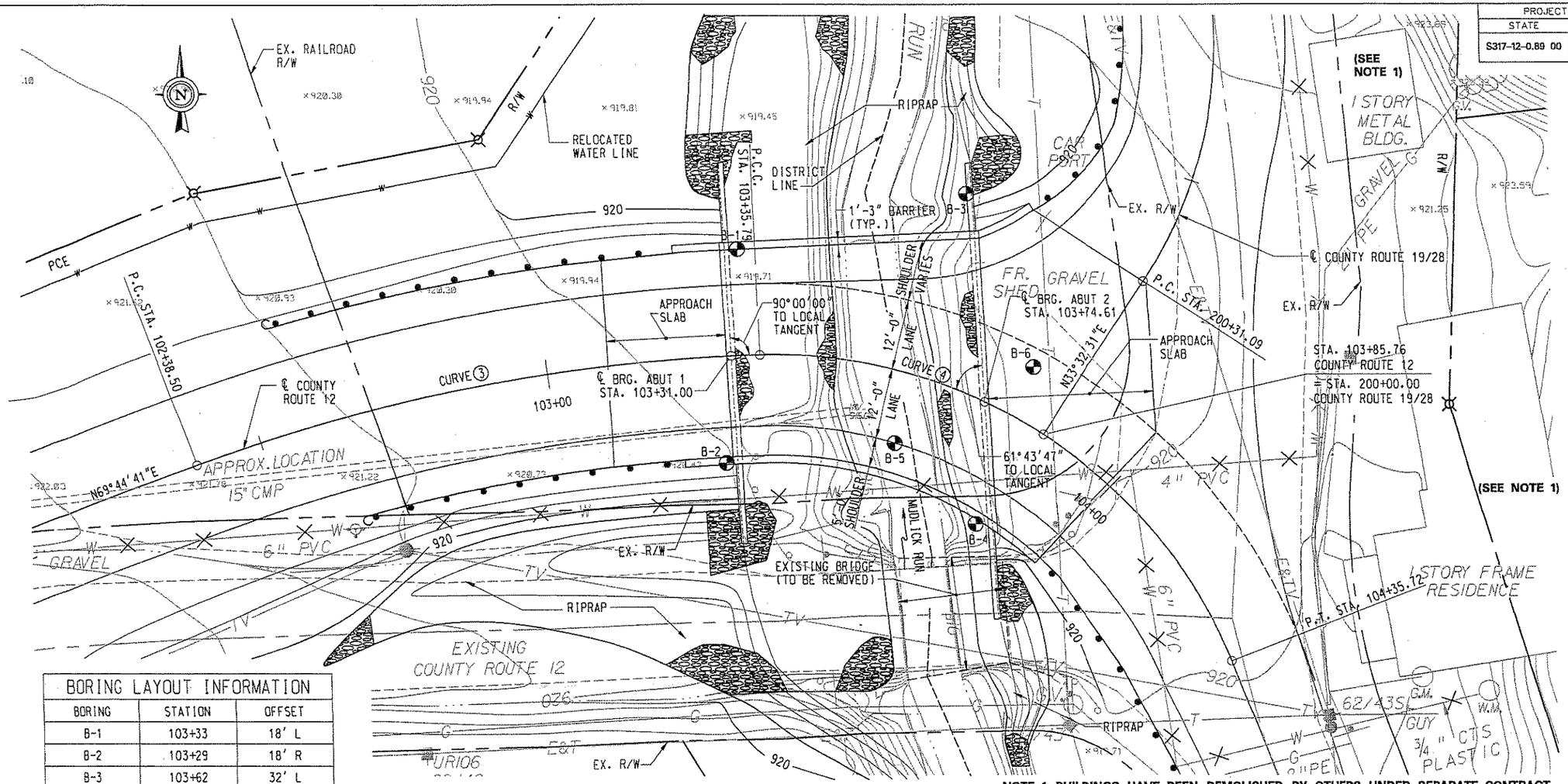

NOTE 1: BUILDINGS HAVE BEEN DEMOLISHED BY OTHERS UNDER SEPARATE CONTRACT.

PLAN
SCALE: 1" = 10'-0"

℄ COUNTY ROUTE 12 HORIZONTAL CURVE DATA

CURVE ③	CURVE ④
P.C. STA. 102+38.50	P.C.C. STA. 103+35.79
P.I. STA. 102+87.58	P.I. STA. 103+93.17
P.C.C. STA. 103+35.79	P.T. STA. 104+35.72
R = 300'	R = 81.29'

℄ COUNTY ROUTE 12 PROFILE GRADE DATA

P.V.T. STA. 102+48.01
ELEV. 923.57

-1.33%

P.V.I. STA. 105+46.47
ELEV. 919.60

MUDLICK RUN HYDRAULIC DATA

DRAINAGE AREA = 2.69 SQ. MILES
DESIGN FLOOD FREQUENCY = 25 YEARS

	EXISTING	PROPOSED
DISCHARGE	= 888.00 cfs	888.00 cfs
ELEVATION	= 921.10	919.93
VELOCITY	= 5.09 fps	4.55 fps

BORING LAYOUT INFORMATION

BORING	STATION	OFFSET
B-1	103+33	18' L
B-2	103+29	18' R
B-3	103+62	32' L
B-4	103+84	19' R
B-5	103+62	12' R
B-6	103+78	9' L

RIPRAP GRADATION

ROCK SIZE	% PASSING
24	100
12	15-50
6	0-15

COUNTY ROUTE 12 TRAFFIC DESIGN DESIGNATION

ADT (2004) = 1900 vpd
ADT (2024) = 2800 vpd
DHV (2024) = 560 vph
D (2024) = 60% / 40%
T (2024) = 1%
ADTTsl (2004) = 12 tpd
ADTTsl (2024) = 17 tpd
V = 30 mph

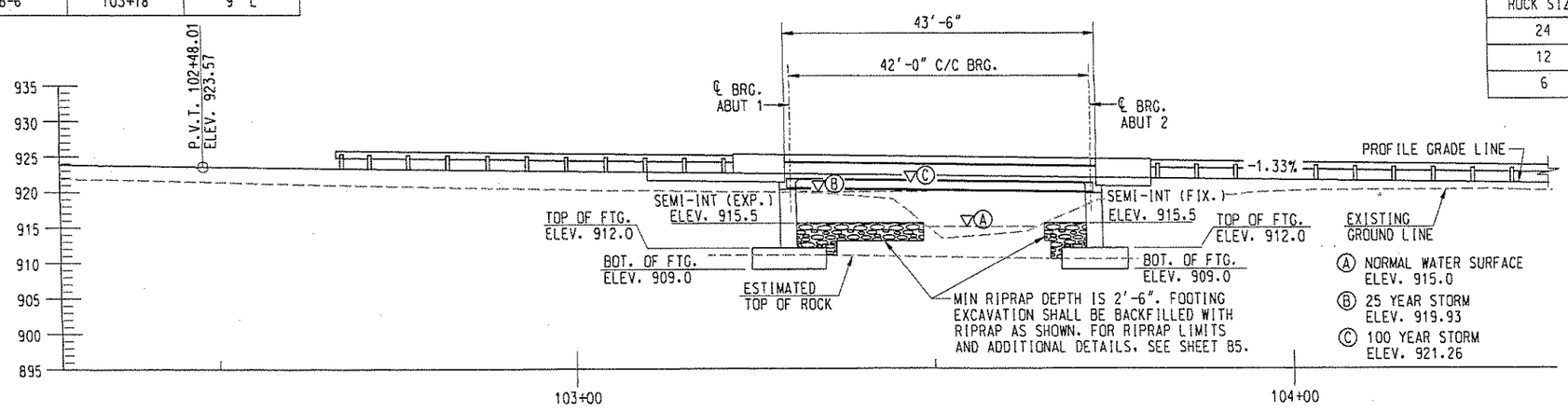

ELEVATION
SCALE: 1" = 10'-0"

NO.	REVISION	DATE:	BY:

W. V. DEPARTMENT OF TRANSPORTATION
DIVISION OF HIGHWAYS - ENGINEERING DIVISION

SCOTT SLAB BRIDGE REPLACEMENT
BRIDGE NO. 10570
SITUATION PLAN

DESIGNED	WJW	DATE 07-05
DRAWN	WJW	07-05
CHECKED	JML	07-05
CHECKED	JML	07-05

URS

SHEET B25 OF B28
BRIDGE NO. 10570

P:\WVDOH SCOTT SLAB BRIDGE\CADD\Structure\PLANS\P S & E Feb 15 2006\wv_sst_scottslab.dgn 8/17/2007 1:24:33 PM

PROJECT NUMBERS		DISTRICT	COUNTY	SHEET NO.	TOTAL SHTS.
STATE	FEDERAL				
S317-12-0.89 00	BR-0012(042)E	4	HARRISON	62	93

BORING: B-2
STATION: 103+29
OFFSET: 18' RIGHT
ELEV. 922.9

A	B	C	D	E	VISUAL DESCRIPTION
1.5	S-1	1-2-3		D-M	Dark brown to brown, dry to moist, very soft to loose, silty SAND w/ gravel and trace organics (roots) EL.919.9
3.0	S-2	1-1-2		D-M	
4.5	S-3	2-3-4		21.6	Brown, moist, loose to med. dense, clayey SAND with some gravel EL.915.4
6.0	S-4	4-4-4		16.8	
7.5	S-5	2-5-6		15.7	
7.9	S-6	50/.4		M-W	Gray to brown, dry to wet, very hard, sandy CLAY with gravel (decomposed claystone) EL.913.1
9.8	S-7	28-50/.3		D	
10.5	R-1	100(0)		--	CLAYSTONE, gray to dark gray, extermely soft to average, (HCSI=0-3), highly weathered, bedding not discernible, extremely close to medium spaced fractures
15.5	R-2	100(60)		--	
20.5	R-3	100(74)		--	Conglomerate of clay and gravel from 9.8 to 10.6 ft. Limestone interbedded throughout Soft seams at 20, 24, 24.5, and 24.7 ft.
25.5	R-4	100(62)		--	45° smooth fracture at 21.5 and 22.2 ft. EL.897.8
30.5	R-5	100(64)		--	LIMESTONE, gray to dk gray, soft to average, (HCSI=2-3), completely to moderately weathered, bedding not discernible, extremely close to medium spaced fractures RD = 0° EL.892.4

WATER LEVEL: DEPTH (FT): 3.5' TIME: 0-HR 30.5ft - END OF HOLE
DEPTH (FT): 3.7' TIME: 24-HR

DRILLING DATES: START: 2/03/05
FINISH: 2/03/05
DRILLER: BILL MINOR/PENNDRILL

0 HR 2/03/05
24 HR 2/04/05
B.F.E. 909.0

BORING: B-1
STATION: 103+33
OFFSET: 18' LEFT
ELEV. 919.0

A	B	C	D	E	VISUAL DESCRIPTION
					3" Topsoil
1.5	S-1	2-3-3		M	Dark brown to brown, moist, med. stiff, sandy SILT with gravel
3.0	S-2	3-3-5		M	
4.5	S-3	7-9-10		20.2	Brown to dark brown, dry to moist, med. dense, clayey SAND w/gravel EL.912.5
6.0	S-4	5-6-6		14.9	
6.7	S-5	6-50/.2		13.9	
7.7	S-6	50/.2		D	Gray, dry, very hard, sandy CLAY with gravel (decomposed claystone) EL.911.0
13.0	R-1	66(28)		--	CLAYSTONE, gray, very soft to soft, (HCSI=1-2), comp. to moderately weathered, bedding not discernible, extremely close to medium spaced fractures RD = 0-10°
18.0	R-2	100(60)		--	45° joint @ 13.8 ft. Limestone interbedded from 13.8 to 14.2 ft.
23.0	R-3	94(66)		--	HCSI = 0 from 19.7 to 20.5 ft. EL.898.0
28.0	R-4	100(56)		--	LIMESTONE, gray, soft to hard, (HCSI=2-4), highly to moderately weathered, bedding not discernible, extremely close to medium spaced fractures RD = 0-10° 30° joint @ 27.3 ft. EL.891.0

WATER LEVEL: DEPTH (FT): 2.2' TIME: 0-HR 28.0ft - END OF HOLE
DEPTH (FT): 2.4' TIME: 24-HR

DRILLING DATES: START: 2/03/05
FINISH: 2/03/05
DRILLER: JIM SACCANI/PENNDRILL

0 HR 2/03/05
24 HR 2/04/05
B.F.E. 909.0

ELEVATION (FT.)

SECTION A-A
SCALE: 1" = 5'

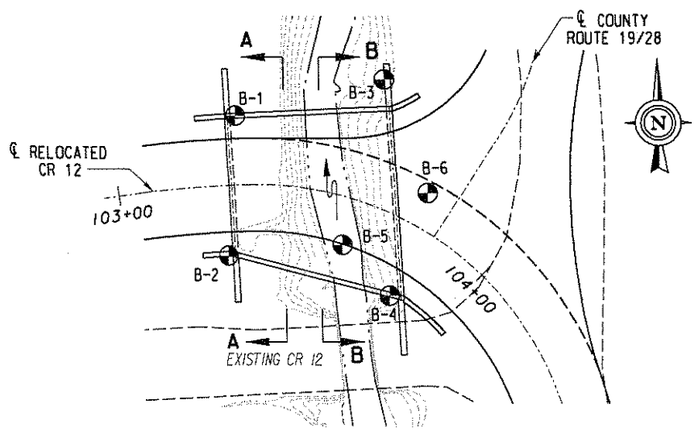

BORING LOCATION PLAN
NTS

LEGEND

COLUMN A - LOWER LIMIT OF SAMPLES AND CORE RUNS
COLUMN B - SAMPLE AND CORE RUN IDENTIFICATION NUMBERS
COLUMN C - SAMPLE BLOWS PER 0.5 FT. WHERE ROCK IS ENCOUNTERED. THE PERCENT CORE RECOVERY IS SHOWN AND THE ROCK QUALITY DESIGNATION (RQD) IS SHOWN IN PARENTHESIS.
COLUMN D - SOIL / ROCK SYMBOLS: CLASSIFICATION AS DETERMINED BY INSPECTOR IN THE FIELD.
COLUMN E - SAMPLE MOISTURE CONTENT (D=DRY, M=MOIST, W=WET, OR MOISTURE CONTENT BASED ON LABORATORY TEST RESULT.)

HAMMER DROP ON SPOON SAMPLER = 30 IN.
HAMMER WEIGHT = 140 LBS.
SIZE OF SAMPLER = 2 IN. O.D.
SIZE OF CORE BIT = NX

▽ = GROUND WATER ELEVATION AT TIME INDICATED

B.F.E. = BOTTOM OF FOOTING ELEVATION

HCSI = REFERS TO THE HARDNESS AND COMPRESSIVE STRENGTH INDEX. VALUES WERE DETERMINED IN THE FIELD AND ARE BASED ON THE WEST VIRGINIA GUIDELINES.

RD = RELATIVE DIP. MEASURED PERPENDICULAR TO THE CORE AXIS.

GENERAL NOTES

1. BORINGS DRILLED BY PENNSYLVANIA DRILLING COMPANY (PENNDRILL) FEBRUARY 2005.
2. THE BORING LOGS AND RELATED INFORMATION DEPICT SUBSURFACE CONDITIONS ONLY AT THE SPECIFIC LOCATIONS AND DATES INDICATED. SUBSURFACE CONDITIONS AND WATER LEVELS AT OTHER LOCATIONS MAY DIFFER FROM THE CONDITIONS REPORTED AT THE SPECIFIC LOCATIONS. ALSO THE PASSAGE OF TIME MAY RESULT IN A CHANGE IN THE CONDITIONS AT ANY BORING LOCATION.

LEGEND OF SYMBOLS

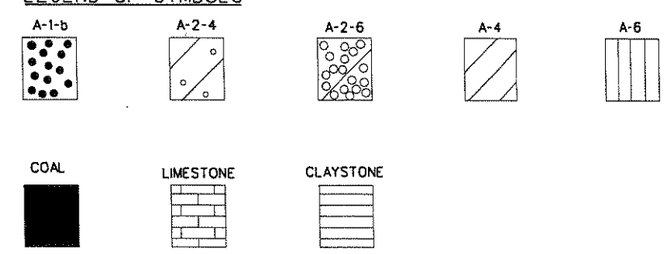

NO.	REVISION	DATE:	BY:

W. V. DEPARTMENT OF TRANSPORTATION
DIVISION OF HIGHWAYS - ENGINEERING DIVISION

SCOTT SLAB BRIDGE REPLACEMENT
BRIDGE NO. 10570

CORE BORINGS - 1

DESIGNED JFD	DATE 2/05
DRAWN JFD	2/05
CHECKED WGK	3/05
CHECKED -	-

URS

SHEET B26 OF B28
BRIDGE NO. 10570

P:\WVDOH SCOTT SLAB BRIDGE\CADD\Structure\PLANS\P S & E Feb 15 2006\SSB12.dgn 6/14/2007 3:05:49 PM
J06C29C9B - BRIDGE b

PROJECT NUMBERS		DISTRICT	COUNTY	SHEET NO.	TOTAL SHTS.
STATE	FEDERAL				
S317-12-0.89 00	BR-0012(042)E	4	HARRISON	63	93

BORING: B-3
STATION: 103+62
OFFSET: 32' LEFT
ELEV. 916.9

A	B	C	D	E	VISUAL DESCRIPTION
1.5	S-1	1/12-1		M	Dk brown,moist,v.soft silty GRAVEL EL.915.4
3.0	S-2	1-4-27		12.2	Gray, moist to dry, dense to very dense, clayey GRAVEL with sand
4.5	S-3	44-43-42		D	
5.6	S-4	10-22-50/.1		4.9	EL.911.3
8.0	R-1	42(0)		--	LIMESTONE, gray, average to hard, (HCSI = 3-4), highly to moderately weathered, extremely to very closely spaced fractures RD = 0-90° EL.908.9
13.0	R-2	90(54)		--	CLAYSTONE, gray, ext.soft to soft, (HCSI=0-2), completely to highly weathered, bedding not discernible, extremely to closely spaced fractures EL.903.9
					COAL EL.903.2
18.0	R-3	66(20)		--	LIMESTONE, dk.gray, average, (HCSI = 3), moderately weathered, bedding not discernible, extremely close to medium spaced fractures RD = 0°
23.0	R-4	80(46)		--	70° fracture @ 14.8 ft. 80° fracture @ 17.8 ft. 60° fracture @ 20.5 ft. soft seam @ 23.7 to 24.2 ft.
26.0	R-5	90(40)		--	CLAYSTONE seam from 22.4 to 23 ft. CLAYSTONE seam from 23.8 to 24.5 ft. EL.890.9

ELEVATION (FT.): 920, 910, 900, 890

0 HR 2/02/05
24 HR 2/03/05
B.F.E. 909.0

WATER LEVEL: DEPTH (FT): 6.2' TIME: 0-HR 26.0ft - END OF HOLE
DEPTH (FT): 6.4' TIME: 24-HR
DRILLING DATES: START: 2/02/05
FINISH: 2/02/05
DRILLER: JIM SACCANI/PENNDRILL

BORING: B-6
STATION: 103+78
OFFSET: 9' LEFT
ELEV. 919.2

A	B	C	D	E	VISUAL DESCRIPTION
1.5	S-1	1-1-2		W	Dark brown, moist to wet, soft to medium stiff, sandy SILT with gravel and trace organics
3.0	S-2	2-3-4		M	
4.5	S-3	ERROR		19.2	EL.916.2
6.0	S-4	4-6-7		11.9	Brown, moist, medium dense, clayey SAND with little gravel EL.912.7
6.5	S-5	32-50/0		M	
11.0	R-1	100(49)			CLAYSTONE, gray, extremely soft to soft, (HCSI=0-2), completely weathered, bedding not discernible, extremely close to closely spaced fractures
16.0	R-2	100(42)			LIMESTONE from 6.8 to 7.8 ft. EL.903.4
					COAL EL.903.0
20.0	R-3	100(25)			LIMESTONE,gray to dk.gray, average to hard,(HCSI=3-4), highly to moderately weathered, bedding not discernible,ext. close to closely spaced fractures EL.899.0
21.0	R-4	100(0)			
26.0	R-5	50(10)			CLAYSTONE, gray, soft, (HCSI=2), completely weathered, bedding not discernible,extremely close to closely spaced fractures conglomerate of soft clay and gravel from 21.5 to 23.5 ft. EL.893.2

0 HR 2/03/05
24 HR 2/04/05
B.F.E. 909.0

WATER LEVEL: DEPTH (FT): 3.5' TIME: 0-HR 26.0ft - END OF HOLE
DEPTH (FT): 3.7' TIME: 24-HR
DRILLING DATES: START: 2/03/05
FINISH: 2/03/05
DRILLER: BILL MINOR/PENNDRILL

SECTION B-B
SCALE: 1" = 5'

BORING: B-4
STATION: 103+84
OFFSET: 19' RIGHT
ELEV. 916.5

A	B	C	D	E	VISUAL DESCRIPTION
1.5	S-1	1-1-1		M	Brown to dk. brown, moist to wet, very soft to loose, silty SAND to sandy SILT with gravel and trace organics (roots)
3.0	S-2	1-1-2		W	
4.5	S-3	2-3-4		M	
5.7	S-4	2-9-50/.2		M	EL.911.0
7.5	R-1	100(46)		--	Gray to brown, moist, sandy CLAY with gravel (decomposed claystone) EL.910.8
9.0	R-2	100(100)		--	
14.0	R-3	100(86)		--	CLAYSTONE, gray, soft, (HCSI=2), completely weathered, bedding not discernible, closely spaced fractures RD = 0° EL.902.1
					COAL EL.901.3
19.0	R-4	100(30)		--	LIMESTONE, gray to dk.gray, (carbonaceous) with trace pyrite, hard(HCSI=4), moderately weathered, bedding not discernible, extremely close to closely spaced fractures RD = 0-90°
24.0	R-5	66(34)		--	90° rough joint @ 16 ft. HCSI = 0 at 20 to 22 ft and 24 to 26 ft.
26.0	R-6	100(40)		--	EL.890.5

0 HR 2/02/05
B.F.E. 909.0

WATER LEVEL: DEPTH (FT): 1.9' TIME: 0-HR 26.0ft - END OF HOLE
DRILLING DATES: START: 2/02/05
FINISH: 2/02/05
DRILLER: BILL MINOR/PENNDRILL

BORING: B-5
STATION: 103+62
OFFSET: 12' RIGHT
ELEV. 914.0

A	B	C	D	E	VISUAL DESCRIPTION
1.5	S-1	3-5-17		W	Brown, wet, medium dense SAND and rounded GRAVEL EL.913.0
3.0	S-2	8-17-23		9.4	Gray, moist to wet, hard to very hard, gravelly lean CLAY with sand EL.910.0
3.7	S-3	47-50/.1		8.2	
6.5	R-1	100(72)			CLAYSTONE, gray, extremely soft to soft, (HCSI=0-2), residual to highly weathered, bedding not discernible, extremely close to medium spaced fractures soft seam from 3.6 to 4.0 ft. and from 6.5 to 6.6 ft. EL. 902.8
					COAL EL. 902.5
11.5	R-2	52(0)			
16.5	R-3	86(34)			LIMESTONE, gray to dk gray, hard, (HCSI=4), moderately weathered, extremely close to medium spaced fractures 90° fracture @ 17.5 ft. EL.896.0
					CLAYSTONE,gray,soft,comp.weathered EL.895.3
21.5	R-4	76(56)			LIMESTONE,gray,hard,(HCSI=4) moderately weathered, ext. close to closely spaced fractures soft seam @ 19.7 & from 21.5 to 21.8ft. EL.890.6
24.0	R-5	96(64)			CLAYSTONE,gray,soft,comp.weathered EL.890.0

ELEVATION (FT.): 920, 910, 900, 890

WATER LEVEL: DEPTH (FT): IN STREAM 24.0ft - END OF HOLE
DRILLING DATES: START: 2/03/05
FINISH: 2/03/05
DRILLER: JIM SACCANI/PENNDRILL

LEGEND OF SYMBOLS

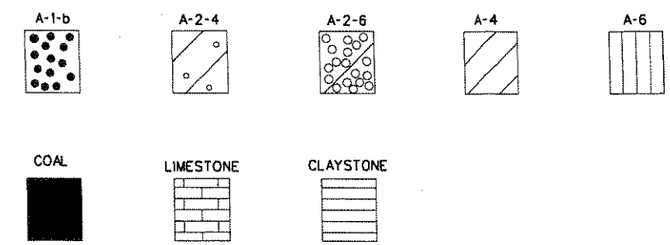

LEGEND

COLUMN A- LOWER LIMIT OF SAMPLES AND CORE RUNS
COLUMN B- SAMPLE AND CORE RUN IDENTIFICATION NUMBERS
COLUMN C- SAMPLE BLOWS PER 0.5 FT. WHERE ROCK IS ENCOUNTERED. THE PERCENT CORE RECOVERY IS SHOWN AND THE ROCK QUALITY DESIGNATION (RQD) IS SHOWN IN PARENTHESIS.
COLUMN D- SOIL / ROCK SYMBOLS: CLASSIFICATION AS DETERMINED BY INSPECTOR IN THE FIELD.
COLUMN E- SAMPLE MOISTURE CONTENT (D=DRY, M=MOIST, W=WET, OR MOISTURE CONTENT BASED ON LABORATORY TEST RESULT.)

HAMMER DROP ON SPOON SAMPLER = 30 IN.
HAMMER WEIGHT = 140 LBS.
SIZE OF SAMPLER = 2 IN. O.D.
SIZE OF CORE BIT = NQ

▽ = GROUND WATER ELEVATION AT TIME INDICATED

B.F.E. = BOTTOM OF FOOTING ELEVATION

HCSI = REFERS TO THE HARDNESS AND COMPRESSIVE STRENGTH INDEX. VALUES WERE DETERMINED IN THE FIELD AND ARE BASED ON THE WEST VIRGINIA GUIDELINES.

RD = RELATIVE DIP. MEASURED PERPENDICULAR TO THE CORE AXIS.

GENERAL NOTES

1. BORINGS DRILLED BY PENNSYLVANIA DRILLING COMPANY (PENNDRILL) FEBRUARY 2005.
2. THE BORING LOGS AND RELATED INFORMATION DEPICT SUBSURFACE CONDITIONS ONLY AT THE SPECIFIC LOCATIONS AND DATES INDICATED. SUBSURFACE CONDITIONS AND WATER LEVELS AT OTHER LOCATIONS MAY DIFFER FROM THE CONDITIONS REPORTED AT THE SPECIFIC LOCATIONS. ALSO THE PASSAGE OF TIME MAY RESULT IN A CHANGE IN THE CONDITIONS AT ANY BORING LOCATION.

NO.	REVISION	DATE:	BY:

W. V. DEPARTMENT OF TRANSPORTATION
DIVISION OF HIGHWAYS - ENGINEERING DIVISION

SCOTT SLAB BRIDGE REPLACEMENT
BRIDGE NO. 10570

CORE BORINGS - 2

DESIGNED	DATE
JFD	2/05
DRAWN JFD	2/05
CHECKED WGK	3/05
CHECKED -	-

URS

SHEET B27 OF B28
BRIDGE NO. 10570

P:\WVDOH SCOTT SLAB BRIDGE\CADD\Structure\PLANSVP S & E Feb 15 2006\S9B345G.dgn 8/14/2007 2:29:47 PM
J08229C98 - BRIDGE b

PROJECT NUMBERS		DISTRICT	COUNTY	SHEET NO.	TOTAL SHTS.
STATE	FEDERAL				
S317-12-0.89 00	BR-0012(042)E	4	HARRISON	64	93

GIRDER 1

SPAN	SECTION LOCATIONS	TOP FLG WIDTH (IN)	TOP FLG THICKNESS (IN)	TOP FLG YEILD STRENGTH (KSI)	BOTTOM FLG WIDTH (IN)	BOTTOM FLG THICKNESS (IN)	BOTTOM FLG YIELD STRENGTH (KSI)	WEB DEPTH (IN)	WEB THICKNESS (IN)	WEB YIELD STRENGTH (KSI)	NON-COMPOSITE (GIRDER ONLY) S-TOP FLG (IN^3)	NON-COMPOSITE (GIRDER ONLY) S-BOTTOM FLG (IN^3)	3n COMPOSITE FOR POSITIVE MOMENT (GIRDER AND CONCRETE WITH 3n MODULAR RATIO) S-TOP FLG (IN^3)	3n COMPOSITE FOR POSITIVE MOMENT (GIRDER AND CONCRETE WITH 3n MODULAR RATIO) S-BOTTOM FLG (IN^3)	1n COMPOSITE FOR POSITIVE MOMENT (GIRDER AND CONCRETE WITH 1n MODULAR RATIO) S-TOP FLG (IN^3)	1n COMPOSITE FOR POSITIVE MOMENT (GIRDER AND CONCRETE WITH 1n MODULAR RATIO) S-BOTTOM FLG (IN^3)	DESIGN SERVICE MOMENT AND SHEAR DL1 MOMENT (K-FT)	DESIGN SERVICE MOMENT AND SHEAR DL1 SHEAR (K)	DESIGN SERVICE MOMENT AND SHEAR DL2 MOMENT (K-FT)	DESIGN SERVICE MOMENT AND SHEAR DL2 SHEAR (K)	LLDF MOMENT	LLDF SHEAR
1	A	12	0.75	70	12	1.375	70	14	0.4375	70											0.7875	0.7875
1	B	12	0.75	70	12	1.375	70	14	0.4375	70											0.7875	0.7875
1	C	12	0.75	70	12	1.375	70	14	0.4375	70											0.7875	0.7875

GIRDERS 2 THRU 4

SPAN	SECTION LOCATIONS	TOP FLG WIDTH (IN)	TOP FLG THICKNESS (IN)	TOP FLG YEILD STRENGTH (KSI)	BOTTOM FLG WIDTH (IN)	BOTTOM FLG THICKNESS (IN)	BOTTOM FLG YIELD STRENGTH (KSI)	WEB DEPTH (IN)	WEB THICKNESS (IN)	WEB YIELD STRENGTH (KSI)	NON-COMPOSITE (GIRDER ONLY) S-TOP FLG (IN^3)	NON-COMPOSITE (GIRDER ONLY) S-BOTTOM FLG (IN^3)	3n COMPOSITE FOR POSITIVE MOMENT (GIRDER AND CONCRETE WITH 3n MODULAR RATIO) S-TOP FLG (IN^3)	3n COMPOSITE FOR POSITIVE MOMENT (GIRDER AND CONCRETE WITH 3n MODULAR RATIO) S-BOTTOM FLG (IN^3)	1n COMPOSITE FOR POSITIVE MOMENT (GIRDER AND CONCRETE WITH 1n MODULAR RATIO) S-TOP FLG (IN^3)	1n COMPOSITE FOR POSITIVE MOMENT (GIRDER AND CONCRETE WITH 1n MODULAR RATIO) S-BOTTOM FLG (IN^3)	DESIGN SERVICE MOMENT AND SHEAR DL1 MOMENT (K-FT)	DESIGN SERVICE MOMENT AND SHEAR DL1 SHEAR (K)	DESIGN SERVICE MOMENT AND SHEAR DL2 MOMENT (K-FT)	DESIGN SERVICE MOMENT AND SHEAR DL2 SHEAR (K)	LLDF MOMENT	LLDF SHEAR
1	A	12	0.75	70	12	1.375	70	14	0.4375	70											0.6380	0.8144
1	B	12	0.75	70	12	1.375	70	14	0.4375	70											0.6380	0.8144
1	C	12	0.75	70	12	1.375	70	14	0.4375	70											0.6380	0.8144

GIRDER 5

SPAN	SECTION LOCATIONS	TOP FLG WIDTH (IN)	TOP FLG THICKNESS (IN)	TOP FLG YEILD STRENGTH (KSI)	BOTTOM FLG WIDTH (IN)	BOTTOM FLG THICKNESS (IN)	BOTTOM FLG YIELD STRENGTH (KSI)	WEB DEPTH (IN)	WEB THICKNESS (IN)	WEB YIELD STRENGTH (KSI)	NON-COMPOSITE (GIRDER ONLY) S-TOP FLG (IN^3)	NON-COMPOSITE (GIRDER ONLY) S-BOTTOM FLG (IN^3)	3n COMPOSITE FOR POSITIVE MOMENT (GIRDER AND CONCRETE WITH 3n MODULAR RATIO) S-TOP FLG (IN^3)	3n COMPOSITE FOR POSITIVE MOMENT (GIRDER AND CONCRETE WITH 3n MODULAR RATIO) S-BOTTOM FLG (IN^3)	1n COMPOSITE FOR POSITIVE MOMENT (GIRDER AND CONCRETE WITH 1n MODULAR RATIO) S-TOP FLG (IN^3)	1n COMPOSITE FOR POSITIVE MOMENT (GIRDER AND CONCRETE WITH 1n MODULAR RATIO) S-BOTTOM FLG (IN^3)	DESIGN SERVICE MOMENT AND SHEAR DL1 MOMENT (K-FT)	DESIGN SERVICE MOMENT AND SHEAR DL1 SHEAR (K)	DESIGN SERVICE MOMENT AND SHEAR DL2 MOMENT (K-FT)	DESIGN SERVICE MOMENT AND SHEAR DL2 SHEAR (K)	LLDF (SEE NOTE 4) MOMENT	LLDF (SEE NOTE 4) SHEAR
1	A	12	0.75	70	12	1.375	70	14	0.4375	70											0.75	0.75
1	B	12	0.75	70	12	1.375	70	14	0.4375	70											0.75	0.75
1	C	12	0.75	70	12	1.375	70	14	0.4375	70											0.75	0.75

GIRDER 6

SPAN	SECTION LOCATIONS	TOP FLG WIDTH (IN)	TOP FLG THICKNESS (IN)	TOP FLG YEILD STRENGTH (KSI)	BOTTOM FLG WIDTH (IN)	BOTTOM FLG THICKNESS (IN)	BOTTOM FLG YIELD STRENGTH (KSI)	WEB DEPTH (IN)	WEB THICKNESS (IN)	WEB YIELD STRENGTH (KSI)	NON-COMPOSITE (GIRDER ONLY) S-TOP FLG (IN^3)	NON-COMPOSITE (GIRDER ONLY) S-BOTTOM FLG (IN^3)	3n COMPOSITE FOR POSITIVE MOMENT (GIRDER AND CONCRETE WITH 3n MODULAR RATIO) S-TOP FLG (IN^3)	3n COMPOSITE FOR POSITIVE MOMENT (GIRDER AND CONCRETE WITH 3n MODULAR RATIO) S-BOTTOM FLG (IN^3)	1n COMPOSITE FOR POSITIVE MOMENT (GIRDER AND CONCRETE WITH 1n MODULAR RATIO) S-TOP FLG (IN^3)	1n COMPOSITE FOR POSITIVE MOMENT (GIRDER AND CONCRETE WITH 1n MODULAR RATIO) S-BOTTOM FLG (IN^3)	DESIGN SERVICE MOMENT AND SHEAR DL1 MOMENT (K-FT)	DESIGN SERVICE MOMENT AND SHEAR DL1 SHEAR (K)	DESIGN SERVICE MOMENT AND SHEAR DL2 MOMENT (K-FT)	DESIGN SERVICE MOMENT AND SHEAR DL2 SHEAR (K)	LLDF MOMENT	LLDF SHEAR
1	A	12	0.75	70	12	0.75	70	14	0.4375	70											0.8211	0.8211
1	B	12	0.75	70	12	0.75	70	14	0.4375	70											0.8211	0.8211
1	C	12	0.75	70	12	0.75	70	14	0.4375	70											0.8211	0.8211

NOTES:

1. DL1 MOMENT AND SHEAR IS DUE TO WEIGHT OF STEEL GIRDERS, DIAPHRAGMS AND DETAILS, STRUCTURAL DECK CONCRETE, HAUNCHES AND STAY-IN-PLACE FORMS. THESE FORCE EFFECTS ARE RESISTED BY THE NON-COMPOSITE GIRDER.
2. DL2 MOMENT AND SHEAR IS DUE TO WEIGHT OF BARRIERS AND FUTURE WEARING SURFACE. THESE FORCE EFFECTS ARE RESISTED BY THE COMPOSITE GIRDER.
3. LL+ 1 MOMENTS AND SHEARS PROVIDED ARE CRITICAL (MAXIMUM) FORCES AT THE SPECIFIC LOCATION INDICATED.
4. LLDF FOR GIRDER 5 DOES NOT INCLUDE ADDITIONAL UNFACTORED CONCENTRATED LL + I OF 25.1K AT MIDSPAN FROM GIRDER 6 REACTION.

LOAD RATING FACTOR				
RATING	H20	HS20	3S2	TYPE 3
INVENTORY (IRF)				
OPERATING (ORF)				

LOAD RATING (TONS)				
RATING	H20	HS20	3S2	TYPE 3
INVENTORY (IR)				
OPERATING (OR)				

DESIGN MOMENTS AND SHEARS (LL+I HAVE A LLDF = 1.0)

SPAN	SECTION LOCATIONS	H20 TRUCK LL+I MOMENT (K-FT)	H20 TRUCK LL+I SHEAR (K)	HS20 TRUCK/LANE LL+I MOMENT (K-FT)	HS20 TRUCK/LANE LL+I SHEAR (K)	3S2 TRUCK LL+I MOMENT (K-FT)	3S2 TRUCK LL+I SHEAR (K)	TYPE 3 TRUCK LL+I MOMENT (K-FT)	TYPE 3 TRUCK LL+I SHEAR (K)

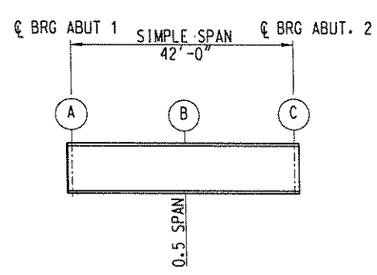

GIRDERS 1 THRU 5

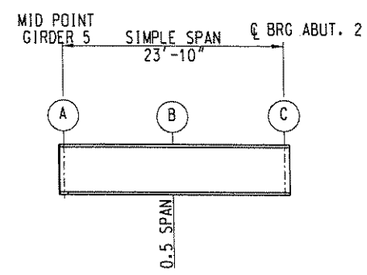

GIRDER 6

NO.	REVISION	DATE:	BY:

W. V. DEPARTMENT OF TRANSPORTATION
DIVISION OF HIGHWAYS - ENGINEERING DIVISION

SCOTT SLAB BRIDGE REPLACEMENT
BRIDGE NO. 10570
LOAD RATING

DESIGNED	DATE
WJW	07-05
DRAWN WJW/JFD	07-05
CHECKED JML	07-05
CHECKED JML	07-05

URS

SHEET B28 OF B28
BRIDGE NO. 10570

P:\WVDOH SCOTT SLAB BRIDGE\CADD\Structure\PLANS\P S & E Feb 15 2006\str_lrg_scottslbl.dgn 8/14/2007 2:14:38 PM
J06C29C98 - BRIDGE B

Public Roads Div.	State Dist. No.	State Project No.	Federal Project No.	Fiscal Year	County	Sheet No.	Total Sheets
W.V.	04	S317 -12- 0.89 00	BR-0012 (042)E	2006	HARRISON	65	93

SUMMARY OF QUANTITIES

ITEM NO.	DESCRIPTION	QUANTITY	
		UNIT	TOTAL
639001-001	CONSTRUCTION LAYOUT STAKE	LS	1
670004-221	8 INCH DUCTILE IRON PIPE, TYPE 1, CLASS 50	LF	89
670007-020	6 INCH PLASTIC PIPE, CLASS 200	LF	404
670007-022	8 INCH PLASTIC PIPE, CLASS 200	LF	278
670009-200	6 INCH GATE VALVE AND VALVE BOX	EA	1
670009-220	8 INCH GATE VALVE AND VALVE BOX	EA	1
670010-180	4 INCH STEEL CASING PIPE, THICKNESS 0.1875"	LF	70
670010-260	12 INCH STEEL CASING PIPE, THICKNESS 0.1875"	LF	62
670013-220	8 INCH FIRE HYDRANT	EA	1
670016-001	RELOCATE METER	EA	2
670019-001	2 INCH SPECIAL VALVE, AIR RELEASE ASSEMBLY	EA	2
670019-120	2 INCH SPECIAL VALVE, BLOWOFF ASSEMBLY	EA	2
670021-060	1 INCH HOUSE CONNECTION	LF	100

NOTES

1. SEQUENCE OF CONSTRUCTION:
   ALL WATER LINE RELOCATIONS SHALL BE INSTALLED PRIOR TO ROADWAY CONSTRUCTION.

2. THE CONTRACTOR SHALL PLUG OR CAP EACH END OF ALL WATERLINES WHICH ARE TO BE ABANDONED AS NOTED IN THE PLANS AND AS DETAILED. COST OF PLUGGING OR CAPPING EXISTING LINES SHALL BE INCIDENTAL TO THE PAY ITEMS FOR THE VARIOUS PIPES INSTALLED.

3. BEFORE STARTING THE CONSTRUCTION OF ALL WATERLINE RELOCATIONS AND ALL SERVICE LATERALS TO BE CONNECTED TO THE PARTICULAR RELOCATION, THE CONTRACTOR SHALL:

   - WHERE THE PARTICULAR RELOCATION BEGINS AND ENDS, EXPLORE AND FULLY EXPOSE THE EXISTING WATERLINE;
   - FULLY EXPOSE THE SERVICE LATERALS WHERE CONNECTIONS TO THE NEW SERVICE LATERAL ARE TO BE MADE;
   - DETERMINE THE SIZE, ELEVATION, AND TYPE OF PIPE AT THE PLACE OF CONNECTION; AND
   - DETERMINE IF THE PARTICULAR RELOCATION CAN BE CONSTRUCTED AS DETAILED IN THE PLANS AND NOTIFY THE PROJECT ENGINEER OF THE FINDINGS.

   IF THE PARTICULAR LINE CANNOT BE CONSTRUCTED IN ACCORDANCE WITH THE CONTRACT PLANS, ADJUSTMENTS TO THE PLANS WILL BE MADE AS DIRECTED BY THE PROJECT ENGINEER AND , WHEN NECESSARY, ADJUSTMENTS TO THE CONTRACT WILL BE MADE IN ACCORDANCE WITH SECTION 104.

4. SEE THE ROADWAY SECTION OF THE PLANS FOR THE SPECIAL DETAILS FOR REPAVING OVER ANY PIPE TRENCH. ALL COST OF PAVEMENT RESTORATION SHALL BE INCIDENTAL TO THE PAY ITEM FOR THE PIPE INSTALLED.

5. ALL WATERLINES SHALL HAVE A MINIMUM COVER OF 36 INCHES.

6. ALL COSTS FOR CONSTRUCTING METER SETTINGS SHALL BE INCIDENTAL TO THE COST OF THE RELOCATED METER.

7. THE INDIVIDUAL WATERLINES SHALL BE SUBJECTED TO A HYDROSTATIC TEST WITH THE PRESSURE AS INDICATED ABOVE THE TITLE BLOCKS ON RESPECTIVE PLAN SHEETS. COST OF TESTING SHALL BE INCIDENTAL TO THE COST OF THE PIPE.

8. ALL WATERLINE RELOCATION WORK SHALL BE STAGED TO MINIMIZE THE TIME THAT CUSTOMERS ARE OUT OF SERVICE. IN NO CASE SHALL THE TIME EXCEED FOUR (4) HOURS. A HIGH EARLY STRENGTH ADMIXTURE TO CONCRETE FOR THRUST BLOCKS SHALL BE USED. CONNECTION SHALL BE MADE BETWEEN THE HOURS OF 6:00 P.M. AND 6:00 A.M. THE CONTRACTOR SHALL COORDINATE WATER TIE-INS TO EXISTING LINES WITH THE PRIMARY CONTACTS LISTED BELOW.

   WATER: CITY OF SHINNSTON, DARWIN WATSON, (304) 592-0092.

9. THE INFORMATION SHOWN ON THIS DRAWING CONCERNING TYPE, SIZE AND LOCATION OF UNDERGROUND UTILITIES IS NOT GUARANTEED TO BE ACCURATE OR ALL INCLUSIVE. THE CONTRACTOR IS RESPONSIBLE FOR MAKING HIS OWN DETERMINATIONS AS TO THE TYPE, SIZE AND LOCATION OF UNDERGROUND UTILITIES AS MAY BE NECESSARY TO AVOID DAMAGE THERETO.

10. ALL P.V.C. WATERLINE PIPE 4" DIAMETER OR LARGER INSTALLED ON THIS PROJECT SHALL BE PUSH-ON JOINT CLASS 200, DR-14, P.V.C. PIPE MEETING THE REQUIREMENTS OF AWWA C-900, "STANDARD FOR POLYVINYL CHLORIDE PRESSURE PIPE 4 INCH THROUGH 12 INCH, FOR WATER". PVC WATERLINE PIPE LESS THAN 4 INCH DIAMETER SHALL BE SDR 21, CLASS 200 PSI, MEETING THE REQUIREMENTS OF ASTM 2241 AND D1784.

11. SERVICE TUBING FOR HOUSE CONNECTIONS TO THE CITY OF SHINNSTON. SYSTEM SHALL BE POLYETHYLENE (PE) TUBING, COPPER TUBING SIZE, GRADE PE 3408 CONFORMING TO ASTM D2239, SDR 7 AND RATED FOR 200 PSI MIN. WORKING PRESSURE.

12. ALL FITTINGS INSTALLED ON WATERLINES 4" DIAMETER OR LARGER SHALL BE MECHANICAL JOINT DUCTILE IRON, CONFORMING TO ANSI/AWWA C110/A21.10 OR COATED PER ANSI/AWWA C104/A21.4. BOLTS AND NUTS TO BE EITHER DUCTILE IRON OR STAINLESS STEEL COST OF FITTINGS SHALL BE INCIDENTAL TO THE PAY ITEM FOR THE PIPE INSTALLED.

13. EXISTING WATER METERS, METER VAULTS AND LIDS WHICH CURRENTLY SERVE HOMES, UNLESS DESIGNATED IN THE PLANS TO BE REPLACED, SHALL BE REMOVED BY THE CONTRACTOR AND DELIVERED TO THE CITY OF SHINNSTON WATER WORKS. COST OF REMOVING METER, METER VAULTS, LIDS AND FIRE HYDRANTS THAT ARE NOT REUSED SHALL BE INCIDENTAL TO THE VARIOUS WATERLINE RELOCATION BID ITEMS.

14. THE CONTRACTOR SHALL BE REQUIRED TO PROVIDE AND INSTALL 14 AWG SOLID COPPER TRACER WIRE WITH ALL WATERLINES. THE CONTRACTOR SHALL ALSO INSTALL 3" POLYETHYLENE BLUE MARKING TAPE EMBOSSED "CAUTION WATERLINE BURIED BELOW". THIS TAPE SHALL BE INSTALLED APPROXIMATELY 12" TO 18" BELOW FINISHED GRADE. THE COST OF TRACER WIRE AND TAPE SHALL BE INCIDENTAL TO THE PAY ITEMS FOR THE PIPE INSTALLED.

15. WATERLINE THRUST BLOCKS SHALL BE PROVIDED AS SHOWN ON THE DETAILS HEREIN. THE COST OF THIS SHALL BE INCIDENTAL TO THE PAY ITEMS FOR THE PIPE INSTALLED.

16. ALL GATE VALVES SHALL BE RESILIENT SEAT TYPE AND COMPLY WITH ASSA C509. VALVE SHALL HAVE IRON BODY, WITH CAST IRON WEDGE WITH RUBBER SEAT PERMANENTLY BONDED TO AND ENCASING THE WEDGE. THE BONDING PROCESS SHALL MEET THE TEST REQUIREMENTS OF ASTM D249. THE RUBBER SEAT SHALL BE RESILIENT, NICK FREE, ABRASIVE RESISTANT POLYURETHANE, SBR OR BUNA-N RUBBER. ALL VALVES TO BE OF THE NON-RISING STEM TYPE, COUNTER CLOCKWISE TO OPEN AND SHALL BE FITTED WITH MECHANICAL JOINT ENDS. 3 INCH OR SMALLER SHALL BE PUSH ON JOINTS.

17. VALVE BOXES SHALL BE STANDARD, ADJUSTABLE, HEAVY PATTERN, CAST IRON EXTENSION TYPE, THREE PIECE, 5¼" SHAFT, SCREW TYPE, AND OF SUCH LENGTH AS NECESSARY TO EXTEND FROM VALVE TO 18" BELOW FINISHED GRADE. VALVE BOX COVER SHALL BE MARKED "WATER".

18. FIRE HYDRANTS SHALL BE PER AWWA SPECIFICATIONS C502, FIRE HYDRANTS SHALL BE M & H VALVE COMPANY STYLE 129T TRAFFIC HYDRANT EQUIPPED WITH A 6" MECHANICAL JOINT INLET CONNECTION, A 5½" MAIN VALVE OPENING, TWO 2" HOSE NOZZLES, AND ONE 4" STREAMER NOZZLE. ALL OUTLET THREADS SHALL BE NATIONAL STANDARD FIRE HOSE COUPLING SCREW THREADS.

19. THE ENDS OF THE STEEL CASING PIPE SHALL BE SEALED TO PREVENT THE ENTRY OF BACKFILL BY USING MODEL "C" CUSTOM PULL-ON END SEALS MADE OF ⅛" THICK SYNTHETIC RUBBER AS MANUFACTURED BY PIPELINE SEAL AND INSULATOR, INC., HOUSTON, TEXAS OR APPROVED EQUAL. COST OF SEALING THE ENDS OF CASINGS SHALL BE INCIDENTAL TO THE COST OF THE CASING PIPE INSTALLED.

DWG. NO. W-1

PREPARED BY
URS
CHARLESTON, WV

REVISION NUMBER	SHEET NUMBER	REVISION	DATE	BY

THE WEST VIRGINIA DEPARTMENT OF TRANSPORTATION
DIVISION OF HIGHWAYS
WATER LINE RELOCATION
SUMMARY OF QUANTITIES
& GENERAL NOTES

P:\WVDOH SCOTT SLAB BRIDGE\CADD\Structure\PLANS\8-15-07\65 of 93\rdg_reloc_gms_scottslab17.06.2005i.dgn8/16/2007 1:39:27 PM
J06C29C98-PLAN 1

Public Roads Div.	State Dist. No.	State Project No.	Federal Project No.	Fiscal Year	County	Sheet No.	Total Sheets
W.V.	04	S317 -12- 0.89 00	BR-0012 (042)E	2006	HARRISON	66	93

CURVE ①

PI = 99+09.08
Δ = 34°55'55" LT.
D = 19°05'55"
R = 300.00'
L = 182.90'
T = 94.39'

CURVE ②

PI = 101+05.67
Δ = 6°00'00" LT.
D = 19°05'55"
R = 300.00'
L = 31.42'
T = 15.72'
SE = 4.00%
V = 30 MPH

CURVE ③

PI = 102+87.58
Δ = 18°34'53" RT.
D = 19°05'55"
R = 300.00'
L = 97.29'
T = 49.08'
SE = 4.00%
V = 30 MPH

CURVE ④

PI = 103+93.17
Δ = 70°25'53" RT.
D = 70°28'59"
R = 81.29'
L = 99.93'
T = 57.38'
SE = 4.00%
V = 15 MPH

CURVE ⑤

PI = 200+59.41
Δ = 41°22'28" LT.
D = 76°23'40"
R = 75.00'
L = 54.16
T = 28.32'
SE = 4.00%
V = 15 MPH

CURVE ⑥

PI = 10+98.66
Δ = 16°44'12" RT.
D = 12°03'44"
R = 475.00'
L = 138.75'
T = 69.87'
SE = NC
V = N/A

CURVE ⑦

PI = 106+05.78
Δ = 19°03'30" RT.
D = 11°27'33"
R = 500.00'
L = 166.32'
T = 83.93'
SE = MATCH EXISTING
V = N/A

STA. 10+91
CONNECT TO EXISTING
6" WATER LINE
SEE DETAIL W-1-1
N 26599.1218
E 747026.6971

STA. 99+96.16
COUNTY ROUTE 12
BEGIN PROJECT
MATCH EXISTING

STA. 11+24
SEE DETAIL W-1-2

STA. 11+70
INSTALL 8" FIRE HYDRANT

STA. 201+57
COUNTY ROUTE 19/28
END WORK
MATCH EXISTING

W-1 STA. 14+57
=W-2 STA. 24+20
8" X 6" TEE
SEE DETAIL W-1-3
N 26770.9675
E 747329.7331

STA. 14+20
45° HORZ. BEND
W/THRUST BLOCK
N 26740.2956
E 747310.5435

STA. 13+79
45° HORZ. BEND
W/THRUST BLOCK
N 26732.7102
E 747270.2514

8" PVC WATER LINE
TO BE INSTALLED
IN 2005 BY OTHERS
TO BE ABANDONED
THIS PROJECT

STA. 13+11
45° HORZ. BEND
W/THRUST BLOCK
N 26676.5610
E 747231.8939

STA. 12+60
11 1/4° HORZ. BEND
W/THRUST BLOCK
N 26667.1278
E 747181.7856

8" PVC
W-1 RELOCATION

STA. 23+88
6" TEE W/THRUST
BLOCK & REDUCER
SEE DETAIL W-2-1

32 LF of
12" CASING
T=0.1875"

(SEE NOTE 1)

6" PVC
W-2 RELOCATION

REMOVE WM

70 LF
4" STEEL CASING
T=0.1875"

RELOCATED WM'S
CONNECT TO EXISTING
SERVICE LINES
100 LF of 1" PVC

RELOCATE WM'S

30 LF of
12" STEEL CASING
T=0.1875"

STA. 20+16
90° HORZ. BEND
CONNECT TO EXISTING
6" WATER LINE
SEE DETAIL W-2-2

STA. 29+51
6" - 90° HORZ. BEND
W/THRUST BLOCK

STA. 106+00.00
COUNTY ROUTE 12
END PROJECT
MATCH EXISTING

WATERLINE OPERATING PRESSURE = 110 PSI
(TEST PRESSURE = 165 PSI)

TBM 1
RAILROAD SPIKE IN
UTILITY POLE UR106
ELEV. 925.18

TBM 2
RAILROAD SPIKE IN
UTILITY POLE 62/43
ELEV. 921.10

NOTE 1: BUILDINGS HAVE BEEN DEMOLISHED BY OTHERS UNDER SEPARATE CONTRACT.

DENOTES SCARIFY AND MULCH.
GRADE TO DRAIN.

SCALE : 0 20 ft.

PREPARED BY
URS
CHARLESTON, WV

REVISION NUMBER	SHEET NUMBER	REVISION	DATE	BY

THE WEST VIRGINIA DEPARTMENT OF TRANSPORTATION
DIVISION OF HIGHWAYS

WATER LINE RELOCATION PLAN

DWG. NO. W-2

P:\WVDOH SCOTT SLAB BRIDGE\CADD\Structure\PLANS\8-15-07\NGS of 93\r-dp-reloc.pln.scottslab.dgn
8/17/2007 11:17 PM

Public Roads Div.	State Dist. No.	State Project No.	Federal Project No.	Fiscal Year	Station To Station	Sheet No.	Total Sheets
W.V.	04	S317 -12- 0.89 00	BR-0012 (042)E	2006	10+00 to 14+57	67	93

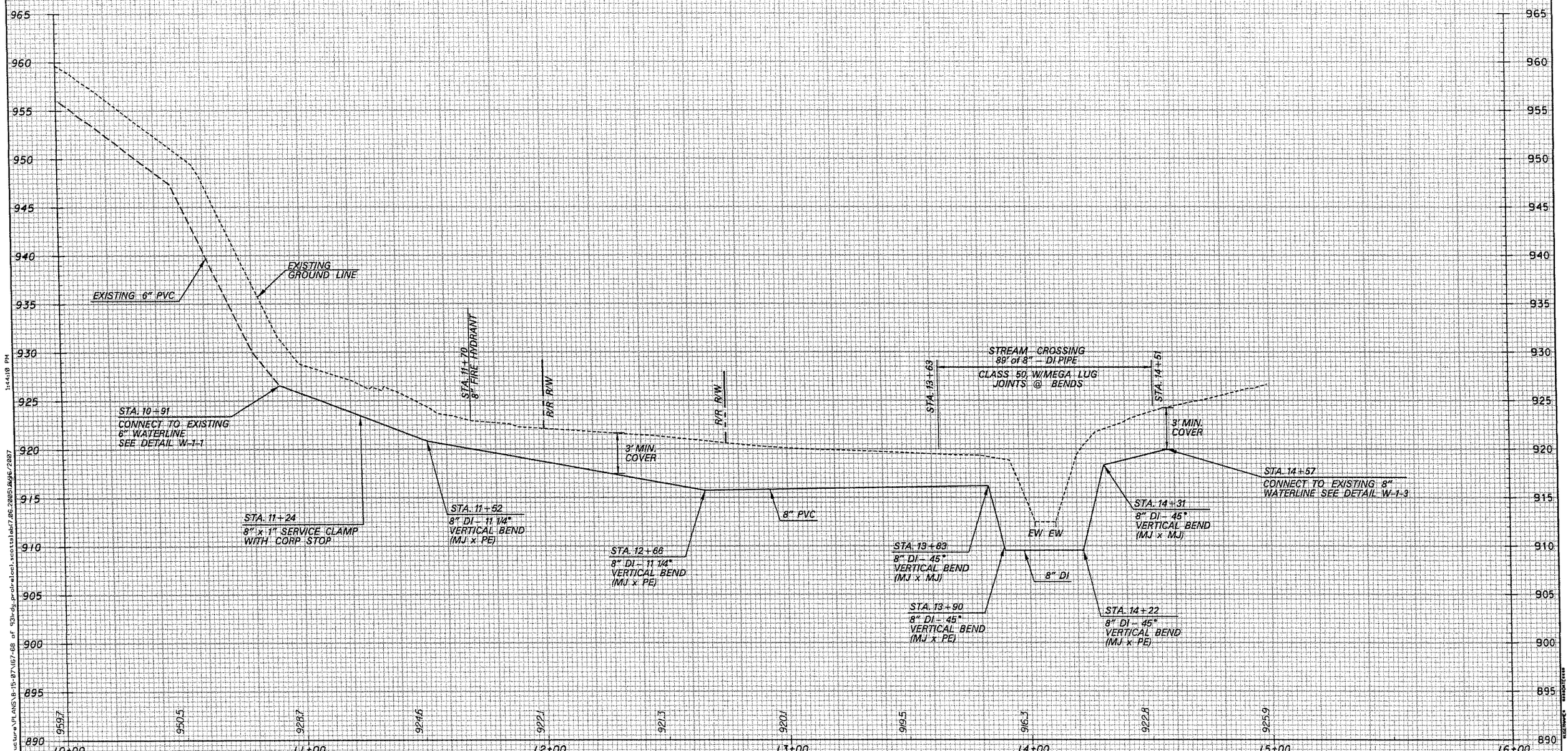

W-1 RELOCATION

SCALES
5 ft.
0 20 ft. 0

PREPARED BY
URS
CHARLESTON, WV

REVISION NUMBER	SHEET NUMBER	REVISION	DATE	BY

THE WEST VIRGINIA DEPARTMENT OF TRANSPORTATION
DIVISION OF HIGHWAYS

WATERLINE RELOCATION PROFILES

DWG. NO. W-3

P:\WVDOH SCOTT SLAB BRIDGE\CADD\Structure\PLANS\8-15-07\67-68 of 93-dg_profrelocl_scottslab17.06.2007\06/06/2007 1:44:10 PM

J06C29G98-XSECT2

Public Roads Div.	State Dist. No.	State Project No.	Federal Project No.	Fiscal Year	Station To Station	Sheet No.	Total Sheets
W.V.	04	S317 -12- 0.89 00	BR-0012 (042)E	2006	20+00 to 24+00	68	93

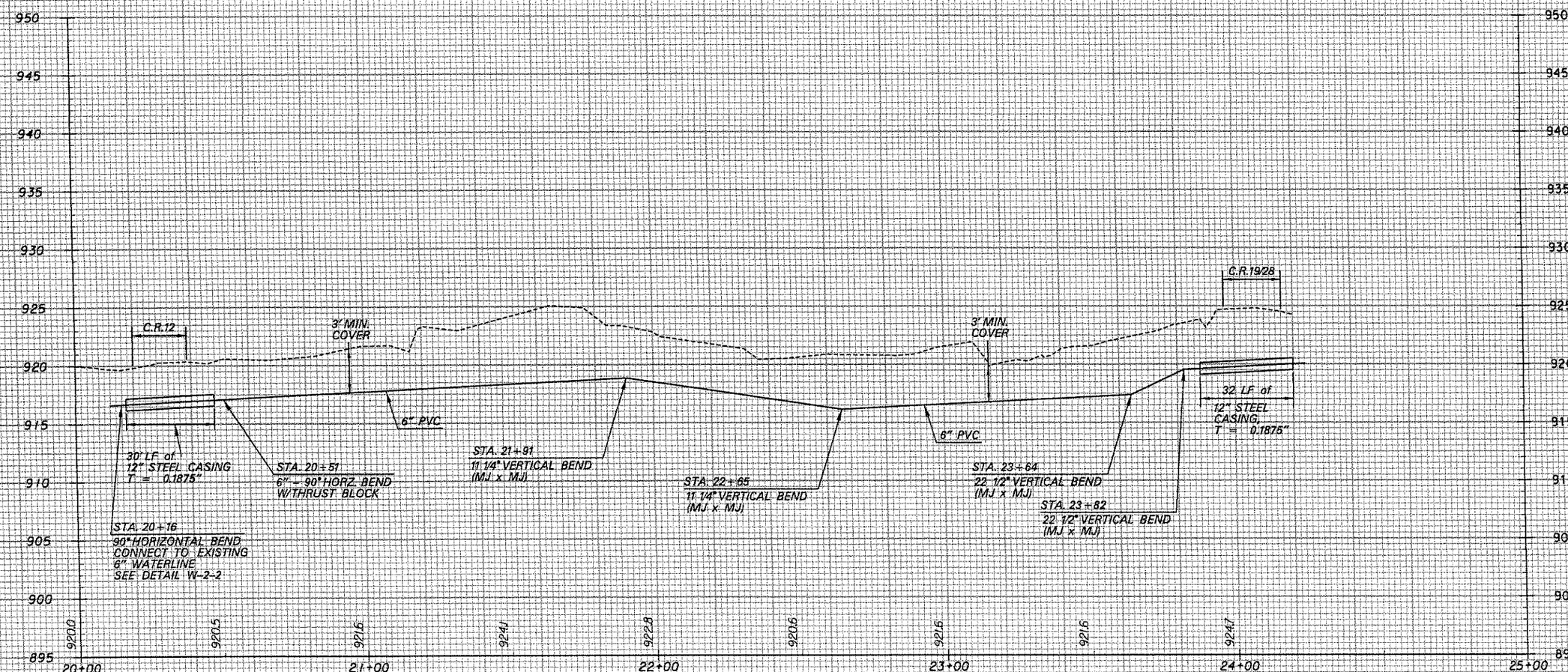

W-2 RELOCATION

SCALES 0 20 ft. 5 ft. 0

PREPARED BY URS CHARLESTON, WV

REVISION NUMBER	SHEET NUMBER	REVISION	DATE	BY

THE WEST VIRGINIA DEPARTMENT OF TRANSPORTATION
DIVISION OF HIGHWAYS

WATERLINE RELOCATION PROFILES

DWG. NO. W-4

P:\WVDOH SCOTT SLAB BRIDGE\CADD\Structure\PLANS\8-15-07\67-68 of 93\rdy_prof\reloc1_scottslab(7.06.2005)\Aug6/2007 1:44:33 PM

Public Roads Div.	State Dist. No.	State Project No.	Federal Project No.	Fiscal Year	County	Sheet No.	Total Sheets
W.V.	04	S317 -12- 0.89 00	BR-0012 (042)E	2006	HARRISON	69	93

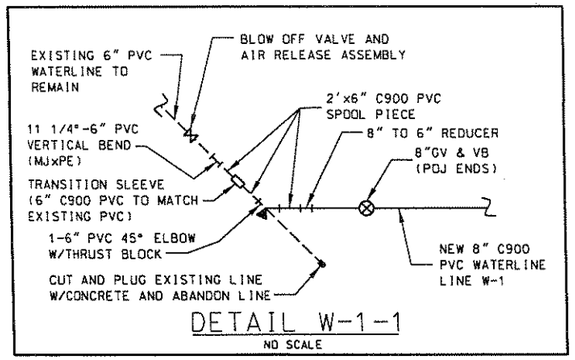

DETAIL W-1-1

NO SCALE

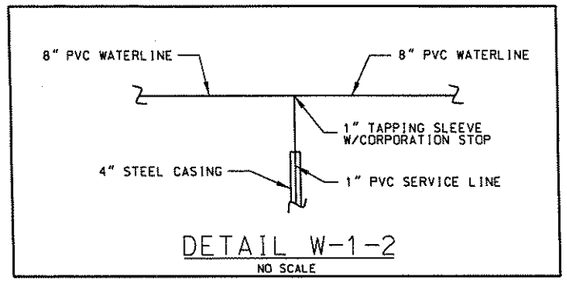

DETAIL W-1-2

NO SCALE

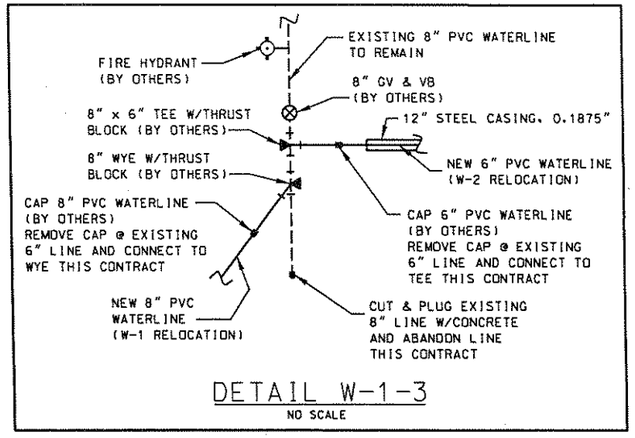

DETAIL W-1-3

NO SCALE

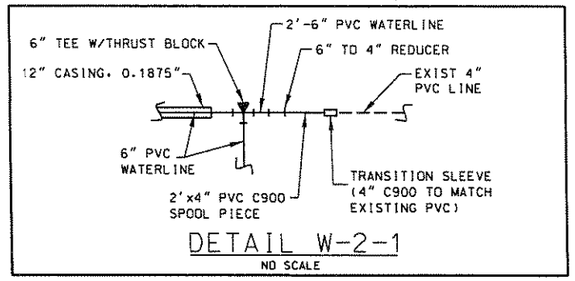

DETAIL W-2-1

NO SCALE

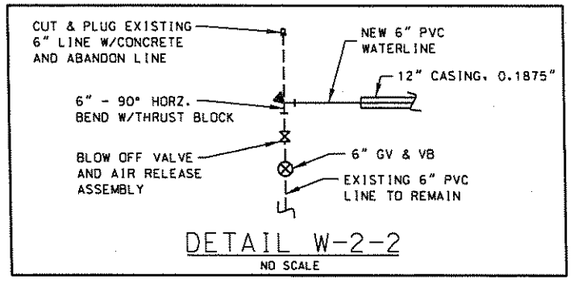

DETAIL W-2-2

NO SCALE

WATER LINE RELOCATION - BID ITEMS

LOCATION STATION	LOCATION STATION	670004-221 6 INCH DUCTILE IRON PIPE, TYPE I, CLASS 50	670007-020 6 INCH PLASTIC PIPE, CLASS 200	670007-022 8 INCH PLASTIC PIPE, CLASS 200	670009-200 6 INCH GATE AND VALVE, BOX	670009-220 8 INCH GATE VALVE AND VALVE BOX	670010-180 4 INCH STEEL CASING PIPE, THICKNESS 0.1875"	670010-260 12 INCH STEEL CASING PIPE, THICKNESS 0.1875"	670013-220 8 INCH FIRE HYDRANT	670016-001 RELOCATE METER	670019-001 2 INCH, SPECIAL VALVE, AIR RELEASE ASSEMBLY	670019-120 2 INCH SPECIAL VALVE BLOWOFF ASSEMBLY	670021-060 1 INCH HOUSE CONNECTION	REMARKS
		LF	LF	LF	EA	EA	LF	LF	EA	EA	EA	EA	LF	
10+91	14+57	89		278		1	70		1	2	1	1	100	W1 RELOCATION
20+16	24+20		404		1			62			1	1		W2 RELOCATION
TOTAL		89	404	278	1	1	70	62	1	2	2	2	100	

WATER LINE RELOCATION - NON BID ITEMS

LOCATION STATION	LOCATION STATION	NON - BID ITEMS (FOR INFORMATION ONLY) 8" PLASTIC PIPE (W-1 RELOCATION) 11 1/4° BEND	45° BEND	TRANSITION SLEEVE	1" TAPPING SLEEVE W/ CORP. STOP	8" TO 6" REDUCER	NON - BID ITEMS (FOR INFORMATION ONLY) 6" PLASTIC PIPE (W-2 RELOCATION) 6" TEE	6" TO 4" REDUCER	90° BEND	11 1/4° BEND	22 1/2° BEND	TRANSITION SLEEVE	NON - BID ITEMS (FOR INFORMATION ONLY) 8" DUCTILE IRON PIPE (W-1 RELOCATION) 45° BEND		REMARKS
10+91	14+57	4	3	1	1	1							6		W1 RELOCATION
20+16	24+20						1	1	2	2	2	1			W2 RELOCATION
TOTAL		4	3	1	1	1	1	1	2	2	2	1	6		

PREPARED BY

URS

CHARLESTON, WV

REVISION NUMBER	SHEET NUMBER	REVISION	DATE	BY

THE WEST VIRGINIA DEPARTMENT OF TRANSPORTATION
DIVISION OF HIGHWAYS

WATER LINE CONNECTION DETAILS

DWG. NO. W-5

P:\WVDOH SCOTT SLAB BRIDGE\CADD\Structure\PLANS\8-15-07\69 of 93\r-dg_reloc_dt02_scottslab07.06.2005\.dgn16/2007

1:45:37 PM

Public Roads Div.	State Dist. No.	State Project No.	Federal Project No.	Fiscal Year	County	Sheet No.	Total Sheets
W.V.	04	S317 -12- 0.89 00	BR-0012 (042)E	2006	HARRISON	70	93

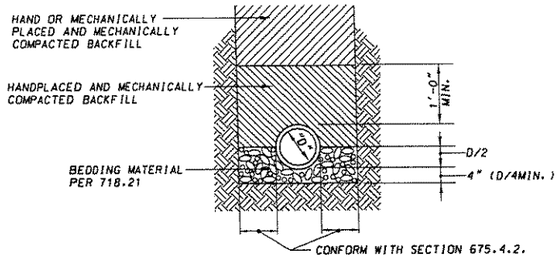

TRENCH BEDDING DETAIL
NO SCALE

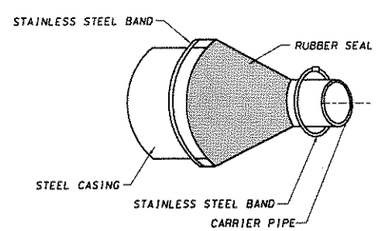

END SEAL FOR CASINGS
NO SCALE

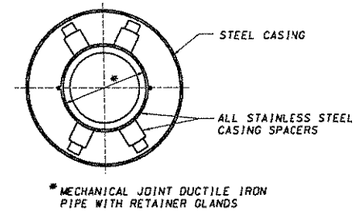

TYPICAL SECTION STEEL CASING SPACERS
NO SCALE

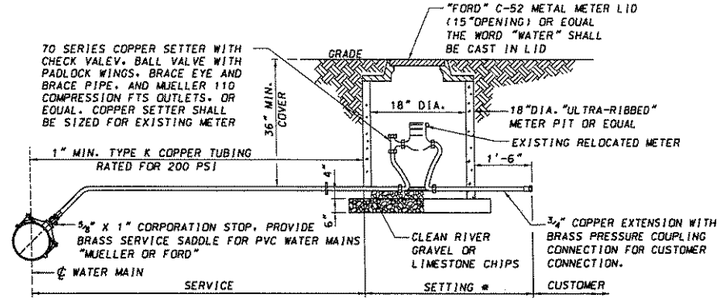

* PAY ITEM 670016-001.RELOCATE METER PER EACH. ALL NEW COMPONENTS EXCEPT METER.

DETAIL TYPICAL HOUSE CONNECTION
NO SCALE

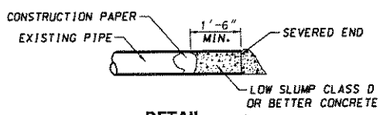

DETAIL PLUGGING ABANDONED WATERLINES
NO SCALE

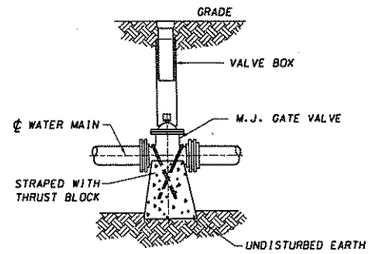

DETAIL GATE VALVE THRUST BLOCKING
NO SCALE

S.F. UNDISTRUBED SOIL BEARING AREA REQUIRED IF S_a=2000P.S.I.									
PIPE SIZE INCHES	DESIGN PRESSURE (MAXIMUM OPERATING + TEST)								
	11 1/4°			22 1/2°			45°		
	100 PSIG	150 PSIG	200 PSIG	100 PSIG	150 PSIG	200 PSIG	100 PSIG	150 PSIG	200 PSIG
4"	1.0	1.0	1.0	1.0	1.0	1.0	1.0	1.0	1.0
6"	1.0	1.0	1.0	1.0	1.0	1.2	1.1	1.7	2.2
8"	1.0	1.0	1.0	1.0	1.5	2.0	2.0	3.0	4.0
10"	1.0	1.2	1.6	1.6	2.4	3.1	3.1	4.6	6.1
12"	1.2	1.7	2.3	2.3	3.4	4.5	4.4	6.6	8.7
	90°			TEE			DEAD END		
	100 PSIG	150 PSIG	200 PSIG	100 PSIG	150 PSIG	200 PSIG	100 PSIG	150 PSIG	200 PSIG
4"	1.0	1.4	1.8	1	1	1	1	1	2
6"	2.1	3.1	4.1	2	2	3	2	3	4
8"	3.7	5.5	7.3	3	4	5	3	4	6
10"	5.6	8.4	11.2	5	6	8	5	8	10
12"	8.0	12.1	16.0	6	8	11	7	11	14

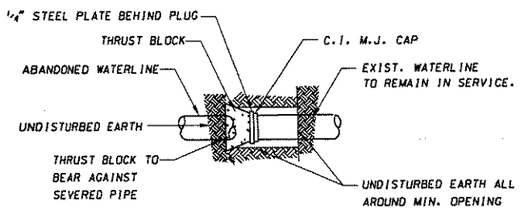

DETAIL PLUGGING TERMINAL END OF WATERLINES
NO SCALE

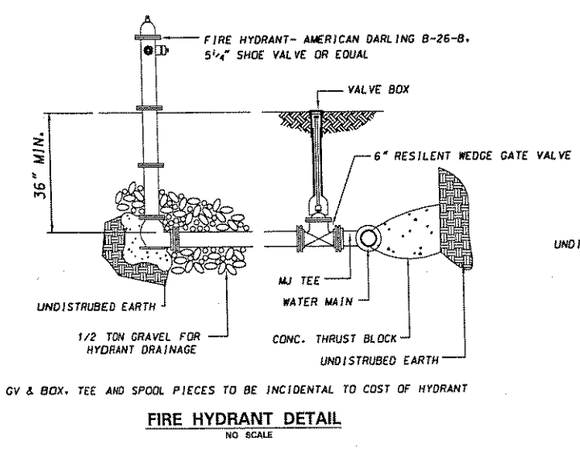

GV & BOX. TEE AND SPOOL PIECES TO BE INCIDENTAL TO COST OF HYDRANT

FIRE HYDRANT DETAIL
NO SCALE

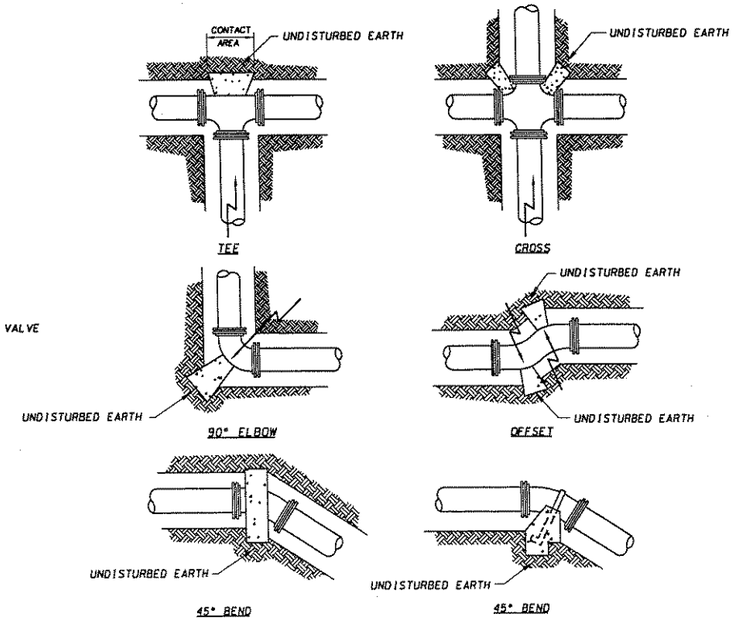

THRUST BLOCKING DETAILS
NO SCALE

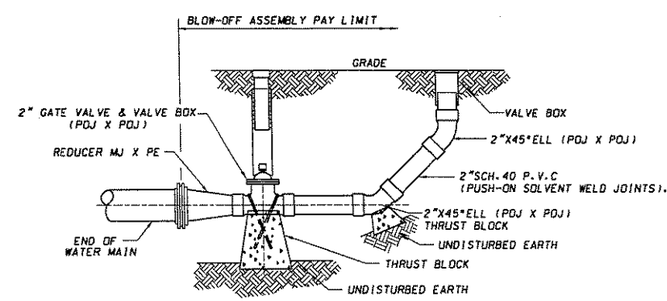

DETAIL BLOW-OFF ASSEMBLY
NO SCALE

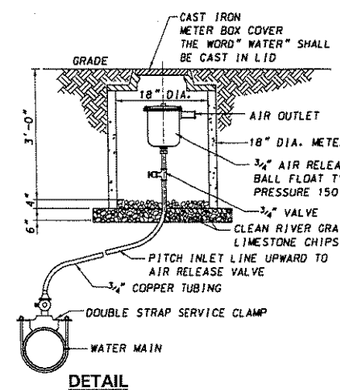

DETAIL AIR RELEASE VALVE ASSEMBLY
NO SCALE

DWG. NO. W-6

PREPARED BY
URS
CHARLESTON, WV

REVISION NUMBER	SHEET NUMBER	REVISION	DATE	BY

THE WEST VIRGINIA DEPARTMENT OF TRANSPORTATION
DIVISION OF HIGHWAYS

WATERLINE RELOCATION SPECIAL DETAILS

P:\WVDOH SCOTT SLAB BRIDGE\CADD\Structure\PLANS\8-15-07\V10 of 931-dg-reloc_dtl_scottslab(7.86.2005).dgn 8/16/2007
1:46:04 PM

Public Roads Div.	State Dist. No.	State Project No.	Federal Project No.	Fiscal Year	County	Sheet No.	Total Sheets
W.V.	04	S317 -12- 0.89 00	BR-0012 (042)E	2006	HARRISON	71	93

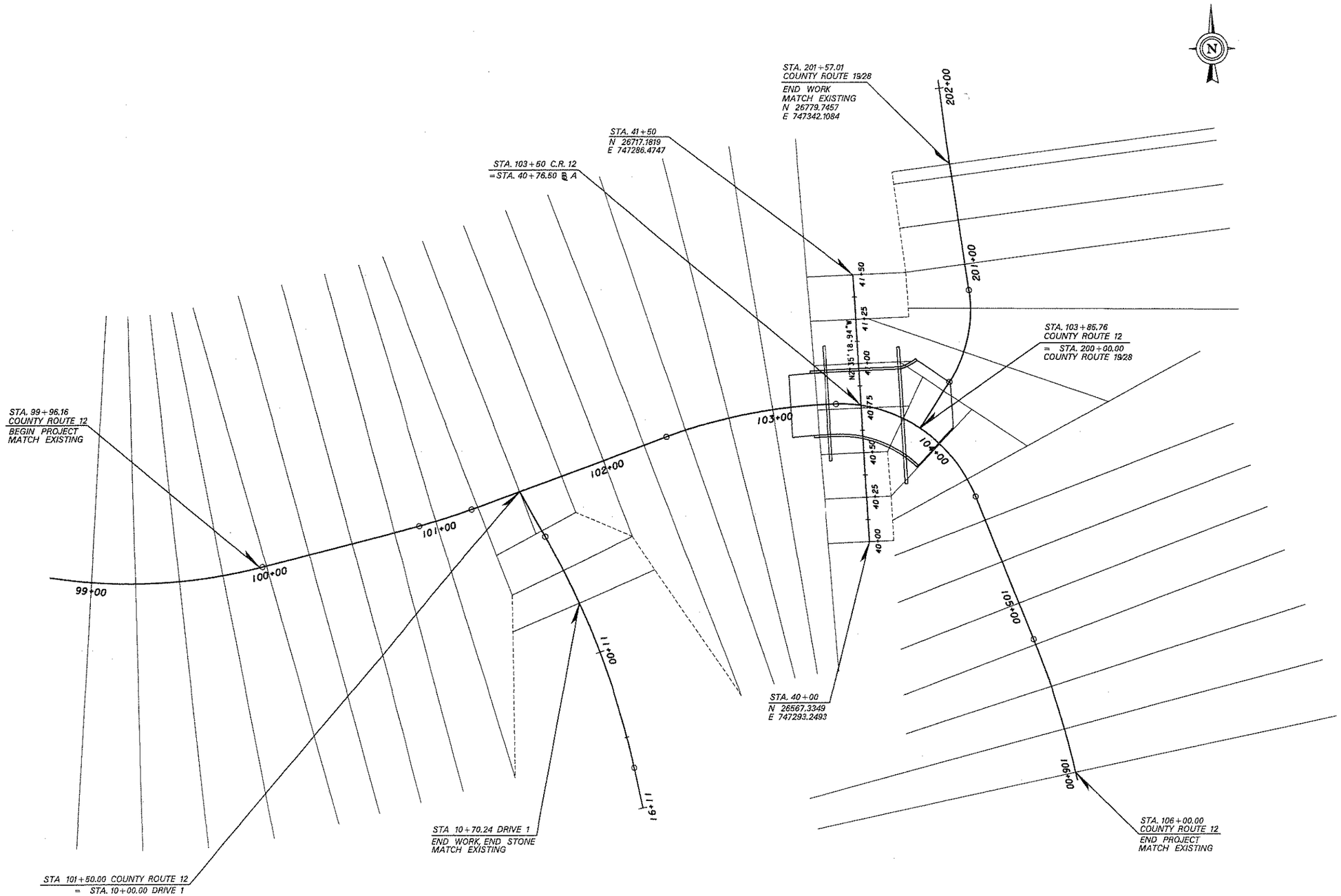

SCALE : 0 30 ft.

PREPARED BY
URS
CHARLESTON, WV

REVISION NUMBER	SHEET NUMBER	REVISION	DATE	BY

THE WEST VIRGINIA DEPARTMENT OF TRANSPORTATION
DIVISION OF HIGHWAYS

METHOD OF SECTIONS

P:\WVDOH SCOTT SLAB BRIDGE\CADD\Structure\PLANS\8-15-07\71 of 93rdy_xsc_math_scottslab.dgn 8/16/2007 1:46:28 PM

J06C29C9B-PLAN