WEST VIRGINIA
DEPARTMENT OF TRANSPORTATION
DIVISION OF HIGHWAYS
PLANS FOR CONSTRUCTION
OF
STATE HIGHWAY

FEDERAL PROJECT NO. BR-0013 (042) E

STATE PROJECT NO. U305-13-0.02 00

ROUTE NO. C.R. 13

WEIRTON DISTRICT

BROOKE COUNTY

THREE SPRINGS DRIVE BRIDGE

	Station		Station		feet		mile (s)
ROADWAY CR 13	101+00.00	to	106+38.08	=	538.08	=	0.10
BRIDGE CR 13	106+38.08	to	108+58.58	=	220.50	=	0.04
ROADWAY CR 13	108+58.58	to	114+33.00	=	574.42	=	0.11
			Total Project Length =		1333.00	=	0.25

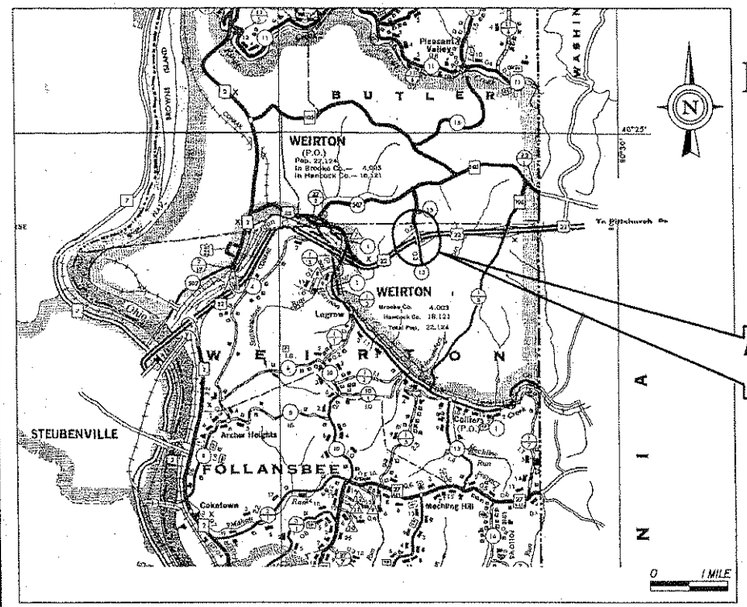

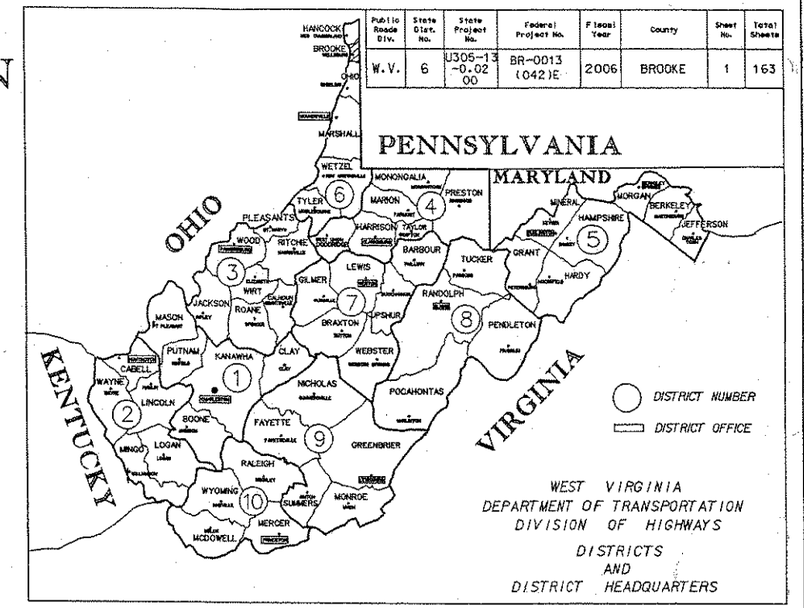

Public Roads Div.	State Dist. No.	State Project No.	Federal Project No.	Fiscal Year	County	Sheet No.	Total Sheets
W.V.	6	U305-13 -0.02 00	BR-0013 (042)E	2006	BROOKE	1	163

UTILITIES

MONONGAHELA POWER COMPANY, A DIVISION OF ALLEGHENY POWER

MOUNTAINEER GAS COMPANY

VERIZON WEST VIRGINIA, INC

TYPE OF CONSTRUCTION

GRADING, DRAINAGE, PAVING, SIGNING, PAVEMENT MARKINGS, LIGHTING, SIGNALS AND BRIDGE # 10565

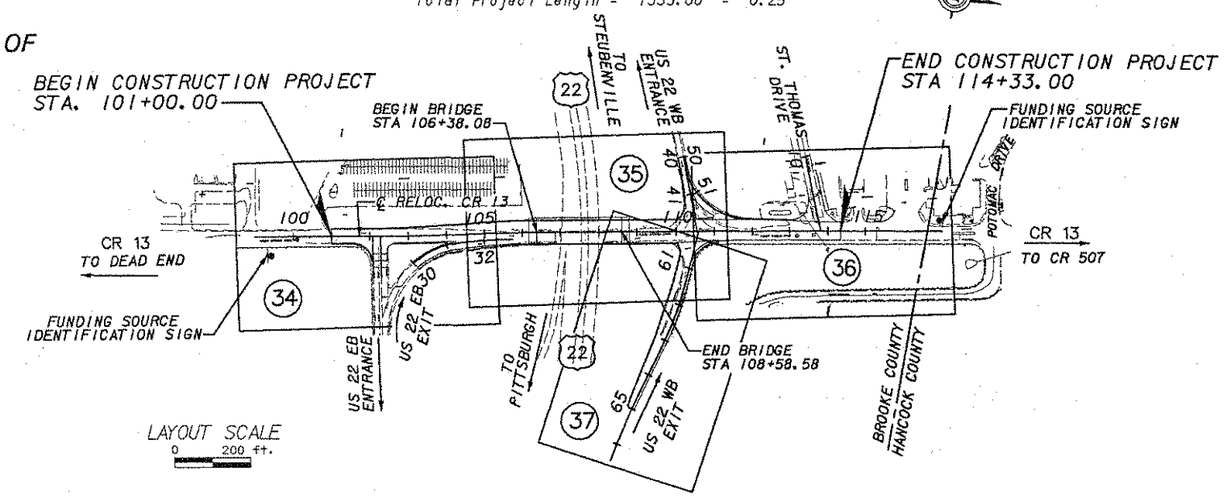

NOTES: STANDARD DETAIL BOOK VOL. I DATED JANUARY 1, 2000 & VOLUME II DATED JANUARY 1, 1994, SHALL APPLY TO THIS PROJECT.

SCALES

PLAN HOR. 0 20 ft.

PROFILE VERT. 0 5 ft. HOR. 0 20 ft.

DESIGN DESIGNATION	
A.D.T.	(2004) = 11,000
A.D.T.	(2024) = 16,000
D.H.V.	= 17%
D	= 60/40
T	= 1%
V	= 30 mph

CONVENTIONAL SIGNS

STATE LINE
COUNTY LINE
CORPORATION LINE
PROPOSED R/W LINE
PROPERTY LINE
EXISTING FENCE
PROPOSED FENCE
EDGE OF STREAM
PROPOSED GUARD RAIL
EXISTING GUARD RAIL
RAILROAD
GAS LINE
WATER LINE
TELEPHONE LINE
ELECTRIC LINE
TELEPHONE POLE
POWER POLE
COMBINED POWER AND TELEPHONE POLE
TREE
SHRUB
RIGHT OF WAY MARKER
FBD FLAT BOTTOM DITCH

INDEX TO SHEETS

NO.	DESCRIPTION
1	TITLE
2-8	TYPICAL SECTIONS
9	GENERAL NOTES
10-11	SUMMARY OF ESTIMATED QUANTITIES
12-15	QUANTITY TABLES
16-18	SPECIAL DETAILS
19	TRAFFIC SKETCH MAP
20-21	REFERENCE POINTS
22-23	GEOMETRIC LAYOUT
24-33	MAINTENANCE OF TRAFFIC
34-37	CONSTRUCTION PLANS
38	PAVEMENT RECONSTRUCTION
39	JOINT LAYOUT PLAN
40-42	INTERSECTION DETAILS
43-49	PROFILES
50-55	SIGNING AND PAVEMENT MARKINGS
56-57	SIGNAL PLANS
58-61	LIGHTING PLANS
62-66	SOIL AND GEOLOGICAL PLANS
67-73	GEOLOGICAL PROFILES
74-125	BRIDGE PLANS
125-126	OWNERSHIP INDEX & PROPERTY MAPS
127-163	CROSS SECTIONS

The WVDOH approved order of sheets defined after the submission of this project. For the new order of sheets please refer to Design Directive DD-701.

REVISION NUMBER	SHEET NUMBER	REVISIONS	DATE	BY

I HEREBY CERTIFY THAT THIS IS A CORRECT COPY OF THE PLANS OF PROJECT U305-13-0.02 00, BR-0013 (042) E

2-9 2006

Kay Hutchinson
EXECUTIVE SECRETARY

PLANS PREPARED BY

HDR ENGINEERING, INC.
CONSULTING ENGINEERS
WERTON, WV (304) 748-8740

Scott Bohm 2/6/06
REGISTERED PROFESSIONAL ENGINEER DATE

SCOTT BOHM REGISTERED 13212 STATE OF WEST VIRGINIA PROFESSIONAL ENGINEER

RECOMMENDED Chad Lowther
DESIGNER

RECOMMENDED FOR APPROVAL
STATE HIGHWAY ENGINEER

APPROVED Paul A. Matox Jr.
COMMISSIONER OF HIGHWAYS

PROJECT NO. U305-13-0.02 00, BR-0013 (042) E

FILE: x:\14361\dy_ht_3361\01.dgn DATE: 2/6/2006 AS-

PUBLIC ROADS DIV.	STATE DIST. NO.	STATE PROJECT NO.	FEDERAL PROJECT NO.	FISCAL YEAR	COUNTY	SHEET NO.	TOTAL SHEETS
W.V.	6	U305-13 -0.02 00	BR-0013 (042)E	2006	BROOKE	91	163

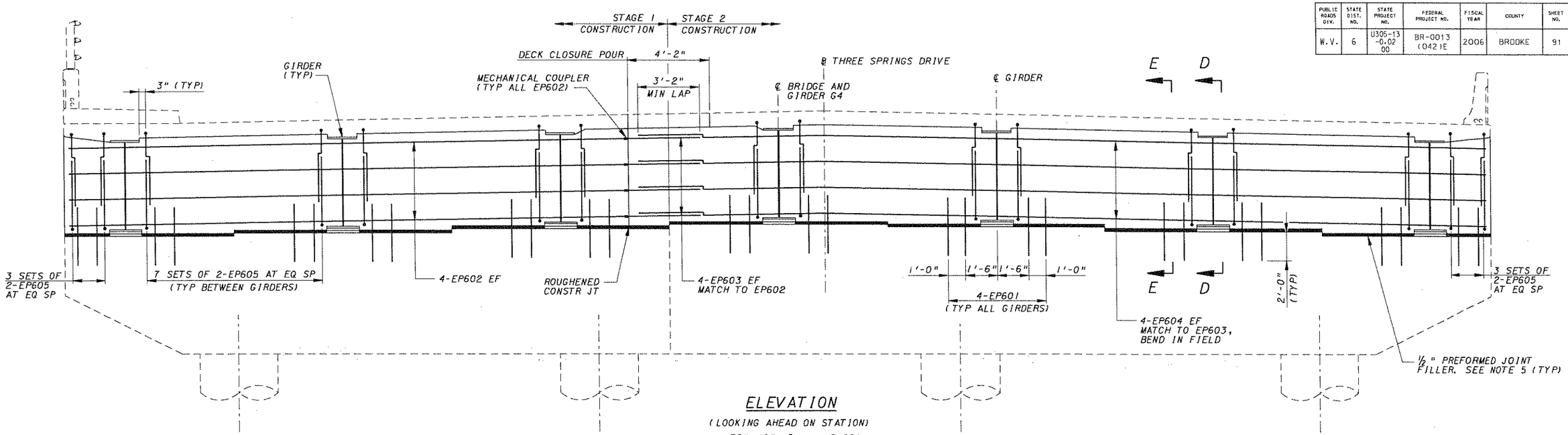

ELEVATION

(LOOKING AHEAD ON STATION)

32" 16" 0 2.66'

⅜" = 1'-0"

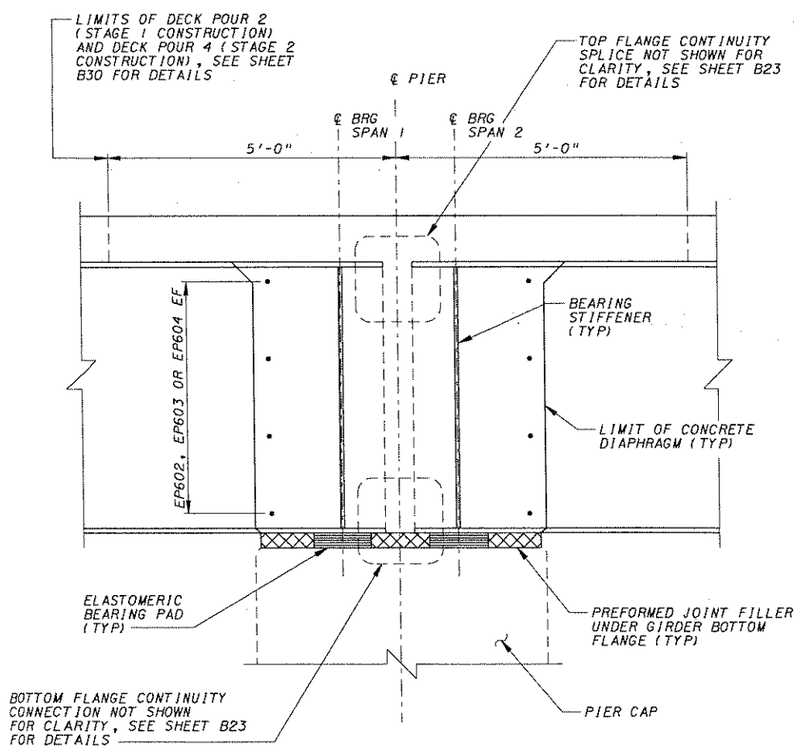

SECTION D-D

16" 8" 0 1.33'

¾" = 1'-0"

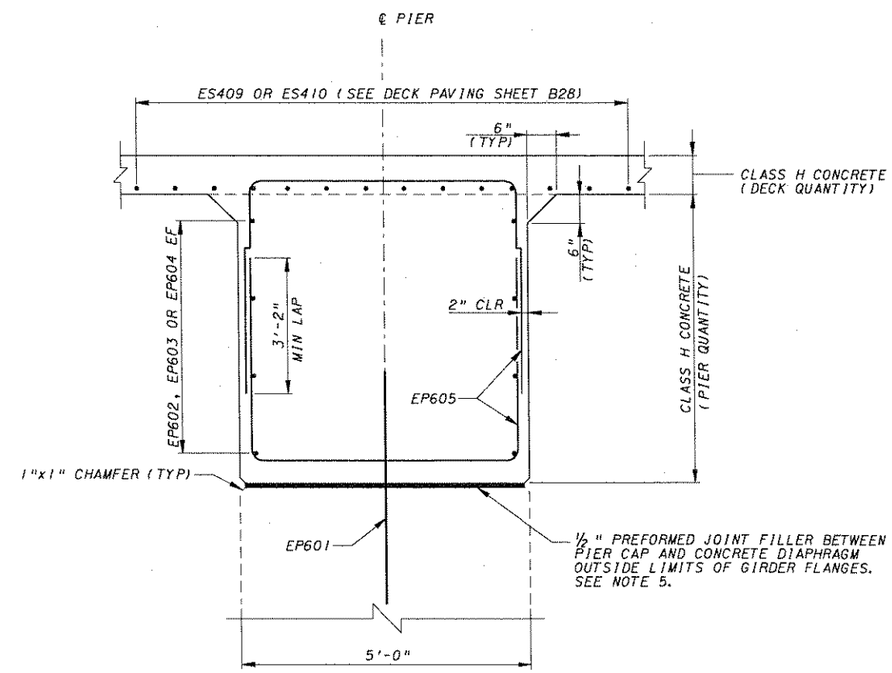

SECTION E-E

16" 8" 0 1.33'

¾" = 1'-0"

NOTES:

1. FOR PIER PLAN AND ELEVATION, SEE SH B16.
2. FOR GIRDER CONTINUITY SPLICE DETAILS, SEE SH B23.
3. FF INDICATES FRONT FACE
   RF INDICATES REAR FACE
   EF INDICATES EACH FACE
4. THE CONTINUITY DIAPHRAGM IS INTEGRALLY CAST WITH THE DECK. THE GIRDERS ARE EMBEDDED 9" BEYOND THE BEARING CENTERLINE. CHAMFER THE CREVICE BETWEEN THE GIRDER AND DIAPHRAGM 1" AND SEAL IT WITH A COMPATIBLE MATERIAL (ASTM C920, TYPE 2, GRADE NS, CLASS 25, USES NT AND M).
5. ½" PERFORMED JOINT FILLER SHALL BE SPONGE RUBBER, TYPE 1, CONFORMING TO SUBSECTION 708.1.1. THE COST OF THE FILLER SHALL BE INCLUDED IN ITEM 601009-001, "CLASS H CONCRETE".
6. FOR ADDITIONAL NOTES, SEE SH B16.

REVISION NUMBER	SHEET NUMBER	REVISION	DATE	BY

THE WEST VIRGINIA DEPARTMENT OF TRANSPORTATION
DIVISION OF HIGHWAYS

THREE SPRINGS DRIVE BRIDGE REPLACEMENT

PIER

CONTINUITY DIAPHRAGM

HDR ENGINEERING, INC.
CONSULTING ENGINEERS
WEIRTON, WV (304) 748-8740

DESIGNED BY APR	DRAWN BY APR	CHECKED BY JWB	BRIDGE NO. 10565
DATE 06-05	DATE 06-05	DATE 08-05	SHEET NO. B18

FILE: x:\4361\bri\dgn\STR_PTR_35093.dgn

PUBLIC ROADS DIV.	STATE DIST. NO.	STATE PROJECT NO.	FEDERAL PROJECT NO.	FISCAL YEAR	COUNTY	SHEET NO.	TOTAL SHEETS
W.V.	6	U305-13 -0.02 00	BR-0013 (042)E	2006	BROOKE	92	163

REINFORCEMENT BAR SCHEDULE

MARK	SIZE	LENGTH	NO.	TYPE	A	B	C	D	E	F	G	H	J	K	R	REMARKS
P501	5	14'-9"	124	18	5½"			3'-8"				2'-4"			1'-9⅜"	A IS 135° HOOK
P502	5	13'-2"	252	12	4'-3"	4'-8"	4'-3"									63 SETS OF 4
P503	5	9'-6" TO 13'-0"	104	12	2'-5" TO 4'-2"	4'-8"	2'-5" TO 4'-2"									26 SETS OF 4 VARY A AND C BY 1¾" FOR EACH SET
P601	6	8'-8"	130	STR												
P602	6	26'-11" TO 30'-11"	6	STR												(1), VARY BY 2'-0"
P603	6	30'-11"	4	STR												(1)
P604	6	38'-1" TO 42'-1"	6	STR												(2), MATCH P602 VARY BY 2'-0"
P605	6	42'-1"	4	STR												(2), MATCH P603
P606	6	10'-4"	12	12	2'-10"	4'-8"	2'-10"									
P901	9	26'-0"	38	STR												(1)
P902	9	37'-2"	38	STR												(2), MATCH P901
P1001	10	24'-10"	84	10	1'-10"	23'-0"										
P1002	10	31'-7"	10	2	6'-6"	25'-1"						3'-0"				(1)
P1003	10	30'-11"	10	STR												(1)
P1004	10	18'-9"	10	STR												(2), MATCH P1002
P1005	10	31'-11"	10	2	6'-6"	25'-5"						3'-0"				
P1006	10	20'-3"	10	2	7'-10"	12'-5"						3"				(2), MATCH P1003
P1007	10	32'-11"	10	STR												
EP601	6	4'-0"	28	STR												
EP602	6	28'-10"	8	STR												(1)
EP603	6	4'-0"	8	STR												(2), MATCH EP602
EP604	6	43'-2"	8	STR												(3)
EP605	6	13'-0"	96	12	4'-2"	4'-8"	4'-2"									48 SETS OF 2

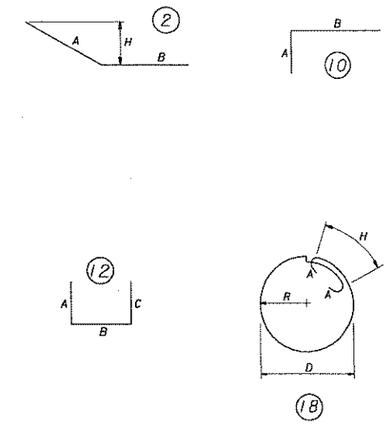

REINFORCING BAR NOTES:

1. "J" DIMENSIONS ON 180° HOOKS TO BE SHOWN ONLY WHERE NECESSARY TO RESTRICT HOOK SIZE OTHERWISE STANDARD HOOKS ARE TO BE USED.
2. ALL DIMENSIONS ARE OUT TO OUT OF BAR EXCEPT "A" AND "G" ON STANDARD 135° AND 180° HOOKS, AND "R" WHICH IS SHOWN TO THE INSIDE OF THE BAR.
3. FIGURES IN CIRCLES SHOW TYPES.
4. "E" IN BAR MARK INDICATES EXPOXY COATED.
5. DO NOT USE RAIL STEEL (A616) IN BRIDGE ABUTMENTS, FOOTINGS AND WHERE BENDING OF REINFORCEMENT BARS IS INDICATED.
6. REINFORCING BAR SCHEDULE IS FOR INFORMATION ONLY. VERIFY SCHEDUULE PRIOR TO BIDDING AND FABRICATION.
7. NO CORRECTION IN LENGTH FOR BEND CURVATURE IS TO BE MADE.
8. BAR LENGTHS DO NOT ACCOUNT FOR REQUIRED CORRECTION FOR MECHANICAL COUPLERS.

NOTES:

1. FOR GENERAL NOTES, SEE SH B5 AND B6.
2. THE COST OF MECHANICAL COUPLERS IS INCIDENTAL TO ITEMS 602001-001 "REINFORCING STEEL BAR" AND 602002-001 "EPOXY COATED REINFORCING STEEL BAR".
3. MECHANICAL COUPLERS SHALL DEVELOP AT LEAST 125% OF THE SPECIFIED YIELD STRENGTH OF THE REINFORCING BAR.

REMARK KEY:

(1) ONE END INCLUDES MECHANICAL COUPLER
(2) PREPARE ONE END FOR MECHANICAL COUPLER
(3) BEND IN FIELD

REVISION NUMBER	SHEET NUMBER	REVISION	DATE	BY

THE WEST VIRGINIA DEPARTMENT OF TRANSPORTATION
DIVISION OF HIGHWAYS

THREE SPRINGS DRIVE BRIDGE REPLACEMENT

PIER

REINFORCEMENT BAR SCHEDULE

HDR ENGINEERING, INC.
CONSULTING ENGINEERS
WEIRTON, WV (304) 748-8740

DESIGNED BY APR	DRAWN BY BJS	CHECKED BY JWB	BRIDGE NO. 10565
DATE 06-05	DATE 06-05	DATE 08-05	SHEET NO. B19

FILE:xl\1436\bridge\STHcoPR_35PR2.dgn

PUBLIC ROADS DIV.	STATE DIST. NO.	STATE PROJECT NO.	FEDERAL PROJECT NO.	FISCAL YEAR	COUNTY	SHEET NO.	TOTAL SHEETS
W.V.	6	U305-13 -0.02 00	BR-0013 (042)E	2006	BROOKE	93	163

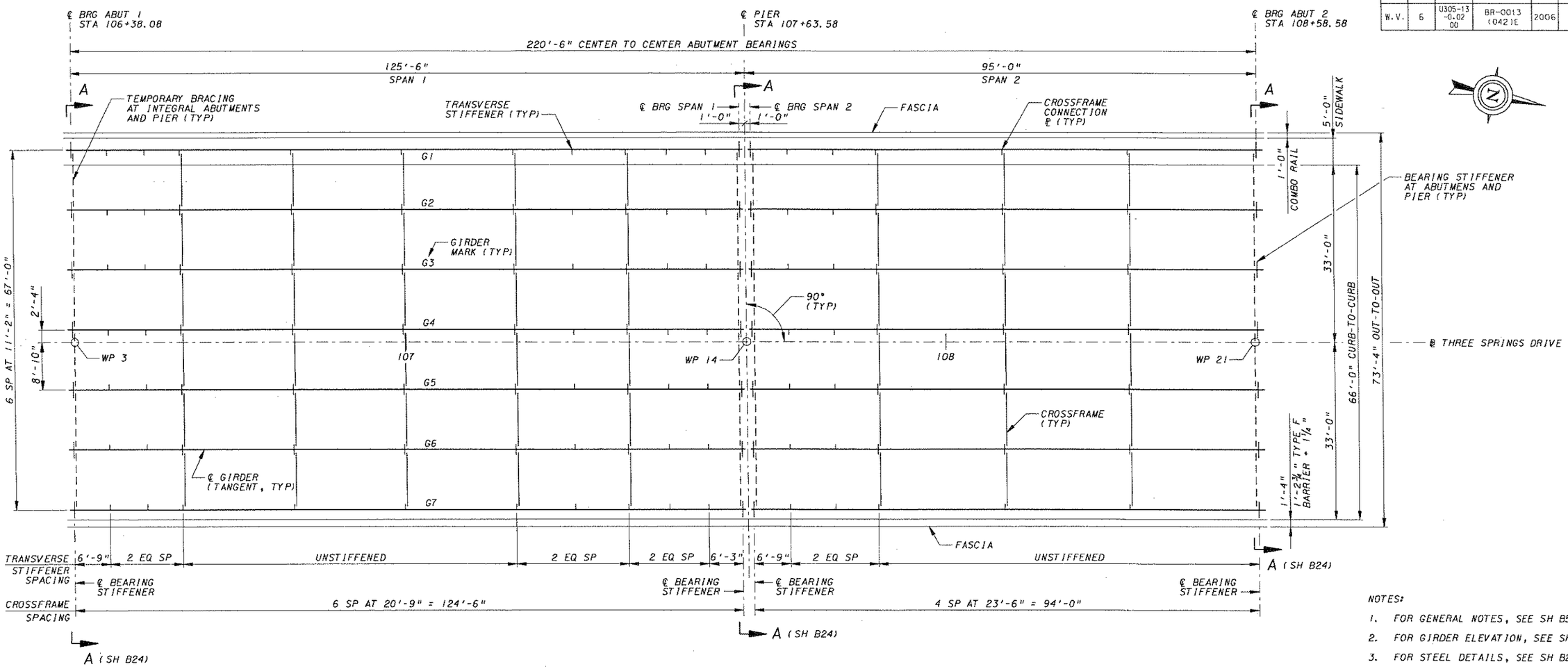

FRAMING PLAN

10' 0 10'

1" = 10'-0"

NOTES:

1. FOR GENERAL NOTES, SEE SH B5 AND B6.
2. FOR GIRDER ELEVATION, SEE SH B21.
3. FOR STEEL DETAILS, SEE SH B22 AND B23.
4. FOR CROSSFRAME DETAILS, SEE SH B24.
5. FOR TEMPORARY BRACING AT ABUTMENTS AND PIER, SEE SH B24.
6. FOR BEARING DETAILS, SEE SH B27.
7. FOR ORIENTATION OF ABUTMENTS AND PIER, SEE STAKE-OUT PLAN, SH B3.
8. OVERHANG FORMS SHALL BE SUPPORTED FROM THE TEMPORARY EXTERIOR GIRDER (G3 AND G4) AND FINAL EXTERIOR GIRDER (G1 AND G7) BOTTOM FLANGE. FOR ALTERNATE OVERHANG FORMING SYSTEMS, THE MAXIMUM TRANSVERSE STIFFENER SPACING FOR GIRDERS G1, G3, G4 AND G7 SHALL BE 54".
9. FOR STIFFENER DETAILS, SEE SH B22. TRANSVERSE STIFFENER PLATE TO BE ⅜"x6" GR. 50W. STIFFENERS TO BE PLACED ON INTERIOR FACE OF FASCIA GIRDER WEBS.

THE WEST VIRGINIA DEPARTMENT OF TRANSPORTATION
DIVISION OF HIGHWAYS

THREE SPRINGS DRIVE BRIDGE REPLACEMENT

FRAMING PLAN

REVISION NUMBER	SHEET NUMBER	REVISION	DATE	BY

HDR ENGINEERING, INC.
CONSULTING ENGINEERS
WEIRTON, WV (304) 748-8740

DESIGNED BY JWB	DRAWN BY BJS	CHECKED BY APR	BRIDGE NO. 10565
DATE 06-05	DATE 06-05	DATE 08-05	SHEET NO. B20

FILE:xl\436\brdgs\STR_FRM_3SPR.DGN

PUBLIC ROADS DIV.	STATE DIST. NO.	STATE PROJECT NO.	FEDERAL PROJECT NO.	FISCAL YEAR	COUNTY	SHEET NO.	TOTAL SHEETS
W.V.	6	U305-13 -0.02 00	BR-0013 (042)E	2006	BROOKE	94	163

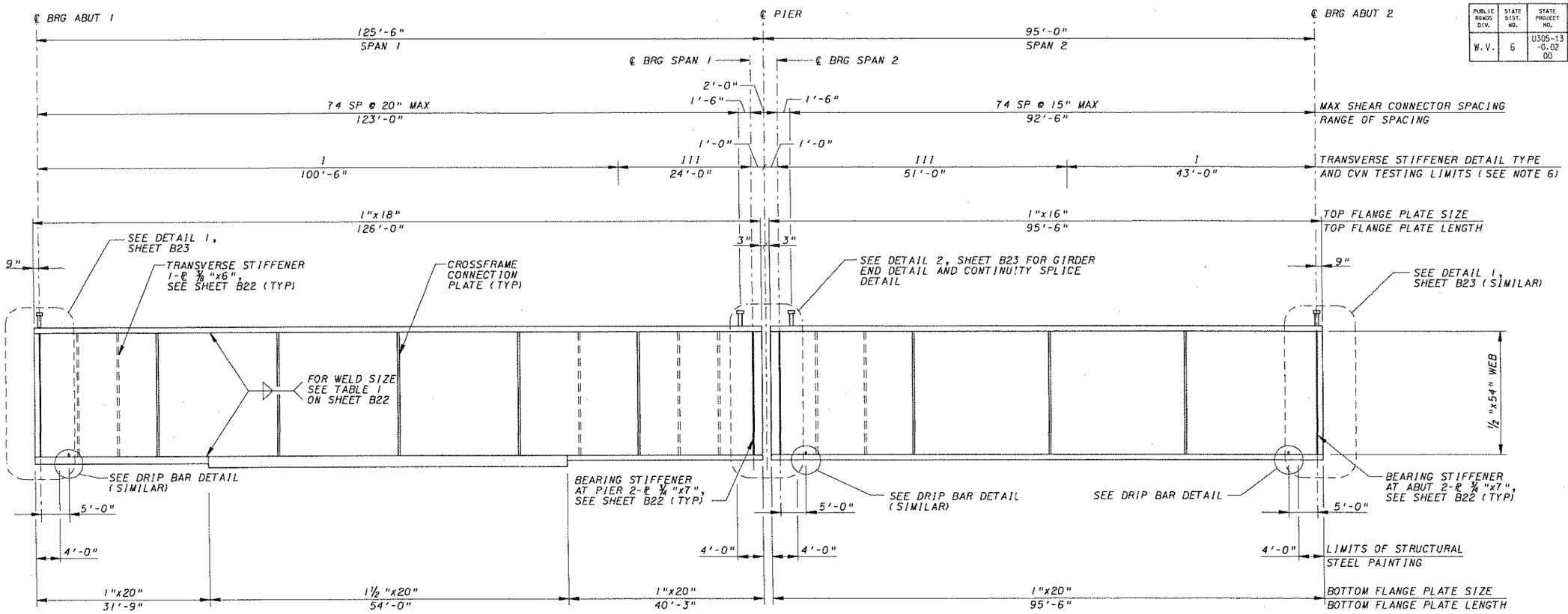

GIRDER ELEVATION

(LENGTHS MEASURED ALONG ℄ GIRDER)
(GIRDER G1 SHOWN, OTHER GIRDERS SIMILAR)
NO SCALE

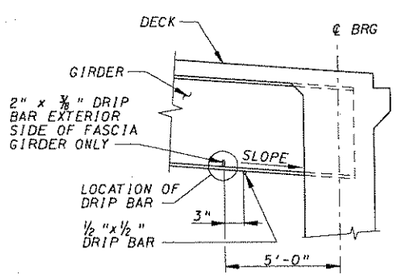

DRIP BAR LOCATIONS

(ABUTMENT 2 SHOWN, ABUTMENT 1 AND PIER SIMILAR)
NO SCALE

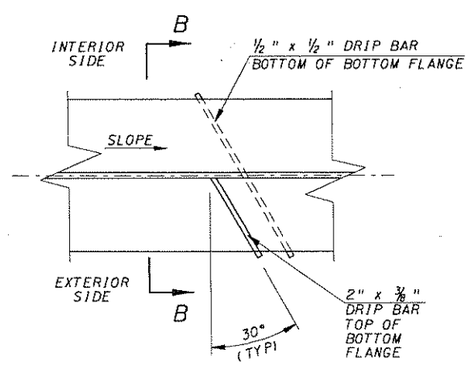

DRIP BAR DETAIL

NO SCALE

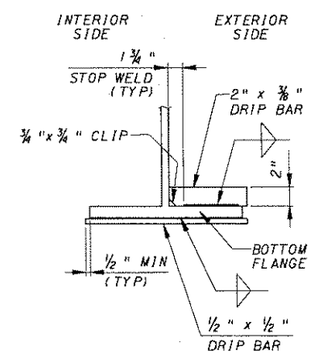

SECTION B-B

NO SCALE

NOTE:

DRIP BAR ON TOP OF BOTTOM FLANGE SHALL BE CAULKED WITH DARK BROWN CAULKING AGAINST FLANGE, WEB, AND FILLET WELD SUBJECT TO THE APPROVAL OF THE ENGINEER. INCLUDE COST IN ITEM 615001-001.

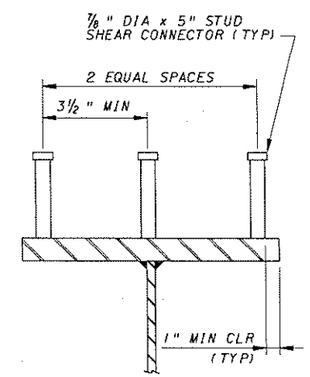

TYPICAL SHEAR CONNECTOR DETAIL

NO SCALE

NOTES:

1. FOR GENERAL NOTES, SEE SH B5 AND B6.
2. FOR FRAMING PLAN, SEE SH B20.
3. FOR STEEL DETAILS, SEE SH B22 AND B23.
4. FOR CROSSFRAME DETAILS, SEE SHEET B24.
5. ALL GIRDER FLANGE AND WEB MATERIAL TO BE GRADE 50W-T2. ALL STIFFENERS AND CONNECTION PLATES TO BE GRADE 50W.
6. GIRDER FLANGE AND WEB PLATES IN TENSION SHALL CONFORM TO CVN (CHARPY V-NOTCH) TESTING REQUIREMENTS, IN ACCORDANCE WITH THE STANDARD SPECIFICATIONS.

DETAIL TYPE	GIRDER TENSION COMPONENTS
I	TENSION BOTTOM FLANGE AND WEB
III	TENSION TOP AND BOTTOM FLANGES AND WEB (REVERSAL REGION)

7. FOR CAMBER TABLE, SEE SH B26.
8. THE CONTRACTOR SHALL MAKE PROVISIONS TO INSURE THE STABILITY OF THE GIRDERS DURING SHIPPING, HANDLING AND ERECTION.

REVISION NUMBER	SHEET NUMBER	REVISION	DATE	BY

THE WEST VIRGINIA DEPARTMENT OF TRANSPORTATION
DIVISION OF HIGHWAYS

THREE SPRINGS DRIVE BRIDGE REPLACEMENT

GIRDER ELEVATION

HDR ENGINEERING, INC.
CONSULTING ENGINEERS
WEIRTON, WV (304) 748-8740

DESIGNED BY JWB	DRAWN BY BJS	CHECKED BY APR	BRIDGE NO. 10565
DATE 06-05	DATE 06-05	DATE 08-05	SHEET NO. B21

FILE=#1\436\bridges\STR_SUP_3SPRI.dgn

PUBLIC ROADS DIV.	STATE DIST. NO.	STATE PROJECT NO.	FEDERAL PROJECT NO.	FISCAL YEAR	COUNTY	SHEET NO.	TOTAL SHEETS
W.V.	6	U305-13 -0.02 00	BR-0013 (042)E	2006	BROOKE	95	163

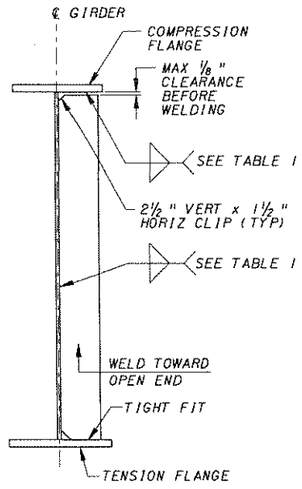

TYPE I

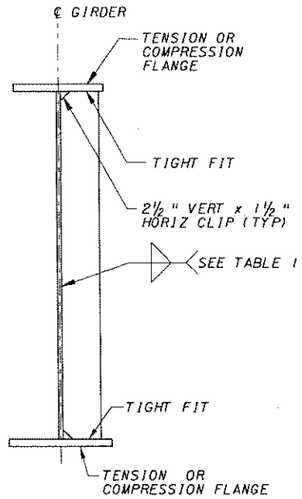

TYPE III

TRANSVERSE STIFFENER DETAILS

NO SCALE

GIRDER FLANGE AND WEB PLATES SHALL CONFORM TO CVN (CHARPY V-NOTCH) TESTING REQUIREMENTS AS FOLLOWS:

TYPE I - BOTTOM FLANGE AND WEB

TYPE III - TOP AND BOTTOM FLANGES AND WEB

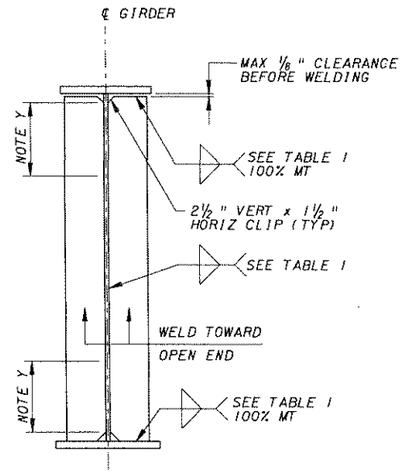

CROSSFRAME CONNECTION PLATE DETAIL

(INTERIOR GIRDER SHOWN)

NO SCALE

NOTE: CONNECTION PLATES REQUIRED ONLY ON INSIDE FACE OF EXTERIOR GIRDERS.

NOTE Y: 100% MT OF CONN PLATE TO WEB WELDS AT ALL CROSSFRAME TOP AND BOTTOM GUSSET PLATES.

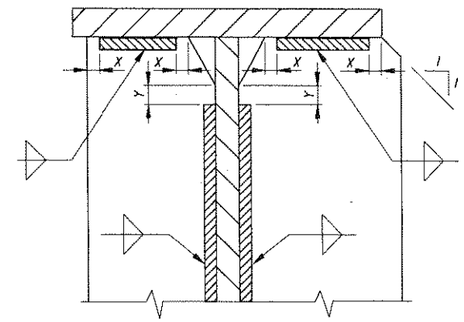

X: END WELD 1/4" ± 1/8" FROM END OF PLATE OR FLANGE.
Y: END WELD 1/2" ± 1/8" FROM END OF PLATE.

STIFFENER AND CONNECTION PLATE WELD TERMINATION DETAILS

NO SCALE

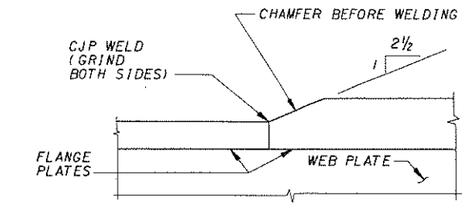

NOTE: GRIND WELD IN DIRECTION OF STRESS ←→

FLANGE SPLICE DETAIL-ELEVATION

(TO BE USED AT FLANGE THICKNESS TRANSITION)

NO SCALE

100% UT OR RT FOR SPLICE IN TENSION REGION

25% UT FOR SPLICE IN COMPRESSION REGION

TABLE 1*	
MATERIAL THICKNESS OF THICKER PART JOINED	MINIMUM FILLET WELD SIZE
3/4" OR LESS	1/4"
OVER 3/4"	5/16"

*FILLET WELD SIZE (UNLESS NOTED)

LEGEND:

MT = MAGNETIC PARTICLE TESTING
RT = RADIOGRAPHIC TESTING
UT = ULTRASONIC TESTING

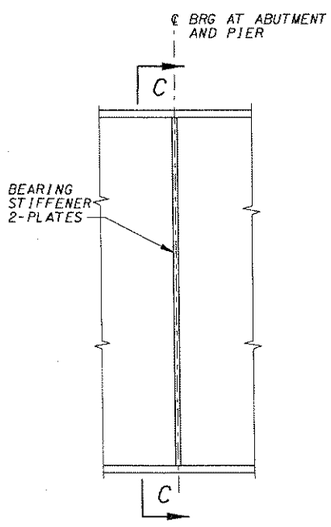

BEARING STIFFENER DETAIL

(ALL BEARING STIFFENERS TO BE VERTICAL UNDER FULL DEAD LOAD)

NO SCALE

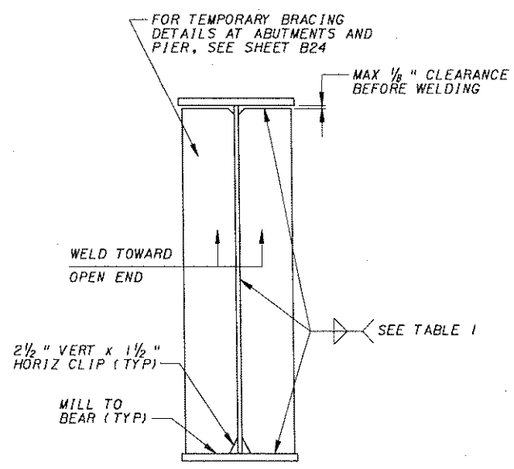

SECTION C-C

NO SCALE

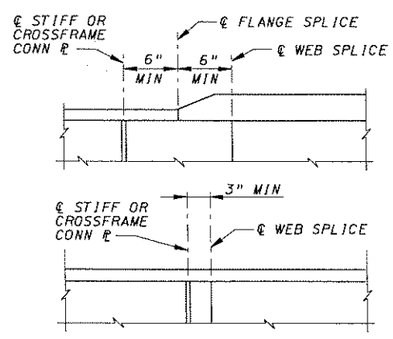

SHOP SPLICE CLEARANCE DETAILS

NO SCALE

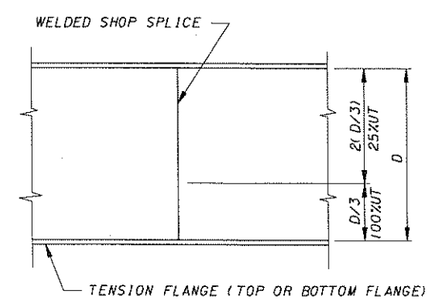

TESTING FOR WELDED SHOP WEB SPLICE

NO SCALE

NOTES:

1. FOR GENERAL NOTES, SEE SH B5 AND B6.
2. FOR WELD SIZES, SEE TABLE 1 THIS SHEET.
3. ALL MATERIAL TO BE GRADE 50W, UNLESS NOTED.
4. TRANSVERSE STIFFENERS SHALL BE EITHER VERTICAL OR NORMAL TO TOP FLANGE.
5. FOR HOLES IN CROSSFRAME CONNECTION PLATES, SEE SH B24.

THE WEST VIRGINIA DEPARTMENT OF TRANSPORTATION
DIVISION OF HIGHWAYS

THREE SPRINGS DRIVE BRIDGE REPLACEMENT

STEEL DETAILS

REVISION NUMBER	SHEET NUMBER	REVISION	DATE	BY

HDR ENGINEERING, INC.
CONSULTING ENGINEERS
WEIRTON, WV (304) 748-8740

DESIGNED BY JWB	DRAWN BY BJS	CHECKED BY APR	BRIDGE NO. 10565
DATE 06-05	DATE 06-05	DATE 08-05	SHEET NO. B22

FILE:H:\1436\bridge\STmodIP_3SPR3.DGN

PUBLIC ROADS DIV.	STATE DIST. NO.	STATE PROJECT NO.	FEDERAL PROJECT NO.	FISCAL YEAR	COUNTY	SHEET NO.	TOTAL SHEETS
W.V.	6	U305-13 -0.02 00	BR-0013 (042)E	2006	BROOKE	96	163

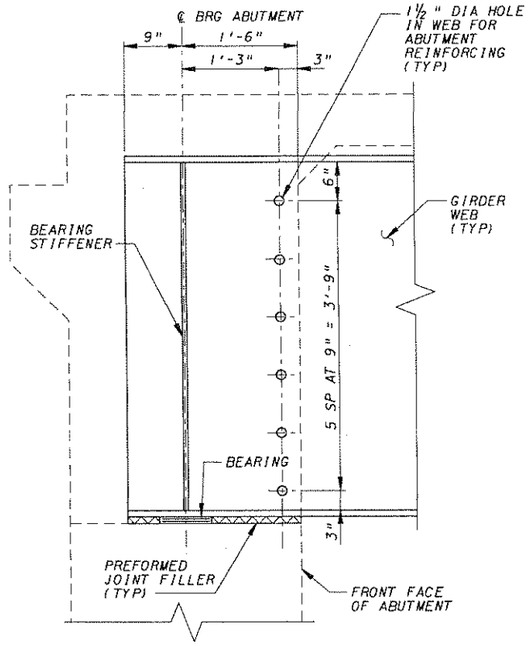

DETAIL 1 - GIRDER END AT ABUTMENT (SH B21)

12" 6" 0 1'
1" = 1'-0"

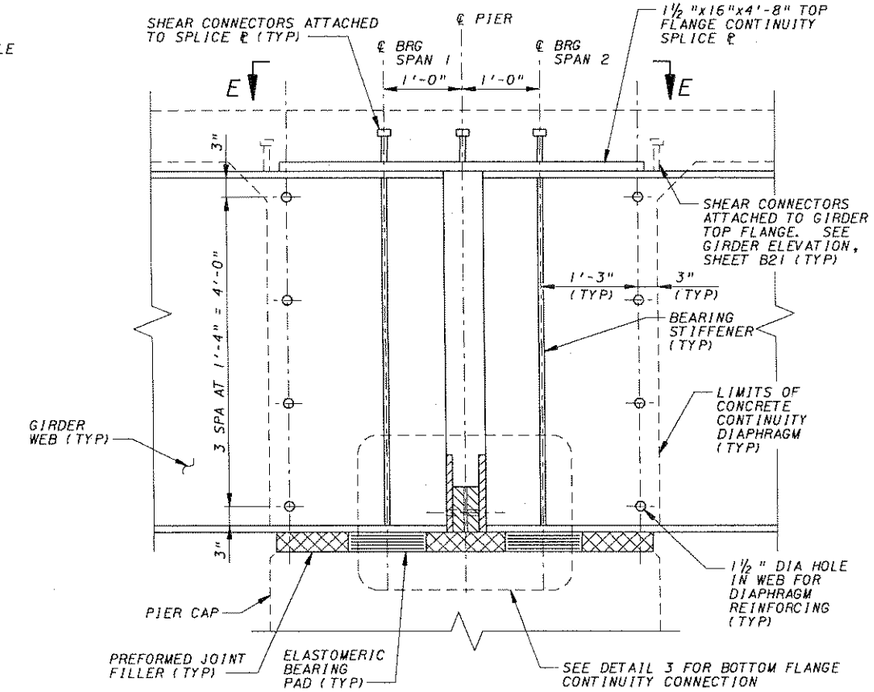

DETAIL 2 - GIRDER END AT PIER AND CONTINUITY SPLICE (SH B21)

12" 6" 0 1'
1" = 1'-0"

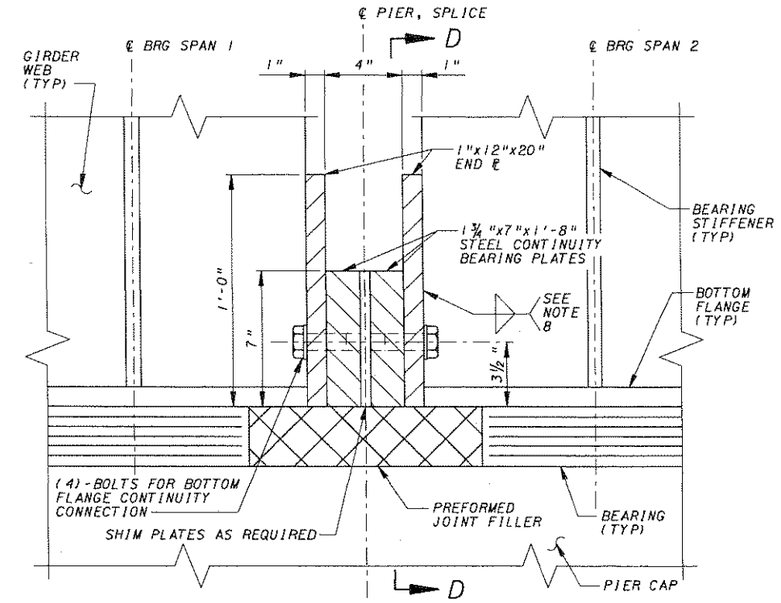

DETAIL 3 - BOTTOM FLANGE CONTINUITY CONNECTION

4" 2" 0 4"
3" = 1'-0"

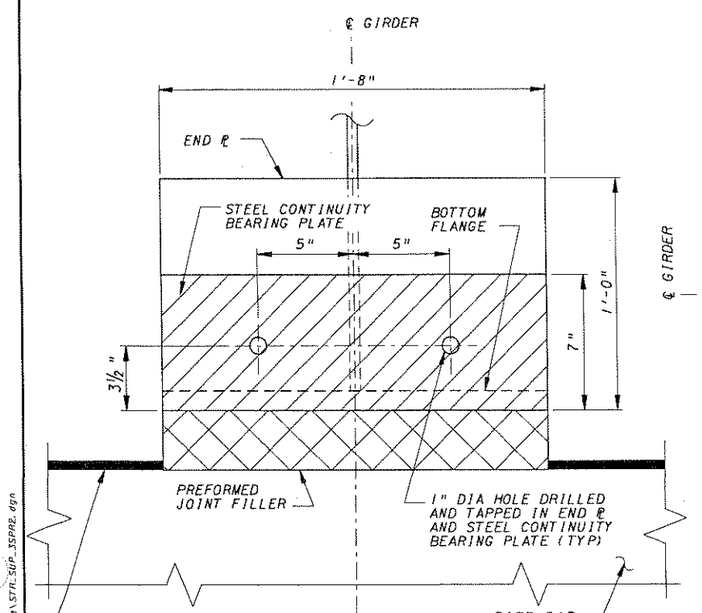

SECTION D-D

4" 2" 0 4"
3" = 1'-0"

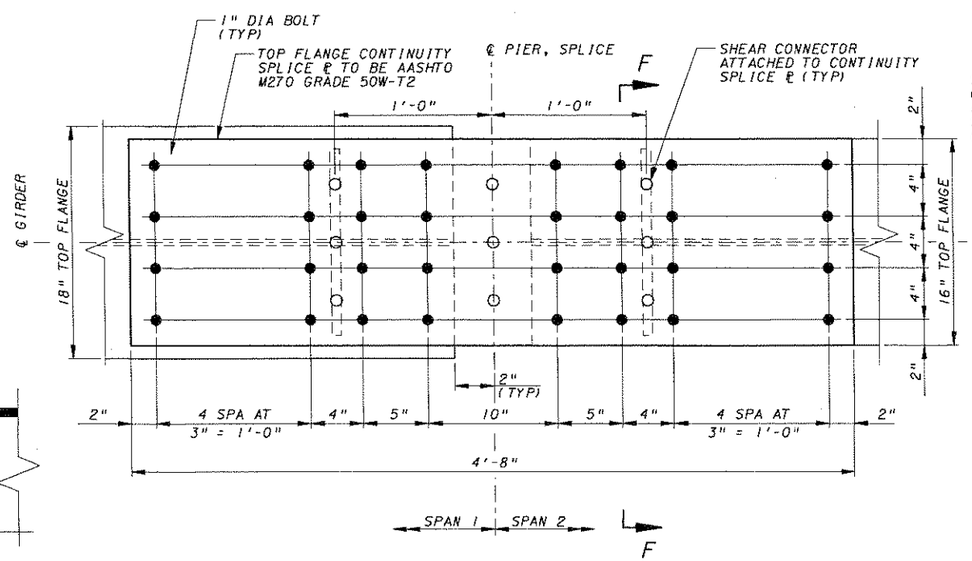

VIEW E-E

6" 3" 0 6"
2" = 1'-0"

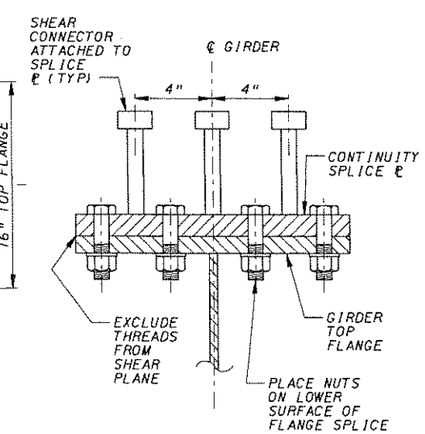

SECTION F-F

NO SCALE

NOTES:

1. FOR GENERAL NOTES, SEE SH B5 AND B6.
2. FOR FRAMING PLAN AND GIRDER ELEVATION, SEE SH B20 AND B21.
3. ALL CONTINUITY SPLICE MATERIAL TO BE AAASHTO M270 GRADE 50W UNLESS NOTED.
4. ALL BOLTS SHALL BE 1" DIA AASHTO M164 TYPE 3, IN 1 1/16" HOLES. EXCLUDE THREADS FROM SHEAR PLANE, SEE SECTION F-F. SHOP DRILL ALL HOLES IN SPLICE PLATE AND TOP FLANGE OF ONE GIRDER SPAN. FIELD DRILL HOLES IN TOP FLANGE OF OTHER SPAN ONCE DECK HAS BEEN POURED AND CONTINUITY SPLICE PLATE IS INSTALLED.
5. THE TOP FLANGE SPLICE PLATE SHALL BE CVN (CHARPY V-NOTCH) IMPACT TESTED.
6. DO NOT INSTALL THE TOP FLANGE SPLICE PLATE AND BOTTOM FLANGE CONTINUITY STEEL BLOCK UNTIL AFTER PLACEMENT OF THE POSITIVE MOMENT REGION DECK POURS (REGION 1 FOR STAGE 1 CONSTRUCTION AND REGION 3 FOR STAGE 2 CONSTRUCTION, SEE SH B30).
7. FULL BOLT PATTERNS NOT SHOWN.
8. TERMINATE END PLATE TO WEB FILLET WELD ½" ± ⅛" FROM BOTTOM FLANGE.
9. DETAIL GIRDER ENDS AT THE PIER TO BE VERTICAL UNDER STEEL, 8" DECK AND S.I.P. FORM DEAD LOADS (DC1).

REVISION NUMBER	SHEET NUMBER	REVISION	DATE	BY

THE WEST VIRGINIA DEPARTMENT OF TRANSPORTATION
DIVISION OF HIGHWAYS

THREE SPRINGS DRIVE BRIDGE REPLACEMENT

STEEL DETAILS

HDR ENGINEERING, INC.
CONSULTING ENGINEERS
WEIRTON, WV (304) 748-8740

DESIGNED BY APR	DRAWN BY APR	CHECKED BY JWB	BRIDGE NO. 10565
DATE 06-05	DATE 06-05	DATE 08-05	SHEET NO. B23

FILE:\\ra1436\bri dgs\STRC_SUP_3SPR2.dgn

PUBLIC ROADS DIV.	STATE DIST. NO.	STATE PROJECT NO.	FEDERAL PROJECT NO.	FISCAL YEAR	COUNTY	SHEET NO.	TOTAL SHEETS
W.V.	6	U305-13 -0.02 00	BR-0013 (042)E	2006	BROOKE	97	163

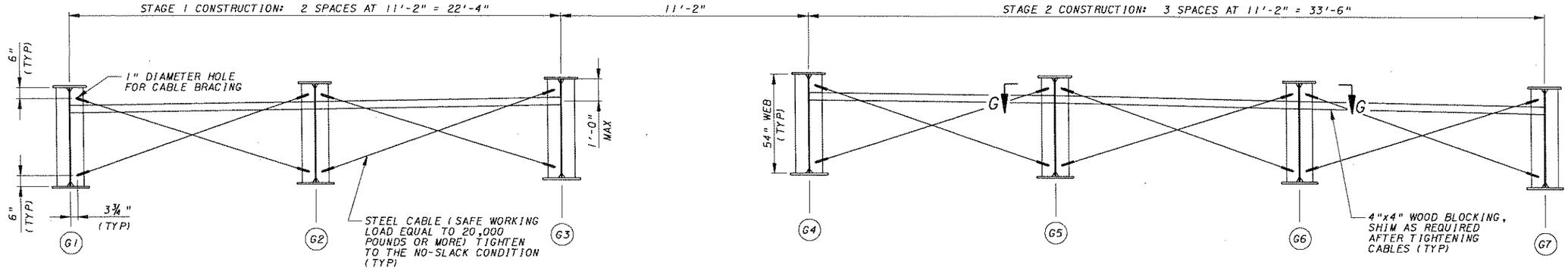

SECTION A-A - TEMPORARY BRACING AT ABUTMENTS AND PIER (SH B20)

32" 16" 0 2.66'
⅜" = 1'-0"

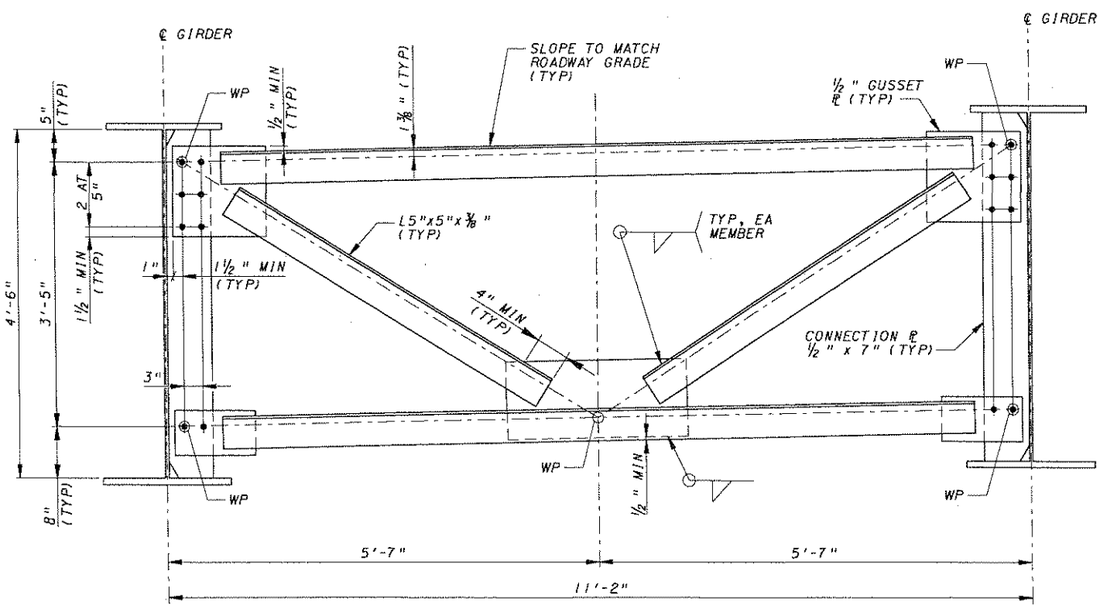

TYPICAL CROSSFRAME

12" 6" 0 1'
1" = 1'-0"

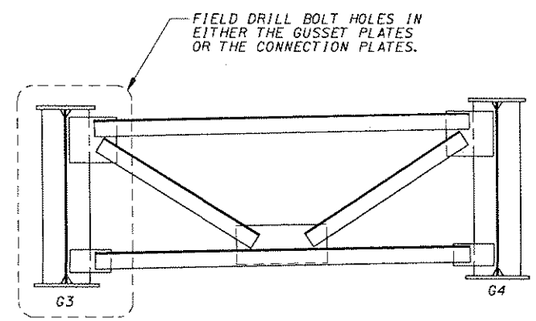

CROSSFRAMES BETWEEN G3 AND G4

NO SCALE

1. SHOP DRILL ALL CROSSFRAME CONNECTION BOLT HOLES EXCEPT BOLT HOLES IN EITHER THE GUSSET PLATES OR THE CONNECTION PLATE ON G3 SIDE.
2. PRIOR TO PLACING G3-G4 CLOSURE POUR FORMWORK, ERECT G3-G4 CROSSFRAME. INSTALL BOLTS ON G4 SIDE OF CROSSFRAME FOR SUPPORT AND ALIGNMENT.
3. FIELD DRILL REMAINING HOLES ON G3 SIDE OF CROSSFRAME. MAINTAIN MINIMUM EDGE DISTANCE FOR FIELD DRILLING.
4. TIGHTEN BOLTS.
5. POUR DECK CLOSURE POUR BETWEEN G3 AND G4.

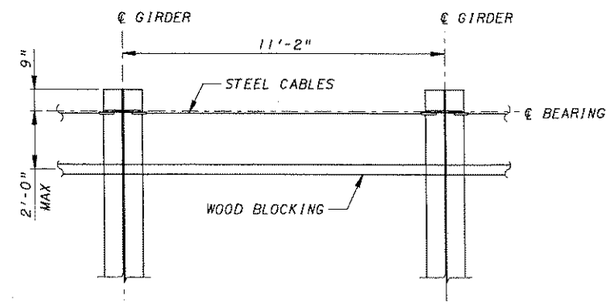

SECTION G-G

32" 16" 0 2.66'
⅜" = 1'-0"

NOTES:

1. FOR GENERAL NOTES, SEE SH B5 AND B6.
2. ALL STEEL SHALL BE GRADE 50W, UNLESS NOTED.
3. BOLTS SHALL BE ⅞" DIA AASHTO M164, TYPE 3.
4. FOR ADDITIONAL CROSSFRAME CONNECTION PLATE DETAILS, SEE SH B22.
5. REMOVE TEMPORARY BRACING PRIOR TO PLACING END POUR OF DECK/INTEGRAL ABUTMENT AND PIER CONTINUITY DIAPHRAGM.

THE WEST VIRGINIA DEPARTMENT OF TRANSPORTATION
DIVISION OF HIGHWAYS

THREE SPRINGS DRIVE BRIDGE REPLACEMENT

CROSSFRAME AND TEMPORARY BRACING DETAILS

HDR ENGINEERING, INC.
CONSULTING ENGINEERS
WEIRTON, WV (304) 748-8740

REVISION NUMBER	SHEET NUMBER	REVISION	DATE	BY

DESIGNED BY APR	DRAWN BY APR	CHECKED BY JWB	BRIDGE NO. 10565
DATE 06-05	DATE 06-05	DATE 08-05	SHEET NO. B24

FILE:\\1436\bridge\STR_SUP_3SPRN.dgn

PUBLIC ROADS DIV.	STATE DIST. NO.	STATE PROJECT NO.	FEDERAL PROJECT NO.	FISCAL YEAR	COUNTY	SHEET NO.	TOTAL SHEETS
W.V.	6	U305-13 -0.02 00	BR-0013 (042)E	2006	BROOKE	98	163

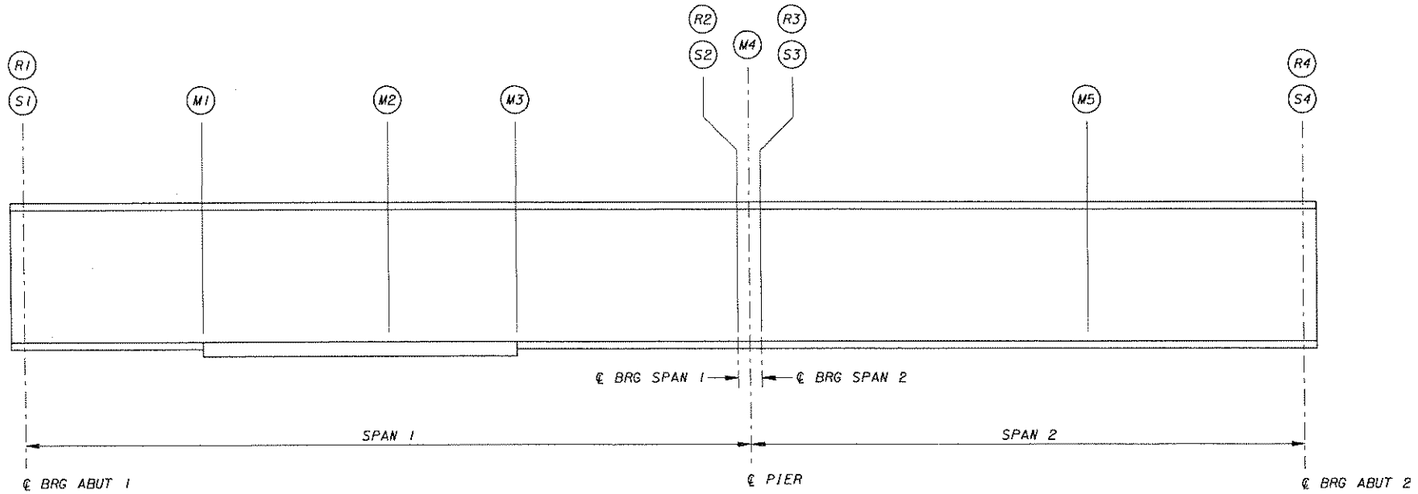

CRITICAL SECTIONS

NO SCALE

MAXIMUM MOMENT (K-FT)

GIRDER MARK	M1				M2				M3				M4				M5			
	DC1	DC2	DW	LL+I	DC1	DC2	DW	LL+I	DC1	DC2	DW	LL+I	DC1	DC2	DW	LL+I	DC1	DC2	DW	LL+I
G1	1855	329	255	2305	2484	365	282	2703	2147	203	157	1972	0	-475	-367	-2257	1328	141	109	1908
G2	2278	442	255	1983	3050	490	282	2386	2638	273	157	1697	0	-636	-367	-2010	1637	189	109	1770
G3	1849	458	255	1983	2476	507	282	2386	2141	283	157	1697	0	-660	-367	-2010	1323	196	109	1770
G4	1849	129	255	1983	2476	142	282	2386	2141	79	157	1697	0	-185	-367	-2010	1323	55	109	1770
G5	2278	112	255	1983	3050	124	282	2386	2638	69	157	1697	0	-162	-367	-2010	1637	48	109	1770
G6	2278	182	255	1983	3050	201	282	2386	2638	112	157	1697	0	-261	-367	-2010	1637	78	109	1770
G7	1855	181	255	2209	2484	201	282	2592	2147	112	157	1891	0	-262	-367	-2164	1328	78	109	1830

MAXIMUM SHEAR (KIPS)

GIRDER MARK	S1				S2				S3				S4			
	DC1	DC2	DW	LL+I	DC1	DC2	DW	LL+I	DC1	DC2	DW	LL+I	DC1	DC2	DW	LL+I
G1	79	15	12	115	-79	-23	-17	-136	59	19	15	115	-59	-9	-7	-91
G2	98	21	12	132	-97	-30	-17	-156	73	26	15	132	-73	-13	-7	-105
G3	79	21	12	132	-79	-31	-17	-156	59	27	15	132	-59	-13	-7	-105
G4	79	6	12	132	-79	-9	-17	-156	59	7	15	132	-59	-4	-7	-105
G5	98	5	12	132	-97	-8	-17	-156	73	7	15	132	-73	-3	-7	-105
G6	98	8	12	132	-97	-12	-17	-156	73	11	15	132	-73	-5	-7	-105
G7	79	8	12	110	-79	-12	-17	-131	59	11	15	110	-59	-5	-7	-88

MAXIMUM REACTION (KIPS)

GIRDER MARK	R1				R2				R3				R4			
	DC1	DC2	DW	LL+I	DC1	DC2*	DW*	LL+I*	DC1	DC2*	DW*	LL+I*	DC1	DC2	DW	LL+I
G1	79	15	12	115	79	21	16	100	59	21	16	100	59	10	7	91
G2	98	21	12	132	98	29	16	115	73	29	16	115	73	13	7	105
G3	79	21	12	132	79	30	16	115	59	30	16	115	59	13	7	105
G4	79	6	12	132	79	8	16	115	59	8	16	115	59	4	7	105
G5	98	5	12	132	98	7	16	115	73	7	16	115	73	3	7	105
G6	98	9	12	132	98	12	16	115	73	12	16	115	73	5	7	105
G7	79	9	12	110	79	12	16	96	59	12	16	96	59	5	7	88

* NOTE: CONTINUOUS DEAD LOAD (DC2, DW) AND LIVE LOAD PLUS IMPACT REACTIONS AT EACH PIER BEARING LOCATION ARE CALCULATED AS ONE HALF OF THE TOTAL GIRDER REACTION AT THE PIER.

LEGEND:

DC1 = STEEL + 8" DECK WEIGHT (NON-COMPOSITE) + STAY-IN-PLACE FORMS

DC2 = BARRIERS, SIDEWALK, CLOSURE POUR AND RAILING (3N - COMPOSITE SECTION)

DW = FUTURE WEARING SURFACE (3N - COMPOSITE SECTION)

LL+I = LIVE LOAD + IMPACT, HL-93 (N - COMPOSITE SECTION)

NOTES:

1. FOR GENERAL NOTES, SEE SH B5 AND B6.
2. FOR GIRDER ELEVATION, SEE SH B21.
3. TABULATED MOMENTS, SHEARS, AND REACTIONS WERE OBTAINED USING A LINE GIRDER ANALYSIS.
4. LL+I MOMENTS, SHEARS AND REACTIONS WERE CALCULATED WITH DISTRIBUTION FACTORS BASED ON THE AASHTO SIMPLIFIED METHOD.
5. VALUES SHOWN IN TABLES ARE UNFACTORED.

THE WEST VIRGINIA DEPARTMENT OF TRANSPORTATION
DIVISION OF HIGHWAYS

THREE SPRINGS DRIVE BRIDGE REPLACEMENT

STRESS TABLES

REVISION NUMBER	SHEET NUMBER	REVISION	DATE	BY

HDR ENGINEERING, INC.
CONSULTING ENGINEERS
WEIRTON, WV (304) 748-8740

DESIGNED BY JWB	DRAWN BY BJS	CHECKED BY APR	BRIDGE NO. 10565
DATE 06-05	DATE 06-05	DATE 08-05	SHEET NO. B25

FILE:\\1438\bridges\STHree_R_35PR1.DGN

PUBLIC ROADS DIV.	STATE DIST. NO.	STATE PROJECT NO.	FEDERAL PROJECT NO.	FISCAL YEAR	COUNTY	SHEET NO.	TOTAL SHEETS
W.V.	6	U305-13 -0.02 00	BR-0013 (042)E	2006	BROOKE	99	163

CAMBER ORDINATES = "Y" IN INCHES

GIRDER MARK	CAMBER	SPAN 1									SPAN 2								
		1.10	1.20	1.30	1.40	1.50	1.60	1.70	1.80	1.90	2.10	2.20	2.30	2.40	2.50	2.60	2.70	2.80	2.90
G1	A	0.39	0.73	0.99	1.15	1.21	1.16	1.00	0.74	0.39	0.15	0.28	0.38	0.44	0.46	0.44	0.38	0.28	0.15
	B	1.55	2.92	3.96	4.62	4.85	4.64	4.01	2.96	1.57	0.58	1.10	1.51	1.76	1.85	1.76	1.51	1.10	0.58
	C	0.16	0.30	0.40	0.45	0.45	0.40	0.31	0.20	0.09	-0.02	0.00	0.02	0.05	0.07	0.08	0.08	0.06	0.04
	D	1.44	2.70	3.60	4.14	4.34	4.18	3.66	2.79	1.57	0.90	1.59	2.09	2.38	2.48	2.37	2.06	1.54	0.83
	E	3.54	6.65	8.95	10.36	10.85	10.38	8.98	6.69	3.62	1.61	2.97	4.00	4.63	4.86	4.65	4.03	2.98	1.60
G2	A	0.41	0.77	1.04	1.21	1.27	1.22	1.05	0.78	0.41	0.15	0.29	0.40	0.46	0.49	0.46	0.40	0.29	0.15
	B	1.98	3.72	5.04	5.87	6.17	5.91	5.10	3.76	2.00	0.74	1.41	1.92	2.25	2.36	2.25	1.92	1.41	0.74
	C	0.21	0.38	0.50	0.56	0.56	0.50	0.39	0.26	0.11	-0.02	0.00	0.03	0.06	0.09	0.10	0.10	0.08	0.04
	D	1.44	2.70	3.60	4.14	4.34	4.18	3.66	2.79	1.57	0.90	1.59	2.09	2.38	2.48	2.37	2.06	1.54	0.83
	E	4.04	7.57	10.18	11.78	12.34	11.81	10.20	7.59	4.09	1.77	3.29	4.44	5.15	5.42	5.18	4.48	3.32	1.76
G3	A	0.39	0.73	0.99	1.15	1.21	1.16	1.00	0.74	0.39	0.15	0.27	0.38	0.44	0.46	0.44	0.38	0.27	0.15
	B	1.55	2.91	3.94	4.60	4.83	4.63	3.99	2.95	1.57	0.58	1.10	1.50	1.76	1.84	1.76	1.50	1.10	0.58
	C	0.21	0.39	0.52	0.58	0.58	0.52	0.41	0.27	0.12	-0.02	0.00	0.03	0.06	0.09	0.10	0.10	0.08	0.05
	D	1.44	2.70	3.60	4.14	4.34	4.18	3.66	2.79	1.57	0.90	1.59	2.09	2.38	2.48	2.37	2.06	1.54	0.83
	E	3.59	6.73	9.05	10.47	10.96	10.49	9.06	6.75	3.65	1.61	2.96	4.00	4.64	4.87	4.67	4.04	2.99	1.61
G4	A	0.39	0.73	0.99	1.15	1.21	1.16	1.00	0.74	0.39	0.15	0.27	0.38	0.44	0.46	0.44	0.38	0.27	0.15
	B	1.55	2.91	3.94	4.60	4.83	4.63	3.99	2.95	1.57	0.58	1.10	1.50	1.76	1.84	1.76	1.50	1.10	0.58
	C	0.06	0.11	0.15	0.16	0.16	0.15	0.12	0.07	0.03	-0.01	0.00	0.01	0.02	0.03	0.03	0.03	0.02	0.01
	D	1.44	2.70	3.60	4.14	4.34	4.18	3.66	2.79	1.57	0.90	1.59	2.09	2.38	2.48	2.37	2.06	1.54	0.83
	E	3.44	6.45	8.68	10.05	10.54	10.12	8.77	6.55	3.56	1.62	2.96	3.98	4.60	4.81	4.60	3.97	2.93	1.57
G5	A	0.41	0.77	1.04	1.21	1.27	1.22	1.05	0.78	0.41	0.15	0.29	0.40	0.46	0.49	0.46	0.40	0.29	0.15
	B	1.98	3.72	5.04	5.87	6.17	5.91	5.10	3.76	2.00	0.74	1.41	1.92	2.25	2.36	2.25	1.92	1.41	0.74
	C	0.05	0.10	0.13	0.14	0.14	0.13	0.10	0.07	0.03	-0.01	0.00	0.01	0.02	0.02	0.03	0.03	0.02	0.01
	D	1.44	2.70	3.60	4.14	4.34	4.18	3.66	2.79	1.57	0.90	1.59	2.09	2.38	2.48	2.37	2.06	1.54	0.83
	E	3.88	7.29	9.81	11.36	11.92	11.44	9.91	7.40	4.01	1.78	3.29	4.42	5.11	5.35	5.11	4.41	3.26	1.73
G6	A	0.41	0.77	1.04	1.21	1.27	1.22	1.05	0.78	0.41	0.15	0.29	0.40	0.46	0.49	0.46	0.40	0.29	0.15
	B	1.98	3.72	5.04	5.87	6.17	5.91	5.10	3.76	2.00	0.74	1.41	1.92	2.25	2.36	2.25	1.92	1.41	0.74
	C	0.09	0.16	0.20	0.23	0.23	0.21	0.16	0.11	0.05	-0.01	0.00	0.01	0.03	0.04	0.04	0.04	0.03	0.02
	D	1.44	2.70	3.60	4.14	4.34	4.18	3.66	2.79	1.57	0.90	1.59	2.09	2.38	2.48	2.37	2.06	1.54	0.83
	E	3.92	7.35	9.88	11.45	12.01	11.52	9.97	7.44	4.03	1.78	3.29	4.42	5.12	5.37	5.12	4.42	3.27	1.74
G7	A	0.39	0.73	0.99	1.15	1.21	1.16	1.00	0.74	0.39	0.15	0.28	0.38	0.44	0.46	0.44	0.38	0.28	0.15
	B	1.55	2.92	3.96	4.62	4.85	4.64	4.01	2.96	1.57	0.58	1.10	1.51	1.76	1.85	1.76	1.51	1.10	0.58
	C	0.09	0.17	0.22	0.25	0.25	0.22	0.17	0.11	0.05	-0.01	0.00	0.01	0.03	0.04	0.04	0.04	0.03	0.02
	D	1.44	2.70	3.60	4.14	4.34	4.18	3.66	2.79	1.57	0.90	1.59	2.09	2.38	2.48	2.37	2.06	1.54	0.83
	E	3.47	6.52	8.77	10.16	10.65	10.20	8.84	6.60	3.58	1.62	2.97	3.99	4.61	4.83	4.61	3.99	2.95	1.58

CAMBER ORDINATES LEGEND:

A - CAMBER DUE TO DEAD LOAD OF STEEL

B - CAMBER DUE TO DEAD LOAD OF 8" DECK CONCRETE AND STAY-IN-PLACE FORMS.

C - CAMBER DUE TO SUPERIMPOSED DEAD LOAD OF CONCRETE BARRIER, SIDEWALK, CLOSURE POUR AND RAILING.

D - GEOMETRIC CAMBER.

E - TOTAL CAMBER (A+B+C+D).

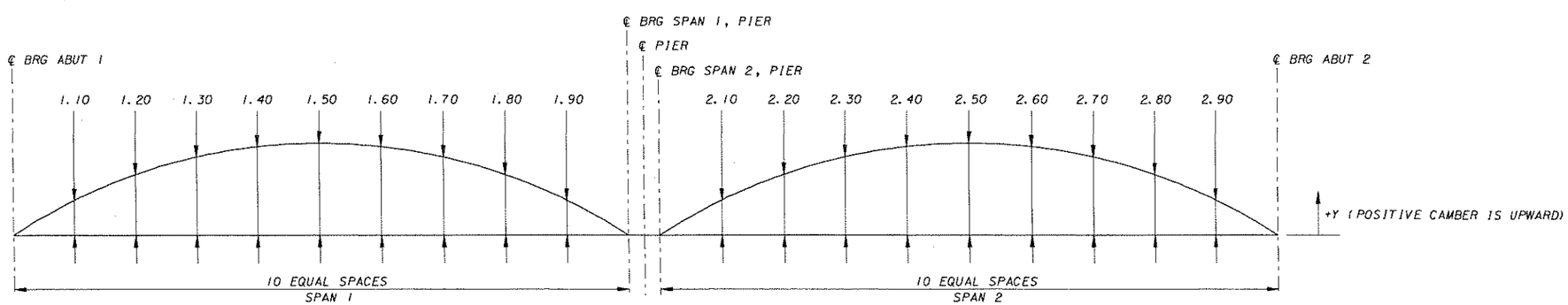

GIRDER CAMBER DIAGRAM

NO SCALE

NOTES:

1. FOR GENERAL NOTES, SEE SH B5 AND B6.
2. FOR GIRDER ELEVATION, SEE SH B21.

THE WEST VIRGINIA DEPARTMENT OF TRANSPORTATION
DIVISION OF HIGHWAYS

THREE SPRINGS DRIVE BRIDGE REPLACEMENT

CAMBER TABLE

HDR ENGINEERING, INC.
CONSULTING ENGINEERS
WEIRTON, WV (304) 748-8740

REVISION NUMBER	SHEET NUMBER	REVISION	DATE	BY

DESIGNED BY ANC DATE 06-05 | DRAWN BY BJS DATE 06-05 | CHECKED BY RTH DATE 07-05 | BRIDGE NO. 10565 | SHEET NO. B26

FILE=X:\1436\Bridge\STR_DAE_3SPR1.DGN

PUBLIC ROADS DIV.	STATE DIST. NO.	STATE PROJECT NO.	FEDERAL PROJECT NO.	FISCAL YEAR	COUNTY	SHEET NO.	TOTAL SHEETS
W.V.	6	U305-13 -0.02 00	BR-0013 (042)E	2006	BROOKE	100	163

BEARING DATA TABLE

LOCATION	GIRDER MARK	BEARING TYPE	BEARING DESIGN LOADS (KIPS) - SERVICE LOADS						DESIGN MOVEMENT (IN)		LONGITUDINAL SLOPE, BOTTOM OF GIRDER FLANGE (%)	DESIGN ROTATION (RADIANS)	ELEVATION AT BOTTOM OF GIRDER BOTTOM FLANGE (FT)	BEARING HEIGHT (IN)	ELEVATION AT TOP OF CONCRETE (FT)
			VERTICAL				HORIZONTAL (C)		LONGITUDINAL (D)						
			MAX DL (E)	MIN DL (F)	LL	TOTAL (G)	TRANS	LONG	TEMP FALL	TEMP RISE					
ABUTMENT 1	G1	(A)	106	94	(B)	106	-	-	0.26	0.26	+2.80	0.003	1149.028	1.114	1148.935
	G2		131	119		131	-	-	0.26	0.26	+2.80	0.003	1149.194	1.114	1149.101
	G3		112	100		112	-	-	0.26	0.26	+2.80	0.003	1149.418	1.114	1149.325
	G4		97	85		97	-	-	0.26	0.26	+2.80	0.003	1149.642	1.114	1149.549
	G5		115	103		115	-	-	0.26	0.26	+2.80	0.003	1149.512	1.114	1149.419
	G6		119	107		119	-	-	0.26	0.26	+2.80	0.003	1149.288	1.114	1149.195
	G7		100	88		100	-	-	0.26	0.26	+2.80	0.003	1149.065	1.114	1148.972
PIER SPAN 1	G1	(A)	116	100	84	200	59	59	-	-	+0.64	0.008	1151.317	3.093	1151.059
	G2		143	127	96	239	59	59	-	-	+0.64	0.008	1151.483	3.093	1151.225
	G3		125	109	96	221	59	59	-	-	+0.64	0.008	1151.707	3.093	1151.449
	G4		103	87	96	199	59	59	-	-	+0.64	0.008	1151.930	3.093	1151.672
	G5		121	105	96	217	59	59	-	-	+0.64	0.008	1151.800	3.093	1151.542
	G6		126	110	96	222	59	59	-	-	+0.64	0.008	1151.577	3.093	1151.319
	G7		107	91	80	187	59	59	-	-	+0.64	0.008	1151.353	3.093	1151.095
PIER SPAN 2	G1	(A)	96	80	84	180	59	59	-	-	+0.64	0.008	1151.317	3.093	1151.059
	G2		118	102	96	214	59	59	-	-	+0.64	0.008	1151.483	3.093	1151.225
	G3		105	89	96	201	59	59	-	-	+0.64	0.008	1151.707	3.093	1151.449
	G4		83	67	96	179	59	59	-	-	+0.64	0.008	1151.930	3.093	1151.672
	G5		96	80	96	192	59	59	-	-	+0.64	0.008	1151.800	3.093	1151.542
	G6		101	85	96	197	59	59	-	-	+0.64	0.008	1151.577	3.093	1151.319
	G7		87	71	80	167	59	59	-	-	+0.64	0.008	1151.353	3.093	1151.095
ABUTMENT 2	G1	(A)	76	69	(B)	76	-	-	0.26	0.26	-1.00	0.003	1151.076	1.114	1150.983
	G2		93	86		93	-	-	0.26	0.26	-1.00	0.003	1151.243	1.114	1151.150
	G3		79	72		79	-	-	0.26	0.26	-1.00	0.003	1151.466	1.114	1151.373
	G4		70	63		70	-	-	0.26	0.26	-1.00	0.003	1151.690	1.114	1151.597
	G5		83	76		83	-	-	0.26	0.26	-1.00	0.003	1151.560	1.114	1151.467
	G6		85	78		85	-	-	0.26	0.26	-1.00	0.003	1151.336	1.114	1151.243
	G7		71	64		71	-	-	0.26	0.26	-1.00	0.003	1151.113	1.114	1151.020

(A) REINFORCED ELASTOMERIC PADS AT ABUTMENTS AND PIER. (NON-GUIDED)
(B) ABUTMENT BEARINGS SUBJECT TO LOADS UNTIL PLACEMENT OF BACKWALL CONCRETE, THEREFORE LIVE LOAD NOT APPLICABLE.
(C) MAXIMUM SEISMIC LOAD (AASHTO EXT-1) GOVERNS AT PIER. ALL LOADS RESISTED BY EP601 DOWELS, SEE SHEET B18.
(D) TEMPERATURE RANGE, ΔT, DURING CONSTRUCTION OF ABUTMENTS ASSUMED TO BE ± 30°F.
(E) MAX DL = DC1 + DC2 + DW
(F) MIN DL = DC1 + DC2
(G) TOTAL = MAX DL + LL

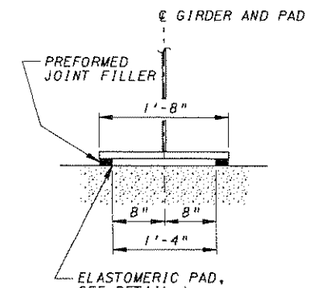

SECTION H-H

NO SCALE

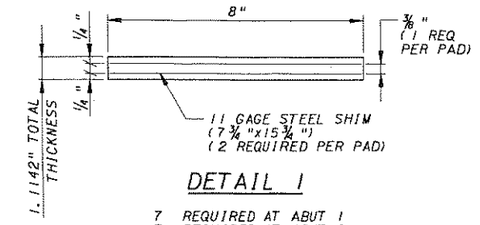

DETAIL 1

7 REQUIRED AT ABUT 1
7 REQUIRED AT ABUT 2
14 TOTAL REQUIRED

NO SCALE

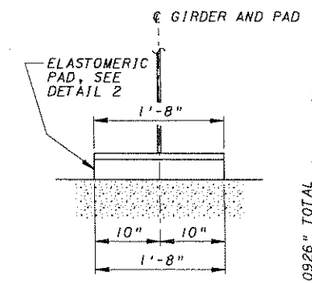

SECTION K-K

NO SCALE

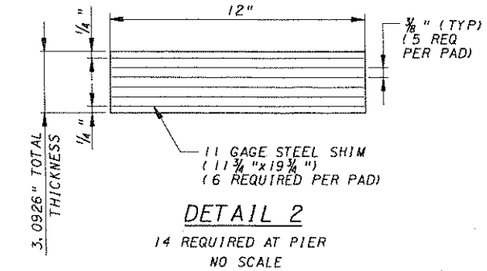

DETAIL 2

14 REQUIRED AT PIER

NO SCALE

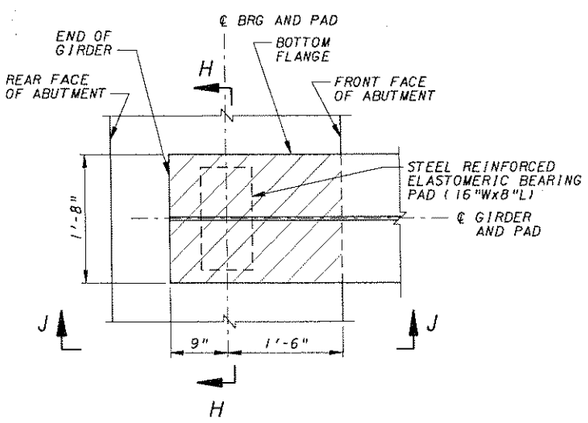

BEARING DETAILS AT ABUTMENTS

NOTE: HATCHED AREA OF BRIDGE SEAT TO BE CONSTRUCTED PARALLEL TO BEAM GRADE (SEE BEARING TABLE FOR SLOPE)

NO SCALE

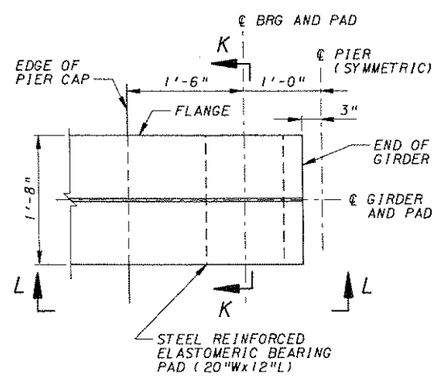

BEARING DETAILS AT PIER

NO SCALE

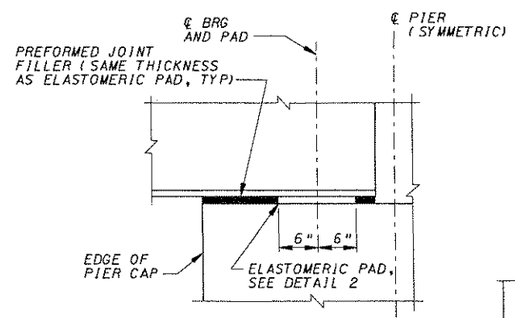

SECTION L-L

NO SCALE

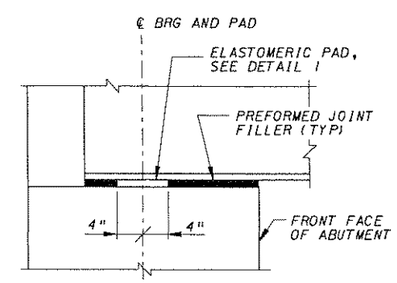

SECTION J-J

NO SCALE

NOTES:

1. FOR GENERAL NOTES, SEE SH B5 AND B6.
2. ELASTOMERIC PAD TO BE 50 DUROMETER HARDNESS.
3. THE ROTATIONS INDICATED IN THE BEARING DATA TABLE INCLUDE BOTH DEAD AND LIVE LOAD ROTATIONS AT THE PIER AND DEAD LOAD ONLY AT THE ABUTMENTS.

THE WEST VIRGINIA DEPARTMENT OF TRANSPORTATION
DIVISION OF HIGHWAYS

THREE SPRINGS DRIVE BRIDGE REPLACEMENT

BEARING DETAILS

REVISION NUMBER	SHEET NUMBER	REVISION	DATE	BY

HDR ENGINEERING, INC.
CONSULTING ENGINEERS
WEIRTON, WV (304) 748-8740

DESIGNED BY APR	DRAWN BY APR	CHECKED BY JWB	BRIDGE NO. 10565
DATE 07-05	DATE 07-05	DATE 08-05	SHEET NO. B27

FILE:X:\1436\bridge\STR_BRG_3SPR1.dgn

PUBLIC ROADS DIV.	STATE DIST. NO.	STATE PROJECT NO.	FEDERAL PROJECT NO.	FISCAL YEAR	COUNTY	SHEET NO.	TOTAL SHEETS
W.V.	6	U305-13 -0.02 00	BR-0013 (042)E	2006	BROOKE	101	163

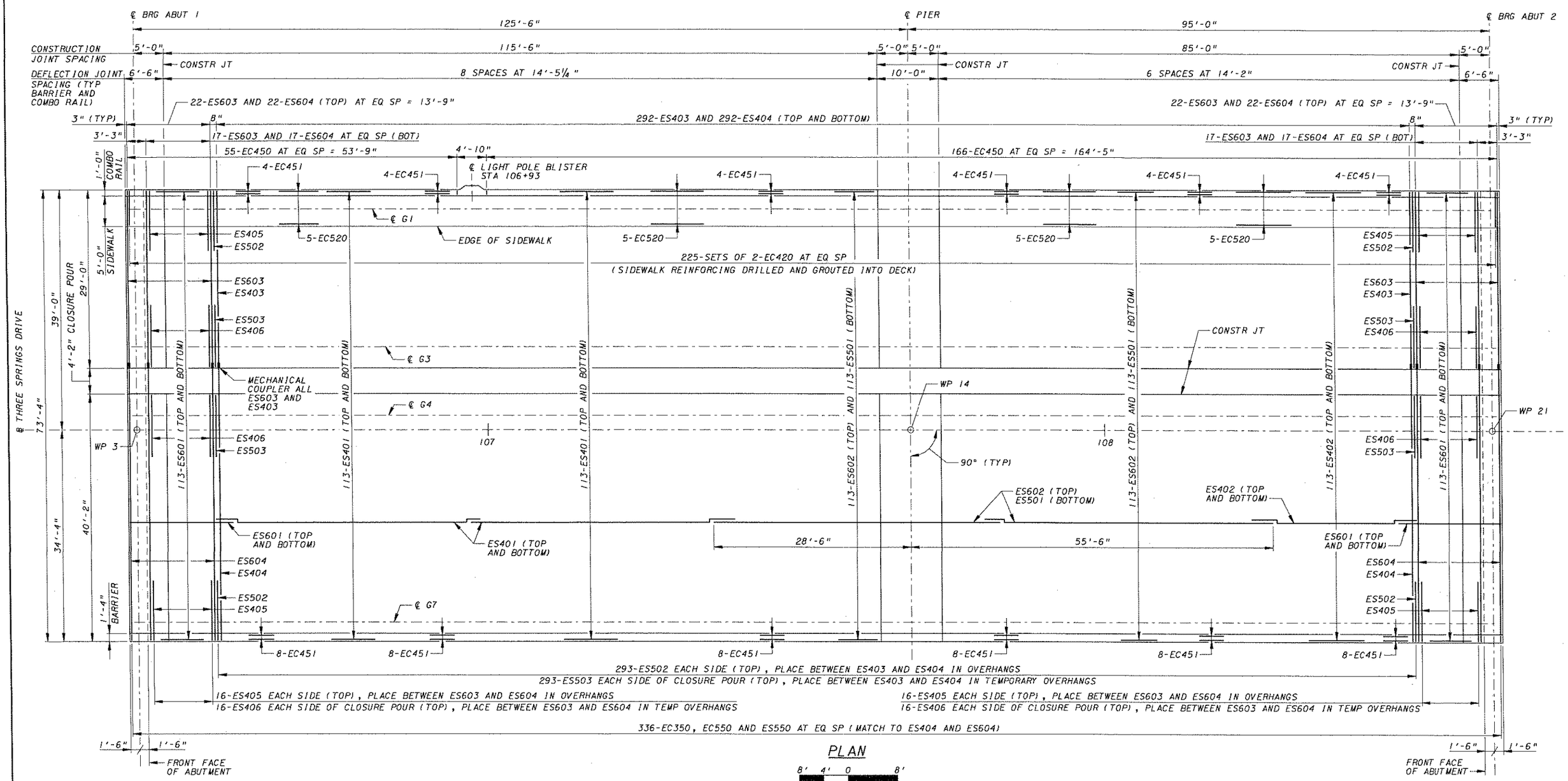

PLAN

8' 4' 0 8'

1/8" = 1'-0"

NOTES:

1. FOR GENERAL NOTES, SEE SH B5 AND B6.
2. FOR DECK SECTION, SEE SH B29.
3. FOR DECK REINFORCING BAR SCHEDULE, SEE SH B33.
4. FOR DECK PLACEMENT SEQUENCE, SEE SH B30.
5. ALL REINFORCING BARS IN THE DECK, BARRIER AND COMBO RAIL TO BE EPOXY COATED.
6. FOR ADDITIONAL REINFORCING AT THE DECK/INTEGRAL ABUTMENT INTERFACE, SEE SH B30.
7. FOR ADDITIONAL REINFORCING AT THE DECK/PIER INTERFACE, SEE SH B18.
8. THE COST OF DRILLING AND GROUTING SIDEWALK REINFORCEMENT IS INCIDENTAL TO ITEM 602002-001 "EPOXY COATED REINFORCING STEEL BAR".
9. NO CONSTRUCTION EQUIPMENT WITH AN AXLE LOAD GREATER THAN 20 KIPS SHALL BE PERMITTED ON THE SLAB AT ANY TIME.
10. NO CONSTRUCTION EQUIPMENT OR LOADS THAT ARE NOT REQUIRED TO COMPLETE THE SLAB, BARRIERS, RAILING, LIGHTING, OR OTHER APPURTENANCES SHALL BE ALLOWED ON THE BRIDGE DECK.
11. FOR DECK QUANTITIES, SEE SHEET B29.

MINIMUM LAP LENGTHS

DECK BAR LAPS

#4 = 2'-2"
#5 = 2'-7"
#6 = 3'-2"

BARRIER AND RAILING BAR LAPS

#4 = 3'-1"

REVISION NUMBER	SHEET NUMBER	REVISION	DATE	BY

THE WEST VIRGINIA DEPARTMENT OF TRANSPORTATION
DIVISION OF HIGHWAYS

THREE SPRINGS DRIVE BRIDGE REPLACEMENT

DECK PAVING PLAN

HDR ENGINEERING, INC.
CONSULTING ENGINEERS
WEIRTON, WV (304) 748-8740

DESIGNED BY APR	DRAWN BY APR	CHECKED BY WFB	BRIDGE NO. 10565
DATE 11-05	DATE 11-05	DATE 11-05	SHEET NO. B28

FILE:H:\1436\bridge\STRUCTL\B_3SPRI.dgn

PUBLIC ROADS DIV.	STATE DIST. NO.	STATE PROJECT NO.	FEDERAL PROJECT NO.	FISCAL YEAR	COUNTY	SHEET NO.	TOTAL SHEETS
W.V.	6	U305-13 -0.02 00	BR-0013 (042)E	2006	BROOKE	102	163

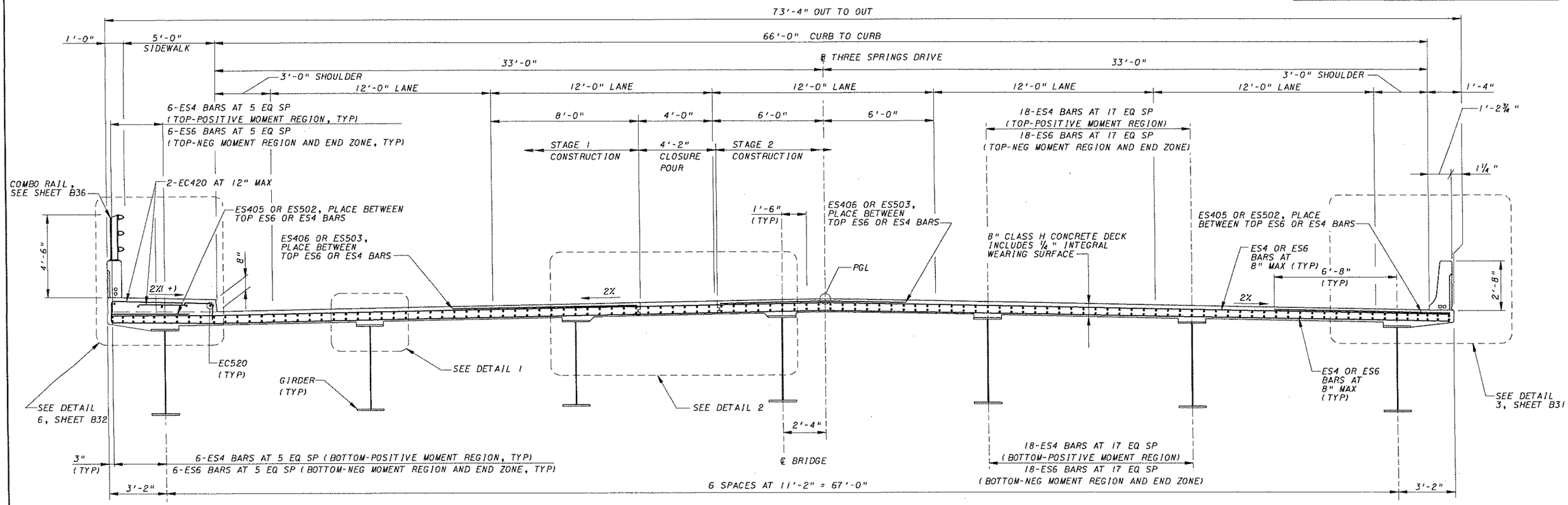

TYPICAL DECK SECTION

(LOOKING AHEAD ON STATION)

32" 16" 0 2.66'

⅛" = 1'-0"

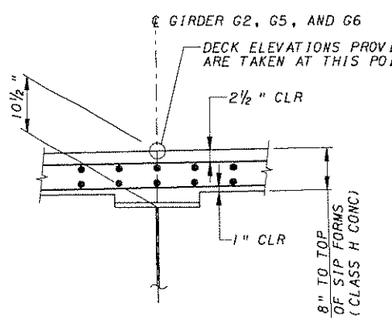

DETAIL 1

NO SCALE

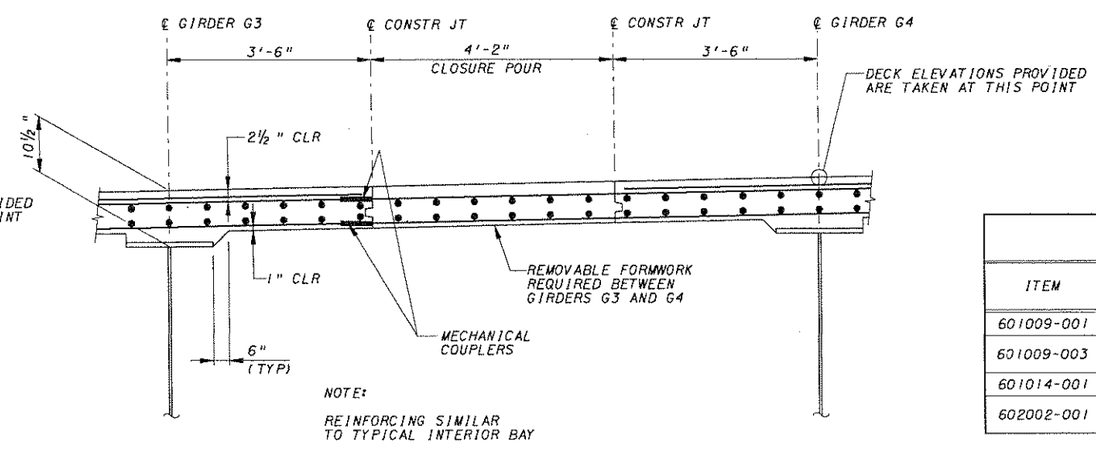

NOTE:

REINFORCING SIMILAR TO TYPICAL INTERIOR BAY

DETAIL 2

NO SCALE

QUANTITIES - DECK

ITEM	DESCRIPTION	UNIT	QUANTITY
601009-001	CLASS H CONCRETE	CY	487
601009-003	CLASS H CONCRETE, ARCHITECTURAL	CY	32
601014-001	TEST SLAB	LS	1
602002-001	EPOXY COATED REINFORCING STEEL BAR	LB	113,826

NOTES:

1. FOR GENERAL NOTES, SEE SH B5 AND B6.
2. FOR DECK PLAN, SEE SH B28.
3. FOR DECK REINFORCING BAR SCHEDULE, SEE SH B33.
4. ALL REINFORCING BARS IN DECK, SIDEWALK, BARRIER, AND COMBO RAILING TO BE EPOXY COATED.
5. FOR TABLE OF DECK ELEVATIONS, SEE SH B34 AND B35.

THE WEST VIRGINIA DEPARTMENT OF TRANSPORTATION
DIVISION OF HIGHWAYS

THREE SPRINGS DRIVE BRIDGE REPLACEMENT

TYPICAL DECK CROSS SECTION

REVISION NUMBER	SHEET NUMBER	REVISION	DATE	BY

HDR ENGINEERING, INC.
CONSULTING ENGINEERS
WEIRTON, WV (304) 748-8740

DESIGNED BY JWB	DRAWN BY JWB	CHECKED BY APR	BRIDGE NO. 10565
DATE 06-05	DATE 06-05	DATE 08-05	SHEET NO. B29

FILE:n:\1436\bridge\STR_sB_3SPR2.dgn

PUBLIC ROADS DIV.	STATE DIST. NO.	STATE PROJECT NO.	FEDERAL PROJECT NO.	FISCAL YEAR	COUNTY	SHEET NO.	TOTAL SHEETS
W.V.	6	U305-13-0.02 00	BR-0013 (042)E	2006	BROOKE	103	163

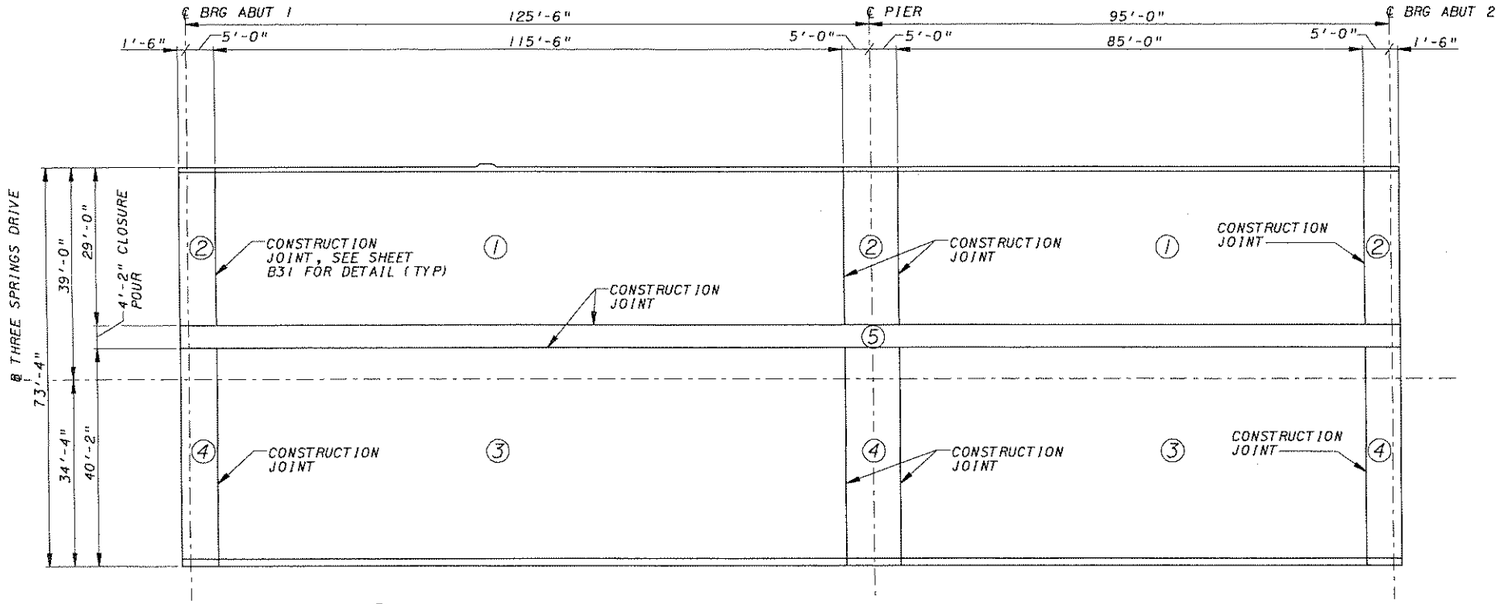

(X) - INDICATED PLACEMENT SEQUENCE

DECK PLACEMENT SEQUENCE

NO SCALE

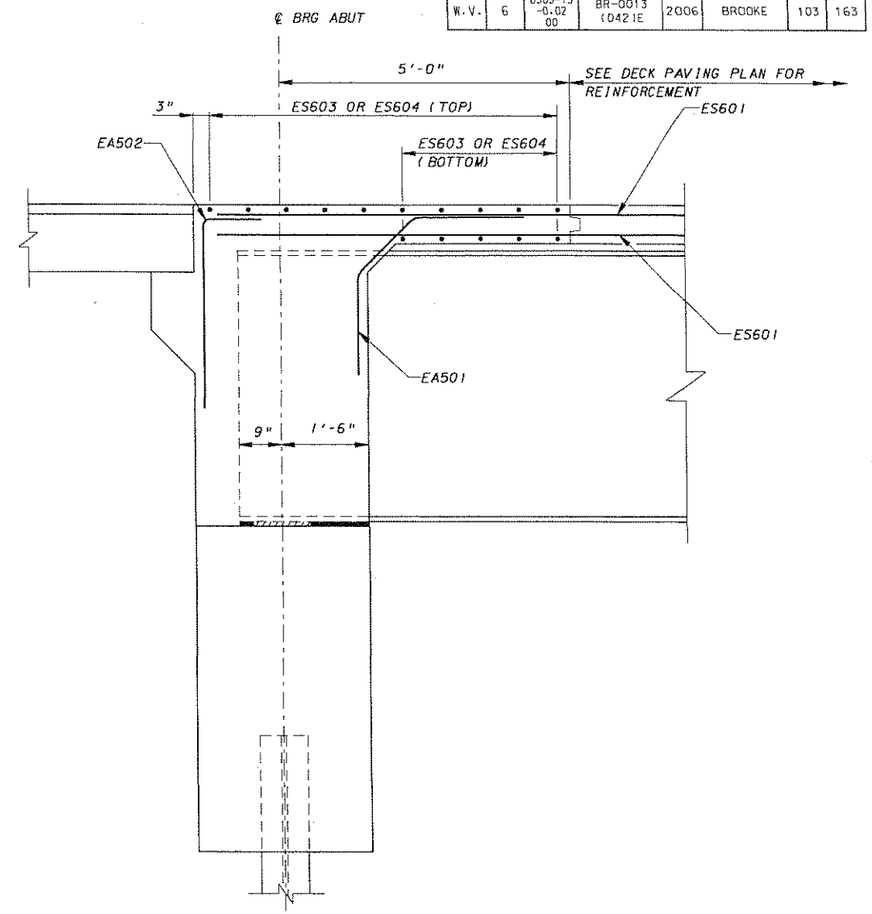

SECTION AT ABUTMENT

16" 8" 0 1.33'

¾" = 1'-0"

DECK PLACMENT NOTES:

1. CONCRETE IN THE PRECEEDING POUR MUST OBTAIN A COMPRESSIVE STRENGTH OF 2000 PSI BEFORE CONCRETE MAY BE PLACED IN THE SUCCEEDING POUR.
2. THE DECK SLAB CONCRETE FOR THE CONTINUITY CONNECTIONS AT THE ABUTMENTS AND PIER SHALL BE PLACED AND COMPLETED AT LEAST FOUR HOURS BEFORE THE PEAK AMBIENT TEMPERATURE OF THE CONCRETE PLACEMENT DAY. AMBIENT TEMPERATURE DURING THIS CONCRETE PLACEMENT SHALL BE BETWEEN 20°F AND 80°F.
3. THE PORTION OF POUR 5 ABOVE THE INTEGRAL ABUMENT BACKWALLS AND ABOVE THE PIER CONTINUITY DIAPHRAGM MAY BE PLACED WITH THE INTEGRAL ABUTMENT BACKWALLS AND THE PIER CONTINUITY DIAPHRAGM AT THE CONTRACTOR'S OPTION.

NOTES:

1. FOR GENERAL NOTES, SEE SH B5 AND B6.
2. FOR DECK PAVING PLAN, SEE SH B28.
3. FOR TYPICAL DECK SECTION, SEE SH B29.

REVISION NUMBER	SHEET NUMBER	REVISION	DATE	BY

THE WEST VIRGINIA DEPARTMENT OF TRANSPORTATION
DIVISION OF HIGHWAYS

THREE SPRINGS DRIVE BRIDGE REPLACEMENT

TYPICAL DECK DETAILS

HDR ENGINEERING, INC.
CONSULTING ENGINEERS
WEIRTON, WV (304) 748-8740

DESIGNED BY JWB	DRAWN BY JWB	CHECKED BY APR	BRIDGE NO. 10565
DATE 06-05	DATE 06-05	DATE 08-05	SHEET NO. B30

FILE:X:\1436\0\01d09\STR_SI&_3SPR3.dgn

PUBLIC ROADS DIV.	STATE DIST. NO.	STATE PROJECT NO.	FEDERAL PROJECT NO.	FISCAL YEAR	COUNTY	SHEET NO.	TOTAL SHEETS
W.V.	6	U305-13 -0.02 00	BR-0013 (042)E	2006	BROOKE	104	163

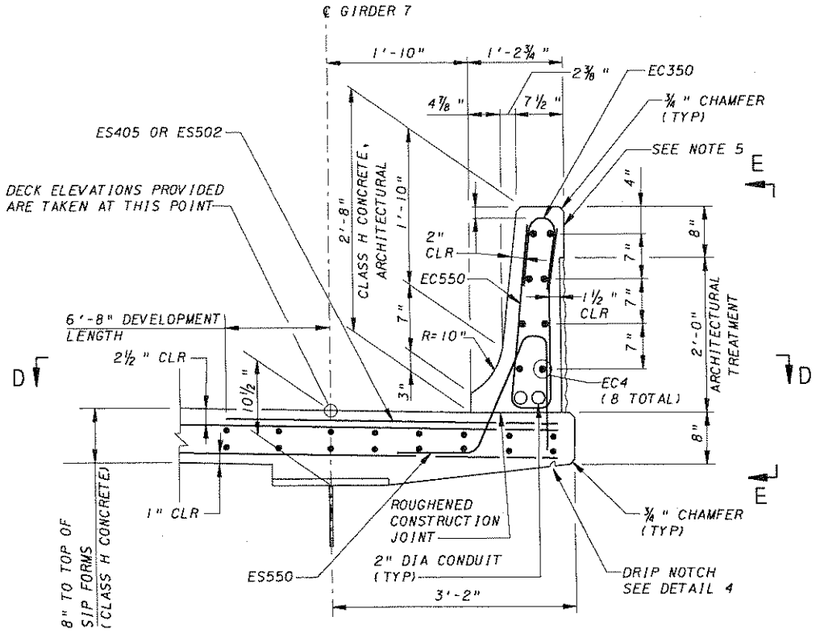

DETAIL 3 (SH B29)

12" 6" 0 1'

1" = 1'-0"

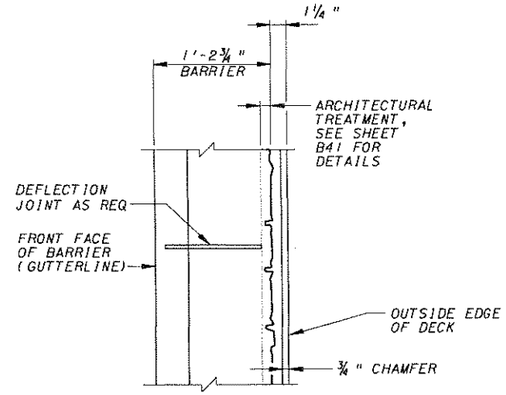

SECTION D-D

NO SCALE

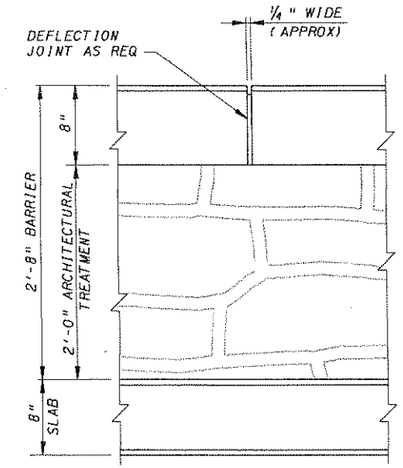

VIEW E-E

NO SCALE

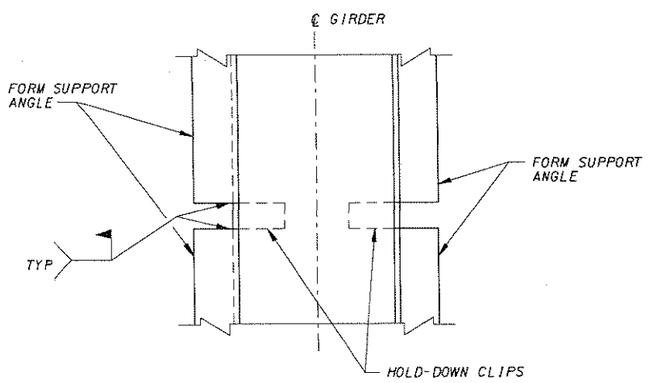

PLAN STEEL GIRDER

NO SCALE

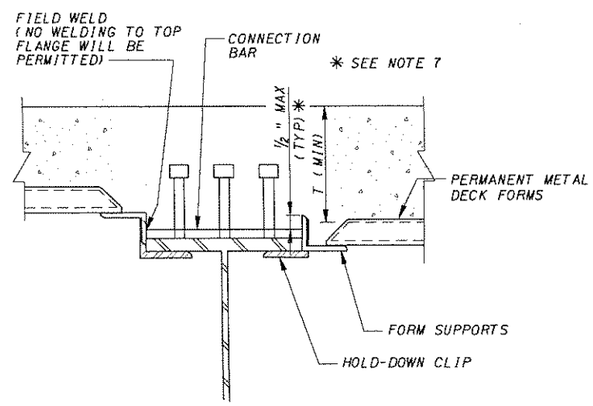

ELEVATION STEEL GIRDER

NO SCALE

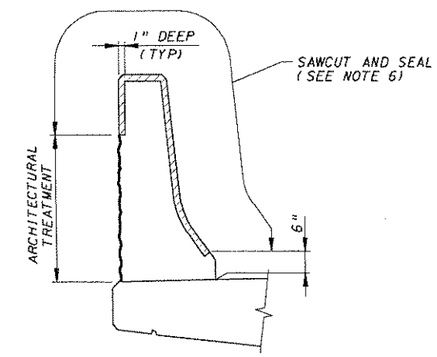

DEFLECTION JOINT DETAIL

(SPACE AS SHOWN ON DECK PAVING PLAN)

NO SCALE

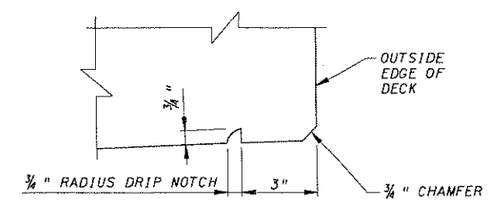

DETAIL 4

NO SCALE

NOTES:

1. FOR GENERAL NOTES, SEE SH B5 AND B6.
2. FOR DECK PAVING PLAN, SEE SH B28.
3. FOR TYPICAL DECK CROSS SECTION AND DETAILS, SEE SH B29.
4. FOR REINFORCING BAR SCHEDULE, SEE SH B33.
5. BARRIER SHALL BE CONSTRUCTED PLUMB.
6. SEAL JOINT WITH A POLYURETHANE OR POLYMERIC MATERIAL CONFORMING TO ASTM C920, TYPE S. INCLUDE PAYMENT IN ITEM 601009-003.
7. THE FORM SUPPORTS SHALL NOT PROTRUDE INTO THE DECK MORE THAN ½" ABOVE THE TOP OF THE CONNECTION BAR OR PRECAST INSERT.

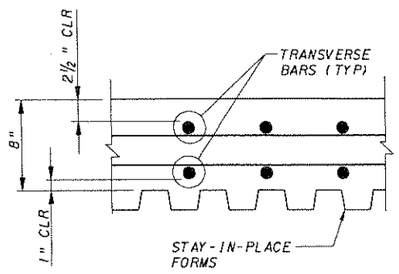

STAY-IN-PLACE FORM DETAIL

NO SCALE

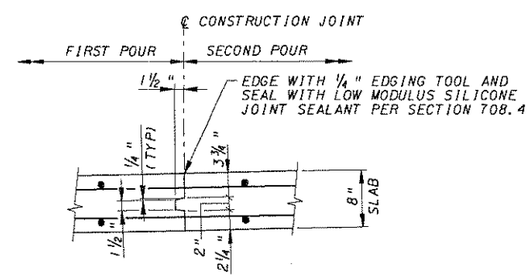

CONSTRUCTION JOINT DETAIL

NO SCALE

THE WEST VIRGINIA DEPARTMENT OF TRANSPORTATION
DIVISION OF HIGHWAYS

THREE SPRINGS DRIVE BRIDGE REPLACEMENT

TYPICAL DECK DETAILS

HDR ENGINEERING, INC.
CONSULTING ENGINEERS
WEIRTON, WV (304) 748-8740

REVISION NUMBER	SHEET NUMBER	REVISION	DATE	BY

DESIGNED BY JWB	DRAWN BY JWB	CHECKED BY APR	BRIDGE NO. 10565
DATE 06-05	DATE 06-05	DATE 08-05	SHEET NO. B31

FILEext\1436\bridge\STR_SLB_3SPR4.dgn

PUBLIC ROADS DIV.	STATE DIST. NO.	STATE PROJECT NO.	FEDERAL PROJECT NO.	FISCAL YEAR	COUNTY	SHEET NO.	TOTAL SHEETS
W.V.	6	U305-13 -0.02 00	BR-0013 (042)E	2006	BROOKE	105	163

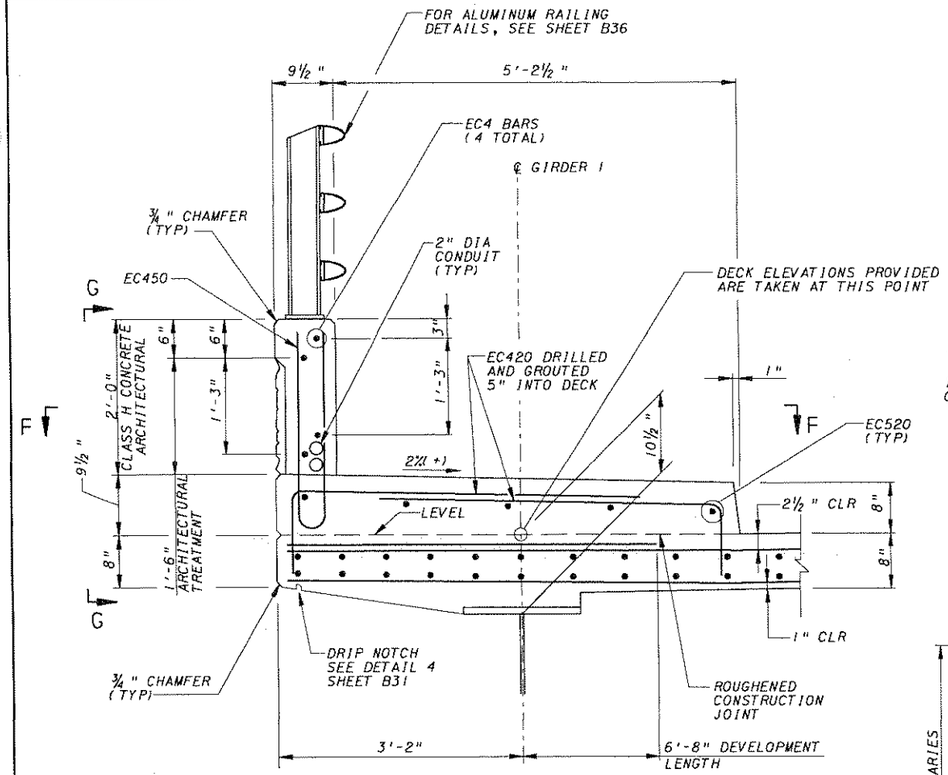

DETAIL 6 (SH B29)

12" 6" 0 1'
1" = 1'-0"

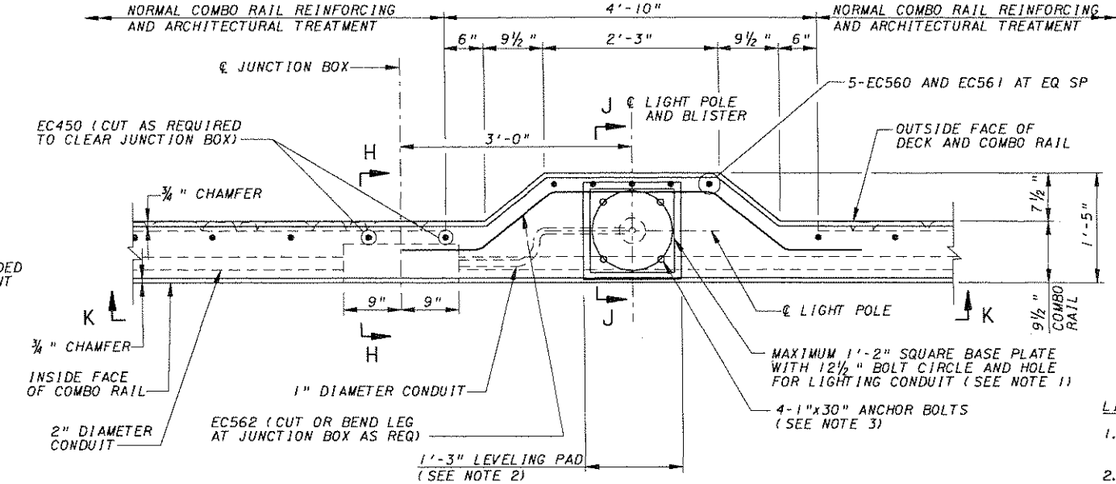

PLAN - LIGHT POLE BLISTER

12" 6" 0 1'
1" = 1'-0"

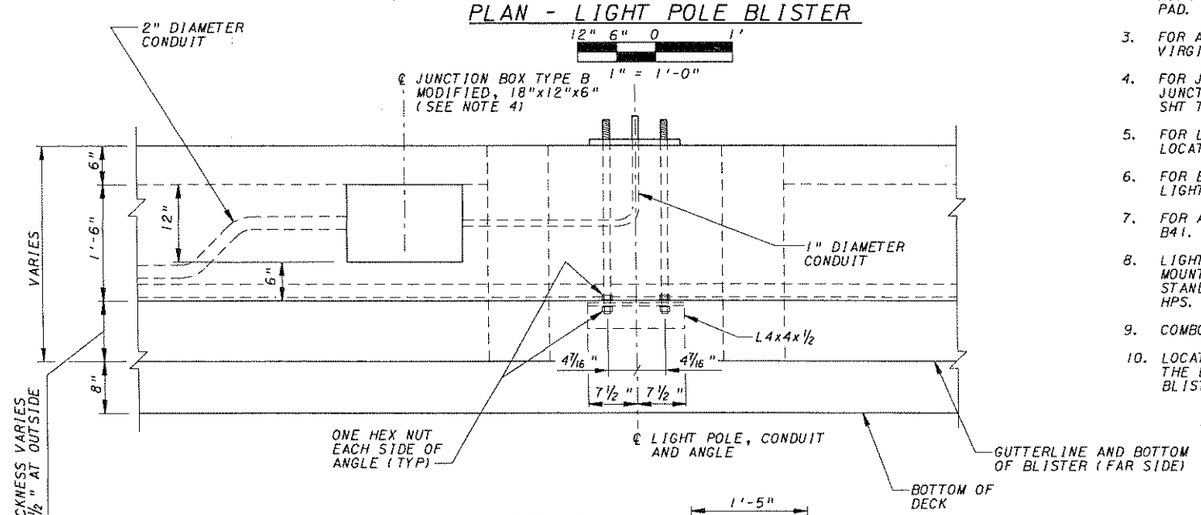

VIEW K-K

12" 6" 0 1'
1" = 1'-0"

LIGHT POLE BLISTER NOTES:

1. ACTUAL BASE PLATE DETAILS TO BE DETERMINED AS REQUIRED BY LIGHTING POLE MANUFACTURER.
2. LEVELING PAD SHALL BE PLACED INTEGRALLY WITH COMBO RAIL. PROVIDED TOOLED EDGE ON PAD.
3. FOR ADDITIONAL ANCHOR BOLT DETAILS, SEE WEST VIRGINIA STANDARD SH TES-40.
4. FOR JUNCTION BOX DETAILS NOT SHOWN, SEE JUNCTION BOX TYPE B ON WEST VIRGINIA STANDARD SHT TEL-42.
5. FOR LIGHT POLE, BLISTER, AND JUNCTION BOX LOCATION, SEE DECK PAVING PLAN ON SH B28.
6. FOR ELECTRICAL DETAILS AND NOTES, SEE THE LIGHTING PLANS.
7. FOR ARCHITECTURAL TREATMENT DETAILS, SEE SH B41.
8. LIGHT POLE TO BE STEEL, TYPE I WITH 40' MOUNTING HEIGHT AND 10' BRACKET ARM. SEE STANDARD SH TEL-11. LUMINAIRE TO BE 250 WATT HPS.
9. COMBO RAIL NOT SHOWN, FOR DETAILS, SEE SH B36.
10. LOCATE SAWED JOINT IN PARAPETS AS DIRECTED BY THE ENGINEER (MINIMUM 6" BEYOND LIMITS OF BLISTER AND JUNCTION BOX).

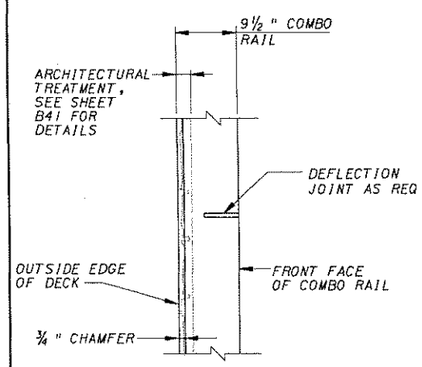

SECTION F-F

(ALUMINUM RAILING NOT SHOWN)

NO SCALE

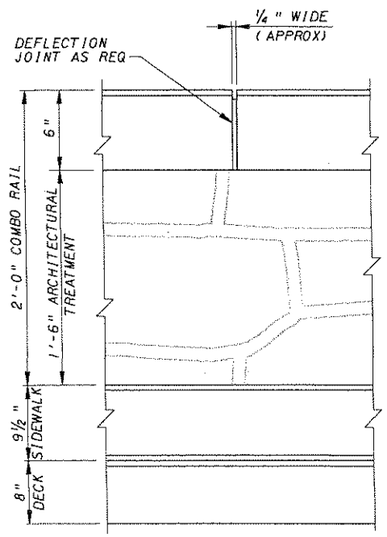

VIEW G-G

NO SCALE

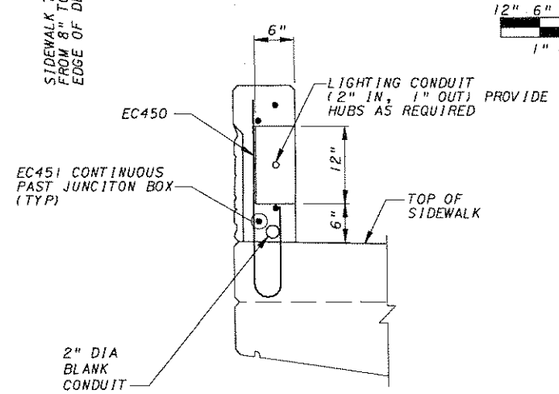

SECTION H-H

12" 6" 0 1'
1" = 1'-0"

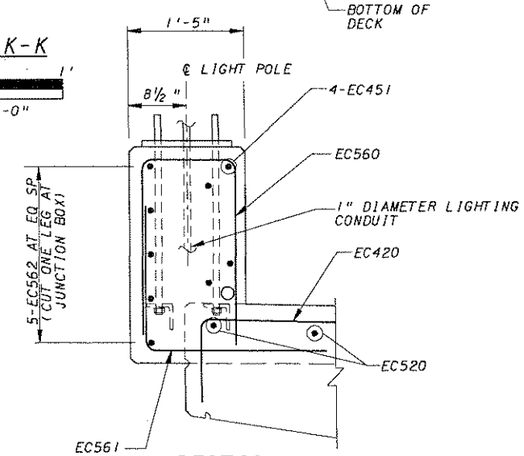

SECTION J-J

12" 6" 0 1'
1" = 1'-0"

NOTES:

1. FOR GENERAL NOTES, SEE SH B5 AND B6.
2. FOR DECK PAVING PLAN, SEE SH B28.
3. FOR TYPICAL DECK CROSS SECTION AND DETAILS, SEE SH B29.
4. FOR REINFORCING BAR SCHEDULE, SEE SH B33.
5. COMBO RAIL SHALL BE CONSTRUCTED PLUMB.
6. FOR DEFLECTION JOINT DETAIL, SEE SH B31, SIMILAR.
7. THE COST OF DRILLING AND GROUTING SIDEWALK REINFORCEMENT IS INCIDENTAL TO ITEM 602002-001, "EPOXY COATED REINFORCING STEEL BAR".

REVISION NUMBER	SHEET NUMBER	REVISION	DATE	BY

THE WEST VIRGINIA DEPARTMENT OF TRANSPORTATION
DIVISION OF HIGHWAYS

THREE SPRINGS DRIVE BRIDGE REPLACEMENT

TYPICAL DECK DETAILS

HDR ENGINEERING, INC.
CONSULTING ENGINEERS
WEIRTON, WV (304) 748-8740

DESIGNED BY JWB	DRAWN BY JWB	CHECKED BY APR	BRIDGE NO. 10565
DATE 06-05	DATE 06-05	DATE 08-05	SHEET NO. B32

FILE:xl\1436\bri dgn\STRuct8_3SPRS.dgn

PUBLIC ROADS DIV.	STATE DIST. NO.	STATE PROJECT NO.	FEDERAL PROJECT NO.	FISCAL YEAR	COUNTY	SHEET NO.	TOTAL SHEETS
W.V.	6	U305-13 -0.02 00	BR-0013 (042)E	2006	BROOKE	106	163

REINFORCEMENT BAR SCHEDULE

MARK	SIZE	LENGTH	NO.	TYPE	A	B	C	D	E	F	G	H	J	K	R	REMARKS
ES401	4	45'-1"	452	STR												
ES402	4	30'-6"	226	STR												
ES403	4	28'-10"	584	STR												(1)
ES404	4	44'-2"	584	STR												(2), MATCH ES403
ES405	4	9'-9"	64	STR												
ES406	4	10'-1"	64	STR												
ES501	5	43'-4"	226	STR												
ES502	5	9'-9"	586	STR												
ES503	5	10'-1"	586	STR												
ES550	5	4'-7½"	336	38												SEE FIGURE
ES601	6	17'-0"	452	STR												
ES602	6	43'-7"	226	STR												
ES603	6	28'-10"	78	STR												(1)
ES604	6	44'-2"	78	STR												(2), MATCH ES604
EC350	3	2'-9¾"	336	21	1'-2"	5¾"	1'-2"								1⅞"	
EC420	4	5'-0"	450	10	1'-0"	4'-0"										225 SETS OF 2
EC450	4	5'-1⅛"	221	21	2'-3"	7⅛"	2'-3"								2"	
EC451	4	40'-0"	72	STR												
EC520	5	58'-0"	20	STR												
EC550	5	4'-6⅜"	336	37												SEE FIGURE
EC560	5	5'-9"	5	12	2'-4"	1'-1"	2'-4"									
EC561	5	5'-4"	5	10	2'-4"	3'-0"										
EC562	5	7'-3"	5	43	1'-6"	1'-2"	1'-11"	1'-2"	1'-6"			11"		11"		

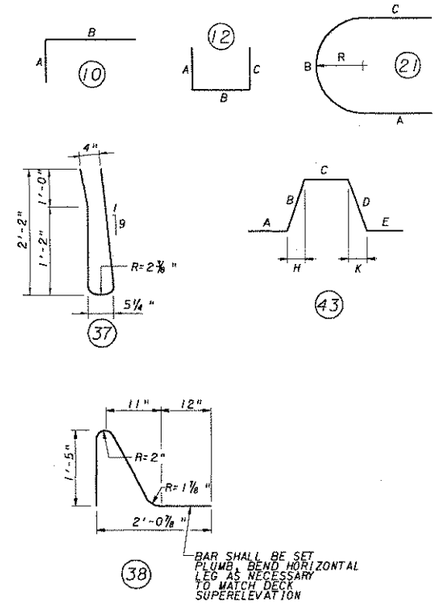

REINFORCING BAR NOTES:

1. "J" DIMENSIONS ON 180° HOOKS TO BE SHOWN ONLY WHERE NECESSARY TO RESTRICT HOOK SIZE OTHERWISE STANDARD HOOKS ARE TO BE USED.
2. ALL DIMENSIONS ARE OUT TO OUT OF BAR EXCEPT "A" AND "G" ON STANDARD 135° AND 180° HOOKS, AND "R" WHICH IS SHOWN TO THE INSIDE OF THE BAR.
3. FIGURES IN CIRCLES SHOW TYPES.
4. "E" IN BAR MARK INDICATES EPOXY COATED.
5. DO NOT USE RAIL STEEL (A616) IN BRIDGE ABUTMENTS, FOOTINGS AND WHERE BENDING OF REINFORCEMENT BARS IS INDICATED.
6. REINFORCING BAR SCHEDULE IS FOR INFORMATION ONLY. VERIFY SCHEDULE PRIOR TO BIDDING AND FABRICATION.
7. NO CORRECTION IN LENGTH FOR BEND CURVATURE IS TO BE MADE.
8. BAR LENGTHS DO NOT ACCOUNT FOR REQUIRED CORRECTION FOR MECHANICAL COUPLERS.

NOTES:

1. FOR GENERAL NOTES, SEE SH B5 AND B6.
2. THE COST OF MECHANICAL COUPLERS IS INCIDENTAL TO ITEM 602002-001 "EPOXY COATED REINFORCING STEEL BAR".
3. MECHANICAL COUPLERS SHALL DEVELOP AT LEAST 125% OF THE SPECIFIED YIELD STRENGTH OF THE REINFORCING BAR.

REMARK KEY:

(1) ONE END INCLUDES MECHANICAL COUPLER
(2) PREPARE ONE END FOR MECHANICAL COUPLER

REVISION NUMBER	SHEET NUMBER	REVISION	DATE	BY

THE WEST VIRGINIA DEPARTMENT OF TRANSPORTATION
DIVISION OF HIGHWAYS

THREE SPRINGS DRIVE BRIDGE REPLACEMENT

DECK PAVING

REINFORCEMENT BAR SCHEDULE

HDR ENGINEERING, INC.
CONSULTING ENGINEERS
WEIRTON, WV (304) 748-8740

DESIGNED BY JWB	DRAWN BY BJS	CHECKED BY APR	BRIDGE NO. 10565
DATE 06-05	DATE 06-05	DATE 08-05	SHEET NO. B33

FILE:x:\1436\bridge\SI_R_3SPR3.dgn

PUBLIC ROADS DIV.	STATE DIST. NO.	STATE PROJECT NO.	FEDERAL PROJECT NO.	FISCAL YEAR	COUNTY	SHEET NO.	TOTAL SHEETS
W.V.	6	U305-13 -0.02 00	BR-0013 (042)E	2006	BROOKE	107	163

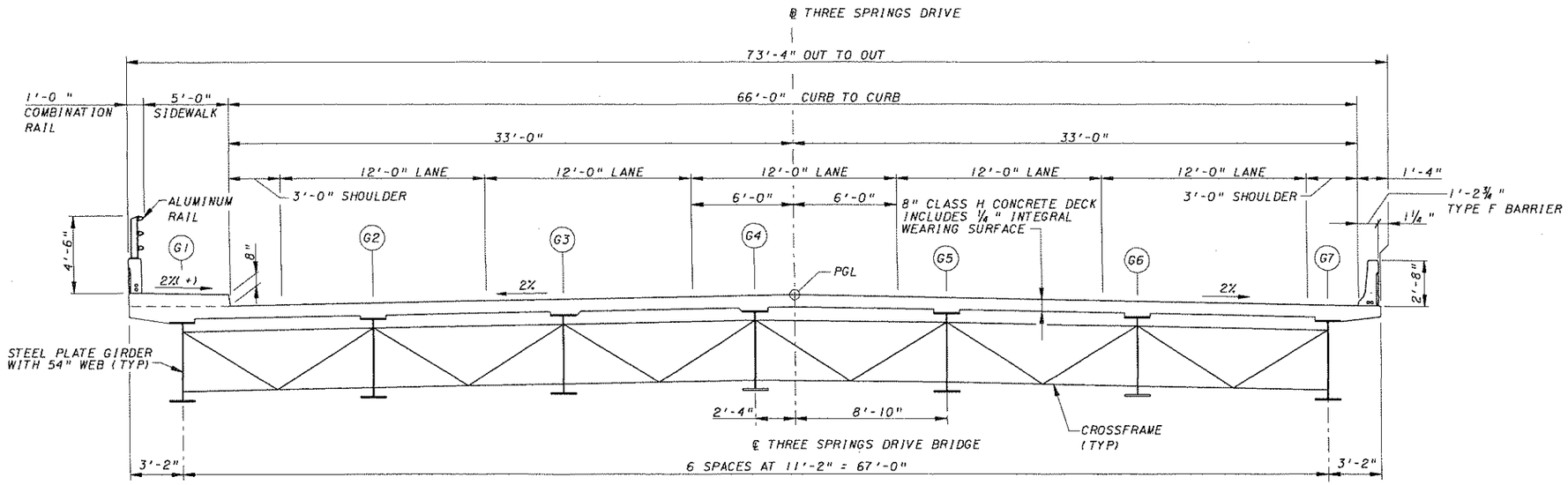

TYPICAL DECK SECTION

(LOOKING AHEAD ON STATION)

4' 2' 0 4'

1/4" = 1'-0"

GIRDER ELEVATION TABLE (FT)

TENTH POINTS	GIRDER G1			GIRDER G2			GIRDER G3			GIRDER G4			GIRDER G5			GIRDER G6			GIRDER G7		
	ELEV	D1	D2	ELEV	D1	D2	ELEV	D1	D2	ELEV	D1	D2	ELEV	D1	D2	ELEV	D1	D2	ELEV	D1	D2
SPAN 1																					
ABUT 1	1154.49	0.00	0.00	1154.65	0.00	0.00	1154.88	0.00	0.00	1155.10	0.00	0.00	1154.97	0.00	0.00	1154.75	0.00	0.00	1154.52	0.00	0.00
1	1154.83	0.13	0.14	1155.00	0.16	0.18	1155.22	0.13	0.15	1155.45	0.13	0.13	1155.32	0.16	0.17	1155.09	0.16	0.17	1154.87	0.13	0.14
2	1155.17	0.24	0.27	1155.33	0.31	0.34	1155.56	0.24	0.28	1155.78	0.24	0.25	1155.65	0.31	0.32	1155.43	0.31	0.32	1155.20	0.24	0.26
3	1155.47	0.33	0.36	1155.64	0.42	0.46	1155.86	0.33	0.37	1156.08	0.33	0.34	1155.95	0.42	0.43	1155.73	0.42	0.44	1155.51	0.33	0.35
4	1155.74	0.38	0.42	1155.91	0.49	0.54	1156.13	0.38	0.43	1156.36	0.38	0.40	1156.23	0.49	0.50	1156.00	0.49	0.51	1155.78	0.38	0.41
5	1155.99	0.40	0.44	1156.16	0.51	0.56	1156.38	0.40	0.45	1156.60	0.40	0.42	1156.47	0.51	0.53	1156.25	0.51	0.53	1156.03	0.40	0.42
6	1156.20	0.39	0.42	1156.37	0.49	0.53	1156.59	0.39	0.43	1156.82	0.39	0.40	1156.69	0.49	0.50	1156.46	0.49	0.51	1156.24	0.39	0.40
7	1156.39	0.33	0.36	1156.56	0.42	0.46	1156.78	0.33	0.37	1157.00	0.33	0.34	1156.87	0.42	0.43	1156.65	0.42	0.44	1156.43	0.33	0.35
8	1156.54	0.25	0.26	1156.71	0.31	0.33	1156.93	0.25	0.27	1157.16	0.25	0.25	1157.03	0.31	0.32	1156.80	0.31	0.32	1156.58	0.25	0.26
9	1156.67	0.13	0.24	1156.84	0.17	0.18	1157.06	0.13	0.14	1157.28	0.13	0.13	1157.15	0.17	0.17	1156.93	0.17	0.17	1156.71	0.13	0.14
PIER	1156.77	0.00	0.00	1156.93	0.00	0.00	1157.16	0.00	0.00	1157.38	0.00	0.00	1157.25	0.00	0.00	1157.03	0.00	0.00	1156.80	0.00	0.00
SPAN 2																					
PIER	1156.78	0.00	0.00	1156.95	0.00	0.00	1157.17	0.00	0.00	1157.39	0.00	0.00	1157.26	0.00	0.00	1157.04	0.00	0.00	1156.82	0.00	0.00
1	1156.83	0.05	0.05	1157.00	0.06	0.06	1157.22	0.05	0.05	1157.44	0.05	0.05	1157.31	0.06	0.06	1157.09	0.06	0.06	1156.87	0.05	0.05
2	1156.86	0.09	0.09	1157.03	0.12	0.12	1157.25	0.09	0.09	1157.48	0.09	0.09	1157.35	0.12	0.12	1157.12	0.12	0.12	1156.90	0.09	0.09
3	1156.88	0.13	0.13	1157.05	0.16	0.16	1157.27	0.13	0.13	1157.49	0.13	0.13	1157.36	0.16	0.16	1157.14	0.16	0.16	1156.92	0.13	0.13
4	1156.88	0.15	0.15	1157.05	0.19	0.19	1157.27	0.15	0.15	1157.49	0.15	0.15	1157.36	0.19	0.19	1157.14	0.19	0.19	1156.92	0.15	0.15
5	1156.86	0.15	0.16	1157.03	0.20	0.20	1157.25	0.15	0.16	1157.48	0.15	0.16	1157.35	0.20	0.20	1157.12	0.20	0.20	1156.90	0.15	0.16
6	1156.83	0.15	0.15	1157.00	0.19	0.20	1157.22	0.15	0.16	1157.44	0.15	0.15	1157.31	0.19	0.19	1157.09	0.19	0.19	1156.87	0.15	0.15
7	1156.78	0.13	0.13	1156.95	0.16	0.17	1157.17	0.13	0.13	1157.39	0.13	0.13	1157.26	0.16	0.16	1157.04	0.16	0.16	1156.82	0.13	0.13
8	1156.71	0.09	0.10	1156.88	0.12	0.12	1157.10	0.09	0.10	1157.32	0.09	0.09	1157.20	0.12	0.12	1156.97	0.12	0.12	1156.75	0.09	0.09
9	1156.63	0.05	0.05	1156.79	0.06	0.07	1157.02	0.05	0.05	1157.24	0.05	0.05	1157.11	0.06	0.06	1156.89	0.06	0.06	1156.66	0.05	0.05
ABUT 2	1156.53	0.00	0.00	1156.70	0.00	0.00	1156.92	0.00	0.00	1157.15	0.00	0.00	1157.02	0.00	0.00	1156.79	0.00	0.00	1156.57	0.00	0.00

NOTES:

1. FOR GENERAL NOTES, SEE SH B5 AND B6.
2. DEFLECTIONS SHOWN IN TABLE ARE AS FOLLOWS:

   D1 EQUALS DEFLECTION DUE TO 8" CLASS H CONCRETE SLAB AND STAY-IN-PLACE FORMS.

   D2 EQUALS DEFLECTION DUE TO 8" CLASS H CONCRETE SLAB, STAY-IN-PLACE FORMS, BARRIERS, SIDEWALK, CLOSURE POUR AND RAILING.
4. ELEVATIONS AND DEFLECTIONS ARE GIVEN IN FEET.
5. A POSITIVE DEFLECTION IS A DOWNWARD DEFLECTION.
6. AFTER ALL GIRDERS HAVE BEEN ASSEMBLED AND FALSEWORK REMOVED, THE ENGINEER SHALL TAKE ELEVATIONS ALONG THE TOPS OF GIRDERS AT POINTS WHERE THE ELEVATIONS ARE SHOWN IN THE TABLE. THE DIFFERENCE BETWEEN THESE ELEVATIONS AND THE GIVEN TOP OF SLAB ELEVATIONS PLUS THE AMOUNT OF DEFLECTION D2 (DEAD LOAD OF CONCRETE SLAB, STAY-IN-PLACE FORMS, BARRIERS, SIDEWALK, CLOSURE POUR AND RAILING) WILL BE THE THICKNESS OF SLAB OVER THE GIRDERS AT THESE POINTS. THE MINIMUM SLAB THICKNESS OVER THE GIRDERS SHALL NOT BE LESS THAN 8" AT THE CENTER OF THE WEB. IF THE GIRDERS HAVE EXCESSIVE CAMBER AND THIS MINIMUM CANNOT BE OBTAINED, THE GRADE LINE SHALL BE ADJUSTED TO OBTAIN THE MINIMUM SLAB THICKNESS. DEFLECTION, D1 IS PROVIDED FOR INFORMATION ONLY.
7. FOR LOCATIONS WHERE ELEVATIONS ARE TAKEN FOR THE GIRDERS, SEE SH B29, B31 AND B32.

THE WEST VIRGINIA DEPARTMENT OF TRANSPORTATION
DIVISION OF HIGHWAYS

THREE SPRINGS DRIVE BRIDGE REPLACEMENT

DECK ELEVATIONS AND DEFLECTIONS

REVISION NUMBER	SHEET NUMBER	REVISION	DATE	BY

HDR ENGINEERING, INC.
CONSULTING ENGINEERS
WEIRTON, WV (304) 748-8740

DESIGNED BY ANC	DRAWN BY BJS	CHECKED BY RTH	BRIDGE NO. 10565
DATE 06-05	DATE 06-05	DATE 07-05	SHEET NO. B34

FILE:H:\1436\bridge\STRC_VAE_3SPRB.DGN

PUBLIC ROADS DIV.	STATE DIST. NO.	STATE PROJECT NO.	FEDERAL PROJECT NO.	FISCAL YEAR	COUNTY	SHEET NO.	TOTAL SHEETS
W.V.	6	U305-13 -0.02 00	BR-0013 (042)E	2006	BROOKE	108	163

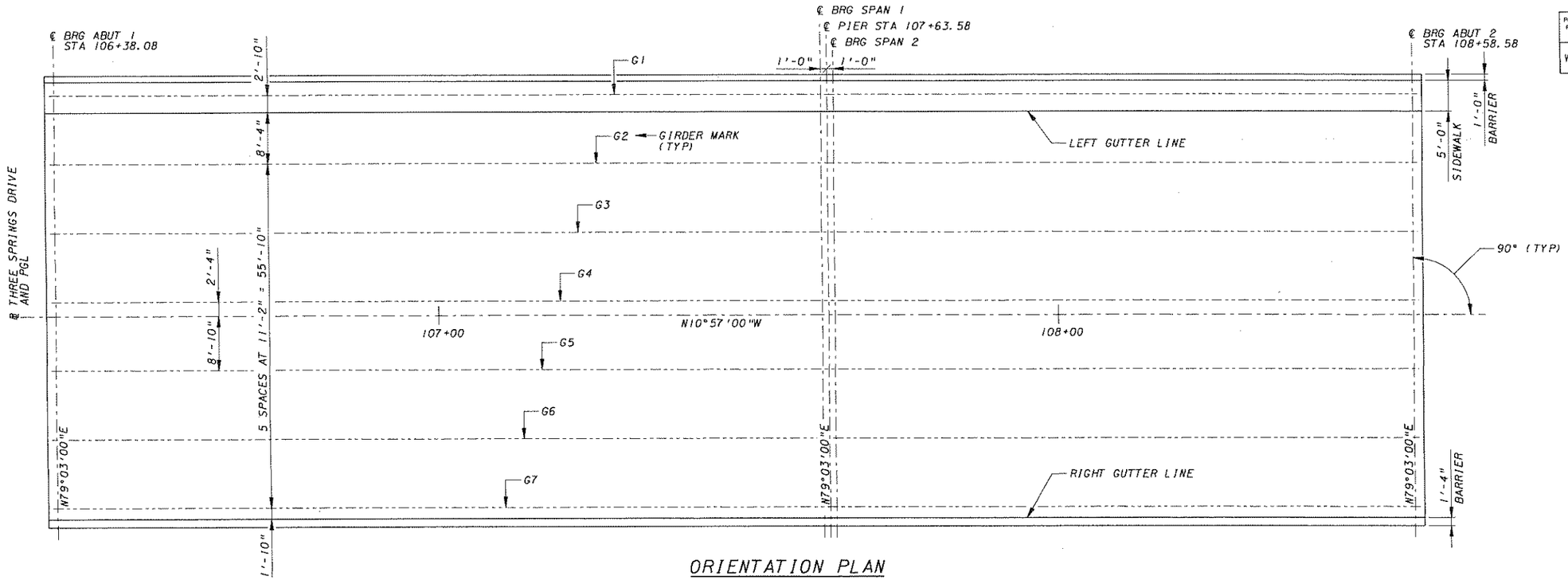

ORIENTATION PLAN

10' 0 10'

1" = 10'-0"

DECK ELEVATION TABLE (FT)

STATION	G1 ELEVATION	LT GUTTER ELEVATION	G2 ELEVATION	G3 ELEVATION	G4 ELEVATION	PGL ELEVATION	G5 ELEVATION	G6 ELEVATION	G7 ELEVATION	RT GUTTER ELEVATION
106+38.08	1154.49	1154.49	1154.65	1154.88	1155.10	1155.15	1154.97	1154.75	1154.52	1154.49
106+40.00	1154.54	1154.54	1154.71	1154.93	1155.15	1155.20	1155.02	1154.80	1154.58	1154.54
106+50.00	1154.82	1154.82	1154.99	1155.21	1155.43	1155.48	1155.30	1155.08	1154.86	1154.82
106+60.00	1155.09	1155.09	1155.26	1155.48	1155.70	1155.75	1155.57	1155.35	1155.13	1155.09
106+70.00	1155.34	1155.34	1155.51	1155.73	1155.96	1156.00	1155.83	1155.60	1155.38	1155.34
106+80.00	1155.57	1155.57	1155.74	1155.96	1156.19	1156.23	1156.05	1155.83	1155.61	1155.57
106+90.00	1155.79	1155.79	1155.95	1156.18	1156.40	1156.45	1156.27	1156.05	1155.82	1155.79
107+00.00	1155.98	1155.98	1156.15	1156.37	1156.60	1156.64	1156.47	1156.24	1156.02	1155.98
107+10.00	1156.16	1156.16	1156.32	1156.55	1156.77	1156.82	1156.64	1156.42	1156.19	1156.16
107+20.00	1156.31	1156.31	1156.48	1156.70	1156.93	1156.97	1156.80	1156.57	1156.35	1156.31
107+30.00	1156.45	1156.45	1156.62	1156.84	1157.07	1157.11	1156.94	1156.71	1156.49	1156.45
107+40.00	1156.57	1156.57	1156.74	1156.96	1157.18	1157.23	1157.05	1156.83	1156.61	1156.57
107+50.00	1156.67	1156.67	1156.84	1157.06	1157.28	1157.33	1157.15	1156.93	1156.71	1156.67
107+60.00	1156.75	1156.75	1156.92	1157.14	1157.36	1157.41	1157.23	1157.01	1156.79	1156.75
107+62.58	1156.77	1156.77	1156.93	1157.16	1157.38	1157.43	1157.25	1157.03	1156.80	1156.77
107+63.58	1156.77	1156.77	1156.94	1157.16	1157.39	1157.43	1157.26	1157.03	1156.81	1156.77
107+64.58	1156.78	1156.78	1156.95	1157.17	1157.39	1157.44	1157.26	1157.04	1156.82	1156.78
107+70.00	1156.81	1156.81	1156.98	1157.20	1157.43	1157.47	1157.30	1157.07	1156.85	1156.81
107+80.00	1156.85	1156.85	1157.02	1157.24	1157.47	1157.51	1157.34	1157.11	1156.89	1156.85
107+90.00	1156.88	1156.88	1157.04	1157.27	1157.49	1157.54	1157.36	1157.14	1156.91	1156.88
108+00.00	1156.88	1156.88	1157.05	1157.27	1157.50	1157.54	1157.37	1157.14	1156.92	1156.88
108+10.00	1156.87	1156.87	1157.03	1157.26	1157.48	1157.53	1157.35	1157.13	1156.90	1156.87
108+20.00	1156.83	1156.83	1157.00	1157.22	1157.45	1157.49	1157.32	1157.09	1156.87	1156.83
108+30.00	1156.78	1156.78	1156.95	1157.17	1157.40	1157.44	1157.27	1157.04	1156.82	1156.78
108+40.00	1156.71	1156.71	1156.88	1157.10	1157.32	1157.37	1157.19	1156.97	1156.75	1156.71
108+50.00	1156.62	1156.62	1156.79	1157.01	1157.23	1157.28	1157.10	1156.88	1156.66	1156.62
108+58.58	1156.53	1156.53	1156.70	1156.92	1157.15	1157.19	1157.02	1156.79	1156.57	1156.53

NOTES:

1. FOR GENERAL NOTES, SEE SH B5 AND B6.
2. DECK ELEVATIONS SHOWN ON THIS SHEET ARE AT CRITICAL STATIONS AND AT EVERY 10' ALONG THE PGL.
3. FOR DECK ELEVATIONS OVER GIRDERS AT TENTH POINTS, SEE SH B34.
4. STATIONS AND ELEVATIONS ARE IN FEET.
5. ELEVATIONS SHOWN ARE TO THE TOP OF THE 8" CONCRETE DECK.
6. FOR CROSS-SLOPE ON BRIDGE DECK, SEE TYPICAL DECK CROSS-SECTION, SH B2.

REVISION NUMBER	SHEET NUMBER	REVISION	DATE	BY

THE WEST VIRGINIA DEPARTMENT OF TRANSPORTATION
DIVISION OF HIGHWAYS

THREE SPRINGS DRIVE BRIDGE REPLACEMENT

DECK ELEVATIONS

HDR ENGINEERING, INC.
CONSULTING ENGINEERS
WEIRTON, WV (304) 748-8740

DESIGNED BY ANC DATE 06-05 | DRAWN BY BJS DATE 06-05 | CHECKED BY RTH DATE 07-05 | BRIDGE NO. 10565 | SHEET NO. B35

FILE:xx\1436\bridges\STH_DAE_3SPRS.dgn

PUBLIC ROADS DIV.	STATE DIST. NO.	STATE PROJECT NO.	FEDERAL PROJECT NO.	FISCAL YEAR	COUNTY	SHEET NO.	TOTAL SHEETS
W.V.	6	U305-13 -0.02 00	BR-0013 (042)E	2006	BROOKE	109	163

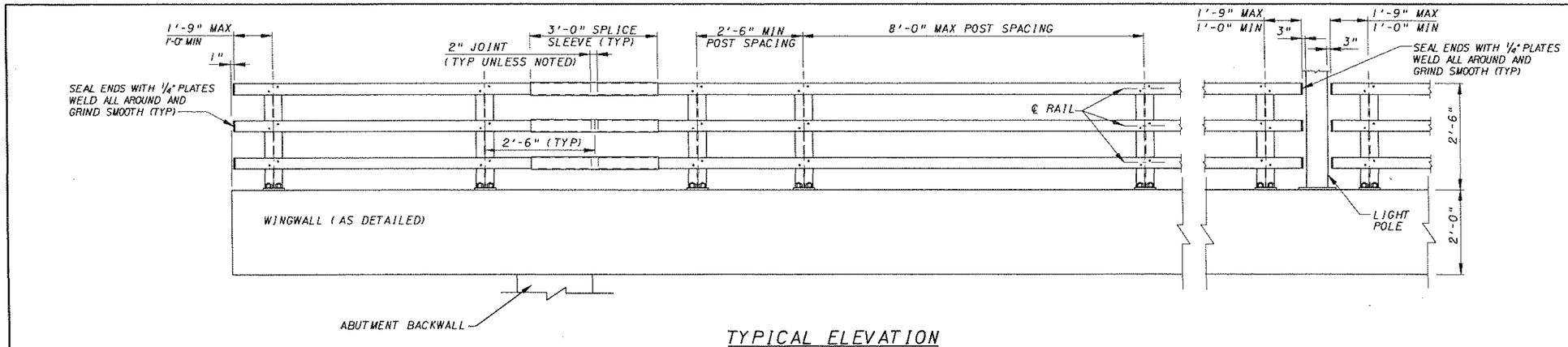

TYPICAL ELEVATION

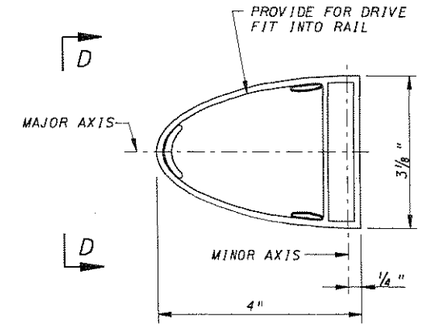

RAIL END CAP

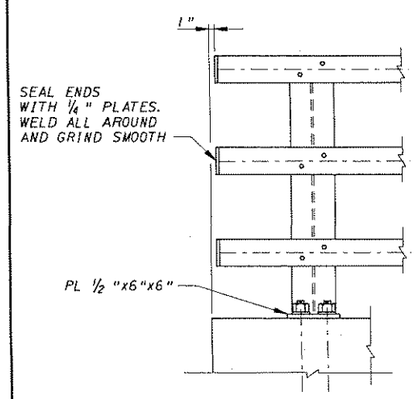

RAIL TERMINATION

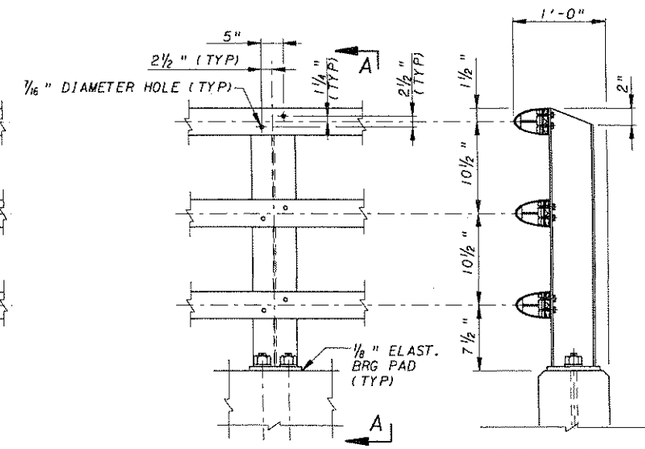

POST AND RAIL CONNECTIONS

SECTION A-A

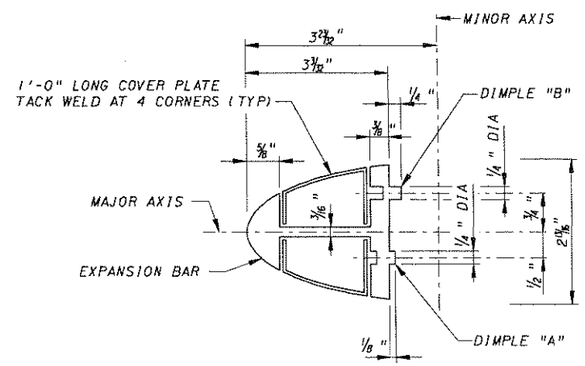

SECTION B-B
(RAIL SPLICE)

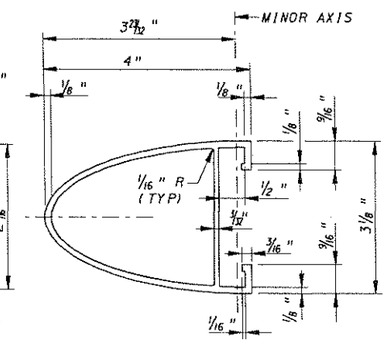

RAIL SECTION

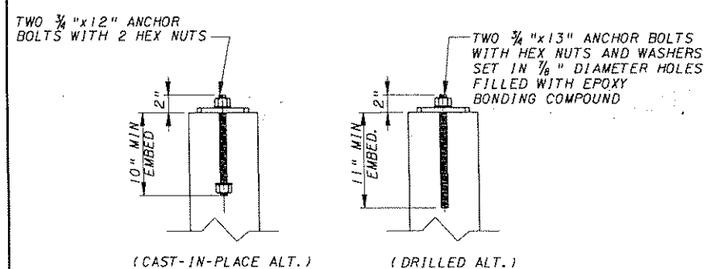

TYPICAL ANCHOR BOLT

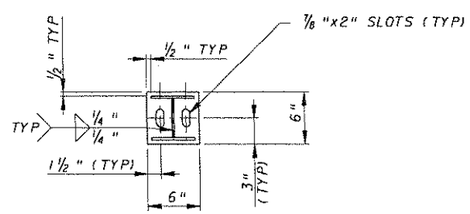

POST BASE PLATE DETAIL

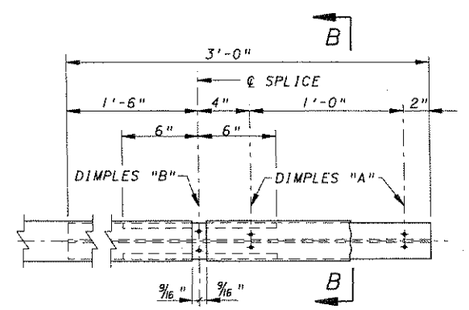

SPLICE SLEEVE

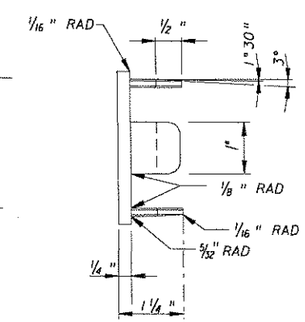

VIEW D-D

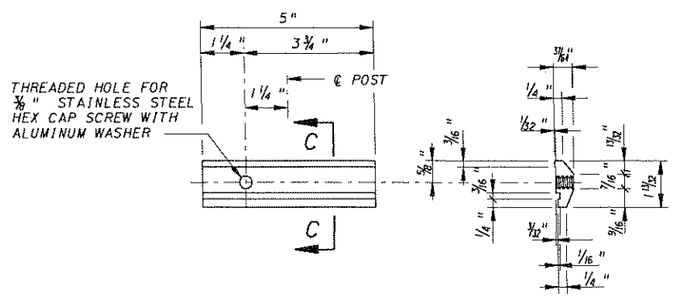

RAIL CLAMP BAR

SECTION C-C

RAILING NOTES:

ALUMINUM MATERIAL SHALL BE IN ACCORDANCE WITH SECTIONS 709.31 THROUGH 709.41 OF THE STANDARD SPECIFICATIONS.

STAINLESS STEEL BOLTS SHALL BE IN ACCORDANCE WITH ASTM F593.

STAINLESS STEEL NUTS SHALL BE IN ACCORDANCE WITH ASTM F594.

STAINLESS STEEL WASHERS SHALL BE THE SAME ALLOY AS THE BOLTS & NUTS.

ANCHOR BOLT ASSEMBLIES SHALL BE CAST IN PLACE OR DRILLED AND GROUTED.

CONDUITS AND JUNCTION BOXES MUST NOT BE DAMAGED DURING ANCHOR BOLT INSTALLATION. IF A JUNCTION BOX OR CONDUIT IS DAMAGED DURING ANCHOR BOLT INSTALLATION, THE DAMAGED CONDUIT OR JUNCTION BOX MUST BE REPLACED AT THE CONTRACTOR'S EXPENSE.

ALL PARTS OF THE ANCHOR BOLT ASSEMBLY SHALL BE GALVANIZED IN ACCORDANCE WITH AASHTO M111.

ALL EXPOSED SHARP EDGES SHALL BE ROUNDED. ALL ROUGH-CUT ENDS AND EDGES EXPOSED SHALL BE GROUND OR FILED SMOOTH.

RAIL POSTS SHALL BE SET NORMAL TO THE ROADWAY GRADE.

CURVED RAILS SHALL BE SHOP FABRICATED TO THE RADIUS.

ELASTOMERIC BEARING PADS SHALL BE PLACED UNDER POST.

THE PAD SHALL COVER THE ENTIRE CONTACT AREA BETWEEN THE POST AND CONCRETE AND SHALL BE NEATLY TRIMMED. THE PADS SHALL MEET THE REQUIREMENTS OF SECTION 715.15.

COST OF ANCHOR BOLT ASSEMBLIES, RAILPOSTS, RAILS, HARDWARE, ANODIZING AND ELASTOMERIC BEARING PADS SHALL BE INCLUDED IN THE UNIT PRICE BID FOR ITEM 617003-001, ALUMINUM RAILING, PER LINEAR FOOT.

THE WEST VIRGINIA DEPARTMENT OF TRANSPORTATION
DIVISION OF HIGHWAYS

THREE SPRINGS DRIVE BRIDGE REPLACEMENT

COMBO RAIL DETAILS

REVISION NUMBER	SHEET NUMBER	REVISION	DATE	BY

HDR ENGINEERING, INC.
CONSULTING ENGINEERS
WEIRTON, WV
(304) 748-8740

DESIGNED BY JWB	DRAWN BY BJS	CHECKED BY APR	BRIDGE NO. 10565
DATE 06-05	DATE 06-05	DATE 08-05	SHEET NO. B36

FILE:x:\1436\bridge\STR_RAR_3SPRI.dgn

PUBLIC ROADS DIV.	STATE DIST. NO.	STATE PROJECT NO.	FEDERAL PROJECT NO.	FISCAL YEAR	COUNTY	SHEET NO.	TOTAL SHEETS
W.V.	6	U305-13 -0.02 00	BR-0013 (042)E	2006	BROOKE	110	163

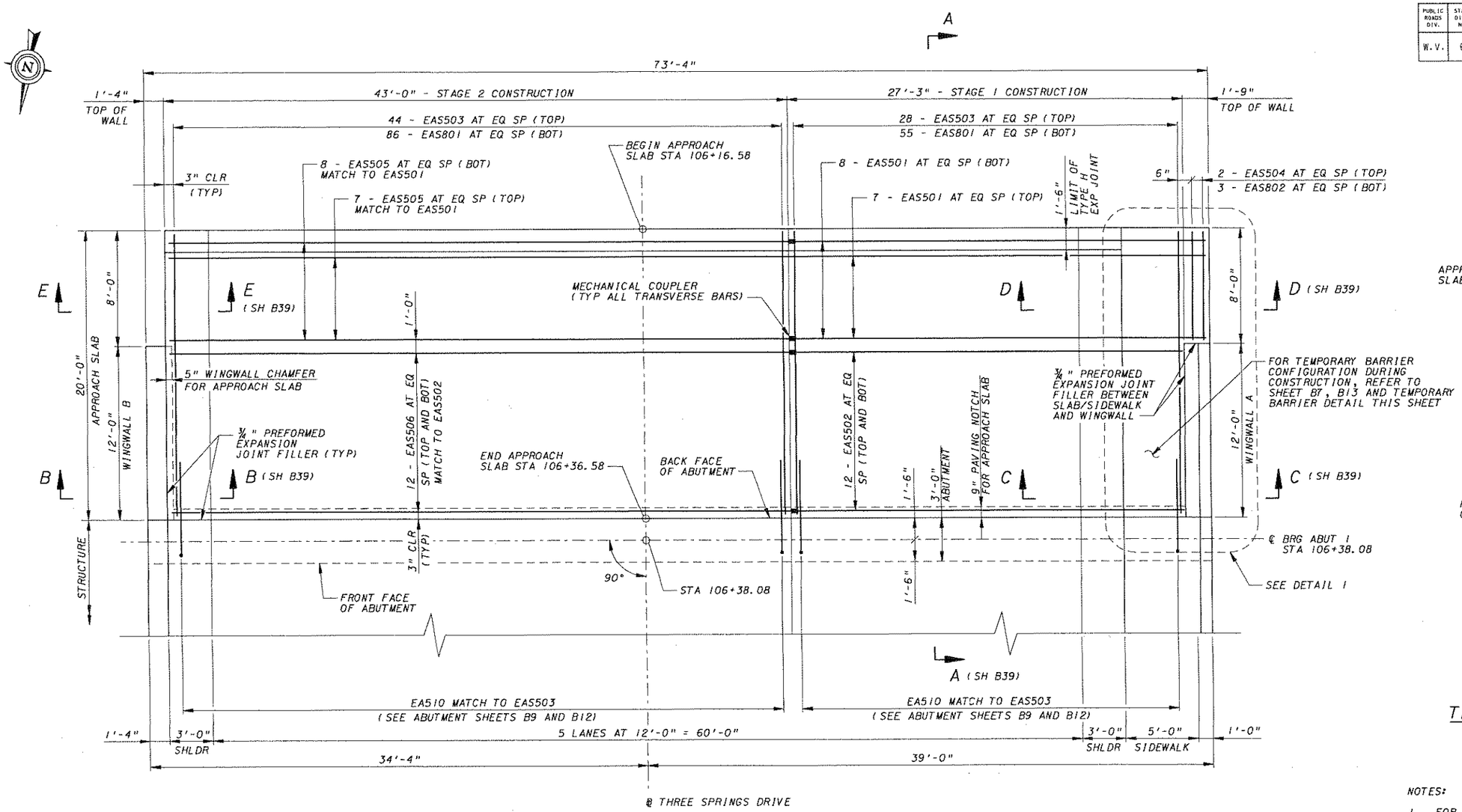

APPROACH SLAB PLAN - ABUTMENT 1

4' 2' 0 4'

1/4" = 1'-0"

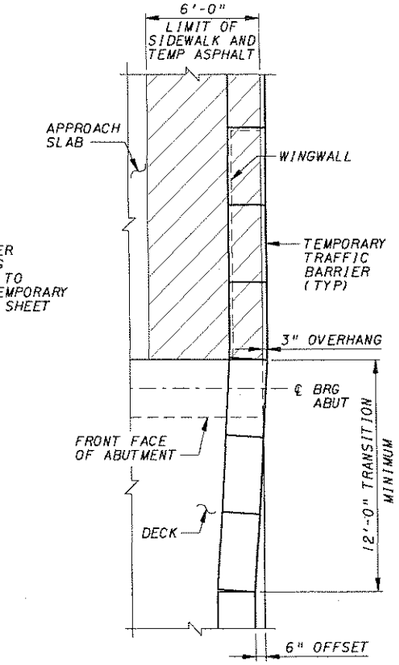

TEMPORARY BARRIER DETAIL

NO SCALE

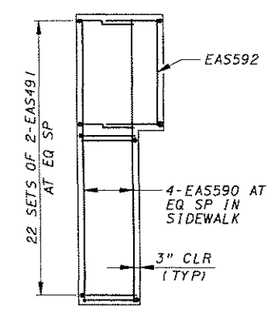

DETAIL 1

(SIDEWALK REINFORCING ABOVE APPROACH SLAB)

NO SCALE

NOTES:

1. FOR GENERAL NOTES, SEE SH B5 AND B6.
2. WORK THIS SHEET WITH SH B39.
3. ALL APPROACH SLAB CONCRETE TO BE CLASS B EXCEPT CLASS H CONCRETE SIDEWALK.
4. FOR REINFORCEMENT BAR SCHEDULE, SEE SH B40.
5. FOR ADDITIONAL SIDEWALK, WINGWALL AND BARRIER DETAILS, SEE ABUTMENT SH B12 TO B14.
6. FOR CONSTRUCTION STAGING DETAILS, SEE SH B7.
7. FOR APPROACH SLAB QUANTITY NOTES, SEE SH B39.

QUANTITIES - ABUT 1 APPROACH SLAB

ITEM	DESCRIPTION	UNIT	QUANTITY
207002-000	SUBGRADE	CY	26
307001-000	AGGREGATE BASE COURSE, CLASS 1	CY	26
402001-001	MARSHALL HOT-MIX ASPHALT SKID RESISTANT PAVEMENT, TYPE 4	TN	16
408002-001	BITUMINIOUS MATERIAL	GA	5
502001-012	12 INCH PORTALND CEMENT CONCRETE APPROACH SLAB	SY	158
	REINFORCING STEEL BARS (EPOXY COATED)	LB	11,937
	3/4" PREFORMED EXPANSION JOINT FILLER	SF	127
	HOT-POURED JOINT SEALER	LF	96
	TYPE H JOINT	LF	66

NOTE: THESE ITEMS ARE INCLUDED IN THE ROADWAY ESTIMATE OF QUANTITIES.

REVISION NUMBER	SHEET NUMBER	REVISION	DATE	BY

THE WEST VIRGINIA DEPARTMENT OF TRANSPORTATION
DIVISION OF HIGHWAYS

THREE SPRINGS DRIVE BRIDGE REPLACEMENT

APPROACH SLAB

ABUTMENT 1

HDR ENGINEERING, INC.
CONSULTING ENGINEERS
WEIRTON, WV (304) 748-8740

DESIGNED BY APR	DRAWN BY APR	CHECKED BY JWB	BRIDGE NO. 10565
DATE 06-05	DATE 06-05	DATE 06-05	SHEET NO. B37

FILE:H:\1436\bridge\STRuctS...35PRL.dgn

PUBLIC ROADS DIV.	STATE DIST. NO.	STATE PROJECT NO.	FEDERAL PROJECT NO.	FISCAL YEAR	COUNTY	SHEET NO.	TOTAL SHEETS
W.V.	6	U305-13 -0.02 00	BR-0013 (042)E	2006	BROOKE	111	163

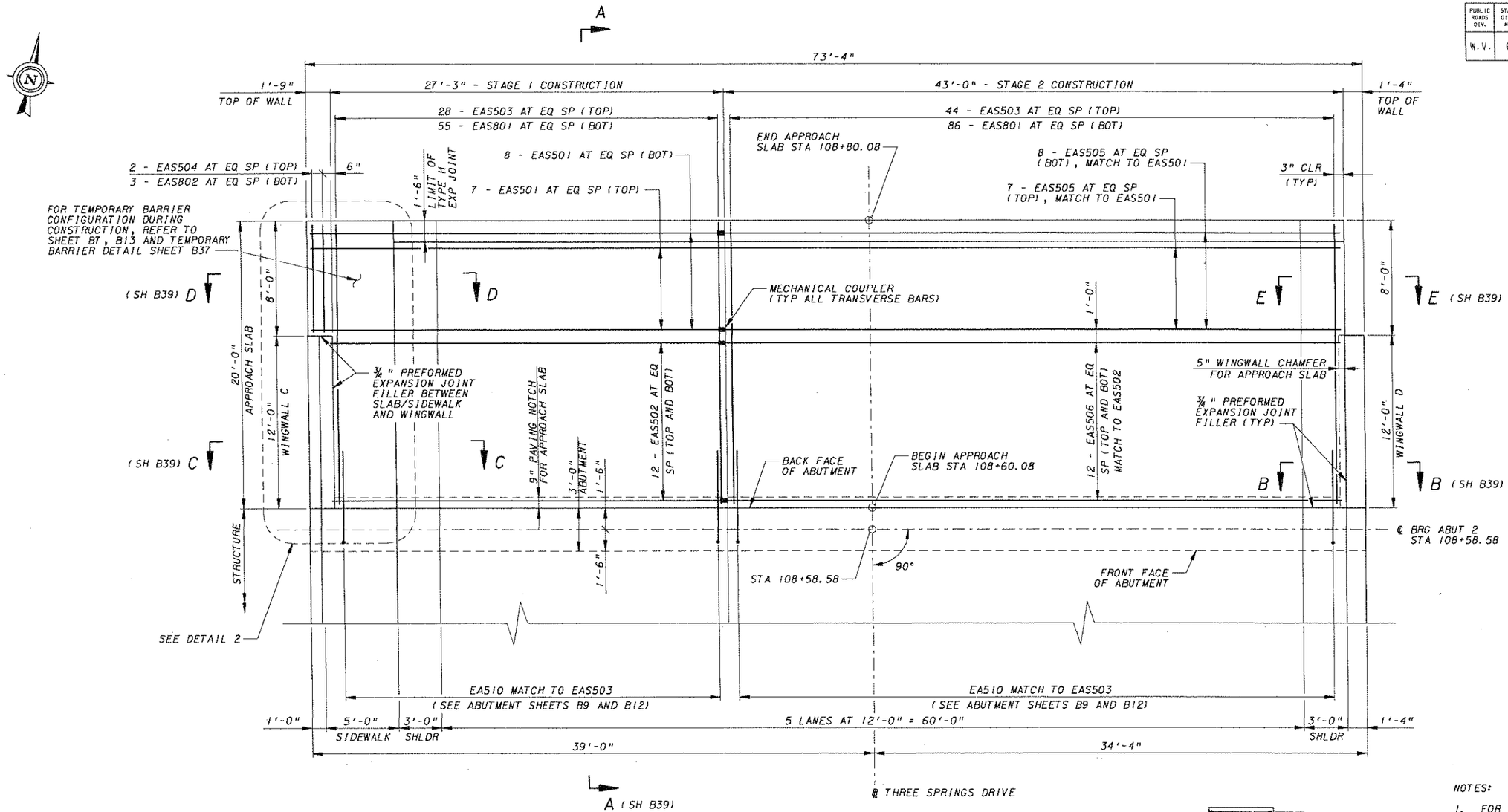

APPROACH SLAB PLAN - ABUTMENT 2

4' 2' 0 4'

¼" = 1'-0"

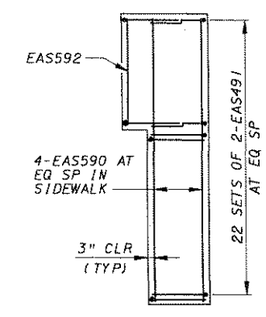

DETAIL 2

(SIDEWALK REINFORCING ABOVE APPROACH SLAB)

NO SCALE

NOTES:

1. FOR GENERAL NOTES, SEE SH B5 AND B6.
2. WORK THIS SHEET WITH SH B39.
3. ALL APPROACH SLAB CONCRETE TO BE CLASS B EXCEPT CLASS H CONCRETE SIDEWALK.
4. FOR REINFORCEMENT BAR SCHEDULE, SEE SH B40.
5. FOR ADDITIONAL SIDEWALK, WINGWALL AND BARRIER DETAILS, SEE ABUTMENT SH B12 TO B14.
6. FOR CONSTRUCTION STAGING DETAILS, SEE SH B7.
7. FOR APPROACH SLAB QUANTITY NOTES, SEE SH B39.

QUANTITIES - ABUT 2 APPROACH SLAB

ITEM	DESCRIPTION	UNIT	QUANTITY
207002-000	SUBGRADE	CY	26
307001-000	AGGREGATE BASE COURSE, CLASS 1	CY	26
402001-001	MARSHALL HOT-MIX ASPHALT SKID RESISTANT PAVEMENT, TYPE 4	TN	16
408002-001	BITUMINIOUS MATERIAL	GA	5
502001-012	12 INCH PORTALND CEMENT CONCRETE APPROACH SLAB	SY	158
	REINFORCING STEEL BARS (EPOXY COATED)	LB	11,937
	¾" PREFORMED EXPANSION JOINT FILLER	SF	127
	HOT-POURED JOINT SEALER	LF	96
	TYPE H JOINT	LF	66

NOTE: THESE ITEMS ARE INCLUDED IN THE ROADWAY ESTIMATE OF QUANTITIES.

REVISION NUMBER	SHEET NUMBER	REVISION	DATE	BY

THE WEST VIRGINIA DEPARTMENT OF TRANSPORTATION
DIVISION OF HIGHWAYS

THREE SPRINGS DRIVE BRIDGE REPLACEMENT

APPROACH SLAB

ABUTMENT 2

HDR ENGINEERING, INC.
CONSULTING ENGINEERS
WEIRTON, WV (304) 748-8740

DESIGNED BY APR	DRAWN BY APR	CHECKED BY JWB	BRIDGE NO. 10565
DATE 06-05	DATE 06-05	DATE 08-05	SHEET NO. B38

FILE:xl\14361\01\dgn\STR_APS_3SPRE.dgn

PUBLIC ROADS DIV.	STATE DIST. NO.	STATE PROJECT NO.	FEDERAL PROJECT NO.	FISCAL YEAR	COUNTY	SHEET NO.	TOTAL SHEETS
W.V.	6	U305-13 -0.02 00	BR-0013 (042)E	2006	BROOKE	112	163

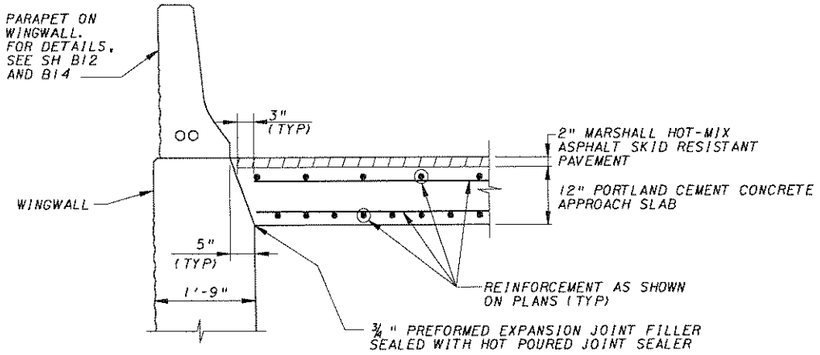

SECTION B-B (SH B37, B38)

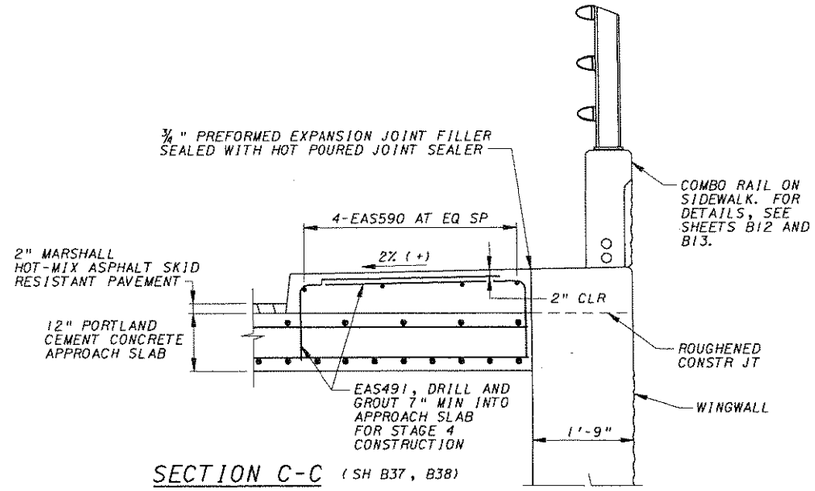

SECTION C-C (SH B37, B38)

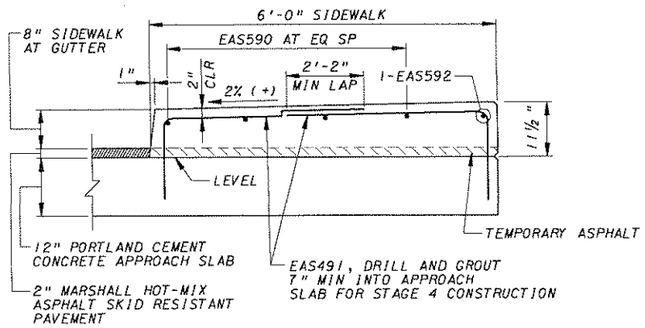

SECTION D-D (SH B12, B37, B38)

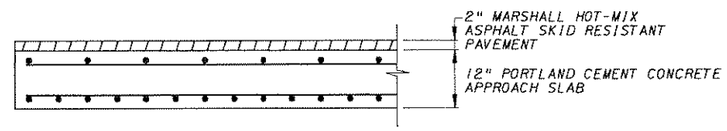

SECTION E-E (SH B37, B38)

NOTES:

1. FOR GENERAL NOTES, SEE SH B5 AND B6.
2. FOR ABUTMENT 1 APPROACH SLAB PLAN, SEE SH B37. SEE SH B38 FOR ABUTMENT 2.
3. FOR SIDEWALK, WINGWALL AND BARRIER DETAILS, SEE ABUTMENT SHEETS B8 TO B15.
4. THE APPROACH SLABS SHALL BE IN ACCORDANCE WITH SECTION 502 OF THE SPECIFICATIONS, EXCEPT AS NOTED.
5. ALL CONCRETE IN APPROACH SLABS SHALL BE CLASS B EXCEPT THE CLASS H CONCRETE SIDEWALK. CURING OF CONCRETE SHALL BE BY BURLAP AND WATER IN ACCORDANCE WITH THE SPECIFICATIONS. APPROACH SLAB CONCRETE SHALL BE PLACED TOWARDS THE SUPERSTRUCTURE AND COMPLETED AT LEAST FOUR HOURS BEFORE THE PEAK AMBIENT TEMPERATURE OF THE CONCRETE PLACEMENT DAY.
6. REINFORCING STEEL SHALL CONFORM TO AASHTO M31, GR 60. ALL REINFORCING STEEL BARS SHALL BE EPOXY COATED.
7. PREFORMED EXPANSION JOINT FILLER AND HOT-POURED JOINT SEALER SHALL CONFORM TO ARTICLES 708.1.2 AND 708.3 OF THE SPECIFICATIONS.
8. THE COST OF THE CONCRETE IN THE APPROACH SLABS, SIDEWALK, REINFORCING STEEL, DRILLING AND GROUTING REINFORCING WHERE REQUIRED, PREFORMED EXPANSION JOINT FILLER, HOT-POURED JOINT SEALER AND TYPE H JOINT SHALL BE INCLUDED IN THE UNIT PRICE BID FOR ITEM 502001-012 "12 INCH PORTLAND CEMENT CONCRETE APPROACH SLAB".
9. QUANTITIES FOR ITEMS 207002-000, 307001-000, 402001-001, 408002-001, AND 502001-012 ARE INCLUDED IN THE ROADWAY ESTIMATE OF QUANTITIES.
10. APPROACH SLAB AND SIDEWALK CROSS-SLOPES ARE SIMILAR TO DECK SLOPES. SEE SH B29.

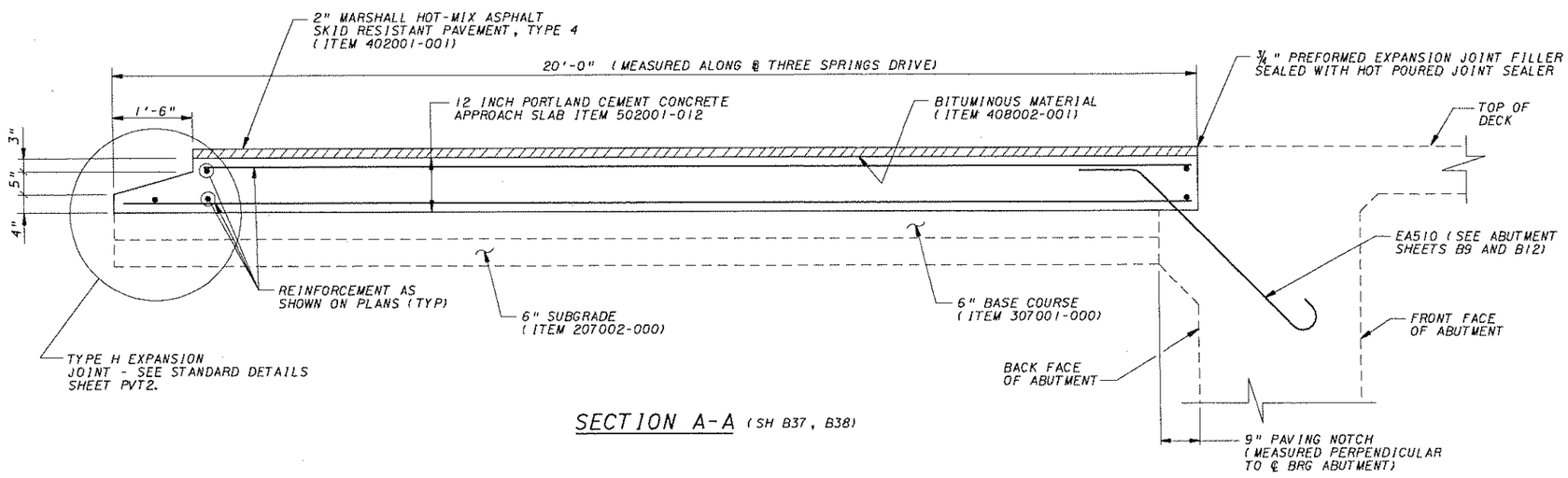

SECTION A-A (SH B37, B38)

16" 8" 0 1.33'

¾" = 1'-0"

REVISION NUMBER	SHEET NUMBER	REVISION	DATE	BY

THE WEST VIRGINIA DEPARTMENT OF TRANSPORTATION
DIVISION OF HIGHWAYS

THREE SPRINGS DRIVE BRIDGE REPLACEMENT

APPROACH SLAB

DETAILS

HDR ENGINEERING, INC.
CONSULTING ENGINEERS
WEIRTON, WV (304) 748-8740

DESIGNED BY JWB	DRAWN BY APR	CHECKED BY JWB	BRIDGE NO. 10565
DATE 06-05	DATE 06-05	DATE 06-05	SHEET NO. B39

FILE:\x:\1436\bridge\STR\APS_3SPR3.DGN

PUBLIC ROADS DIV.	STATE DIST. NO.	STATE PROJECT NO.	FEDERAL PROJECT NO.	FISCAL YEAR	COUNTY	SHEET NO.	TOTAL SHEETS
W.V.	6	U305-13 -0.02 00	BR-0013 (042)E	2006	BROOKE	113	163

REINFORCEMENT BAR SCHEDULE

APPROACH SLAB ABUTMENT 1

MARK	SIZE	LENGTH	NO.	TYPE	A	B	C	D	E	F	G	H	J	K	R	REMARKS
EAS491	4	5'-4½"	44	10	1'-4½"	4'-0"										22 SETS OF 2
EAS501	5	28'-8"	15	STR												(1)
EAS502	5	26'-11"	24	STR												(1)
EAS503	5	18'-1"	72	STR												
EAS504	5	6'-1"	2	STR												
EAS505	5	42'-10"	15	STR												(2), MATCH EAS501
EAS506	5	42'-7"	24	STR												(2), MATCH EAS502
EAS590	5	19'-8"	4	STR												
EAS592	5	7'-8"	1	STR												
EAS801	8	19'-8"	141	STR												
EAS802	8	7'-8"	3	STR												

APPROACH SLAB ABUTMENT 2

MARK	SIZE	LENGTH	NO.	TYPE	A	B	C	D	E	F	G	H	J	K	R	REMARKS
EAS491	4	5'-4½"	44	10	1'-4½"	4'-0"										22 SETS OF 2
EAS501	5	28'-8"	15	STR												(1)
EAS502	5	26'-11"	24	STR												(1)
EAS503	5	18'-1"	72	STR												
EAS504	5	6'-1"	2	STR												
EAS505	5	42'-10"	15	STR												(2), MATCH EAS501
EAS506	5	42'-7"	24	STR												(2), MATCH EAS502
EAS590	5	19'-8"	4	STR												
EAS592	5	7'-8"	1	STR												
EAS801	8	19'-8"	141	STR												
EAS802	8	7'-8"	3	STR												

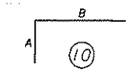

REINFORCING BAR NOTES:

1. "J" DIMENSIONS ON 180° HOOKS TO BE SHOWN ONLY WHERE NECESSARY TO RESTRICT HOOK SIZE OTHERWISE STANDARD HOOKS ARE TO BE USED.
2. ALL DIMENSIONS ARE OUT TO OUT OF BAR EXCEPT "A" AND "G" ON STANDARD 135° AND 180° HOOKS, AND "R" WHICH IS SHOWN TO THE INSIDE OF THE BAR.
3. FIGURES IN CIRCLES SHOW TYPES.
4. "E" IN BAR MARK INDICATES EPOXY COATED.
5. DO NOT USE RAIL STEEL (A616) IN BRIDGE ABUTMENTS, FOOTINGS AND WHERE BENDING OF REINFORCEMENT BARS IS INDICATED.
6. REINFORCING BAR SCHEDULE IS FOR INFORMATION ONLY. VERIFY SCHEDULE PRIOR TO BIDDING AND FABRICATION.
7. NO CORRECTION IN LENGTH FOR BEND CURVATURE IS TO BE MADE.
8. BAR LENGTHS DO NOT ACCOUNT FOR REQUIRED CORRECTION FOR MECHANICAL COUPLERS.

NOTES:

1. FOR GENERAL NOTES, SEE SHEETS B5 AND B6.
2. THE COST OF MECHANICAL COUPLERS IS INCIDENTAL TO THE UNIT BID PRICE OF ITEM 502001-012 "12 INCH PORTLAND CEMENT CONCRETE APPROACH SLAB".
3. MECHANICAL COUPLERS SHALL DEVELOP AT LEAST 125% OF THE SPECIFIED YIELD STRENGTH OF THE REINFORCING BAR.

REMARK KEY:

(1) ONE END INCLUDES MECHANICAL COUPLER
(2) PREPARE ONE END FOR MECHANICAL COUPLER

REVISION NUMBER	SHEET NUMBER	REVISION	DATE	BY

THE WEST VIRGINIA DEPARTMENT OF TRANSPORTATION
DIVISION OF HIGHWAYS

THREE SPRINGS DRIVE BRIDGE REPLACEMENT

APPROACH SLAB

REINFORCEMENT BAR SCHEDULE

HDR ENGINEERING, INC.
CONSULTING ENGINEERS
WEIRTON, WV (304) 748-8740

DESIGNED BY APR	DRAWN BY APR	CHECKED BY JWB	BRIDGE NO. 10565
DATE 06-05	DATE 07-05	DATE 08-05	SHEET NO. B40

FILE:x:\1436\Drlgs\STR_BAR_3SPR4.dgn

PUBLIC ROADS DIV.	STATE DIST. NO.	STATE PROJECT NO.	FEDERAL PROJECT NO.	FISCAL YEAR	COUNTY	SHEET NO.	TOTAL SHEETS
W.V.	6	U305-13 -0.02 00	BR-0013 (042)E	2006	BROOKE	114	163

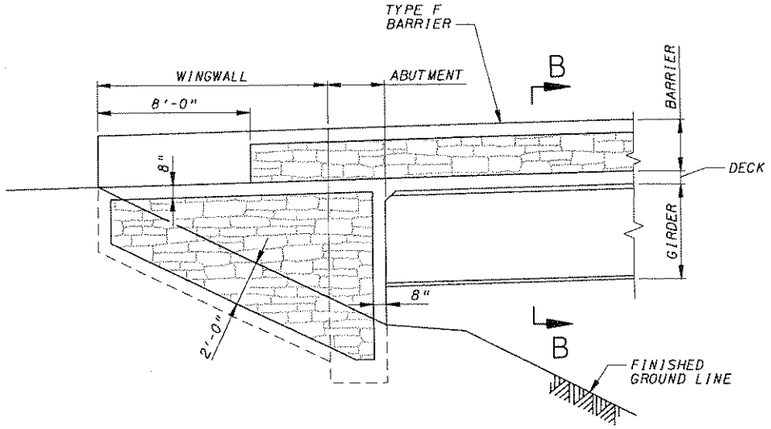

TYPICAL WINGWALL AND ROADWAY BARRIER ARCHITECTURAL TREATMENT

(ABUT 1 SHOWN, ABUT 2 SIMILAR)

NO SCALE

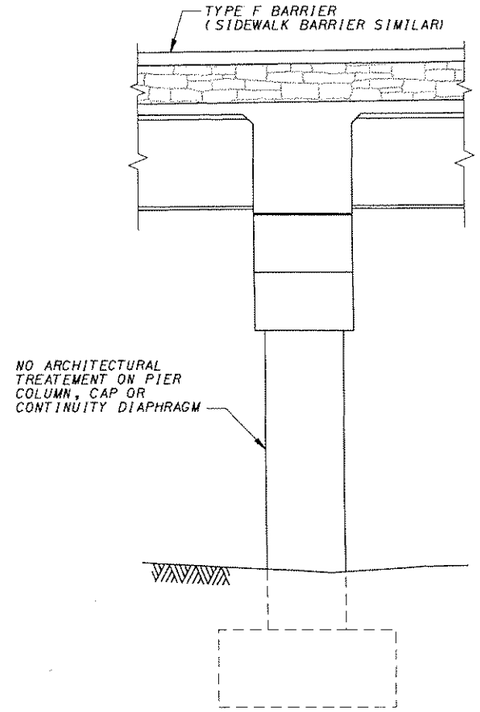

TYPICAL ARCHITECTURAL TREATMENT AT PIER

NO SCALE

SAN DIEGO DRYSTACK
PATTERN #17911
STONE SIZE: 8" - 33" WIDE
3" - 9" HIGH

ARCHITECTURAL TREATMENT PATTERN

USE PATTERN INDICATED AVAILABLE FROM:

FITZGERALD FORMLINERS
1341 EAST POMONA STREET
SANTA ANA, CA 92705
(714)-547-6710

OR APPROVED EQUAL

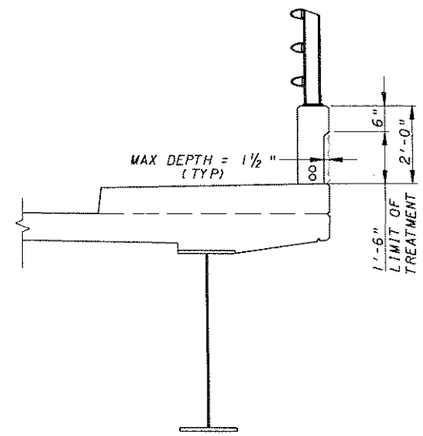

SECTION A-A

NO SCALE

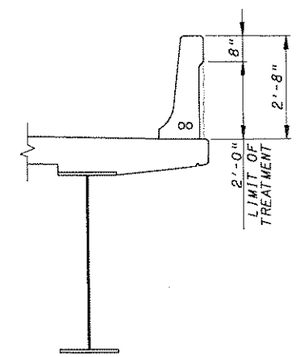

SECTION B-B

NO SCALE

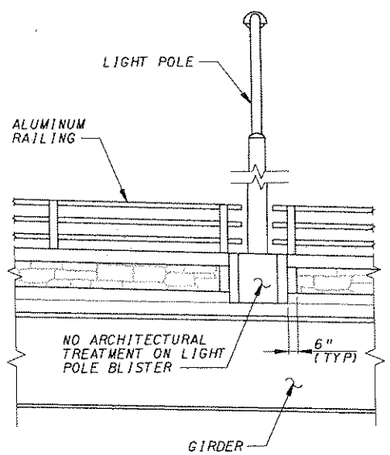

TYPICAL ARCHITECTURAL TREATEMENT AT LIGHT POLE BLISTER

NO SCALE

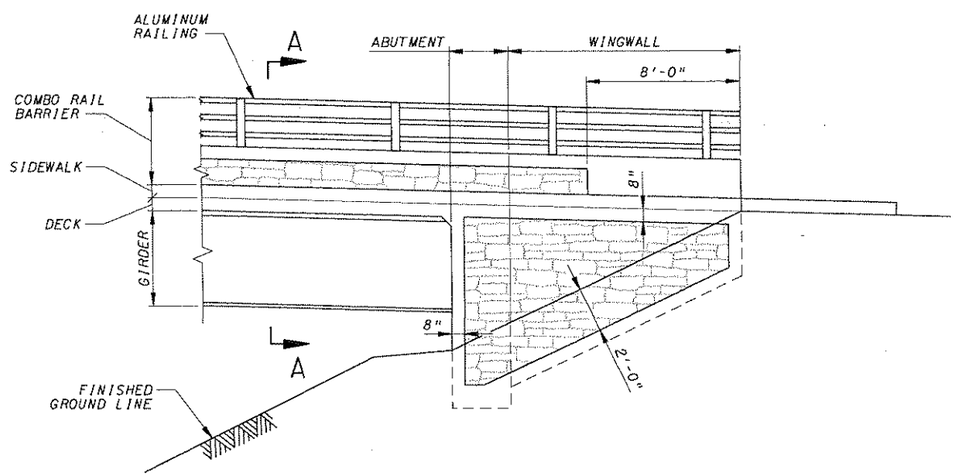

TYPICAL WINGWALL AND SIDEWALK BARRIER ARCHITECTURAL TREATMENT

(ABUT 1 SHOWN, ABUT 2 SIMILAR)

NO SCALE

NOTES:

1. FOR GENERAL NOTES, SEE SH B5 AND B6.
2. STANDARD LINER PANELS AVAILBABLE IN 4'-0" BY 4'-0" SIZES.

THE WEST VIRGINIA DEPARTMENT OF TRANSPORTATION
DIVISION OF HIGHWAYS

THREE SPRINGS DRIVE BRIDGE REPLACEMENT

ARCHITECTURAL TREATMENT DETAILS

HDR ENGINEERING, INC.
CONSULTING ENGINEERS
WEIRTON, WV (304) 748-8740

REVISION NUMBER	SHEET NUMBER	REVISION	DATE	BY

DESIGNED BY APR	DRAWN BY APR	CHECKED BY JWB	BRIDGE NO. 10565
DATE 06-05	DATE 06-05	DATE 08-05	SHEET NO. B41

FILE:H:\1436\bridges\STR_ACH_TSDR1.dgn

PUBLIC ROADS DIV.	STATE DIST. NO.	STATE PROJECT NO.	FEDERAL PROJECT NO.	FISCAL YEAR	COUNTY	SHEET NO.	TOTAL SHEETS
W.V.	6	U305-13 -0.02 00	BR-0013 (042)E	2006	BROOKE	115	163

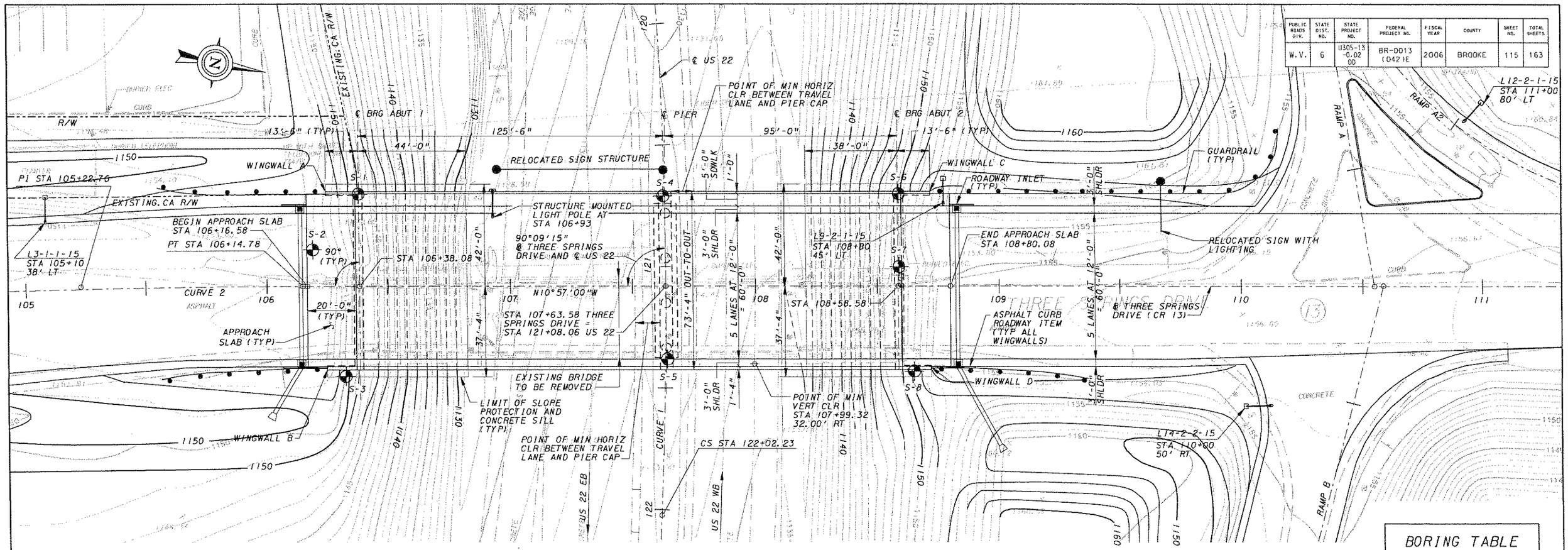

BORING TABLE

BORING #	STATION	OFFSET
S-1	106+38	38' LT
S-2	106+19	15' LT
S-3	106+32	37' RT
S-4	107+63	37' LT
S-5	107+64	30' RT
S-6	108+59	38' LT
S-7	108+59	8' LT
S-8	108+65	35' RT

US 22 CURVE 1

PI = 117+29.48
N = 692775.69
Δ = 36°30'00" RT
Dc = 3°00'00"
Rc = 1909.86'
Tc = 493.92'
Ec = 62.84'
θs = 3°45'00"
Ls = 250.00'
ST = 83.37'
LT = 166.70'
K = 124.98'
P = 1.36'
Xs = 249.89'
Ys = 5.45'
LC = 249.95
TS = 109+85.56
SC = 112+35.56
CS = 122+02.23
ST = 124+52.23

THREE SPRINGS DR. CURVE 2

PI = 105+22.76
N = 692592.36
Δ = 2°38'11.86" RT
Dc = 1°25'56.62"
R = 4000.00'
L = 184.07'
T = 92.05'
E = 1.06'
SE = N.C.
PRC 104+30.71
PT 106+14.78

NOTES:

1. FOR LIST OF SHEETS, SEE SH B4.
2. FOR GENERAL NOTES, SEE SH B5 AND B6.
3. ⊕ - INDICATES STRUCTURE BORING

DESIGN DESIGNATION

A.D.T. (2004) = 11,000
A.D.T. (2024) = 16,000
D.H.V. = 1600
D. = 60/40
T. = 1%
V. = 30 mph

THE WEST VIRGINIA DEPARTMENT OF TRANSPORTATION
DIVISION OF HIGHWAYS

THREE SPRINGS DRIVE BRIDGE REPLACEMENT

SITUATION PLAN

HDR ENGINEERING, INC.
CONSULTING ENGINEERS
WEIRTON, WV (304) 748-8740

REVISION NUMBER	SHEET NUMBER	REVISION	DATE	BY

DESIGNED BY APR	DRAWN BY APR	CHECKED BY JWB	BRIDGE NO. 10565
DATE 06-05	DATE 06-05	DATE 08-05	SHEET NO. B42

FILES:A:\1436\Original\STR_SIT_SPDR.dgn

PUBLIC ROADS DIV.	STATE DIST. NO.	STATE PROJECT NO.	FEDERAL PROJECT NO.	FISCAL YEAR	COUNTY	SHEET NO.	TOTAL SHEETS
W.V.	6	U305-13 -0.02 00	BR-0013 (042)E	2006	BROOKE	116	163

HDR

ENGINEERS FIELD BORING LOG

BORING NO.	S-1
SHEET	1 OF 2
DATE: START:	1/24/05
END:	1/24/05
G.S. ELEV.	1147.6

PROJECT NAME: Three Springs Drive Bridge — COUNTY: Brooke
STATE RTE. NO.: 13 — SECT.: - — SEGMENT: - — OFFSET: -
MILE POST / STATION: 106+38 — OFFSET / LANE: 38 LT
INSPECTOR (SIGNED): Dan Pulice — DRILLERS NAME/COMPANY: Paul Waddell / PA Drilling Co.
EQUIPMENT USED: Simco 2000 Track Mount Rig
DRILLING METHODS: 3 1/4" ID HSA / SPT / NX Core Wireline
CASING: SIZE: 3 1/4" ID — DEPTH: 14.0 — WATER: DEPTH: 10.3 — TIME: 0 HR — DATE: 1/24/05
CHECKED BY: RLD — DATE: 3-3-05 — DEPTH: 15.7 — TIME: 24 HR — DATE: 1/25/05

DEPTH (FT)	SAMPLE NO. AND TYPE/CORE RUN	BLOWS/6.5 FT. ON SAMPLER	RECOVERY (feet)	Recovery (%) / RQD (%)	POCKET PENET. or TORVANE (TSF)	USCS / AASHTO	SYMBOL	DESCRIPTION	REMARKS
0	S-1	2 5 9	1.5	100	N/A	gc / a-2-6		CLAYEY GRAVEL (a-2-6) - Brown; Moist to Dry; Medium Dense	
1.5									
1144.0 BOTTOM OF FTG ABUT 1									
5 / 5.0	S-2	12 11 10	1.5	100	N/A				
6.5									
10 / 10.0	S-3	24 11 25	1.5	100	N/A	gm / a-1-B		1137.6 — 10.0 ROCK FRAGS (a-1-b) - Dark Gray; Dry; Dense	- weathered rock
11.5									
14.0	R-1		1.2	80 / 60				1133.6 — 14.0 INTERBEDDED SANDSTONE and SHALE - Gray; Hard to Average (HCSI=4-3); Slightly to Freshly Weathered; Thinly Bedded, RD=0-15°; Closely to Widely Spaced Fracs, FRD=0-25° (Stratum RQD=75%)	- Auger ref. @ 14.0
15 / 15.5	R-2		5.0	100 / 80					
1128.3 EST PILE TIP ELEV ABUT 1									
20 / 20.5	R-3		5.0	100 / 84				1125.2 — 22.4 SILTY SHALE - D.Gray; Avg (HCSI=3); Fr-Sl Weath; V.Thin Bed, 0-10°; V. Cl-Wid Spcd Frcs, FRD=0-10°	Shale, sandy in zones (Strat RQD=82%)
25									

NOTE: N/A - Not Applicable due to the presence of granular material

S-1

HDR

ENGINEERS FIELD BORING LOG

BORING NO.	S-1
SHEET	2 OF 2
DATE: START:	1/24/05
END:	1/24/05
G.S. ELEV.	1147.6

PROJECT NAME: Three Springs Drive Bridge — COUNTY: Brooke
STATE RTE. NO.: 13 — SECT.: - — SEGMENT: - — OFFSET: -
MILE POST / STATION: 106+38 — OFFSET / LANE: 38 RT

DEPTH (FT)	SAMPLE NO. AND TYPE/CORE RUN	BLOWS/6.5 FT. ON SAMPLER	RECOVERY (feet)	Recovery (%) / RQD (%)	POCKET PENET. or TORVANE (TSF)	USCS / AASHTO	SYMBOL	DESCRIPTION	REMARKS
25 / 25.5								1122.1 — 25.5 SILTY SHALE - (cont.) BOH @ 25.5	- 25.0-25.5, Limestone
30									
35									
40									
45									
50									

S-1 (cont.)

3' 0 3'
1" = 3'-0"

REVISION NUMBER	SHEET NUMBER	REVISION	DATE	BY

THE WEST VIRGINIA DEPARTMENT OF TRANSPORTATION
DIVISION OF HIGHWAYS

THREE SPRINGS DRIVE BRIDGE REPLACEMENT

TEST BORING LOGS

HDR ENGINEERING, INC.
CONSULTING ENGINEERS
WEIRTON, WV (304) 748-8740

DESIGNED BY APR	DRAWN BY APR	CHECKED BY RLD	BRIDGE NO. 10565
DATE 06-05	DATE 06-05	DATE 08-05	SHEET NO. 843

FILE:\\14361\dgn\STR_HDR_3SPRI.dgn

PUBLIC ROADS DIV.	STATE DIST. NO.	STATE PROJECT NO.	FEDERAL PROJECT NO.	FISCAL YEAR	COUNTY	SHEET NO.	TOTAL SHEETS
W.V.	6	U305-13 -0.02 00	BR-0013 (042)E	2006	BROOKE	117	163

HDR

ENGINEERS FIELD BORING LOG

BORING NO.	S-2
SHEET	1 OF 2
DATE: START:	1/12/05
END:	1/12/05
G.S. ELEV.	1153.3

PROJECT NAME: Three Springs Drive Bridge — COUNTY: Brooke
STATE RTE. NO.: 13 — SECT.: - — SEGMENT: - — OFFSET: -
MILE POST / STATION: 106+19 — OFFSET / LANE: 15 LT
INSPECTOR (SIGNED): John Budner — DRILLERS NAME/COMPANY: Paul Weddell / PA Drilling Co.
EQUIPMENT USED: CME 45 Truck Mount Rig
DRILLING METHODS: 3 1/4" ID HSA / SPT / NX Core Wireline
CASING: SIZE: 3 1/4" ID — DEPTH: 20.0 — WATER: DEPTH: 15.5 — TIME: 0 HR — DATE: 1/12/05
CHECKED BY: RLD — DATE: 3-3-05 — DEPTH: 12.1 — TIME: 24 HR — DATE: 1/13/05

DEPTH (FT.)	SAMPLE NO. AND TYPE/CORE RUN	BLOWS/0.5 FT. ON SAMPLER	RECOVERY (feet)	Recovery (%) / RQD (%)	POCKET PENET. or TORVANE (TSF)	USCS / AASHTO	SYMBOL	DESCRIPTION	REMARKS
0									
1.5	S-1	1 1 1	0.9	60	N/A	cl/sc a-6		SANDY CLAY (a-6) - Brown; Moist to Wet; Very Soft; some rock frags	
5.0								1148.3 — 5.0	
6.5	S-2	8 8 32	1.0	67	N/A	gc a-2-6		CLAY and ROCK FRAGS (a-2-6) - Dark Brown; Moist to Dry; Dense	(Probable Fill)
1144.0 BOTTOM OF FTG ABUT 1								1143.3 — 10.0	
10 / 11.5	S-3	9 7 13	1.0	67	N/A	gm a-1-b		ROCK FRAGS . (a-1-b) - Gray; Dry; Medium Dense	
								1138.3 — 15.0	
15 / 16.5	S-4	1 1 2	0.5	33	N/A	gc a-2-6		CLAY and ROCK FRAGS (a-2-6) - Brown; Moist to Dry; Loose	
								1133.3 — 20.0	
20	S-5	50/0	0.0	0	-			SANDSTONE - Gray; Average (HCSI=3) ; Sl to Fr Weath; Thickly Bedded, RD=0-10° ; V. Cl to Cl Spaced Fracs, FRD= 0-10° (Stratum RQD=81%)	20.0
20.5	R-1		0.3	60 / 0					
25	R-2		5.0	100 / 86					- 23.0 vert. frac w/ iron stains

NOTE: N/A - Not Applicable due to the presence of granular material

S-2

HDR

ENGINEERS FIELD BORING LOG

BORING NO.	S-2
SHEET	2 OF 2
DATE: START:	1/12/05
END:	1/12/05
G.S. ELEV.	1153.3

PROJECT NAME: Three Springs Drive Bridge — COUNTY: Brooke
STATE RTE. NO.: 13 — SECT.: - — SEGMENT: - — OFFSET: -
MILE POST / STATION: 106+19 — OFFSET / LANE: 15 LT

DEPTH (FT.)	SAMPLE NO. AND TYPE/CORE RUN	BLOWS/0.5 FT. ON SAMPLER	RECOVERY (feet)	Recovery (%) / RQD (%)	POCKET PENET. or TORVANE (TSF)	USCS / AASHTO	SYMBOL	DESCRIPTION	REMARKS
1128.3 EST PILE TIP ELEV ABUT 1 / 25									
25.5								SANDSTONE - (cont.)	
	R-3		5.0	100 / 64				1125.9 — 27.4	
								SILTY SHALE - Gray; Average (HCSI=3); Fr. to Moderately Weath.; V. Thinly Bedded, RD= 0- 10 °; Closely Spaced Fracs, FRD=0-10° (Stratum RQD=79%)	
								1124 — 29.3	
30 / 30.5								1122.8 — 30.5	
								LIMESTONE - Gray; Hard (HCSI=4); Fr to Sl Weath; Med. to Thin Bedded, RD=Indistinct; Cl to Wide Spcd Fracs, FRD=0 ° (Stratum RQD=33%)	
35								BOH @ 30.5	
40									
45									
50									

S-2 (cont.)

3' 0 3'
1" = 3'-0"

REVISION NUMBER	SHEET NUMBER	REVISION	DATE	BY

THE WEST VIRGINIA DEPARTMENT OF TRANSPORTATION
DIVISION OF HIGHWAYS

THREE SPRINGS DRIVE BRIDGE REPLACEMENT

TEST BORING LOGS

HDR ENGINEERING, INC.
CONSULTING ENGINEERS
WEIRTON, WV (304) 748-8740

DESIGNED BY APR	DRAWN BY APR	CHECKED BY RLD	BRIDGE NO. 10565
DATE 06-05	DATE 06-05	DATE 08-05	SHEET NO. B44

FILE:\\f436\hdr\dgn\STR2_HDR_3SPR2.dgn

PUBLIC ROADS DIV.	STATE DIST. NO.	STATE PROJECT NO.	FEDERAL PROJECT NO.	FISCAL YEAR	COUNTY	SHEET NO.	TOTAL SHEETS
W.V.	6	U305-13-0.02 00	BR-0013 (042)E	2006	BROOKE	118	163

HDR

ENGINEERS FIELD BORING LOG

BORING NO. S-3
SHEET 1 OF 2
DATE: START: 1/12/05
END: 1/12/05
G.S. ELEV. 1151.8

PROJECT NAME: Three Springs Drive Bridge — COUNTY: Brooke
STATE RTE. NO.: 13 — SECT.: - — SEGMENT: - — OFFSET: -
MILE POST / STATION: 106+32 — OFFSET / LANE: 37 RT
INSPECTOR (SIGNED): John Budner — DRILLERS NAME/COMPANY: Paul Waddell / PA Drilling Co.
EQUIPMENT USED: CME 45 Truck Mount Rig
DRILLING METHODS: 3 1/4" ID HSA / SPT / NX Core Wireline
CASING: SIZE: 3 1/4" ID — DEPTH: 18.6 — WATER: DEPTH: 8.1 — TIME: 0 HR — DATE: 1/12/05
CHECKED BY: RLD — DATE: 3-3-05 — DEPTH: 10.7 — TIME: 24 HR — DATE: 1/13/05

DEPTH (FT)	SAMPLE NO. AND TYPE/CORE RUN	BLOWS/6 FT. ON SAMPLER	RECOVERY (feet)	Recovery (%) / RQD (%)	POCKET PENET. or TORVANE (TSF)	USCS / AASHTO	SYMBOL	DESCRIPTION	REMARKS
0	S-1	1 1 1	0.7	47	1.0	cl / a-6		SILTY CLAY (a-6) - Brown; Moist to Wet; Medium to Stiff; some rock frags	
1.5									
5 — 5.0	S-2	5 3 3	1.4	93	N/A	gm / a-1-b		SILTY GRAVEL (a-1-b) - Dark Brown to Black; Dry to Moist; Loose; some rock frags (1146.8 — 5.0)	(Probable Fill)
6.5									
1144.0 BOTTOM OF FTG ABUT 1									
10 — 10.0	S-3	4 5 4	1.2	80	N/A				
11.5									
15 — 15.0	S-4	12 12 12	1.4	93	N/A				
16.5									
18.5	S-5	50/.1	0.1	100	N/A			SANDSTONE - Gray; Average (HCSI=3); Sl to Fr Weath; Thickly Bedded, RD=0-10"; Closely Spaced Fracs, FRD=0-10" (Stratum RQD=58%) (1133 — 16.8; 1129.1 — 22.5)	- auger ref @ 18.5
18.6	R-1		1.9	79 / 63					
20 — 21.0	R-2		3.0	100 / 77					- vert frac @ 20.0 and 21.7, w/ iron stains
1128.3 EST PILE TIP ELEV ABUT 1								SILTY SHALE - (description on next page)	
24.0									
25									

NOTE: N/A - Not Applicable due to the presence of granular material

S-3

HDR

ENGINEERS FIELD BORING LOG

BORING NO. S-3
SHEET 2 OF 2
DATE: START: 1/12/05
END: 1/12/05
G.S. ELEV. 1151.8

PROJECT NAME: Three Springs Drive Bridge — COUNTY: Brooke
STATE RTE. NO.: 13 — SECT.: - — SEGMENT: - — OFFSET: -
MILE POST / STATION: 106+32 — OFFSET / LANE: 37 RT

DEPTH (FT)	SAMPLE NO. AND TYPE/CORE RUN	BLOWS/6 FT. ON SAMPLER	RECOVERY (feet)	Recovery (%) / RQD (%)	POCKET PENET. or TORVANE (TSF)	USCS / AASHTO	SYMBOL	DESCRIPTION	REMARKS
25	R-3		4.9	98 / 74				SILTY SHALE - Gray; Average (HCSI= 3); Freshly to Moderately Weathered; Very Thinly Bedded, RD= 0-10" ; Very Closely to Widely Spaced Fracs, FRD=0-10" (Stratum RQD=83%) (1124.4 — 27.2)	
29.0									
30	R-4		4.8	96 / 66				LIMESTONE - Gray; Hard (HCSI=4); Freshly to Slightly Weathered; Very Thickly Bedded, RD= Indistinct; Closely to Widely Spaced Fracs, FRD=0 " (Stratum RQD=77%)	
34.0									
35	R-5		4.9	98 / 92					
								SANDY SILTSTONE - Gray; Average (HCSI=3); Freshly to Slightly Weathered; Very Thickly Bedded, RD=0" ; Closely to Widely Spaced Fracs, FRD=0 " (Stratum RQD=93%) (1114.1 — 37.5; 1112.8 — 39.0) BOH @ 39.0	
39.0									
40									
45									
50									

S-3 (cont.)

3' 0 3'
1" = 3'-0"

REVISION NUMBER	SHEET NUMBER	REVISION	DATE	BY

THE WEST VIRGINIA DEPARTMENT OF TRANSPORTATION
DIVISION OF HIGHWAYS

THREE SPRINGS DRIVE BRIDGE REPLACEMENT

TEST BORING LOGS

HDR ENGINEERING, INC.
CONSULTING ENGINEERS
WEIRTON, WV (304) 748-8740

DESIGNED BY APR	DRAWN BY APR	CHECKED BY RLD	BRIDGE NO. 10565
DATE 06-05	DATE 06-05	DATE 08-05	SHEET NO. B45

FILE:x:\1436\bridge\Stricadr_3SPR3.dgn

PUBLIC ROADS DIV.	STATE DIST. NO.	STATE PROJECT NO.	FEDERAL PROJECT NO.	FISCAL YEAR	COUNTY	SHEET NO.	TOTAL SHEETS
		U305-13-0.02 00	BR-0013 (042)E	2006	BROOKE	119	163

HDR

ENGINEERS FIELD BORING LOG

BORING NO. S-4
SHEET 1 OF 1
DATE: START: 1/13/05
END: 1/13/05
G.S. ELEV. 1131.7

PROJECT NAME: Three Springs Drive Bridge — COUNTY: Brooke
STATE RTE. NO.: 13 — SECT.: - — SEGMENT: - — OFFSET: -
MILE POST / STATION: 107+63 — OFFSET / LANE: 37 LT
INSPECTOR (SIGNED): John Budner — DRILLERS NAME/COMPANY: Paul Waddell / PA Drilling Co.
EQUIPMENT USED: CME 45 Truck Mount Rig
DRILLING METHODS: 3 1/4" ID HSA / SPT / NX Core Wireline
CASING: SIZE: 3 1/4" ID — DEPTH: 1.5 — WATER: DEPTH: 8.0 — TIME: 0 HR — DATE: 1/13/05
CHECKED BY: RLD — DATE: 3-3-05 — DEPTH: Caved — TIME: 24 HR — DATE: 1/13/05

DEPTH (FT.)	SAMPLE NO. AND TYPE/CORE RUN	BLOWS/0.5 FT. ON SAMPLER	RECOVERY (feet)	Recovery (%) / RQD (%)	POCKET PENET or TORVANE (TSF)	USCS / AASHTO	SYMBOL	DESCRIPTION	REMARKS
0	S-1	2 / 3 / 4	0.5	33	2.5	cl / a-6		SANDY CLAY (a-8) - Brown; Moist to Dry; Very Stiff; some rock frags (1130.2, 1.5)	- auger refusal @ 1.5
1.5	R-1		2.9	83 / 11				SILTSTONE - Gray; Average (HCSI=3); Freshly to Moderately Weathered; Thickly to Very Thickly Bedded, RD= Indistinct; Very Closely to Medium Spaced Fracs, FRD=0-10° (Stratum RQD=12%) (1123.6, 8.1)	- some interbedded sandstone and shale
5 / 5.0	R-2		4.5	90 / 20				LIMESTONE - Gray; Hard (HCSI=4); Freshly to Moderately Weathered; Indistict Bedding; Closely to Widely Spaced Fracs, FRD=0° (Stratum RQD=47%) (1120.2, 11.5)	
10 / 10.0	R-3		1.5	100 / 67				BOH @ 11.5	
11.5									
15									
20									
25									

1125.5 BOTTOM OF FTG PIER

NOTE: N/A - Not Applicable due to the presence of granular material
24 HR water level: caved at 1.5'

S-4

HDR

ENGINEERS FIELD BORING LOG

BORING NO. S-5
SHEET 1 OF 1
DATE: START: 1/13/05
END: 1/13/05
G.S. ELEV. 1132.5

PROJECT NAME: Three Springs Drive Bridge — COUNTY: Brooke
STATE RTE. NO.: 13 — SECT.: - — SEGMENT: - — OFFSET: -
MILE POST / STATION: 107+64 — OFFSET / LANE: 30 RT
INSPECTOR (SIGNED): John Budner — DRILLERS NAME/COMPANY: Paul Waddell / PA Drilling Co.
EQUIPMENT USED: CME 45 Truck Mount Rig
DRILLING METHODS: 3 1/4" ID HSA / SPT / NX Core Wireline
CASING: SIZE: 3 1/4" ID — DEPTH: 1.5 — WATER: DEPTH: 4.0 — TIME: 0 HR — DATE: 1/13/05
CHECKED BY: RLD — DATE: 3-3-05 — DEPTH: Caved — TIME: 24 HR — DATE: 1/14/05

DEPTH (FT.)	SAMPLE NO. AND TYPE/CORE RUN	BLOWS/0.5 FT. ON SAMPLER	RECOVERY (feet)	Recovery (%) / RQD (%)	POCKET PENET or TORVANE (TSF)	USCS / AASHTO	SYMBOL	DESCRIPTION	REMARKS
0	S-1	1 / 1 / 30	0.5	33	2.5	cl / a-6		SANDY CLAY (a-8) - Brown; Moist to Dry; Medium to Stiff, some rock fragments (1131, 1.5)	- Auger ref. @ 1.5
1.5	R-1		2.8	93 / 37				SILTSTONE - Gray; Average (HCSI=3); Freshly to Moderately Weathered; Thickly to Very Thickly Bedded, RD= 0-10° ; Closley to Med. Spaced Fracs, FRD=0-10° (Stratum RQD=34%) (1124.3, 8.2)	
4.5 / 5	R-2		5.0	100 / 32				LIMESTONE - Gray; Hard (HCSI=4); Freshly to Moderately Weathered; Indistinct Bedding; Closely to Widely Spaced Fracs, FRD=0° (Stratum RQD=61%) (1121, 11.5)	
9.5 / 10	R-3		2.0	100 / 80				BOH @ 11.5	
11.5									
15									
20									
25									

1125.5 BOTTOM OF FTG PIER

NOTE: N/A - Not Applicable due to the presence of granular material
24 HR water level: caved at 1.5'

S-5

3' 0 3'
1" = 3'-0"

REVISION NUMBER	SHEET NUMBER	REVISION	DATE	BY

THE WEST VIRGINIA DEPARTMENT OF TRANSPORTATION
DIVISION OF HIGHWAYS

THREE SPRINGS DRIVE BRIDGE REPLACEMENT

TEST BORING LOGS

HDR ENGINEERING, INC.
CONSULTING ENGINEERS
WEIRTON, WV (304) 748-8740

DESIGNED BY APR	DRAWN BY APR	CHECKED BY RLD	BRIDGE NO. 10565
DATE 06-05	DATE 06-05	DATE 08-05	SHEET NO. 846

FILE: z:\1436\bridge\STR_BR_3SPR4.dgn

PUBLIC ROADS DIV.	STATE DIST. NO.	STATE PROJECT NO.	FEDERAL PROJECT NO.	FISCAL YEAR	COUNTY	SHEET NO.	TOTAL SHEETS
		U305-13 -0.02 00	BR-0013 (042) E	2006	BROOKE	120	163

HDR

ENGINEERS FIELD BORING LOG

BORING NO.	S-6
SHEET	1 OF 2
DATE: START:	1/20/05
END:	1/20/05
G.S. ELEV.	1149.3

PROJECT NAME: Three Springs Drive Bridge — COUNTY: Brooke
STATE RTE. NO.: 13 — SECT.: - — SEGMENT: - — OFFSET: -
MILE POST / STATION: 108+59 — OFFSET / LANE: 38 LT
INSPECTOR (SIGNED): R. Dodson — DRILLERS NAME/COMPANY: Paul Waddell / PA Drilling Co.
EQUIPMENT USED: Simco 2000 Track Rig
DRILLING METHODS: 3 1/4" ID HSA/ SPT / NX Wireline Core
CASING: SIZE: 3 1/4" — DEPTH: 16.5 — WATER: DEPTH: 10.5 — TIME: 0 HR — DATE: 1/20/05
CHECKED BY: RLD — DATE: 3-3-05 — DEPTH: 14.0 — TIME: 24 HR — DATE: 1/21/05

DEPTH (FT.)	SAMPLE NO AND TYPE/CORE RUN	BLOWS/0.5 FT ON SAMPLER	RECOVERY (feet)	Recovery (%) / RQD (%)	POCKET PENET or TORVANE (TSF)	USCS / AASHTO	SYMBOL	DESCRIPTION	REMARKS
0	S-1	3 5 7	0.9	60	N/A	gm / a-1-b		ROCK FRAGMENTS and SILTY CLAY (a-1-b) - Brown; Moist to Dry; Medium Dense to Very Dense; trace coal frags	
1.5									
1148.0 BOTTOM OF FTG ABUT 2									
5.0	S-2	3 27 10	1.5	100	N/A				
6.5									
10.0	S-3	7 40 50/.4	0.6	43	N/A				
11.4									
15.0	S-4	11 12 53	1.0	67	N/A				
16.5								1132.6 — 16.5	
	R-1		2.8	80 / 54				INTERBEDDED SANDSTONE and SHALE - Gray; Average to Hard (HCSI=3-4); Freshly to Slightly Weathered; Very Thickly Bedded, RD=0-10° ; Very Closely to Widely Spaced Fracs, FRD=0-10° (Stratum RQD=70%)	
20.0									
1127.5 EST PILE TIP ELEV ABUT 2	R-2		5.0	100 / 84					
25									

NOTE: N/A - Not applicable due to the presence of granular material

S-6

HDR

ENGINEERS FIELD BORING LOG

BORING NO.	S-6
SHEET	2 OF 2
DATE: START:	1/20/05
END:	1/20/05
G.S. ELEV.	1149.3

PROJECT NAME: Three Springs Drive Bridge — COUNTY: Brooke
STATE RTE. NO.: 13 — SECT.: - — SEGMENT: - — OFFSET: -
MILE POST / STATION: 108+59 — OFFSET / LANE: 38 LT

DEPTH (FT.)	SAMPLE NO AND TYPE/CORE RUN	BLOWS/0.5 FT. ON SAMPLER	RECOVERY (feet)	Recovery (%) / RQD (%)	POCKET PENET or TORVANE (TSF)	USCS / AASHTO	SYMBOL	DESCRIPTION	REMARKS
25									
25.0	R-3		1.5	100 / 60				INTERBEDDED SANDSTONE and SHALE - (cont.) 1122.8 — 26.5	- Limestone from 26.0 to 26.5
26.5								BOH @ 26.5	
30									
35									
40									
45									
50									

S-6 (cont.)

3' 0 3'
1" = 3'-0"

REVISION NUMBER	SHEET NUMBER	REVISION	DATE	BY

THE WEST VIRGINIA DEPARTMENT OF TRANSPORTATION
DIVISION OF HIGHWAYS

THREE SPRINGS DRIVE BRIDGE REPLACEMENT

TEST BORING LOGS

HDR ENGINEERING, INC.
CONSULTING ENGINEERS
WEIRTON, WV (304) 748-8740

DESIGNED BY APR	DRAWN BY APR	CHECKED BY RLD	BRIDGE NO. 10565
DATE 06-05	DATE 06-05	DATE 08-05	SHEET NO. 847

FILE:N:\1436\bridge\STRC\BR_3SPRS.dgn

PUBLIC ROADS DIV.	STATE DIST. NO.	STATE PROJECT NO.	FEDERAL PROJECT NO.	FISCAL YEAR	COUNTY	SHEET NO.	TOTAL SHEETS
		U305-13 -0.02 00	BR-0013 (042)E	2006	BROOKE	121	163

HDR

ENGINEERS FIELD BORING LOG

BORING NO. S-7
SHEET 1 OF 2
DATE: START: 1/17/05
END: 1/17/05
G.S. ELEV. 1150.8

PROJECT NAME: Three Springs Drive Bridge — COUNTY: Brooke
STATE RTE. NO.: 13 — SECT.: - — SEGMENT: - — OFFSET: -
MILE POST / STATION: 108+59 — OFFSET / LANE: 8 LT
INSPECTOR (SIGNED): R. Dodson — DRILLERS NAME/COMPANY: Paul Waddell / PA Drilling Co.
EQUIPMENT USED: Simco 2000 Track Rig
DRILLING METHODS: 3 1/4" ID HSA / SPT / NX Core Wireline
CASING: SIZE: 3 1/4" DEPTH: 19.0 WATER: DEPTH: 15.3 TIME: 0 HR DATE: 1/19/05
CHECKED BY: RLD DATE: 3-3-05 DEPTH: 14.3 TIME: 24 HR DATE: 1/20/05

DEPTH (FT)	SAMPLE NO. AND TYPE/CORE RUN	BLOWS/0.5 FT. ON SAMPLER	RECOVERY (feet)	Recovery (%) / RQD (%)	POCKET PENET. or TORVANE (TSF)	USCS / AASHTO	SYMBOL	DESCRIPTION	REMARKS
0									
1.5	S-1	1 3 5	0.7	47	N/A	gc / a-2-6		ROCK FRAGMENTS and SILTY CLAY (a-2-6) - Brown; Wet to Dry; Loose to Medium Dense	(Probable Fill)
1148.0 BOTTOM OF FTG ABUT 2 — 5.0									
6.5	S-2	9 5 4	1.0	67	N/A				
10 — 10.0	S-3	7 8 5	0.8	53	N/A				
11.5									
15 — 15.0	S-4	7 17 12	1.0	67	N/A				
16.5									
16.0								1131.8 — 19.0	
20 — 21.0	R-1		1.6	80 / 60				INTERBEDDED SANDSTONE and SHALE - Gray; Avg to Hard (HCSI=3-4); Fr. to Sl. Weathered; V. Thickly Bedded, RD=0-10°; V. Closely to Widely Spaced Fracs, FRD=0-10° (Stratum RQD=54%)	
1127.5 EST PILE TIP ELEV ABUT 2 — 25	R-2		5.0	100 / 56					

NOTE: N/A - Not applicable due to the presence of granular material

S-7

HDR

ENGINEERS FIELD BORING LOG

BORING NO. S-7
SHEET 2 OF 2
DATE: START: 1/17/05
END: 1/17/05
G.S. ELEV. 1150.8

PROJECT NAME: Three Springs Drive Bridge — COUNTY: Brooke
STATE RTE. NO.: 13 — SECT.: - — SEGMENT: - — OFFSET: -
MILE POST / STATION: 108+56 — OFFSET / LANE: 8 LT

DEPTH (FT)	SAMPLE NO. AND TYPE/CORE RUN	BLOWS/0.5 FT. ON SAMPLER	RECOVERY (feet)	Recovery (%) / RQD (%)	POCKET PENET. or TORVANE (TSF)	USCS / AASHTO	SYMBOL	DESCRIPTION	REMARKS
25 — 26.0								INTERBEDDED SANDSTONE and SHALE - (cont.)	
	R-3		5.0	100 / 56				1122.8 — 28.0 LIMESTONE - Gray; Hard (HCSI=4); Freshly to Moderately Weathered; Thickly Bedded, RD= Indistinct; Closely to Widely Spaced Fracs, FRD=0° (Stratum RQD=67%)	
30 — 31.0								1118.8 — 32.0	
	R-4		4.0	100 / 65				CLAYSTONE - Gray; Soft (HCSI=2); Freshly Weathered; Thickly Bedded; Widely Spaced Fracs (Stratum RQD=53%)	
35 — 35.0								1115.8 — 35.0 BOH @ 35.0	
40									
45									
50									

S-7 (cont.)

3' 0 3'
1" = 3'-0"

REVISION NUMBER	SHEET NUMBER	REVISION	DATE	BY

THE WEST VIRGINIA DEPARTMENT OF TRANSPORTATION
DIVISION OF HIGHWAYS

THREE SPRINGS DRIVE BRIDGE REPLACEMENT

TEST BORING LOGS

HDR ENGINEERING, INC.
CONSULTING ENGINEERS
WEIRTON, WV (304) 748-8740

DESIGNED BY APR	DRAWN BY APR	CHECKED BY RLD	BRIDGE NO. 10565
DATE 06-05	DATE 06-05	DATE 08-05	SHEET NO. B48

FILE: n:\1436\bri dge\STR\B57_TSPR6.dgn

PUBLIC ROADS DIV.	STATE DIST. NO.	STATE PROJECT NO.	FEDERAL PROJECT NO.	FISCAL YEAR	COUNTY	SHEET NO.	TOTAL SHEETS
		B305-13 -0.02 00	BR-0013 (042)E	2006	BROOKE	122	163

HDR

ENGINEERS FIELD BORING LOG

BORING NO. S-8
SHEET 1 OF 2
DATE: START: 1/10/05
END: 1/10/05
G.S. ELEV. 1153.5

PROJECT NAME: Three Springs Drive Bridge — COUNTY: Brooke
STATE RTE. NO.: 13 — SECT.: - — SEGMENT: - — OFFSET: -
MILE POST / STATION: 108+65 — OFFSET / LANE: 35 RT
INSPECTOR (SIGNED): Dan Pulice — DRILLERS NAME/COMPANY: Paul Waddell / PA Drilling Co.
EQUIPMENT USED: CME 45 Truck Mount Rig
DRILLING METHODS: 3 1/4" ID HSA / SPT / NX Core Wireline
CASING: SIZE: 3 1/4" ID — DEPTH: 20.6 — WATER: DEPTH: 30.0 — TIME: 0 HR — DATE: 1/10/05
CHECKED BY: RLD — DATE: 3-3-05 — DEPTH: Caved — TIME: 24 HR — DATE: 1/11/05

DEPTH (FT.)	SAMPLE NO. AND TYPE/CORE RUN	BLOWS/6 FT. ON SAMPLER	RECOVERY (feet)	Recovery (%) / RQD (%)	POCKET PENET or TORVANE (TSF)	USCS / AASHTO	SYMBOL	DESCRIPTION	REMARKS
0									
1.5	S-1	1 2 2	0.9	60	N/A	ml/gm / a-1-b		GRAVELLY SILT (a-1-b) - Dark Brown; Moist; little clay	
5.0								1146.5 — 5.0	
6.5	S-2	7 6 4	1.0	67	N/A	gm / a-1-b		SILTY GRAVEL (a-1-b) - Gray; Dry; Loose	- weathered shale
1146.0 BOTTOM OF FTG ABUT 2									
10.0	S-3	19 14 6	1.5	100	N/A				- trace clay
11.5									
15.0	S-4	13 6 8	1.5	100	N/A				
16.5									
20.0	S-5	50 50/.1	0.6					1132.9 — 20.6	
20.6	R-1		2.4	100 / ---- / 100				SHALEY SANDSTONE - Gray; Hrd (HCSI=4); Sl-Fr Weath; V. Thin to Thin Bed, RD=0-20° ; V. Cl to Wide Spaced Fracs, FRD= 0-15° (Stratum RQD=82%)	
23.0	R-2		1.3	100 / ---- / 62				1128.5 — 24.0	- 23.6-23.8, vert. frac w/ iron stain
24.3									
25									

NOTE: N/A - Not Applicable due to the presence of granular material
24 HR water level: caved at 8.6'

S-8

HDR

ENGINEERS FIELD BORING LOG

BORING NO. S-8
SHEET 2 OF 2
DATE: START: 1/10/05
END: 1/10/05
G.S. ELEV. 1153.5

PROJECT NAME: Three Springs Drive Bridge — COUNTY: Brooke
STATE RTE. NO.: 13 — SECT.: - — SEGMENT: - — OFFSET: -
MILE POST / STATION: 108+65 — OFFSET / LANE: 35 RT

DEPTH (FT.)	SAMPLE NO. AND TYPE/CORE RUN	BLOWS/6 FT. ON SAMPLER	RECOVERY (feet)	Recovery (%) / RQD (%)	POCKET PENET or TORVANE (TSF)	USCS / AASHTO	SYMBOL	DESCRIPTION	REMARKS
25									
1127.5 EST PILE TIP ELEV ABUT 2	R-3		5.0	100 / ---- / 70				SILTY SHALE - Gray; Hard to Average (HCSI=4-3); Freshly to Slightly Weathered; Laminated to Very Thinly Bedded, RD= 0-15° ; Closely to Medium Spaced Fracs, FRD=0-15° (Stratum RQD=76%)	- Shale starts @ 24.0 - 23.0-25.0 gradual transition between Sandstone to Shale - 28.6-28.8, moderately weathered - 30.8, 25° frac w/ iron stains
28.3								1124.5 — 29.0	
30	R-4		2.5	93 / ---- / 67				LIMESTONE - Gray; Hard (HCSI=4); Freshly to Slightly Weathered; Indistict Bedding; V. Closely to Widely Spaced Fracs, FRD=0-90° (Stratum RQD=60%)	
32.0								1121.5 — 32.0	
35								BOH @ 32.0	
40									
45									
50									

S-8 (cont.)

3' 0 3'
1" = 3'-0"

REVISION NUMBER	SHEET NUMBER	REVISION	DATE	BY

THE WEST VIRGINIA DEPARTMENT OF TRANSPORTATION
DIVISION OF HIGHWAYS

THREE SPRINGS DRIVE BRIDGE REPLACEMENT

TEST BORING LOGS

HDR ENGINEERING, INC.
CONSULTING ENGINEERS
WEIRTON, WV (304) 748-8740

DESIGNED BY APR	DRAWN BY APR	CHECKED BY RLD	BRIDGE NO. 10565
DATE 06-05	DATE 06-05	DATE 08-05	SHEET NO. B49

FILE: r:\14361\bridges\STPcodR_3SPRT.dgn

PUBLIC ROADS DIV.	STATE DIST. NO.	STATE PROJECT NO.	FEDERAL PROJECT NO.	FISCAL YEAR	COUNTY	SHEET NO.	TOTAL SHEETS
W.V.	6	U305-13-0.02 00	BR-0013 (042)E	2006	BROOKE	123	163

INTERIOR GIRDER SECTION INFORMATION

LOCATION		MINIMUM SECTION DIMENSIONS									NON-COMPOSITE (GIRDER ONLY)		COMPOSITE FOR NEGATIVE MOMENT (GIRDER AND REINFORCEMENT STEEL)		3N COMPOSITE FOR POSITIVE MOMENT (GIRDER AND CONCRETE WITH 3N MOD. RATIO)		N COMPOSITE FOR POSITIVE MOMENT (GIRDER AND CONCRETE WITH N MODULAR RATIO)		DESIGN SERVICE MOMENT AND SHEAR				LLDF	
SPAN	SECTION LOCATIONS	TOP FLG WIDTH (IN)	TOP FLG THICKNESS (IN)	TOP FLG YIELD STR. (KSI)	BOTTOM FLG WIDTH (IN)	BOTTOM FLG THICKNESS (IN)	BOTTOM FLG YIELD STR. (KSI)	WEB DEPTH (IN)	WEB THICKNESS (IN)	WEB YIELD STR. (KSI)	S-TOP FLG (IN^3)	S-BOTTOM FLG (IN^3)	S-TOP FLG (IN^3)	S-BOTTOM FLG (IN^3)	S-TOP FLG (IN^3)	S-BOTTOM FLG (IN^3)	S-TOP FLG (IN^3)	S-BOTTOM FLG (IN^3)	DL1 MOMENT (K-FT)	DL1 SHEAR (K)	DL2 MOMENT (K-FT)	DL2 SHEAR (K)	MOMENT	SHEAR
1	A	18	1.000	50	20	1.000	50	54	0.500	50	1222	1298	1726	1407	3298	1566	8913	1699	0	98	0	33	0.771	1.029
1	1	18	1.000	50	20	1.000	50	54	0.500	50	1222	1298	1726	1407	3298	1566	8913	1699	1094	78	355	25	0.771	1.029
1	2	18	1.000	50	20	1.000	50	54	0.500	50	1222	1298	1726	1407	3298	1566	8913	1699	1948	59	609	16	0.771	1.029
1	B	18	1.000	50	20	1.000	50	54	0.500	50	1222	1298	1726	1407	3298	1566	8913	1699	2278	49	697	13	0.771	1.029
1	3	18	1.000	50	20	1.500	50	54	0.500	50	1285	1740	1796	1881	3354	2087	8531	2260	2560	39	763	8	0.791	1.029
1	4	18	1.000	50	20	1.500	50	54	0.500	50	1285	1740	1796	1881	3354	2087	8531	2260	2928	20	817	0	0.791	1.029
1	C,5	18	1.000	50	20	1.500	50	54	0.500	50	1285	1740	1796	1881	3354	2087	8531	2260	3050	0	772	8	0.791	1.029
1	6	18	1.000	50	20	1.500	50	54	0.500	50	1285	1740	1796	1881	3354	2087	8531	2260	2926	20	626	16	0.791	1.029
1	D	18	1.000	50	20	1.000	50	54	0.500	50	1222	1298	1726	1407	3298	1566	8913	1699	2638	36	430	22	0.771	1.029
1	7	18	1.000	50	20	1.000	50	54	0.500	50	1222	1298	1726	1407	3298	1566	8913	1699	2556	39	381	24	0.771	1.029
1	8	18	1.000	50	20	1.000	50	54	0.500	50	1222	1298	1726	1407	3298	1566	8913	1699	1945	59	35	32	0.771	1.029
1	9	18	1.000	50	20	1.000	50	54	0.500	50	1222	1298	1726	1407	3298	1566	8913	1699	1092	78	-410	40	0.798	1.029
1	E	18	1.000	50	20	1.000	50	54	0.500	50	1162	1287	1664	1402	3232	1565	8832	1700	0	97	-1003	47	0.798	1.029
2	F	16	1.000	50	20	1.000	50	54	0.500	50	1055	1263	1555	1391	3115	1564	8689	1701	0	73	-1003	41	0.798	1.029
2	1	16	1.000	50	20	1.000	50	54	0.500	50	1130	1280	1631	1398	3196	1565	8788	1700	614	58	-610	35	0.798	1.029
2	2	16	1.000	50	20	1.000	50	54	0.500	50	1130	1280	1631	1398	3196	1565	8788	1700	1091	44	-314	28	0.798	1.029
2	3	16	1.000	50	20	1.000	50	54	0.500	50	1130	1280	1631	1398	3196	1565	8788	1700	1432	29	-76	22	0.798	1.029
2	4	16	1.000	50	20	1.000	50	54	0.500	50	1130	1280	1631	1398	3196	1565	8788	1700	1637	15	106	16	0.831	1.029
2	G,5	16	1.000	50	20	1.000	50	54	0.500	50	1130	1280	1631	1398	3196	1565	8788	1700	1705	0	231	10	0.831	1.029
2	G,6	16	1.000	50	20	1.000	50	54	0.500	50	1130	1280	1631	1398	3196	1565	8788	1700	1637	15	298	5	0.831	1.029
2	7	16	1.000	50	20	1.000	50	54	0.500	50	1130	1280	1631	1398	3196	1565	8788	1700	1432	29	309	2	0.831	1.029
2	8	16	1.000	50	20	1.000	50	54	0.500	50	1130	1280	1631	1398	3196	1565	8788	1700	1091	44	263	8	0.831	1.029
2	9	16	1.000	50	20	1.000	50	54	0.500	50	1130	1280	1631	1398	3196	1565	8788	1700	614	58	161	14	0.831	1.029
2	H	16	1.000	50	20	1.000	50	54	0.500	50	1130	1280	1631	1398	3196	1565	8788	1700	0	73	0	20	0.831	1.029

NOTES:

1. IF SIGNIFIANT SECTION LOSS HAS OCCURED, RECALCULATE THE GIRDER SECTION PROPERTIES TO REFLECT THOSE LOSSES.
2. DL1 MOMENT AND SHEAR IS DUE TO WEIGHT OF STEEL GIRDERS, CROSSFRAMES AND DETAILS, STRUCTURAL DECK CONCRETE, HAUNCHES AND STAY-IN-PLACE FORMS. THESE FORCE EFFECTS ARE RESISTED BY THE NON-COMPOSITE GIRDER.
3. DL2 MOMENT AND SHEAR IS DUE TO WEIGHT OF BARRIER, RAILING, SIDEWALK, CLOSURE POUR AND FUTURE WEARING SURFACE. THESE FORCE EFFECTS ARE RESISTED BY THE COMPOSITE GIRDER.
4. LL+I MOMENT AND SHEAR PROVIDED ARE CRITICAL (MAXIMUM) FORCES AT THE SPECIFIC LOCATION INDICATED.
5. ASSUMED DEAD LOADS INCLUDE:
   A) STRUCTURAL STEEL SELF WEIGHT.
   B) DECK 8" TOTAL THICKNESS.
   C) 2½ INCHES x 20 INCHES NOMINAL CONCRETE HAUNCH = 55 PLF.
   D) S.I.P. FORMS + CONCRETE IN FORM VALLEYS = 15 PSF.
   E) TYPE F BARRIER = 335 PLF
      - DISTRIBUTED EVENLY TO G6 AND G7
      COMBO RAIL = 265 PLF
      - DISTRIBUTED EVENLY TO G1, G2 AND G3
      CLOSURE POUR = 420 PLF
      - DISTRIBUTED EVENLY TO G2, G3, G4 AND G5
      SIDEWALK = 655 PLF
      - DISTRIBUTED EVENLY TO G1, G2 AND G3
   F) FUTURE WEARING SURFACE = 25 PSF
      - DISTRIBUTED EVENLY TO ALL GIRDERS.
6. EFFECTIVE DECK THICKNESS FOR CALCULATION OF SECTION PROPERTIES = 8 - ¼" I.W.S. = 7¾".
7. COMPOSITE SECTION PROPERTIES BASED ON A DISTANCE OF 2½" FROM TOP OF WEB TO BOTTOM OF DECK
8. COMPOSITE SECTION PROPERTIES BASED ON AN EFFECTIVE SLAB WIDTH CALCULATED IN ACCORDANCE WITH THE STANDARD SPECIFICATION.

DESIGN MOMENTS AND SHEARS (LLDF = 1.0)

SPAN	SECTION LOCATIONS	H20 TRUCK		HS20 TRUCK/LANE		3S2 TRUCK		TYPE 3 TRUCK	
		LL+I MOMENT (K-FT)	LL+I SHEAR (K)	LL+I MOMENT (K-FT)	LL+I SHEAR (K)	LL+I MOMENT (K-FT)	LL+I SHEAR (K)	LL+I MOMENT (K-FT)	LL+I SHEAR (K)
1	A	0	73	0	78	0	71	0	55
1	1	697	61	842	68	748	61	599	48
1	2	1208	50	1426	59	1250	51	1016	42
1	B	1393	44	1622	53	1423	45	1159	38
1	3	1538	40	1764	48	1546	42	1266	35
1	4	1688	30	1879	39	1640	32	1375	29
1	C,5	1664	38	1880	43	1669	35	1336	30
1	6	1476	48	1682	51	1498	45	1170	38
1	D	1199	56	1396	57	1230	52	955	42
1	7	1128	57	1321	58	1163	54	902	43
1	8	634	67	838	67	697	62	570	49
1	9	-879	77	-879	77	-571	70	-433	53
1	E	-1746	88	-1746	88	-1019	76	-740	56
2	F	-1746	81	-1746	81	-1019	75	-740	58
2	1	-1275	73	-1275	76	-917	68	-666	53
2	2	-1067	64	-1067	69	-815	60	-592	49
2	3	-934	56	1048	62	864	52	764	44
2	4	1014	47	1283	52	1061	42	944	38
2	G,5	1124	40	1410	43	1194	32	1036	31
2	G,6	1126	32	1447	36	1238	28	1022	25
2	7	1018	37	1321	45	1141	37	891	32
2	8	798	45	1027	54	898	45	710	39
2	9	459	54	583	62	501	53	422	46
2	H	0	65	0	68	0	64	0	53

LOAD RATING FACTOR

RATING	H20	HS20	3S2	TYPE 3
INVENTORY (IR)	1.25	1.20	1.27	1.54
OPERATING (OR)	2.08	2.00	2.12	2.56

LOAD RATING TABLE (TONS)

RATING	H20	HS20	3S2	TYPE 3
INVENTORY (IR)	25.0	43.3	45.8	38.4
OPERATING (OR)	41.6	72.1	76.3	64.1

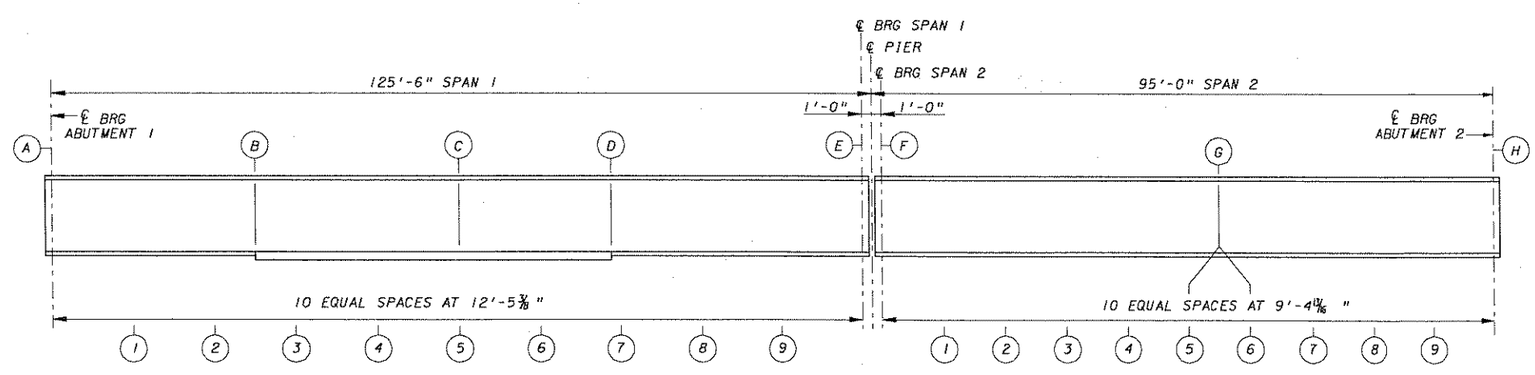

GIRDER ELEVATION

NO SCALE

REVISION NUMBER	SHEET NUMBER	REVISION	DATE	BY

THE WEST VIRGINIA DEPARTMENT OF TRANSPORTATION
DIVISION OF HIGHWAYS

THREE SPRINGS DRIVE BRIDGE REPLACEMENT

INTERIOR GIRDER RATING TABLE

HDR ENGINEERING, INC.
CONSULTING ENGINEERS
WEIRTON, WV (304) 748-8740

DESIGNED BY ANC DATE 06-05 | DRAWN BY BJS DATE 06-05 | CHECKED BY JWB DATE 08-05 | BRIDGE NO. 10565 | SHEET NO. B50

FILE:H:\1436\DT dgn\STR_HAT_3SPR1.DGN

PUBLIC ROADS DIV.	STATE DIST. NO.	STATE PROJECT NO.	FEDERAL PROJECT NO.	FISCAL YEAR	COUNTY	SHEET NO.	TOTAL SHEETS
W.V.	6	U305-13 -0.02 00	BR-0013 (042)E	2006	BROOKE	124	163

NOTES:

1. FOR NOTES, SEE INTERIOR GIRDER RATING SHEET B50.

EXTERIOR GIRDER SECTION INFORMATION

LOCATION		MINIMUM SECTION DIMENSIONS									NON-COMPOSITE (GIRDER ONLY)		COMPOSITE FOR NEGATIVE MOMENT (GIRDER AND REINFORCEMENT STEEL)		3N COMPOSITE FOR POSITIVE MOMENT (GIRDER AND CONCRETE WITH 3N MOD. RATIO)		N COMPOSITE FOR POSITIVE MOMENT (GIRDER AND CONCRETE WITH N MODULAR RATIO)		DESIGN SERVICE MOMENT AND SHEAR				LLDF	
SPAN	SECTION LOCATIONS	TOP FLG WIDTH (IN)	TOP FLG THICKNESS (IN)	TOP FLG YIELD STR. (KSI)	BOTTOM FLG WIDTH (IN)	BOTTOM FLG THICKNESS (IN)	BOTTOM FLG YIELD STR. (KSI)	WEB DEPTH (IN)	WEB THICKNESS (IN)	WEB YIELD STR. (KSI)	S-TOP FLG (IN^3)	S-BOTTOM FLG (IN^3)	S-TOP FLG (IN^3)	S-BOTTOM FLG (IN^3)	S-TOP FLG (IN^3)	S-BOTTOM FLG (IN^3)	S-TOP FLG (IN^3)	S-BOTTOM FLG (IN^3)	DL1 MOMENT (K-FT)	DL1 SHEAR (K)	DL2 MOMENT (K-FT)	DL2 SHEAR (K)	MOMENT	SHEAR
1	A	18	1.000	50	20	1.000	50	54	0.500	50	1222	1298	1679	1400	3092	1553	7992	1689	0	79	0	27	0.896	0.896
1	1	18	1.000	50	20	1.000	50	54	0.500	50	1222	1298	1679	1400	3092	1553	7992	1689	890	64	297	21	0.896	0.896
1	2	18	1.000	50	20	1.000	50	54	0.500	50	1222	1298	1679	1400	3092	1553	7992	1689	1586	48	511	14	0.896	0.896
1	B	18	1.000	50	20	1.000	50	54	0.500	50	1222	1298	1679	1400	3092	1553	7992	1689	1855	40	584	11	0.896	0.896
1	3	18	1.000	50	20	1.500	50	54	0.500	50	1285	1740	1749	1871	3152	2070	7721	2247	2085	32	640	7	0.896	0.896
1	4	18	1.000	50	20	1.500	50	54	0.500	50	1285	1740	1749	1871	3152	2070	7721	2247	2385	16	685	0	0.896	0.896
1	C,5	18	1.000	50	20	1.500	50	54	0.500	50	1285	1740	1749	1871	3152	2070	7721	2247	2484	0	647	7	0.896	0.896
1	6	18	1.000	50	20	1.500	50	54	0.500	50	1285	1740	1749	1871	3152	2070	7721	2247	2383	16	525	13	0.896	0.896
1	D	18	1.000	50	20	1.000	50	54	0.500	50	1222	1298	1679	1400	3092	1553	7992	1689	2147	29	360	19	0.896	0.896
1	7	18	1.000	50	20	1.000	50	54	0.500	50	1222	1298	1679	1400	3092	1553	7992	1689	2081	32	319	20	0.896	0.896
1	8	18	1.000	50	20	1.000	50	54	0.500	50	1222	1298	1679	1400	3092	1553	7992	1689	1582	48	28	27	0.896	0.896
1	9	18	1.000	50	20	1.000	50	54	0.500	50	1222	1298	1679	1400	3092	1553	7992	1689	889	64	-346	34	0.896	0.896
1	E	18	1.000	50	20	1.000	50	54	0.500	50	1162	1287	1618	1393	3026	1553	7914	1690	0	79	-843	41	0.896	0.896
2	F	16	1.000	50	20	1.000	50	54	0.500	50	1055	1263	1509	1382	2910	1551	7774	1691	0	59	-843	34	0.896	0.896
2	1	16	1.000	50	20	1.000	50	54	0.500	50	1130	1280	1585	1390	2991	1552	7871	1690	498	47	-513	29	0.896	0.896
2	2	16	1.000	50	20	1.000	50	54	0.500	50	1130	1280	1585	1390	2991	1552	7871	1690	885	35	-265	23	0.896	0.896
2	3	16	1.000	50	20	1.000	50	54	0.500	50	1130	1280	1585	1390	2991	1552	7871	1690	1162	24	-64	19	0.896	0.896
2	4	16	1.000	50	20	1.000	50	54	0.500	50	1130	1280	1585	1390	2991	1552	7871	1690	1328	12	88	14	0.896	0.896
2	G,5	16	1.000	50	20	1.000	50	54	0.500	50	1130	1280	1585	1390	2991	1552	7871	1690	1383	0	193	9	0.896	0.896
2	G,6	16	1.000	50	20	1.000	50	54	0.500	50	1130	1280	1585	1390	2991	1552	7871	1690	1328	12	250	4	0.896	0.896
2	7	16	1.000	50	20	1.000	50	54	0.500	50	1130	1280	1585	1390	2991	1552	7871	1690	1162	24	259	2	0.896	0.896
2	8	16	1.000	50	20	1.000	50	54	0.500	50	1130	1280	1585	1390	2991	1552	7871	1690	885	35	220	7	0.896	0.896
2	9	16	1.000	50	20	1.000	50	54	0.500	50	1130	1280	1585	1390	2991	1552	7871	1690	498	47	135	12	0.896	0.896
2	H	16	1.000	50	20	1.000	50	54	0.500	50	1130	1280	1585	1390	2991	1552	7871	1690	0	59	0	16	0.896	0.896

DESIGN MOMENTS AND SHEARS (LLDF = 1.0)

SPAN	SECTION LOCATIONS	H20 TRUCK		HS20 TRUCK/LANE		3S2 TRUCK		TYPE 3 TRUCK	
		LL+I MOMENT (K-FT)	LL+I SHEAR (K)	LL+I MOMENT (K-FT)	LL+I SHEAR (K)	LL+I MOMENT (K-FT)	LL+I SHEAR (K)	LL+I MOMENT (K-FT)	LL+I SHEAR (K)
1	A	0	73	0	78	0	71	0	55
1	1	697	61	842	68	748	61	599	48
1	2	1208	50	1426	59	1250	51	1016	42
1	B	1393	44	1622	53	1423	45	1159	38
1	3	1538	40	1764	48	1546	42	1266	35
1	4	1688	30	1879	39	1640	32	1375	29
1	C,5	1664	38	1880	43	1669	35	1336	30
1	6	1476	48	1682	51	1498	45	1170	38
1	D	1199	56	1396	57	1230	52	955	42
1	7	1128	57	1321	58	1163	54	902	43
1	8	634	67	838	67	697	62	570	49
1	9	-879	77	-879	77	-571	70	-433	53
1	E	-1746	88	-1746	88	-1019	76	-740	56
2	F	-1746	81	-1746	81	-1019	75	-740	58
2	1	-1275	73	-1275	76	-917	68	-666	53
2	2	-1067	64	-1067	69	-815	60	-592	49
2	3	-934	56	1048	62	864	52	764	44
2	4	1014	47	1283	52	1061	42	944	38
2	G,5	1124	40	1410	43	1194	32	1036	31
2	G,6	1126	32	1447	36	1238	28	1022	25
2	7	1018	37	1321	45	1141	37	891	32
2	8	798	45	1027	54	898	45	710	39
2	9	459	54	583	62	501	53	422	46
2	H	0	65	0	68	0	64	0	53

LOAD RATING FACTOR

RATING	H20	HS20	3S2	TYPE 3
INVENTORY (IR)	1.37	1.37	1.65	2.01
OPERATING (OR)	2.29	2.29	2.75	3.34

LOAD RATING TABLE (TONS)

RATING	H20	HS20	3S2	TYPE 3
INVENTORY (IR)	27.4	49.4	59.4	50.2
OPERATING (OR)	45.7	82.3	98.9	83.6

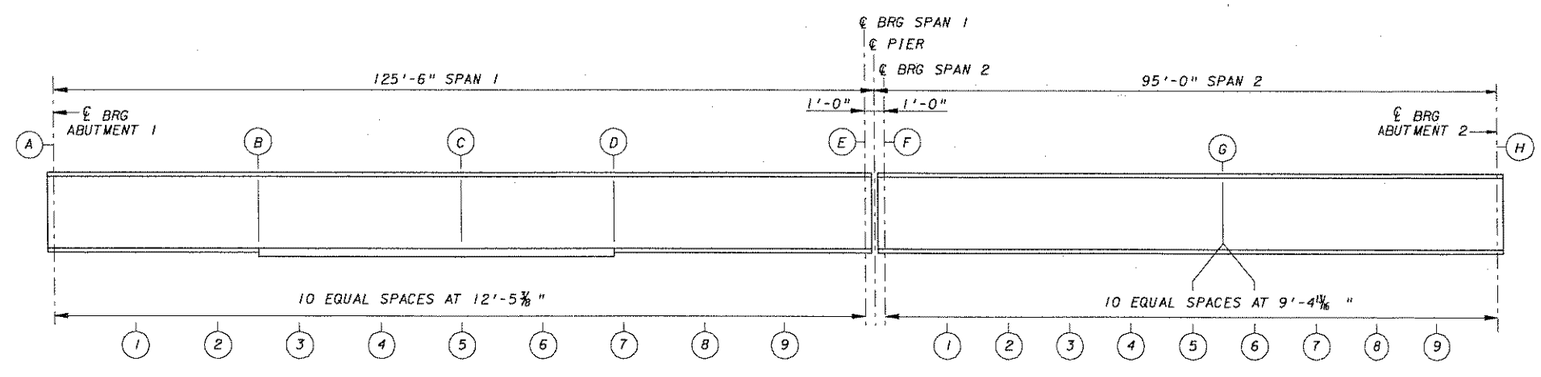

GIRDER ELEVATION

NO SCALE

THE WEST VIRGINIA DEPARTMENT OF TRANSPORTATION
DIVISION OF HIGHWAYS

THREE SPRINGS DRIVE BRIDGE REPLACEMENT

EXTERIOR GIRDER RATING TABLE

HDR ENGINEERING, INC.
CONSULTING ENGINEERS
WEIRTON, WV
(304) 748-8740

REVISION NUMBER	SHEET NUMBER	REVISION	DATE	BY

DESIGNED BY ANC	DRAWN BY BJS	CHECKED BY JWB	BRIDGE NO. 10565
DATE 06-05	DATE 06-05	DATE 06-05	SHEET NO. B51

FILEx:\14361\bridge\STR_RAT_3SPR2.dgn

PARCEL NO.	PLAN SHEET NO.	TITLEHOLDER	RECORDED DEED BOOK	RECORDED PAGE NO.	TRACT NO.	AREA - Sq. Ft. (Unless noted otherwise) C/A	NON-C/A	EASEMENT TYPE	EASEMENT AREA	REMAINING LEFT	REMAINING RIGHT	REMAINING TOTAL	TOTAL TAKEN	PARCEL TOTAL	REMARKS	R/W DEED RECORD DEED BOOK	R/W DEED RECORD PAGE NO.
1	RS01,RS02	XG HOTEL PARTNERS, LLC	277	230			16,156			4.95 AC		4.95 AC	16,156	5.32 AC	DEED AREA INCLUDES 2880 S.F. OF		
													(0.37 AC)		EXISTING P.D.E.		
2	RS03	TRUSTEES OF THE ST. THOMAS PROTESTANT EPISCOPAL CHURCH	167	289			2,413			1.53 AC		1.53 AC	2,413	1.59 AC (C)	DEED AREA = 2.00 AC; LESS PROPERTY		
													(0.06 AC)		OUTSALES OF LOTS 1 & 2		
															SUBDIVIDED; **0.09 AC ADDED FOR GAP		
															BETWEEN R/W AND PROPERTY LINE		
3	RS01-RS02	COMCAST													PRIVATE UTILITY (CABLE TV)		

**SEE PROPERTY DISCREPANCY REPORT IN DEEDS AND QUESTIONNAIRE FOR PARCEL 2.

PUBLIC ROADS DIV.	STATE DIST. NO.	STATE PROJECT NO.	FEDERAL PROJECT NO.	FISCAL YEAR	COUNTY	SHEET NO.	TOTAL SHEETS
W.V.	6	U305-13-0.02 00	BR-0013 (042)E	2006	BROOKE	125	163

UTILITIES

STATION	SHEET NO.	DESCRIPTION	DISPOSITION
MONONGAHELA POWER COMPANY, A DIVISION OF ALLEGHENY POWER			
110+97 LT. TO 116+50 LT.	RS02,RS03	POWER LINE	TO BE RELOCATED
MOUNTAINEER GAS COMPANY dba ALLEGHENY POWER			
111+90 RT. TO 114+00	RS03	GAS LINE	TO REMAIN IN PLACE
111+98	RS03	GAS SERVICE LINE	TO BE RELOCATED
113+45	RS03	GAS SERVICE LINE	TO BE RELOCATED
VERIZON WEST VIRGINIA, INC.			
105+00 LT. TO 106+00 LT.	RS02	UNDERGROUND TELEPHONE LINE	TO BE RELOCATED
106+00 LT. TO 116+50 LT.	RS02,RS03	TELEPHONE LINE	TO BE RELOCATED

REVISION NUMBER	SHEET NUMBER	REVISION	DATE	BY

THE WEST VIRGINIA DEPARTMENT OF TRANSPORTATION
DIVISION OF HIGHWAYS

OWNERSHIP & UTILITY INDEX

HDR ENGINEERING, INC.
CONSULTING ENGINEERS
WEIRTON, WV (304) 748-8740

Q.C. CHECKED WWK DATE 12/05 P.M. CHECKED SAB DATE 12/05

DATE: 12/13/2005
FILE: x:\1436tvrdy_own_3508tc01.dgn DATE: 12/13/2005
FILE: x:\1436tvrdy_own_3508tc01.dgn

PUBLIC ROADS DIV.	STATE DIST. NO.	STATE PROJECT NO.	FEDERAL PROJECT NO.	FISCAL YEAR	COUNTY	SHEET NO.	TOTAL SHEETS
W.V.	6	U305-13 -0.02 00	BR-0013 (042)E	2006	BROOKE	126	163

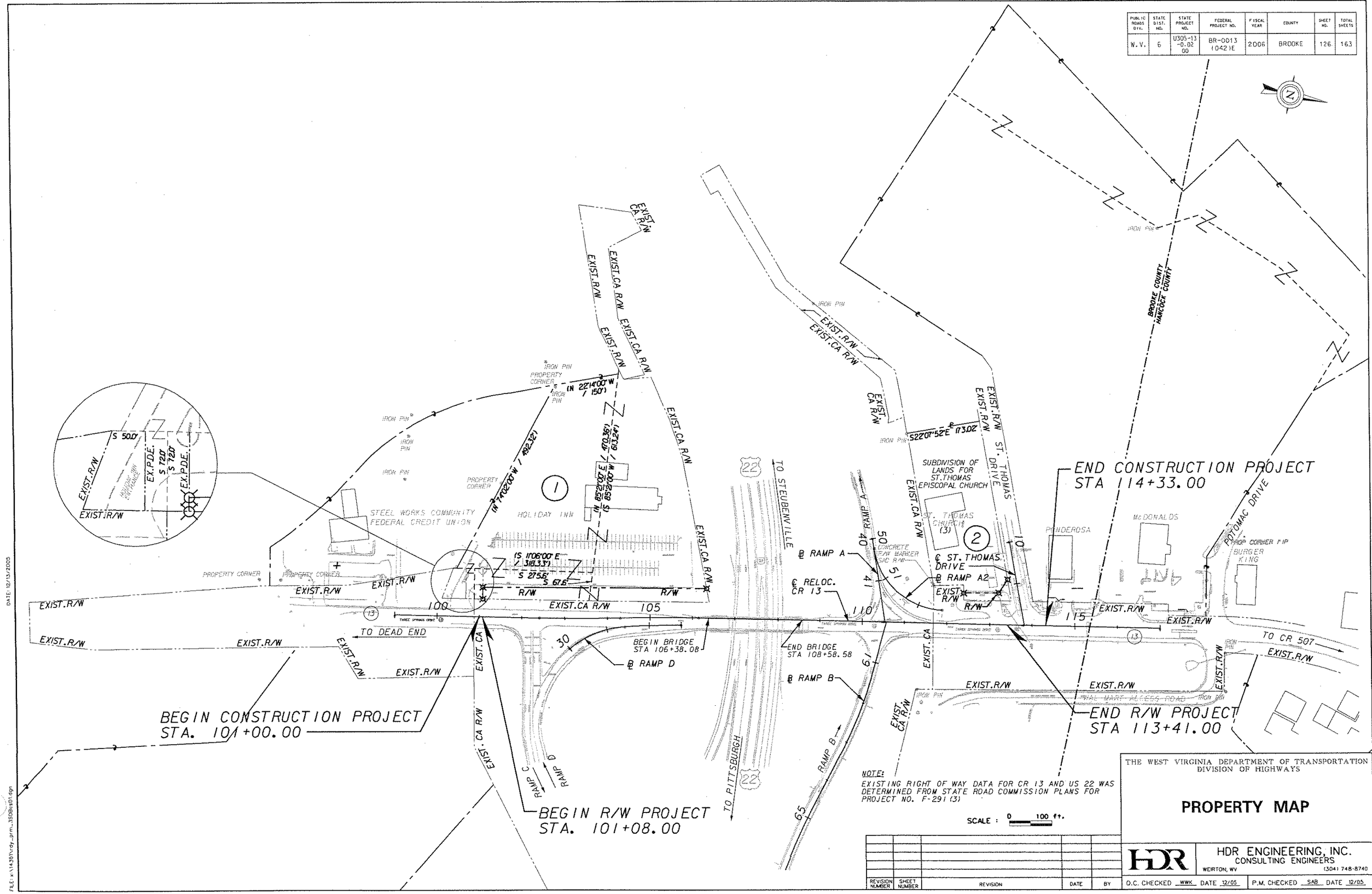

NOTE:
EXISTING RIGHT OF WAY DATA FOR CR 13 AND US 22 WAS DETERMINED FROM STATE ROAD COMMISSION PLANS FOR PROJECT NO. F-291 (3)

THE WEST VIRGINIA DEPARTMENT OF TRANSPORTATION
DIVISION OF HIGHWAYS

PROPERTY MAP

HDR ENGINEERING, INC.
CONSULTING ENGINEERS
WEIRTON, WV (304) 748-8740

REVISION NUMBER	SHEET NUMBER	REVISION	DATE	BY

O.C. CHECKED WWK DATE 12/05 P.M. CHECKED SAB DATE 12/05

DATE: 12/13/2005

FILE: x:\14391\rdy_prm_3508es01.dgn

PUBLIC ROADS DIV.	STATE DIST. NO.	STATE PROJECT NO.	FEDERAL PROJECT NO.	FISCAL YEAR	COUNTY	SHEET NO.	TOTAL SHEETS
W.V.	6	U305-13 -0.02 00	BR-0013 (042)E	2006	BROOKE	61	163

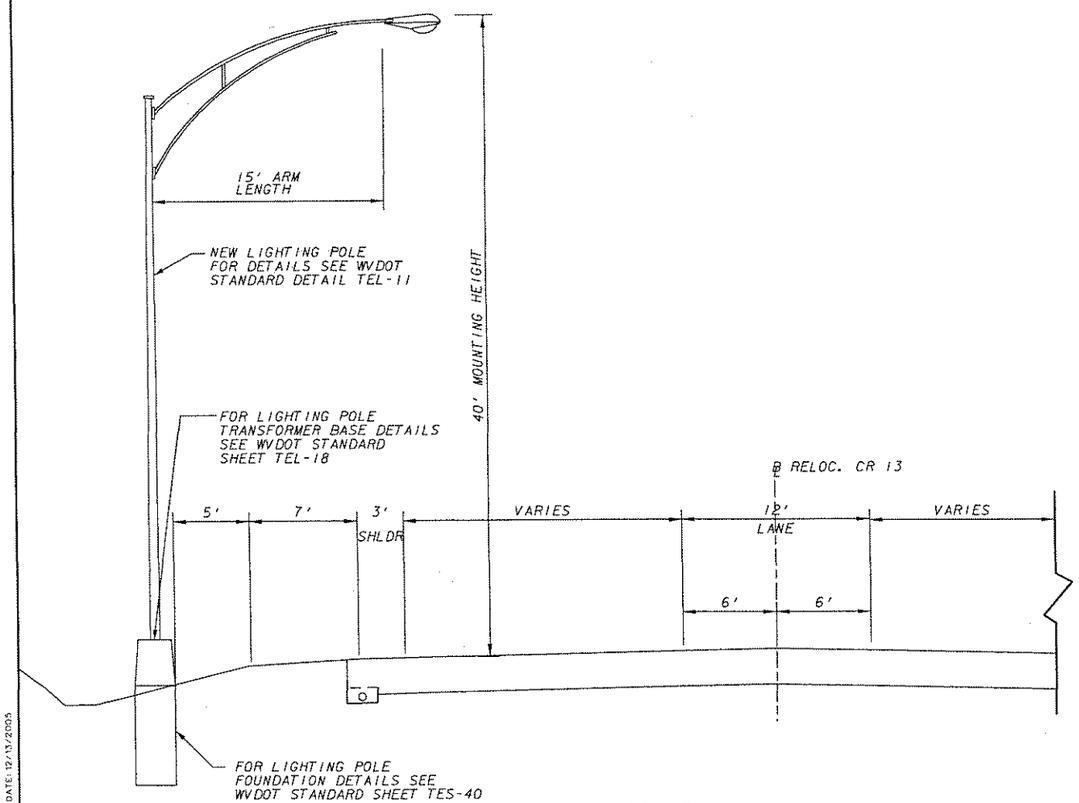

CR 13
TYPICAL CROSS SECTION

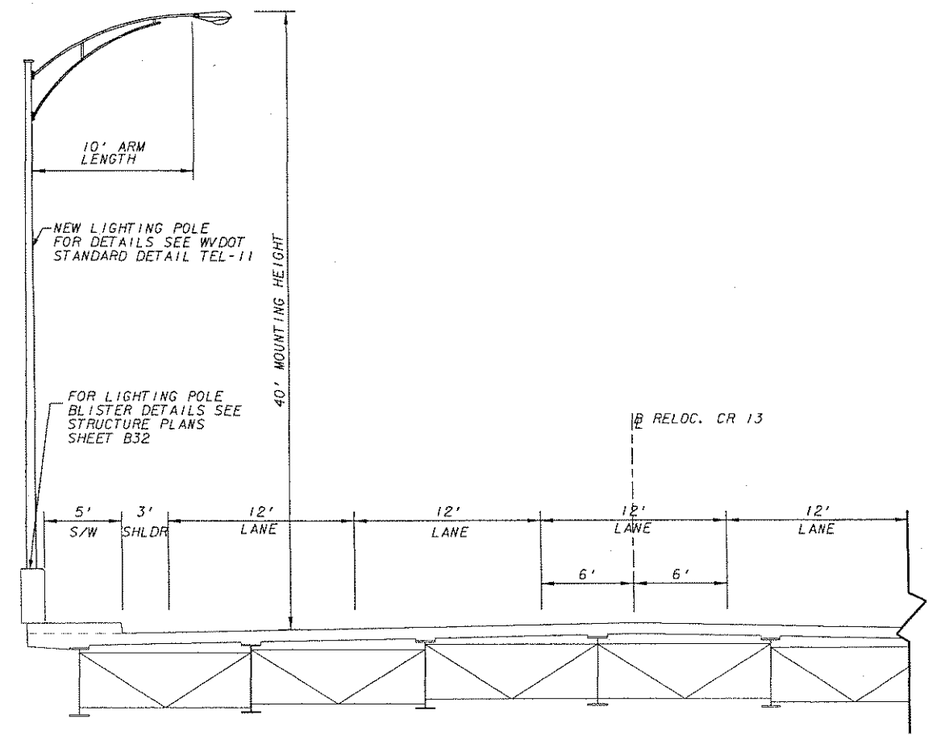

CR 13 BRIDGE
TYPICAL CROSS SECTION

L-4

THE WEST VIRGINIA DEPARTMENT OF TRANSPORTATION
DIVISION OF HIGHWAYS

LIGHTING TYPICAL SECTIONS AND LIGHTING ANALYSIS

HDR ENGINEERING, INC.
CONSULTING ENGINEERS
WEIRTON, WV (304) 748-8740

REVISION NUMBER	SHEET NUMBER	REVISION	DATE	BY

Q.C. CHECKED JBI DATE 12/05 P.M. CHECKED SAB DATE 12/05

DATE: 12/13/2005

FILE: x:\14367\rf_61_350804.dgn

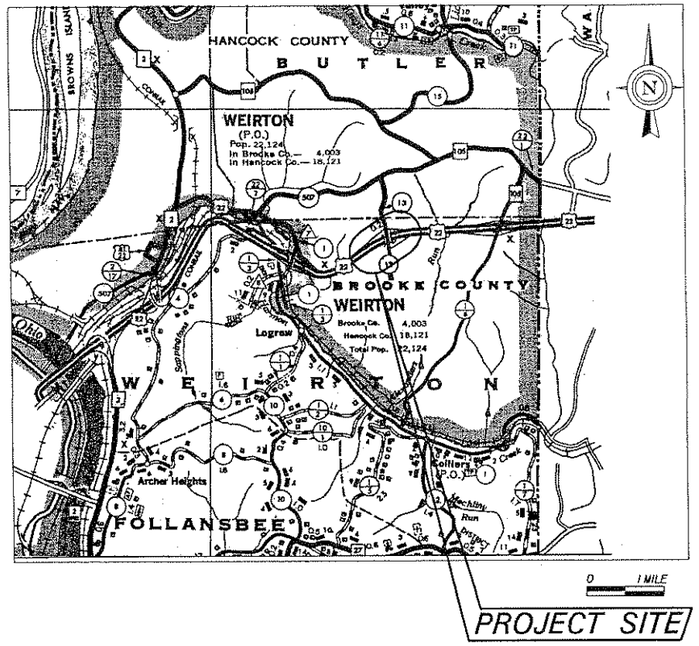

WEST VIRGINIA
DEPARTMENT OF TRANSPORTATION
DIVISION OF HIGHWAYS

SOIL AND GEOLOGICAL PLANS
OF
STATE HIGHWAY

FEDERAL PROJECT NO. U305-13-0.02 00

STATE PROJECT NO. BR-0013(042)E

COUNTY ROUTE 13
THREE SPRINGS DRIVE BRIDGE

WEIRTON DISTRICT, (BROOKE COUNTY)

PUBLIC ROADS DIV.	STATE DIST. NO.	STATE PROJECT NO.	FEDERAL PROJECT NO.	FISCAL YEAR	COUNTY	SHEET NO.	TOTAL SHEETS
W.V.	6	U305-13 -0.02 00	BR-0013 (042)E	2006	BROOKE	62	163

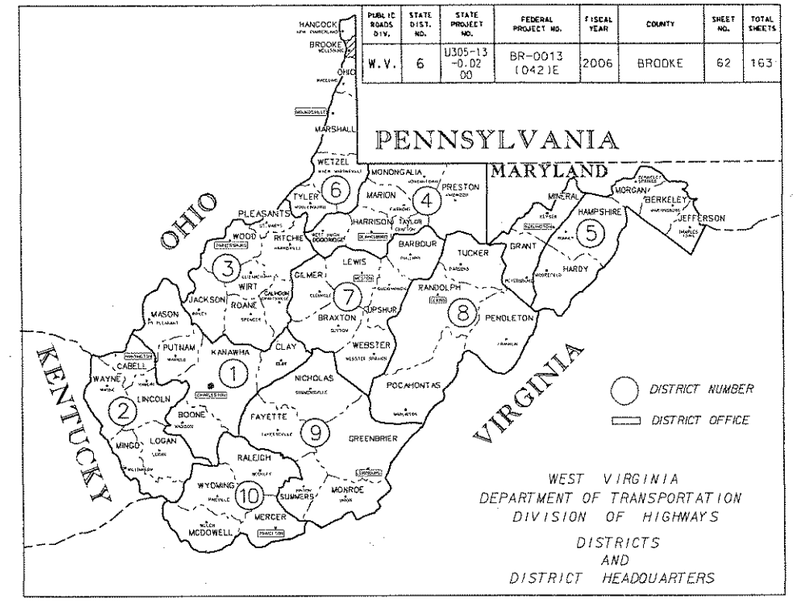

MINERALOGICAL DESCRIPTION OF ROCK AND SHALE

A =ARENACEOUS (SANDY)
L =CALCAREOUS (LIMEY)
C =ARGILLACEOUS (CLAYEY)
X =CARBONACEOUS

ROCK AND SHALE RESISTANCE TO DRILLING

ES =EXTREMELY SOFT
VS =VERY SOFT
S =SOFT
M =MEDIUM
MH =MODERATELY HARD
H =HARD
VH =VERY HARD

SOIL RESISTANCE TO DRILLING

GRANULAR	COHESIVE
VL =VERY LOOSE	VS =VERY SOFT
L =LOOSE	S =SOFT
MD =MEDIUM DENSE	MST =MEDIUM STIFF
D =DENSE	ST =STIFF
VD =VERY DENSE	VST =VERY STIFF
	H =HARD
	VH =VERY HARD

RQD= ROCK QUALITY DESIGNATION. THE TOTAL LENGTH OF CORE RECOVERED BY COUNTING ONLY THOSE PIECES OF CORE WHICH ARE 4 INCHES IN LENGTH OR LONGER AND WHICH ARE HARD AND SOUND. EXPRESSED AS A PERCENTAGE OF THE TOTAL STRATUM THICKNESS.

LEGEND OF SYMBOLS USED ON SOIL PROFILE

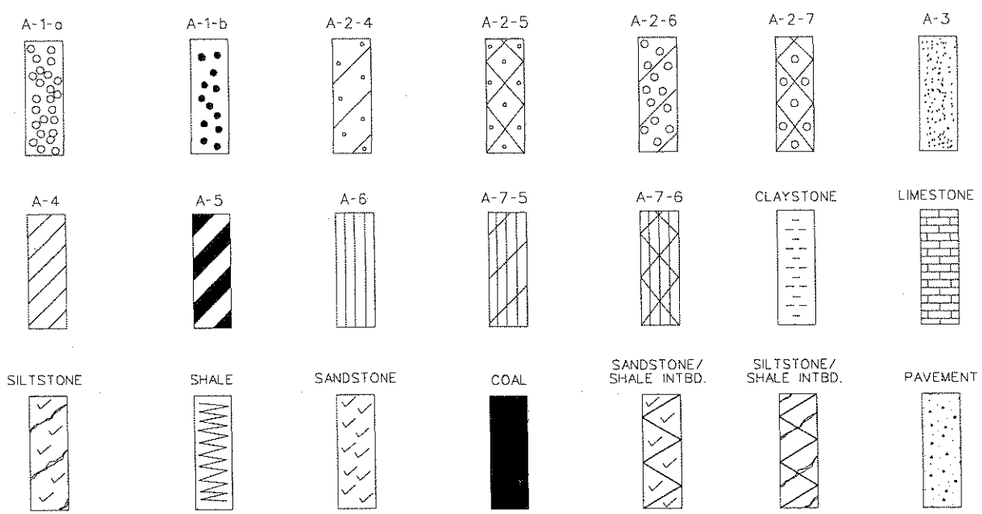

BATTER — 1:2 — BORING — NON-PLASTIC NP

GROUND WATER — W — LEVEL — MOISTURE CONTENT ABOVE PLASTIC LIMIT +PL

CORE — BORING — MOISTURE CONTENT ABOVE LIQUID LIMIT +LL

PREVIOUS — BORING — MOISTURE CONTENT BELOW PLASTIC LIMIT -PL

PROPOSED — WALLS

OUTCROP LOCATION — G-1 — (NUMBERS INDICATE OUTCROPS WHICH WERE SURVEYED AND LOGGED.)

SPRING OR NOTABLE SEEPAGE

TYPICAL PRESENTATION OF BORING DATA

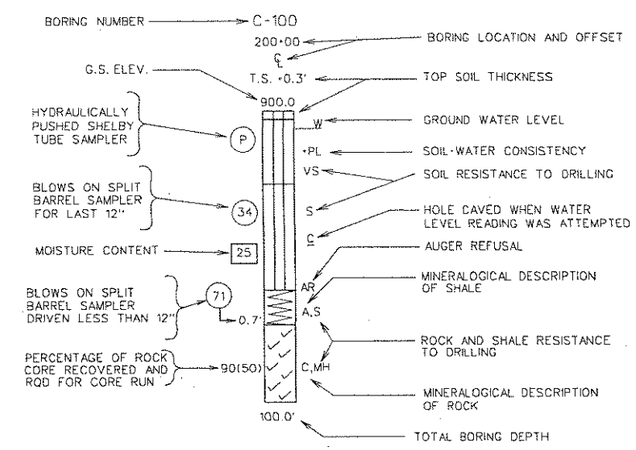

NOTE: ELAPSED TIME FROM HOLE COMPLETION TO GROUND WATER READING, OR CAVED HOLE, IS 24 HOURS UNLESS OTHERWISE NOTED. ALL READINGS ARE IN HOURS.

FFS - FILLED FOR SAFETY

PROJECT NO. U305-13-0.02 00, BR-0013 (042) E

FILE: X:\14361\geo_tit_35\root\ DATE: 12/13/2005 AS=

PUBLIC ROADS DIV.	STATE DIST. NO.	STATE PROJECT NO.	FEDERAL PROJECT NO.	FISCAL YEAR	COUNTY	SHEET NO.	TOTAL SHEETS
W.V.	6	U305-13 -0.02 00	BR-0013 (042)E	2006	BROOKE	63	163

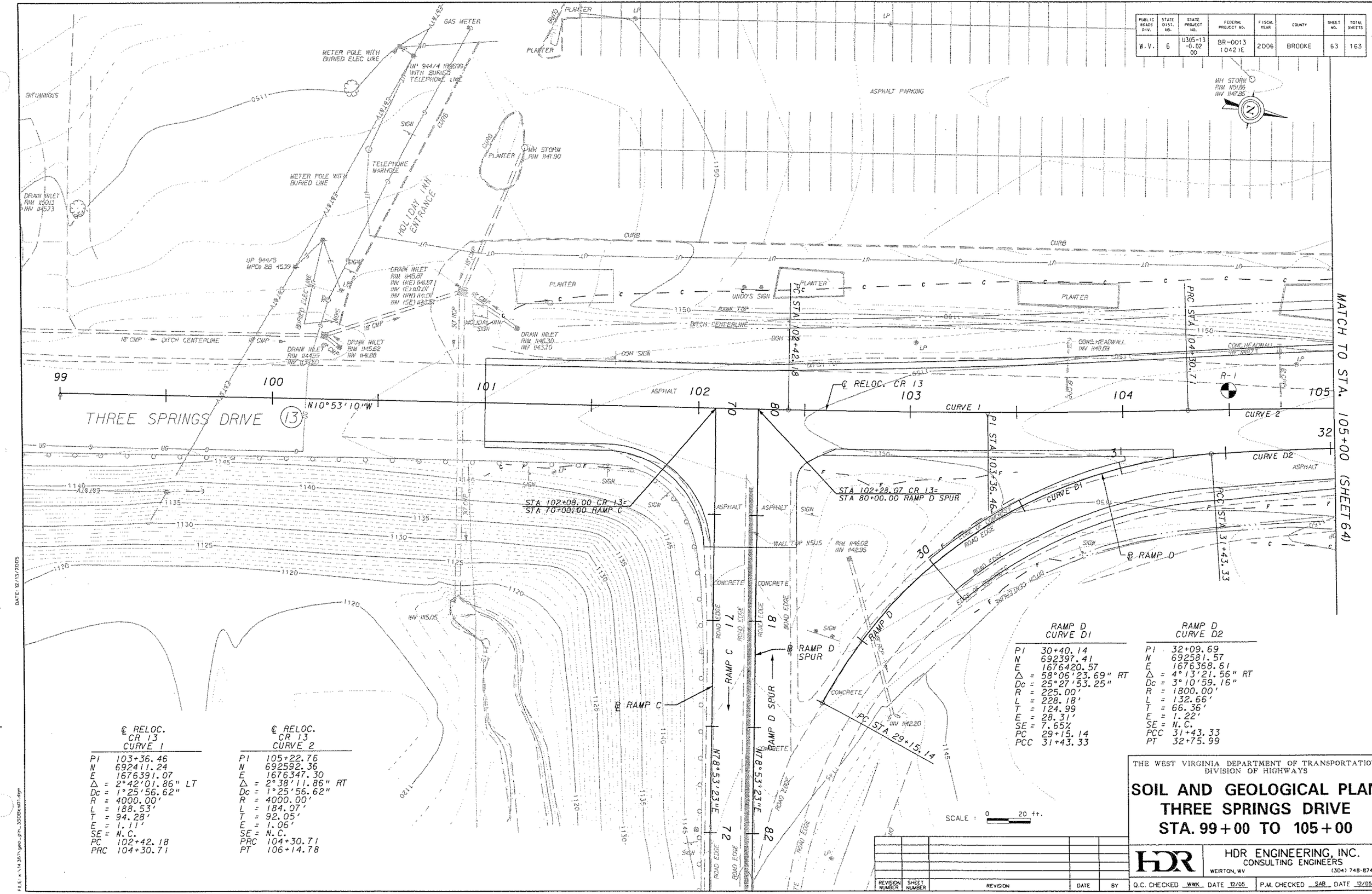

DATE: 12/13/2005

FILE: x:\14361\geo_pln_3508c401.dgn

℄ RELOC. CR 13 CURVE 1	
PI	103+36.46
N	692411.24
E	1676391.07
Δ =	2°42'01.86" LT
Dc =	1°25'56.62"
R =	4000.00'
L =	188.53'
T =	94.28'
E =	1.11'
SE =	N.C.
PC	102+42.18
PRC	104+30.71

℄ RELOC. CR 13 CURVE 2	
PI	105+22.76
N	692592.36
E	1676347.30
Δ =	2°38'11.86" RT
Dc =	1°25'56.62"
R =	4000.00'
L =	184.07'
T =	92.05'
E =	1.06'
SE =	N.C.
PRC	104+30.71
PT	106+14.78

RAMP D CURVE D1	
PI	30+40.14
N	692397.41
E	1676420.57
Δ =	58°06'23.69" RT
Dc =	25°27'53.25"
R =	225.00'
L =	228.18'
T =	124.99
E =	28.31'
SE =	7.65%
PC	29+15.14
PCC	31+43.33

RAMP D CURVE D2	
PI	32+09.69
N	692581.57
E	1676368.61
Δ =	4°13'21.56" RT
Dc =	3°10'59.16"
R =	1800.00'
L =	132.66'
T =	66.36'
E =	1.22'
SE =	N.C.
PCC	31+43.33
PT	32+75.99

THE WEST VIRGINIA DEPARTMENT OF TRANSPORTATION
DIVISION OF HIGHWAYS

SOIL AND GEOLOGICAL PLAN
THREE SPRINGS DRIVE
STA. 99+00 TO 105+00

HDR ENGINEERING, INC.
CONSULTING ENGINEERS
WEIRTON, WV (304) 748-8740

REVISION NUMBER	SHEET NUMBER	REVISION	DATE	BY

Q.C. CHECKED WWK DATE 12/05 P.M. CHECKED SAB DATE 12/05

PUBLIC ROADS DIV.	STATE DIST. NO.	STATE PROJECT NO.	FEDERAL PROJECT NO.	FISCAL YEAR	COUNTY	SHEET NO.	TOTAL SHEETS
W.V.	6	U305-13-0.02 00	BR-0013 (042)E	2006	BROOKE	64	163

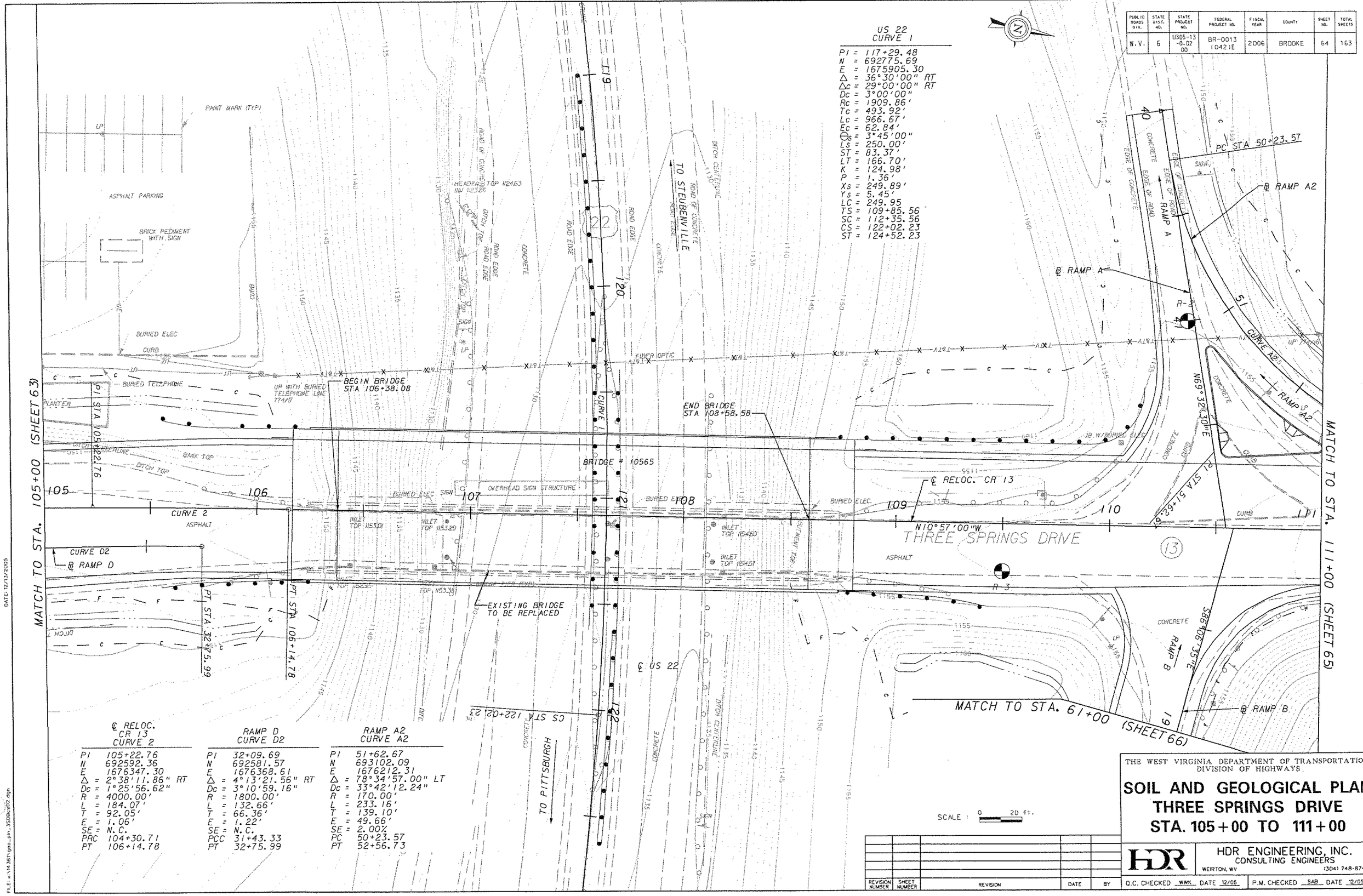

℄ RELOC. CR 13 CURVE 2		RAMP D CURVE D2		RAMP A2 CURVE A2	
PI	105+22.76	PI	32+09.69	PI	51+62.67
N	692592.36	N	692581.57	N	693102.09
E	1676347.30	E	1676368.61	E	1676212.31
Δ =	2°38'11.86" RT	Δ =	4°13'21.56" RT	Δ =	78°34'57.00" LT
Dc =	1°25'56.62"	Dc =	3°10'59.16"	Dc =	33°42'12.24"
R =	4000.00'	R =	1800.00'	R =	170.00'
L =	184.07'	L =	132.66'	L =	233.16'
T =	92.05'	T =	66.36'	T =	139.10'
E =	1.06'	E =	1.22'	E =	49.66'
SE =	N.C.	SE =	N.C.	SE =	2.00%
PRC	104+30.71	PCC	31+43.33	PC	50+23.57
PT	106+14.78	PT	32+75.99	PT	52+56.73

REVISION NUMBER	SHEET NUMBER	REVISION	DATE	BY

THE WEST VIRGINIA DEPARTMENT OF TRANSPORTATION
DIVISION OF HIGHWAYS

SOIL AND GEOLOGICAL PLAN
THREE SPRINGS DRIVE
STA. 105+00 TO 111+00

HDR ENGINEERING, INC.
CONSULTING ENGINEERS
WERTON, WV (304) 748-8740

Q.C. CHECKED WWK DATE 12/05 | P.M. CHECKED SAB DATE 12/05

DATE: 12/13/2005

FILE: x:\14361\geo_pln_3508rest12.dgn

PUBLIC ROADS DIV.	STATE DIST. NO.	STATE PROJECT NO.	FEDERAL PROJECT NO.	FISCAL YEAR	COUNTY	SHEET NO.	TOTAL SHEETS
W.V.	6	U305-13 -0.02 00	BR-0013 (042)E	2006	BROOKE	65	163

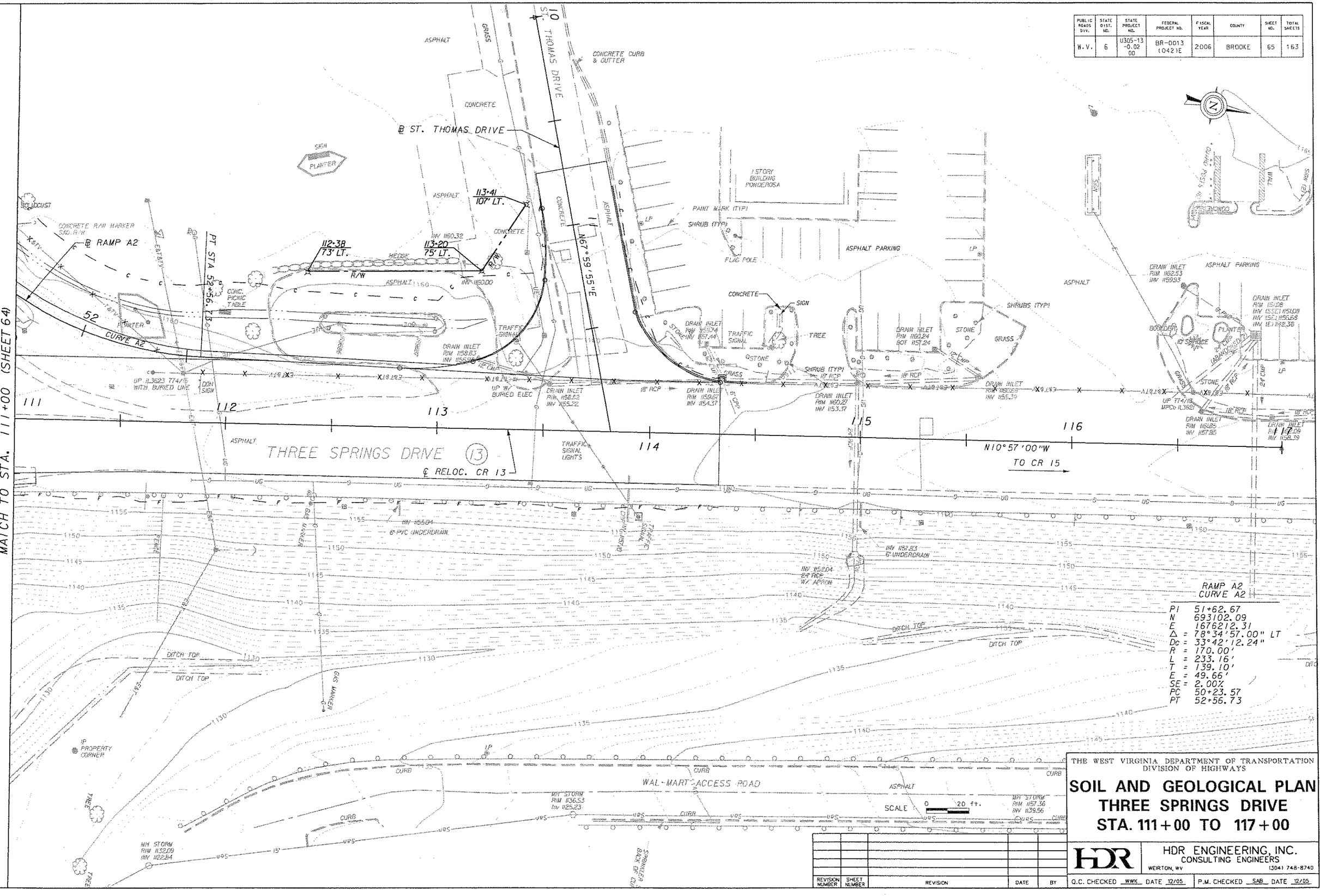

THE WEST VIRGINIA DEPARTMENT OF TRANSPORTATION
DIVISION OF HIGHWAYS

SOIL AND GEOLOGICAL PLAN
THREE SPRINGS DRIVE
STA. 111+00 TO 117+00

HDR ENGINEERING, INC.
CONSULTING ENGINEERS
WEIRTON, WV (304) 748-8740

REVISION NUMBER	SHEET NUMBER	REVISION	DATE	BY

Q.C. CHECKED WWK DATE 12/05 P.M. CHECKED SAB DATE 12/05

DATE: 12/13/2005

FILE: x:\14-36\?gres_pfl_3SDBE-03.dgn

PUBLIC ROADS DIV.	STATE DIST. NO.	STATE PROJECT NO.	FEDERAL PROJECT NO.	FISCAL YEAR	COUNTY	SHEET NO.	TOTAL SHEETS
W.V.	6	U305-13 -0.02 00	BR-0013 (042)E	2006	BROOKE	66	163

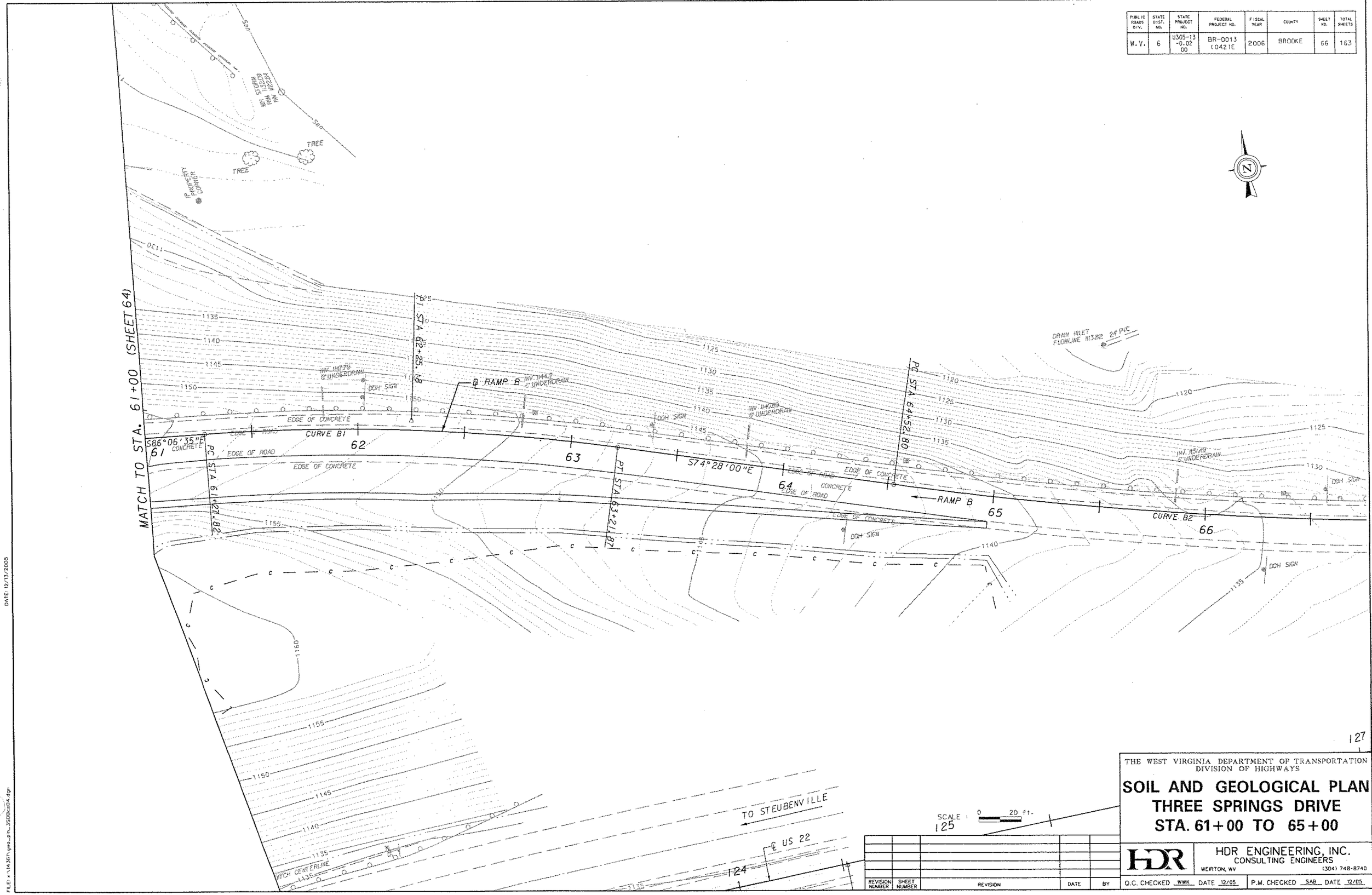

REVISION NUMBER	SHEET NUMBER	REVISION	DATE	BY

THE WEST VIRGINIA DEPARTMENT OF TRANSPORTATION
DIVISION OF HIGHWAYS

SOIL AND GEOLOGICAL PLAN
THREE SPRINGS DRIVE
STA. 61+00 TO 65+00

HDR ENGINEERING, INC.
CONSULTING ENGINEERS
WEIRTON, WV (304) 748-8740

Q.C. CHECKED WWK DATE 12/05 | P.M. CHECKED SAB DATE 12/05

DATE: 12/13/2005

FILE: v:\14.351\geo_pln_350Bcs14.dgn

PUBLIC ROADS DIV.	STATE DIST. NO.	STATE PROJECT NO.	FEDERAL PROJECT NO.	FISCAL YEAR	COUNTY	SHEET NO.	TOTAL SHEETS
W.V.	6	U305-13 -0.02 00	BR-0013 (042)E	2006	BROOKE	67	163

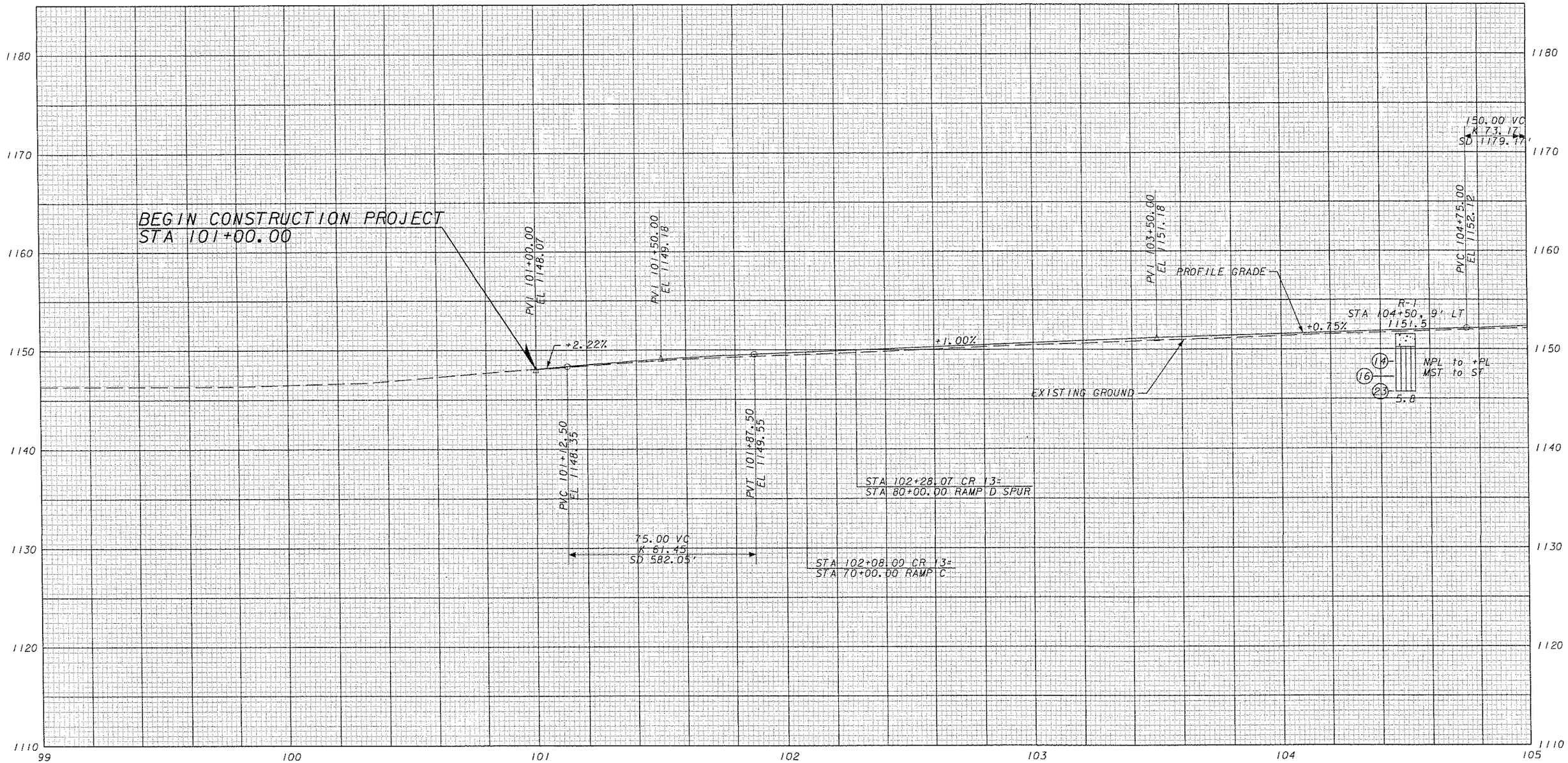

CR 13

SCALES
5 ft.
0
20 ft.
0

THE WEST VIRGINIA DEPARTMENT OF TRANSPORTATION
DIVISION OF HIGHWAYS

GEOLOGICAL PROFILE
WV CR 13
STA 99+00 TO 105+00

REVISION NUMBER	SHEET NUMBER	REVISION	DATE	BY

HDR ENGINEERING, INC.
CONSULTING ENGINEERS
WEIRTON, WV (304) 748-8740

Q.C. CHECKED WWK DATE 12/05 P.M. CHECKED SAB DATE 12/05

DATE: 12/13/2005 AS:

FILE: k:\14351\geo_pro_3508csBDR.dgn

PUBLIC ROADS DIV.	STATE DIST. NO.	STATE PROJECT NO.	FEDERAL PROJECT NO.	FISCAL YEAR	COUNTY	SHEET NO.	TOTAL SHEETS
W.V.	6	U305-13 -0.02 00	BR-0013 (042)E	2006	BROOKE	68	163

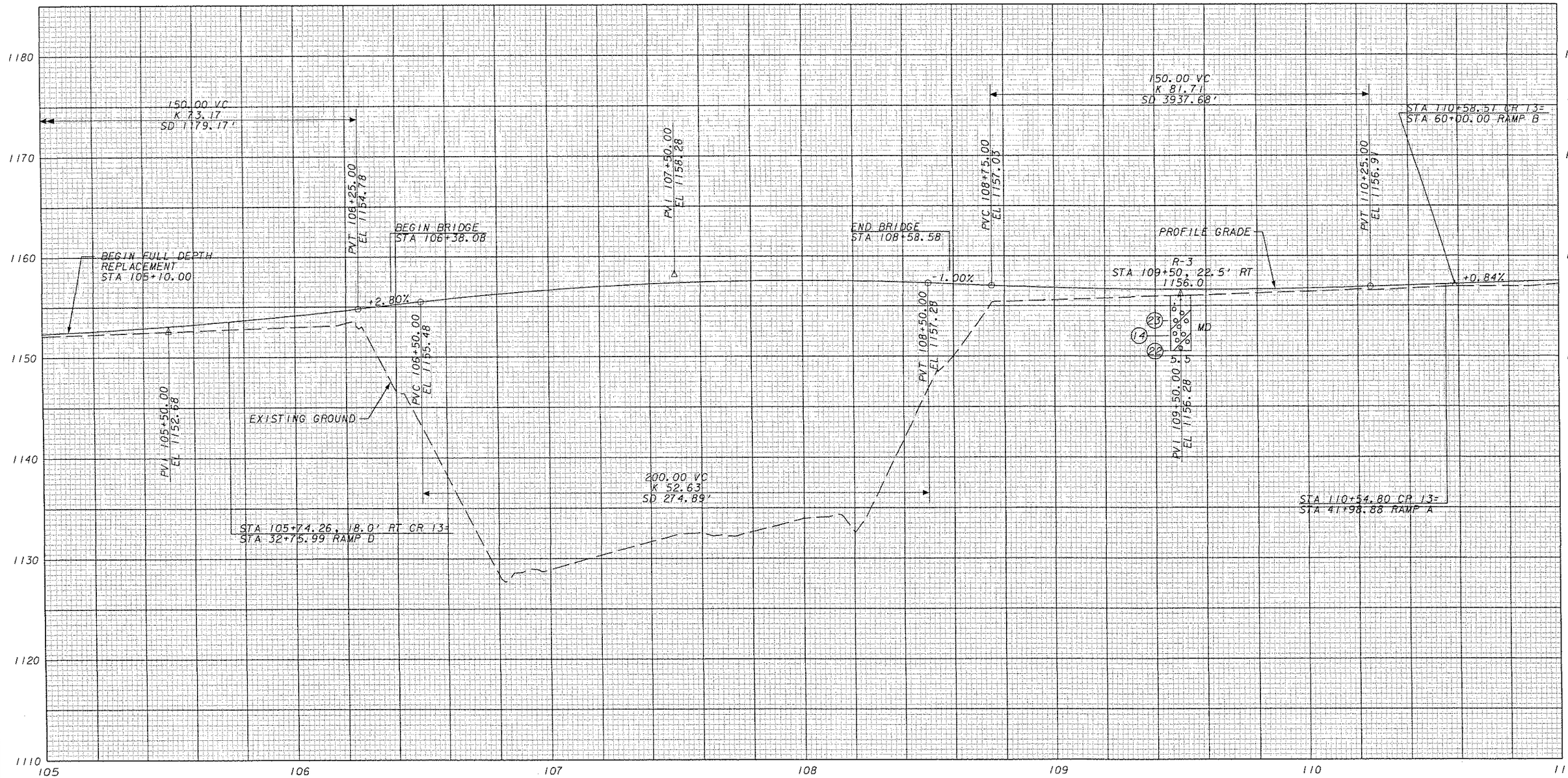

CR 13

SCALES
5 ft.
0 20 ft. 0

REVISION NUMBER	SHEET NUMBER	REVISION	DATE	BY

THE WEST VIRGINIA DEPARTMENT OF TRANSPORTATION
DIVISION OF HIGHWAYS

GEOLOGICAL PROFILE
WV CR 13
STA 105+00 TO 111+00

HDR ENGINEERING, INC.
CONSULTING ENGINEERS
WEIRTON, WV (304) 748-8740

Q.C. CHECKED WWK DATE 12/05 | P.M. CHECKED SAB DATE 12/05

AS= DATE: 12/13/2005 FILE: v:\14161\gen_pro_3509ex96R.dgn

PUBLIC ROADS DIV.	STATE DIST. NO.	STATE PROJECT NO.	FEDERAL PROJECT NO.	FISCAL YEAR	COUNTY	SHEET NO.	TOTAL SHEETS
W.V.	6	U305-13 -0.02 00	BR-0013 (042)E	2006	BROOKE	69	163

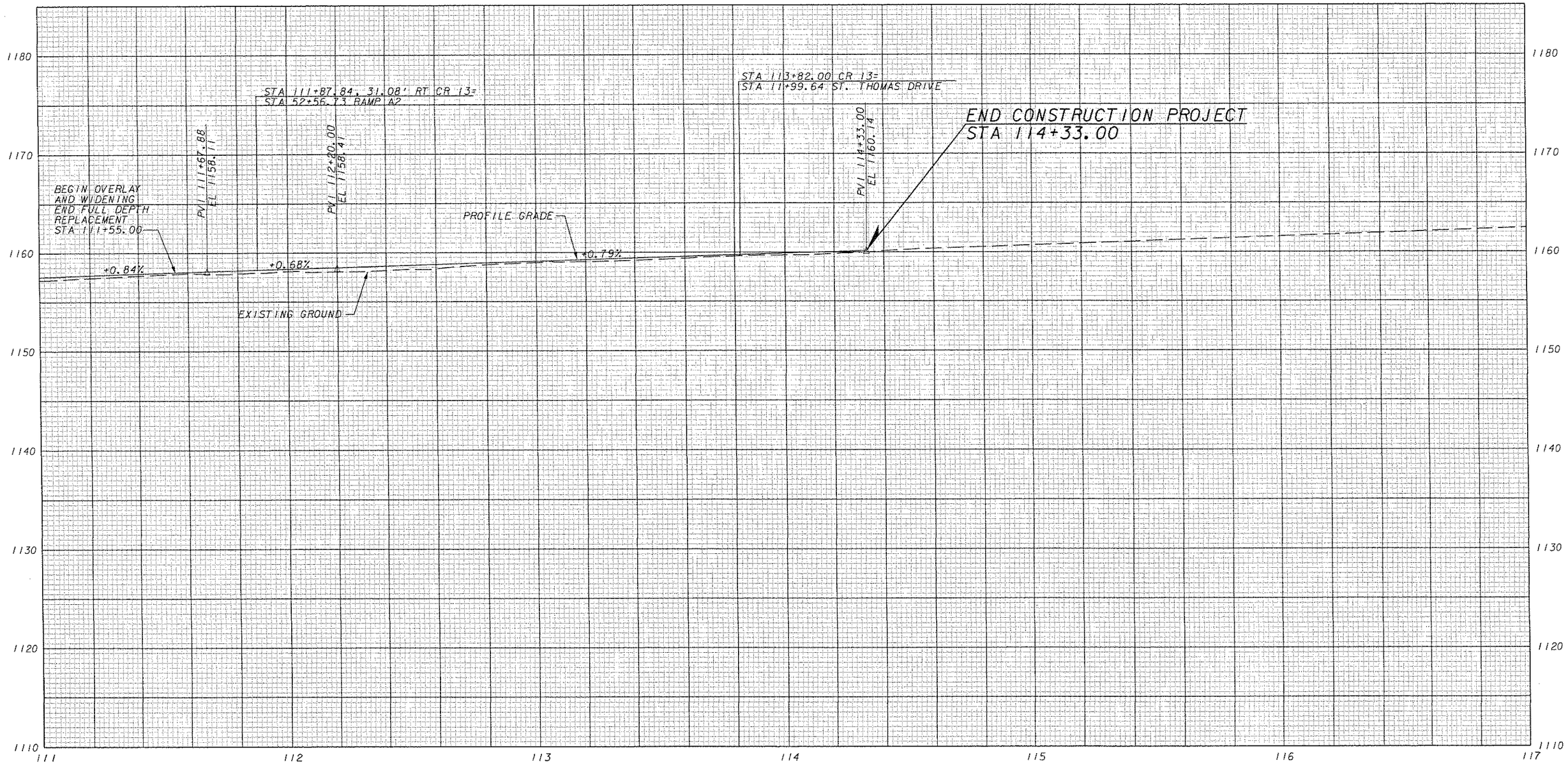

CR 13

SCALES
5 ft.
0
20 ft.
0

REVISION NUMBER	SHEET NUMBER	REVISION	DATE	BY

THE WEST VIRGINIA DEPARTMENT OF TRANSPORTATION
DIVISION OF HIGHWAYS

GEOLOGICAL PROFILE
WV CR 13
STA 111+00 TO 117+00

HDR ENGINEERING, INC.
CONSULTING ENGINEERS
WEIRTON, WV (304) 748-8740

Q.C. CHECKED WWK DATE 12/05 P.M. CHECKED SAB DATE 12/05

DATE: 12/13/2005 AS=

FILE: k:\14361\geo_pro_3508cs8OR.dgn

PUBLIC ROADS DIV.	STATE DIST. NO.	STATE PROJECT NO.	FEDERAL PROJECT NO.	FISCAL YEAR	COUNTY	SHEET NO.	TOTAL SHEETS
W.V.	6	U305-13 -0.02 DD	BR-0013 (042)E	2006	BROOKE	70	163

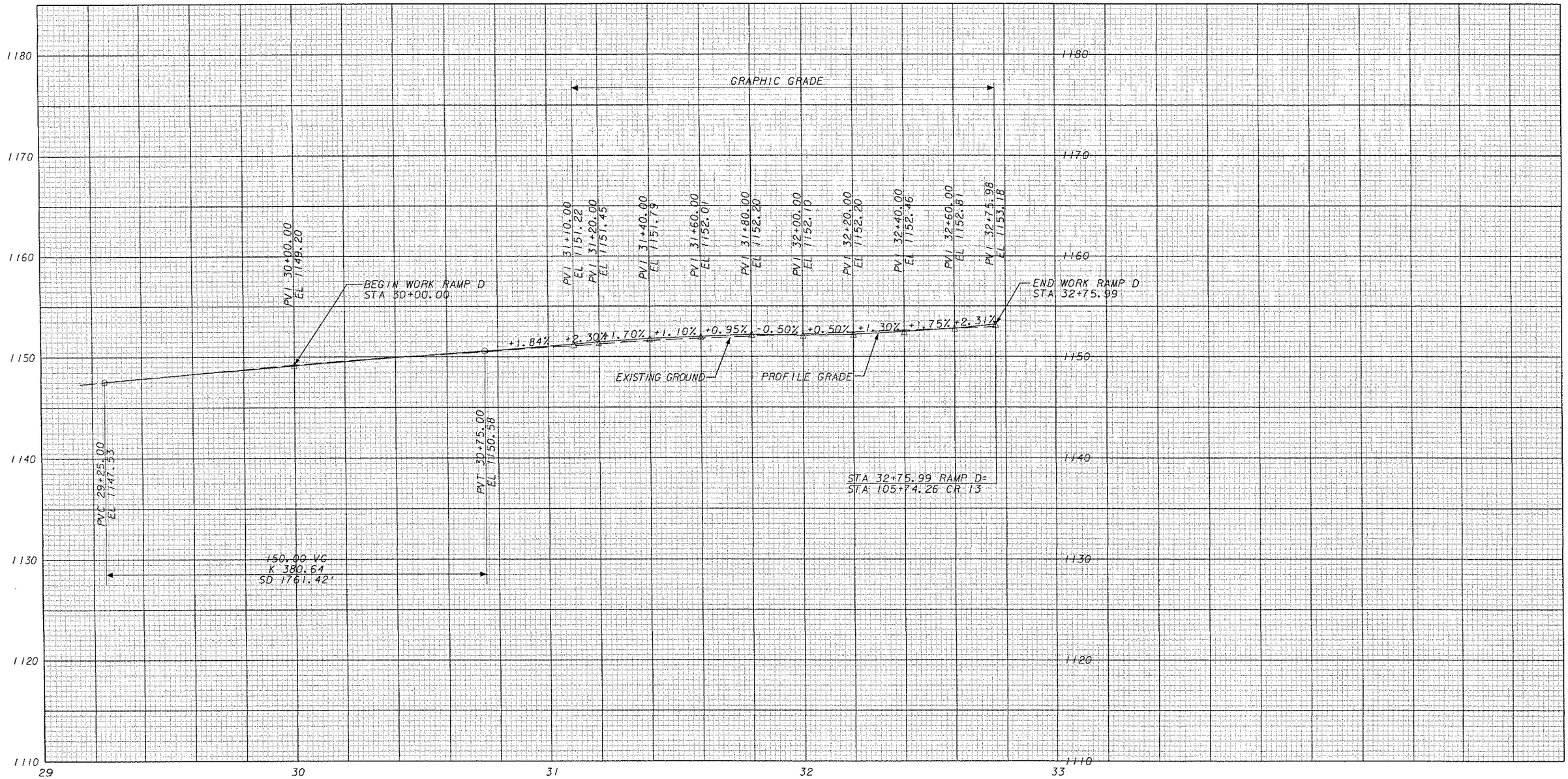

RAMP D

SCALES
5 ft.
0 20 ft.
0

REVISION NUMBER	SHEET NUMBER	REVISION	DATE	BY

THE WEST VIRGINIA DEPARTMENT OF TRANSPORTATION
DIVISION OF HIGHWAYS

GEOLOGICAL PROFILE
RAMP D
STA 30+00.00 TO 32+75.99

HDR ENGINEERING, INC.
CONSULTING ENGINEERS
WEIRTON, WV (304) 748-8740

Q.C. CHECKED WWK DATE 12/05 P.M. CHECKED SAB DATE 12/05

DATE 12/13/2005 AS-

FILE x:\14361\geo_pro_350RCsBDR.dgn

PUBLIC ROADS DIV.	STATE DIST. NO.	STATE PROJECT NO.	FEDERAL PROJECT NO.	FISCAL YEAR	COUNTY	SHEET NO.	TOTAL SHEETS
W.V.	6	U305-13 -0.02 00	BR-0013 (042)E	2006	BROOKE	71	163

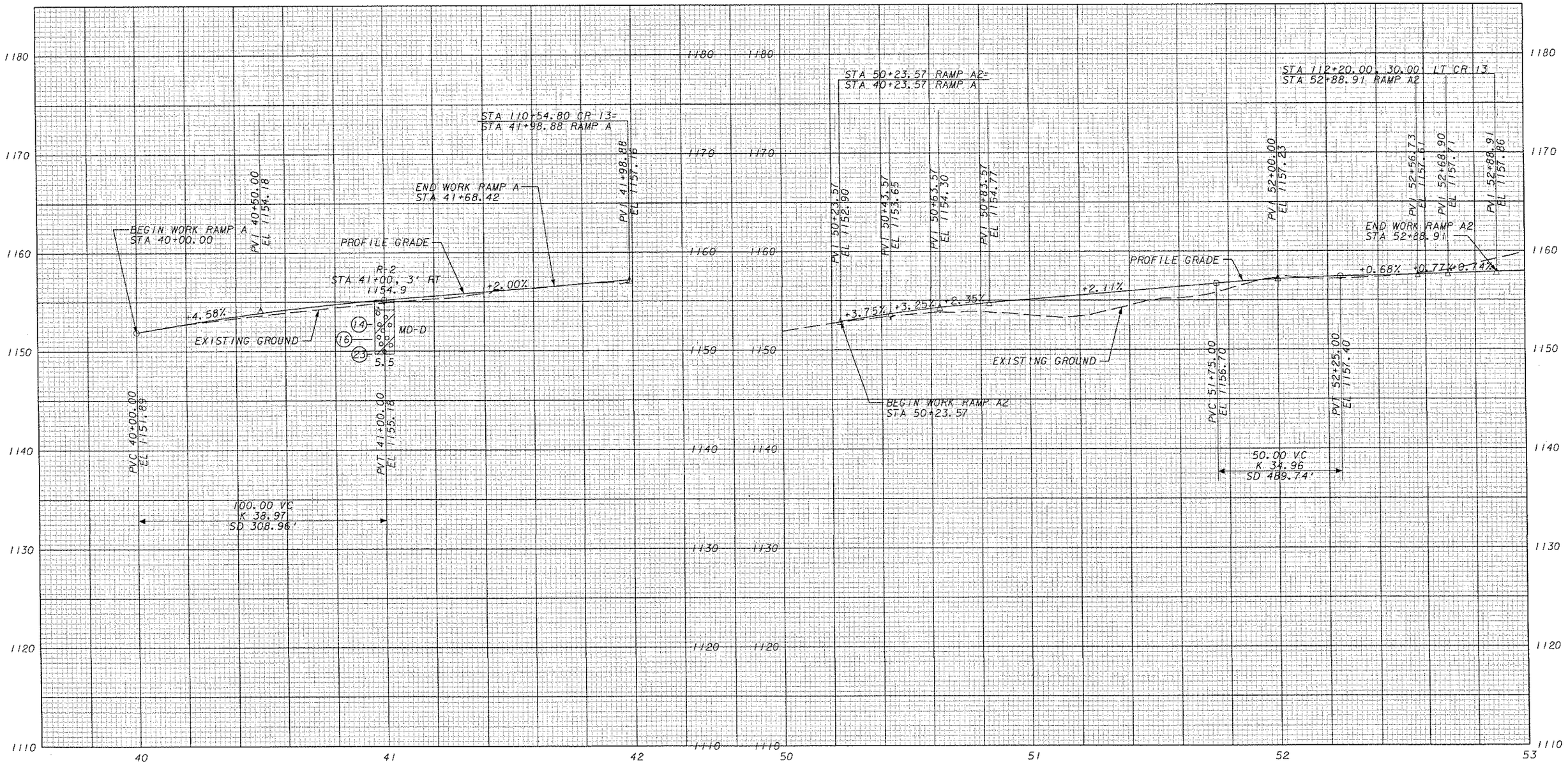

RAMP A

RAMP A2

SCALES

5 ft.

0 20 ft. 0

REVISION NUMBER	SHEET NUMBER	REVISION	DATE	BY

THE WEST VIRGINIA DEPARTMENT OF TRANSPORTATION
DIVISION OF HIGHWAYS

GEOLOGICAL PROFILE RAMP A AND A2

HDR ENGINEERING, INC.
CONSULTING ENGINEERS
WEIRTON, WV (304) 748-8740

Q.C. CHECKED WWK DATE 12/05 | P.M. CHECKED SAB DATE 12/05

FILE: x:\14361\geo_prop_350Rs\BDR.dgn DATE: 12/13/2005 AS-

PUBLIC ROADS DIV.	STATE DIST. NO.	STATE PROJECT NO.	FEDERAL PROJECT NO.	FISCAL YEAR	COUNTY	SHEET NO.	TOTAL SHEETS
W.V.	6	U305-13 -0.02 00	BR-0013 (042)E	2006	BROOKE	72	163

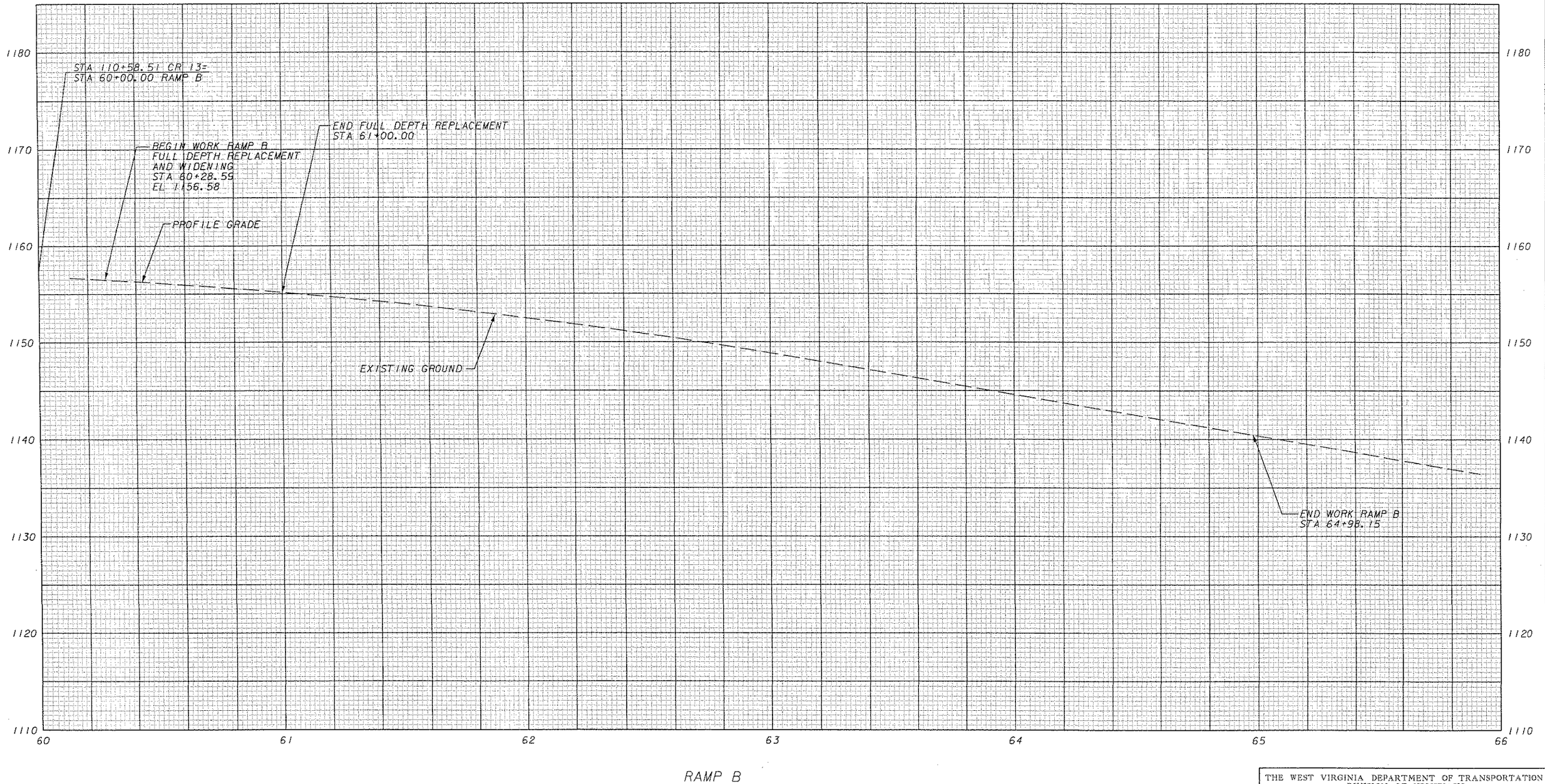

RAMP B

SCALES
5 ft.
0 20 ft.
0

REVISION NUMBER	SHEET NUMBER	REVISION	DATE	BY

THE WEST VIRGINIA DEPARTMENT OF TRANSPORTATION
DIVISION OF HIGHWAYS

GEOLOGICAL PROFILE
RAMP B
STA 60+00.00 TO 66+00.00

HDR ENGINEERING, INC.
CONSULTING ENGINEERS
WEIRTON, WV (304) 748-8740

Q.C. CHECKED WWK DATE 12/05 P.M. CHECKED SAB DATE 12/05

DATE 12/13/2005 AS-

FILE: x:\14361\geo_prg_3508ts09R.dgn

PUBLIC ROADS DIV.	STATE DIST. NO.	STATE PROJECT NO.	FEDERAL PROJECT NO.	FISCAL YEAR	COUNTY	SHEET NO.	TOTAL SHEETS
W.V.	6	U305-13 -0.02 00	BR-0013 (042)E	2006	BROOKE	73	163

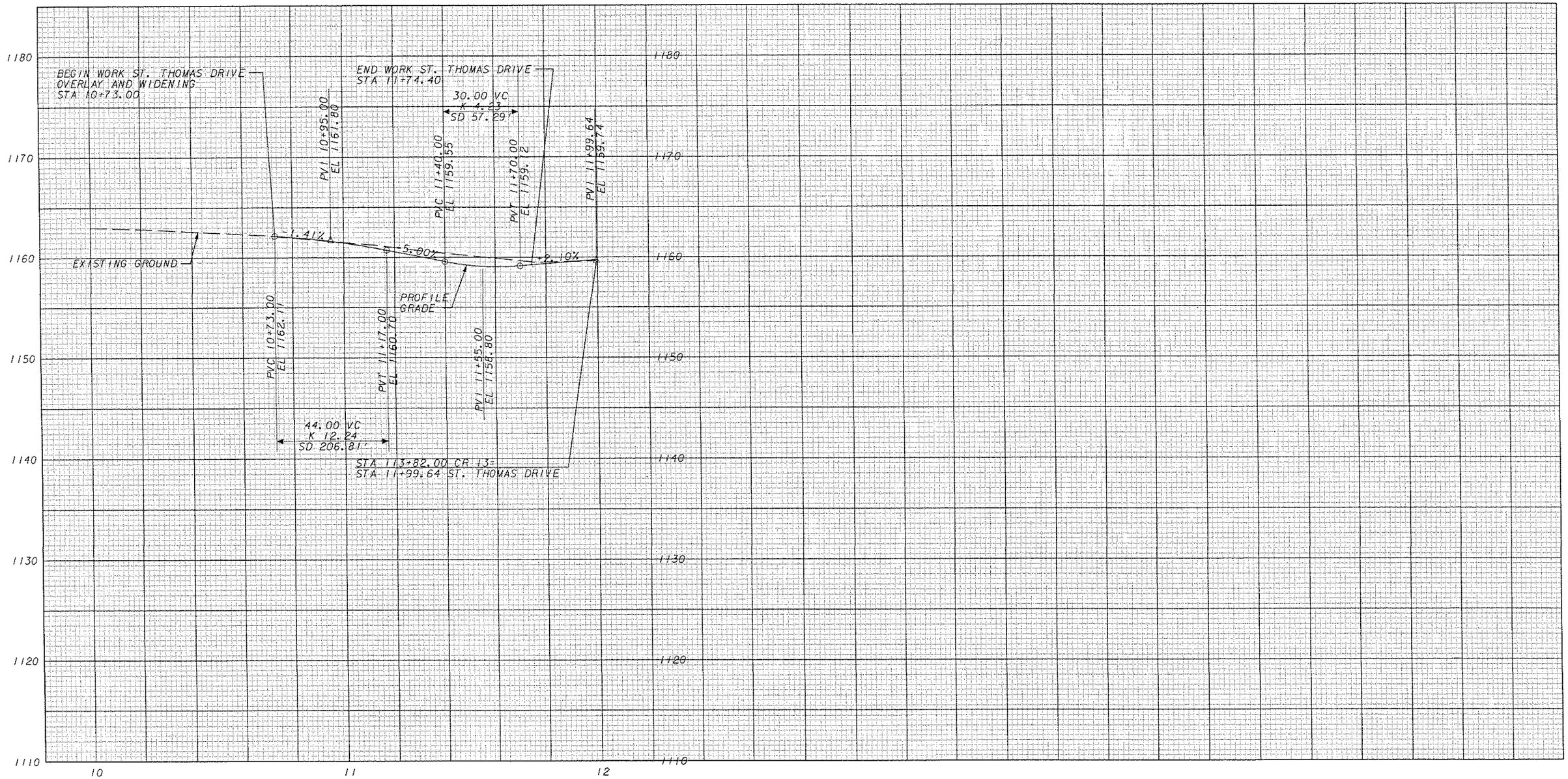

ST. THOMAS DRIVE

SCALES
5 ft.
0 20 ft. 0

REVISION NUMBER	SHEET NUMBER	REVISION	DATE	BY

THE WEST VIRGINIA DEPARTMENT OF TRANSPORTATION
DIVISION OF HIGHWAYS

GEOLOGICAL PROFILE
ST. THOMAS DRIVE
STA 10+00 TO 12+00

HDR ENGINEERING, INC.
CONSULTING ENGINEERS
WEIRTON, WV (304) 748-8740

Q.C. CHECKED WWK DATE 12/05 P.M. CHECKED SAB DATE 12/05

FILE: v:\14.361\geo_pro_3SDB=fDR.dgn DATE: 12/13/2005 AS=

PUBLIC ROADS DIV.	STATE DIST. NO.	STATE PROJECT NO.	FEDERAL PROJECT NO.	FISCAL YEAR	COUNTY	SHEET NO.	TOTAL SHEETS
W.V.	6	U305-13 -0.02 00	BR-0013 (042)E	2006	BROOKE	74	163

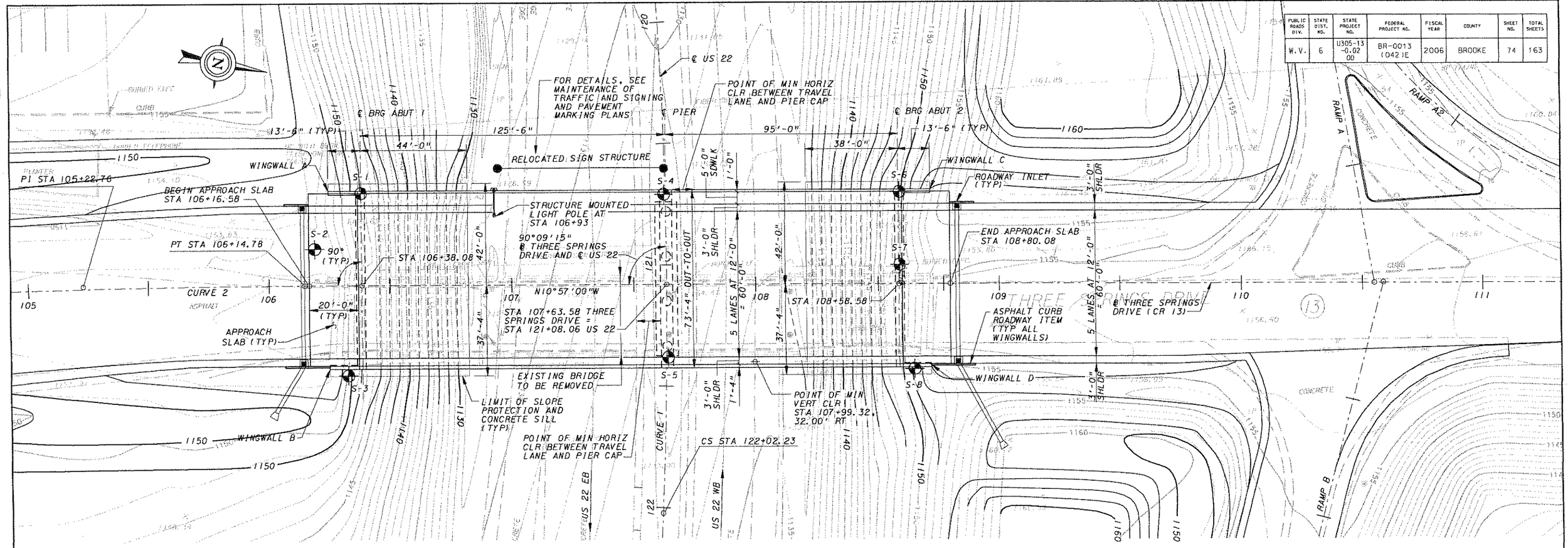

PLAN

THREE SPRINGS DR.
CURVE 2

PI = 105+22.76
N = 692592.36
Δ = 2°38'11.86" RT
Dc = 1°25'56.62"
R = 4000.00'
L = 184.07'
T = 92.05'
E = 1.06'
SE = N.C.
PRC 104+30.71
PT 106+14.78

US 22
CURVE 1

PI = 117+29.48
N = 692775.69
Δ = 36°30'00" RT
Dc = 3°00'00"
Rc = 1909.86'
Tc = 493.92'
Ec = 62.84'
θs = 3°45'00"
Ls = 250.00'
ST = 83.37'
LT = 166.70'
K = 124.98'
P = 1.36'
Xs = 249.89'
Ys = 5.45'
LC = 249.95
TS = 109+85.56
SC = 112+35.56
CS = 122+02.23
ST = 124+52.23

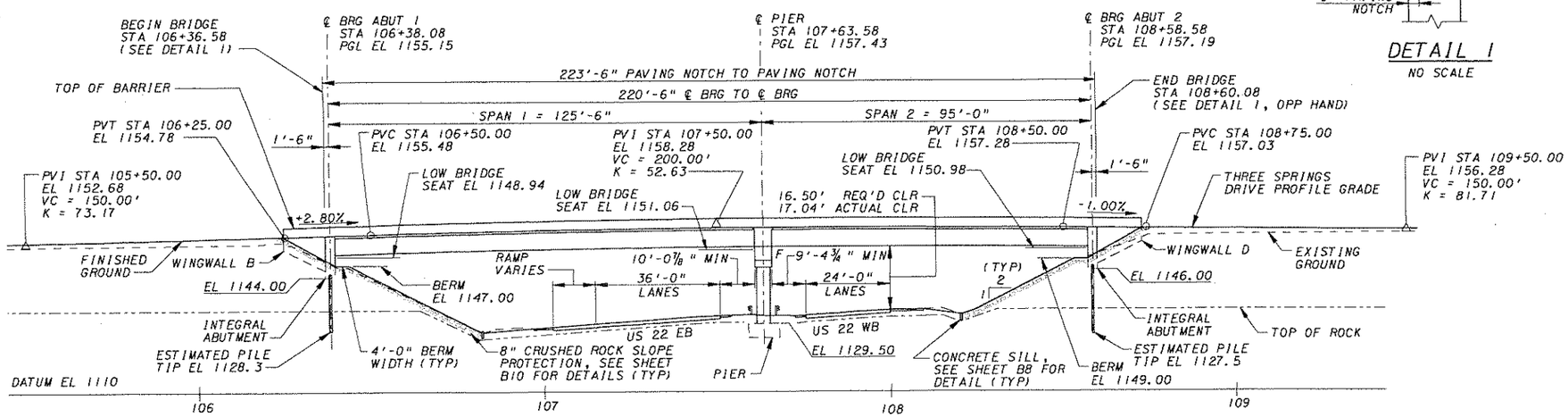

ELEVATION

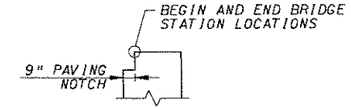

DETAIL 1
NO SCALE

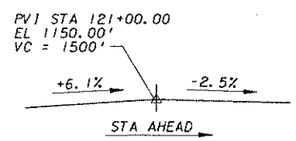

US 22 VERTICAL CURVE DATA

FROM EXISTING PLANS NOT SURVEY DATA

NOTES:

1. FOR LIST OF SHEETS, SEE SH B4.
2. WORK THIS SHEET WITH TYPICAL SECTION SH B2 AND STAKE-OUT PLAN SH B3.
3. FOR GENERAL NOTES, SEE SH B5 AND B6.
4. ⊕ - INDICATES STRUCTURE BORING

20' 0 20'
1" = 20'-0"

MATTHEW A. BUNNER REGISTERED 14632 STATE OF WEST VIRGINIA PROFESSIONAL ENGINEER

Matthew A. Bunner

REVISION NUMBER	SHEET NUMBER	REVISION	DATE	BY

THE WEST VIRGINIA DEPARTMENT OF TRANSPORTATION
DIVISION OF HIGHWAYS

THREE SPRINGS DRIVE BRIDGE REPLACEMENT

GENERAL PLAN AND ELEVATION

HDR ENGINEERING, INC.
CONSULTING ENGINEERS
WEIRTON, WV (304) 748-8740

DESIGNED BY APR	DRAWN BY APR	CHECKED BY JWB	BRIDGE NO. 10565
DATE 06-05	DATE 06-05	DATE 08-05	SHEET NO. B1

FILE: X:\14361\MODEL\STR_PRE_3SPN.mpb

PUBLIC ROADS DIV.	STATE DIST. NO.	STATE PROJECT NO.	FEDERAL PROJECT NO.	FISCAL YEAR	COUNTY	SHEET NO.	TOTAL SHEETS
W.V.	6	U305-13 -0.02 00	BR-0013 (042)E	2006	BROOKE	75	163

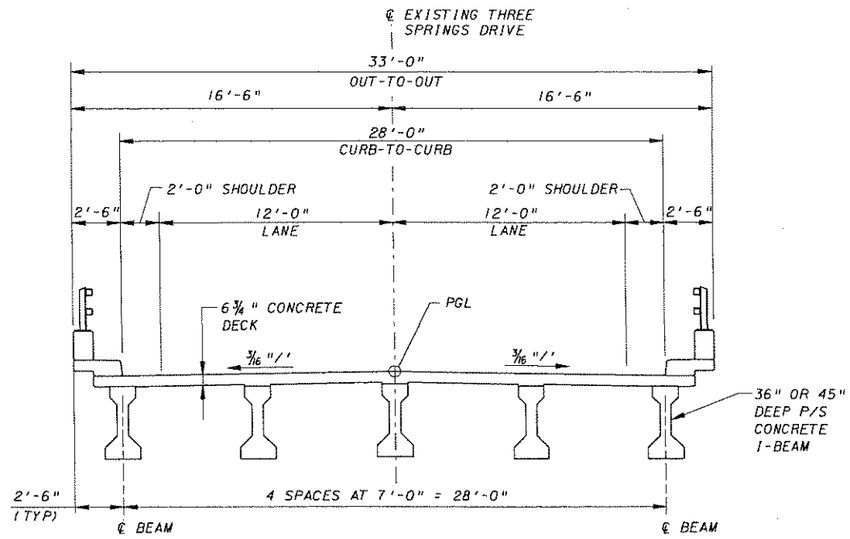

TYPICAL SECTION - EXISTING BRIDGE

(LOOKING AHEAD ON STATION)

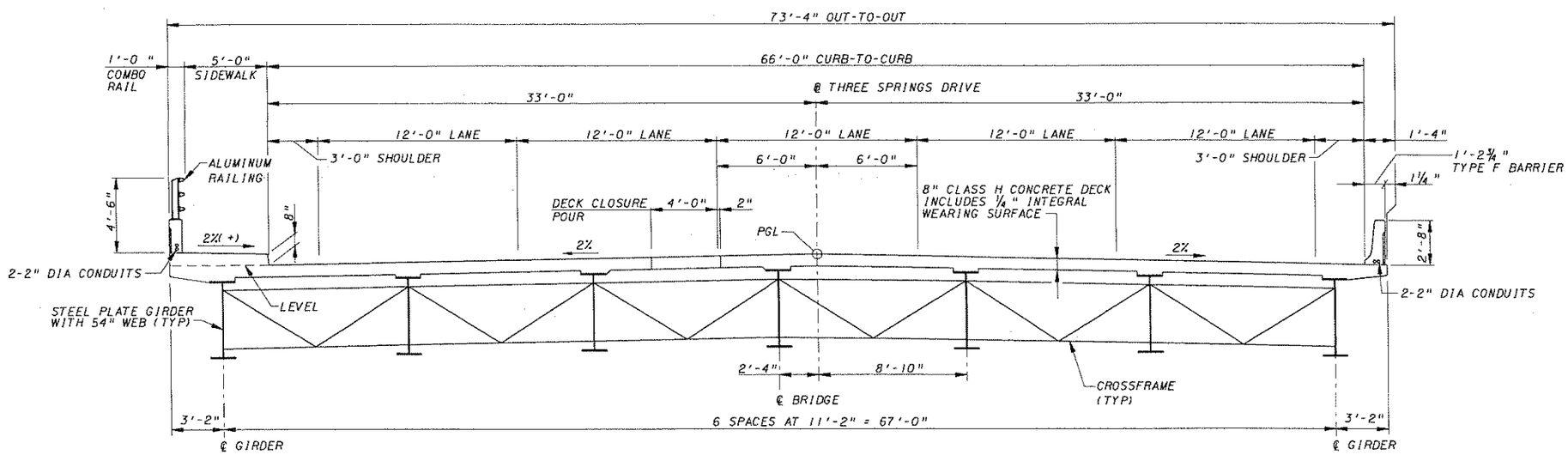

TYPICAL SECTION - NEW BRIDGE

(LOOKING AHEAD ON STATION)

NOTES:

1. FOR GENERAL NOTES, SEE SH B5 AND B6.
2. EXISTING BRIDGE SECTION SHOWN FOR INFORMATION ONLY.

4' 2' 0 4'

1/4" = 1'-0"

REVISION NUMBER	SHEET NUMBER	REVISION	DATE	BY

THE WEST VIRGINIA DEPARTMENT OF TRANSPORTATION
DIVISION OF HIGHWAYS

THREE SPRINGS DRIVE BRIDGE REPLACEMENT

TYPICAL SECTION

HDR ENGINEERING, INC.
CONSULTING ENGINEERS
WEIRTON, WV (304) 748-8740

DESIGNED BY APR	DRAWN BY APR	CHECKED BY JWB	BRIDGE NO. 10565
DATE 05-05	DATE 05-05	DATE 08-05	SHEET NO. B2

FILE xx\1436\0ft dgn\STR_TYP_3SPR.dgn

PUBLIC ROADS DIV.	STATE DIST. NO.	STATE PROJECT NO.	FEDERAL PROJECT NO.	FISCAL YEAR	COUNTY	SHEET NO.	TOTAL SHEETS
W.V.	6	U305-13 -0.02 00	BR-0013 (042)E	2006	BROOKE	T6	163

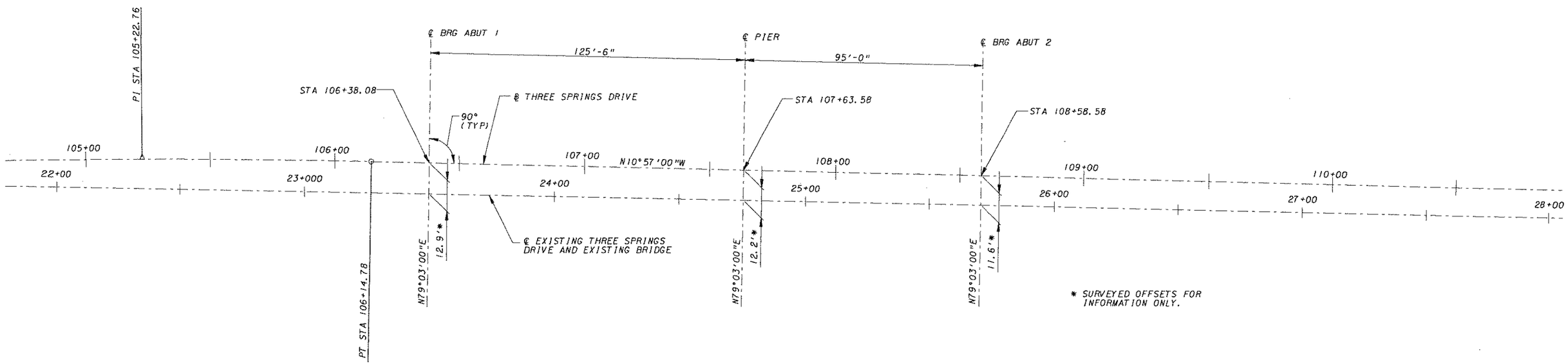

LAYOUT PLAN

WORK POINTS		
WP #	STATION	OFFSET
WP 1	106+39.58	39.00' LT
WP 2	106+39.58	10.00' LT
WP 3	106+38.08	00.00'
WP 4	106+39.58	34.33' RT
WP 5	106+36.58	34.33' RT
WP 6	106+24.58	34.33' RT
WP 7	106+24.58	32.58' RT
WP 8	106+36.58	10.00' LT
WP 9	106+24.58	37.25' LT
WP 10	106+24.58	39.00' LT
WP 11	106+36.58	39.00' LT
WP 12	107+68.08	34.08' LT
WP 13	107+68.08	7.92' LT
WP 14	107+63.58	00.00'
WP 15	107+68.08	29.42' RT
WP 16	107+59.08	29.42' RT
WP 17	107+59.08	7.92' LT
WP 18	107+59.08	34.08' LT
WP 19	108+57.08	39.00' LT
WP 20	108+57.08	10.00' LT
WP 21	108+58.58	00.00'
WP 22	108+57.08	34.33' RT
WP 23	108+60.08	34.33' RT
WP 24	108+72.08	34.33' RT
WP 25	108+72.08	32.58' RT
WP 26	108+60.08	10.00' LT
WP 27	108+72.08	37.25' LT
WP 28	108+72.08	39.00' LT
WP 29	108+60.08	39.00' LT

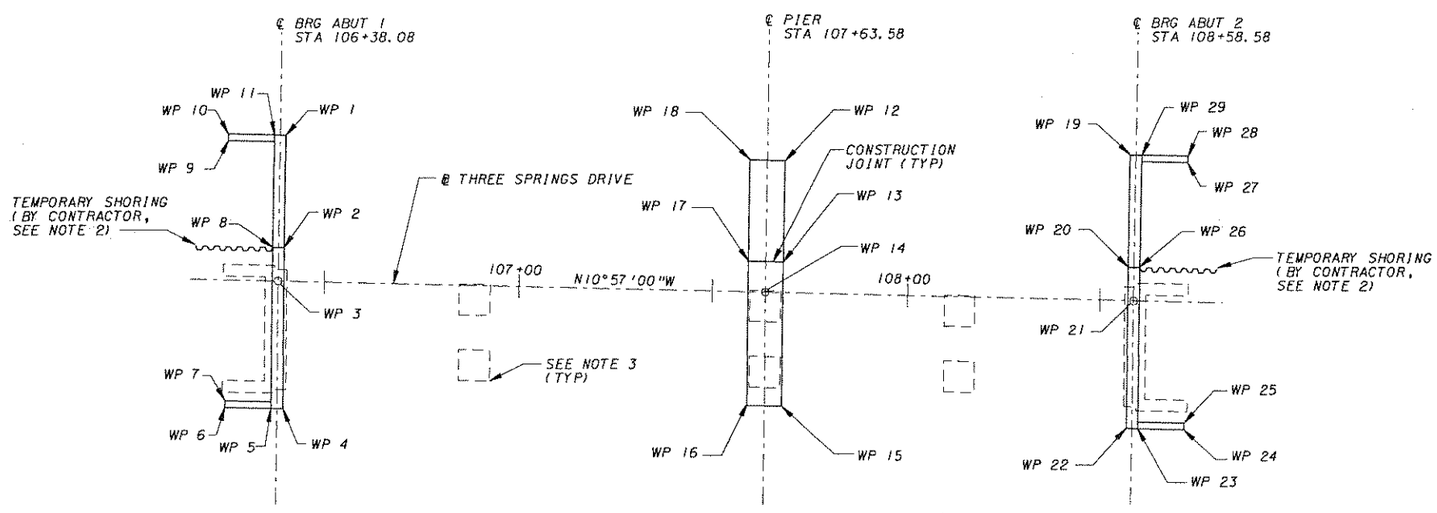

STAKE OUT PLAN

NOTES:

1. FOR GENERAL NOTES, SEE SH B5 AND B6.
2. 20 LINEAL FEET OF TEMPORARY SHORING IS ANTICIPATED AT EACH ABUTMENT. TEMPORARY SHORING SHALL BE INCIDENTAL TO ITEM 212001-000, "STRUCTURE EXCAVATION".
3. APPROXIMATE LOCATIONS OF EXISTING FOUNDATIONS (FOR INFORMATION ONLY).

20' 0 20'
1" = 20'-0"

REVISION NUMBER	SHEET NUMBER	REVISION	DATE	BY

THE WEST VIRGINIA DEPARTMENT OF TRANSPORTATION
DIVISION OF HIGHWAYS

THREE SPRINGS DRIVE BRIDGE REPLACEMENT

LAYOUT PLAN AND STAKE OUT PLAN

HDR ENGINEERING, INC.
CONSULTING ENGINEERS
WEIRTON, WV (304) 748-8740

DESIGNED BY JWB	DRAWN BY APR	CHECKED BY JWB	BRIDGE NO. 10565
DATE 06-05	DATE 06-05	DATE 08-05	SHEET NO. B3

FILE#x:\1436\bridge\STR_LAY_3SPR.dgn

PUBLIC ROADS DIV.	STATE DIST. NO.	STATE PROJECT NO.	FEDERAL PROJECT NO.	FISCAL YEAR	COUNTY	SHEET NO.	TOTAL SHEETS
W.V.	6	U305-13 -0.02 00	BR-0013 (041)E	2006	BROOKE	77	163

LIST OF SHEETS

SHEET NUMBER	DESCRIPTION
B1	GENERAL PLAN AND ELEVATION
B2	TYPICAL SECTION
B3	LAYOUT PLAN AND STAKE OUT PLAN
B4	QUANTITIES AND LIST OF SHEETS
B5	GENERAL NOTES
B6	GENERAL NOTES
B7	CONSTRUCTION STAGING DETAILS
B8	ABUTMENT 1 PLAN AND SECTION
B9	ABUTMENT 1 ELEVATION
B10	ABUTMENT 2 PLAN AND SECTION
B11	ABUTMENT 2 ELEVATION
B12	ABUTMENT SECTION AND WINGWALL ELEVATIONS
B13	ABUTMENT DETAILS
B14	ABUTMENT DETAILS
B15	ABUTMENT REINFORCEMENT BAR SCHEDULE
B16	PIER PLAN AND ELEVATION
B17	PIER DETAILS
B18	PIER CONTINUITY DIAPHRAGM
B19	PIER REINFORCEMENT BAR SCHEDULE
B20	FRAMING PLAN
B21	GIRDER ELEVATION
B22	STEEL DETAILS
B23	STEEL DETAILS
B24	CROSSFRAME AND TEMPORARY BRACING DETAILS
B25	STRESS TABLES
B26	CAMBER TABLE
B27	BEARING DETAILS
B28	DECK PAVING PLAN
B29	TYPICAL DECK CROSS SECTION
B30	TYPICAL DECK DETAILS
B31	TYPICAL DECK DETAILS
B32	TYPICAL DECK DETAILS
B33	DECK PAVING REINFORCEMENT BAR SCHEDULE
B34	DECK ELEVATIONS AND DEFLECTIONS
B35	DECK ELEVATIONS
B36	COMBO RAIL DETAILS
B37	APPROACH SLAB ABUTMENT 1
B38	APPROACH SLAB ABUTMENT 2
B39	APPROACH SLAB DETAILS
B40	APPROACH SLAB REINFORCEMENT BAR SCHEDULE
B41	ARCHITECTURAL TREATMENT DETAILS
B42	SITUATION PLAN
B43	TEST BORING LOGS
B44	TEST BORING LOGS
B45	TEST BORING LOGS
B46	TEST BORING LOGS
B47	TEST BORING LOGS
B48	TEST BORING LOGS
B49	TEST BORING LOGS
B50	INTERIOR GIRDER RATING TABLES
B51	EXTERIOR GIRDER RATING TABLES
N/A	EXISTING BRIDGE PLANS (15 SHEETS)

QUANTITIES

ITEM	DESCRIPTION	UNIT	ABUT 1	PIER	ABUT 2	SUPER-STRUCT	TOTAL
203001-000	DISMANTLING STRUCTURE (2360)	LS	-	-	-	-	LS
212001-000	STRUCTURE EXCAVATION	CY	49	44	42	-	135
212003-000	ROCK EXCAVATION	CY	-	94	-	-	94
212005-000	SELECT MATERIAL FOR BACKFILLING	CY	123	-	123	-	246
218004-001	8 INCH CRUSHED ROCK SLOPE PROTECTION	SY	430	-	371	-	801
601002-001	CLASS B CONCRETE	CY	-	196	-	-	196
601002-003	CLASS B CONCRETE, ARCHITECTURAL	CY	54	-	54	-	108
601009-001	CLASS H CONCRETE (SEE NOTE 2)	CY	1	69	1	487	558
601009-003	CLASS H CONCRETE, ARCHITECTURAL	CY	45	-	45	32	122
601014-001	TEST SLAB	LS	-	-	-	-	LS
* 602001-001	REINFORCING STEEL BAR	LB	-	33,824	-	-	33,824
* 602002-001	EPOXY COATED REINFORCING STEEL BAR	LB	11,702	2,956	11,702	113,826	140,186
* 615001-001	STEEL SUPERSTRUCTURE	LS	-	-	-	-	LS
615029-001	NON-GUIDED BEARING, ELASTOMERIC	EA	-	14	-	-	14 (SEE NOTE 4)
615075-001	MISCELLANEOUS BRIDGE WORK, BRIDGE REPAIR	LS	-	-	-	-	1
614001-004	HP10X57 STEEL PILES	LF	230	-	267	-	497
617003-001	ALUMINUM RAILING, ANODIZED	LF	12	-	12	224	248
639001-001	CONSTRUCTION LAYOUT STAKE	LS	-	-	-	-	LS

* SEE TABLES BELOW

ITEM 602002-001 EPOXY COATED REINFORCING STEEL BAR (LB)

SIZE	ABUT 1	PIER	ABUT 2	SUPER-STRUCT	TOTAL
3	12	-	12	356	380
4	138	-	138	51,722	51,998
5	4,634	-	4,634	26,859	36,127
6	4,368	2,956	4,368	34,889	46,581
8	2,550	-	2,550	-	5,100
TOTAL	11,702	2,956	11,702	113,826	140,186

ITEM 602001-001 REINFORCING STEEL BAR (LB)

SIZE	PIER	TOTAL
5	6,589	6,589
6	2,939	2,939
9	8,162	8,162
10	16,134	16,134
TOTAL	33,824	33,824

ITEM 615001-001 STEEL SUPERSTRUCTURE

(FOR INFORMATION ONLY)

DESCRIPTION	UNIT	TOTAL
M270, GR. 50W	LB	385,862
7/8" DIA x 5" LONG STUD SHEAR CONNECTORS	EA	3,213

NOTES:

1. FOR GENERAL NOTES, SEE SH B5 AND B6.
2. FOR THE PURPOSE OF ESTIMATING THE QUANTITY OF CLASS H CONCRETE IN THE FLUTES OF PERMANENT METAL DECK FORMS, A UNIFORM THICKNESS OF ONE INCH OVER THE AREA OF THE SIP FORMS WAS ASSUMED. THE WIDTH OF FORMS IS MEASURED FROM EDGE OF FLANGE TO EDGE OF FLANGE.

   APPROXIMATE CONCRETE IN FLUTES = 32 CY
3. FOR ELECTRICAL QUANTITIES, SEE LIGHTING PLAN SH L-1 AND SIGNAL PLAN SH SG-1.
4. ELASTOMERIC BEARING PADS AT ABUTMENTS SHALL BE INCIDENTAL TO THE COST OF ITEM 615001-001, "STEEL SUPERSTRUCTURE."

THE WEST VIRGINIA DEPARTMENT OF TRANSPORTATION
DIVISION OF HIGHWAYS

THREE SPRINGS DRIVE BRIDGE REPLACEMENT

QUANTITIES AND LIST OF SHEETS

REVISION NUMBER	SHEET NUMBER	REVISION	DATE	BY

HDR ENGINEERING, INC.
CONSULTING ENGINEERS
WEIRTON, WV (304) 748-8740

DESIGNED BY APR	DRAWN BY APR	CHECKED BY JWB	BRIDGE NO. 10565
DATE 06-05	DATE 06-05	DATE 08-05	SHEET NO. B4

FILE: x:\1435\1 BRIDGES\STP_NAD_3SPRS.DGN

GENERAL NOTES

PUBLIC ROADS DIV.	STATE DIST. NO.	STATE PROJECT NO.	FEDERAL PROJECT NO.	FISCAL YEAR	COUNTY	SHEET NO.	TOTAL SHEETS
W.V.	6	U305-13-0.02 00	BR-0013 (042)E	2006	BROOKE	78	163

GOVERNING SPECIFICATIONS

THE GOVERNING PROVISIONS APPLICABLE TO THIS PROJECT ARE THE WEST VIRGINIA DEPARTMENT OF HIGHWAYS STANDARD SPECIFICATIONS, ROADS AND BRIDGES, ADOPTED 2000 AS AMENDED BY THE SUPPLEMENTAL SPECIFICATIONS OF THE WEST VIRGINIA DEPARTMENT OF HIGHWAYS DATED JAN 1, 2003, THE CONTRACT PLANS AND THE CONTRACT DOCUMENTS.

DESIGN

THE DESIGN IS IN ACCORDANCE WITH THE AASHTO LRFD BRIDGE DESIGN SPECIFICATIONS THIRD EDITION, 2004.

THE STRUCTURE HAS BEEN DESIGNED FOR A LIVE LOAD CAPACITY OF HL-93. THE LIVE LOAD DISTRIBUTION WAS DETERMINED BY THE AASHTO APPROXIMATE METHOD.

ALL DESIGN WAS PERFORMED BY THE LRFD METHOD (LOAD AND RESISTANCE FACTOR DESIGN).

FATIGUE WAS CHECKED FOR AN AVERAGE ADTT OF 150 OVER THE 75 YEAR DESIGN LIFE OF THE STRUCTURE.

THE DESIGN PROVIDES FOR A FUTURE WEARING SURFACE (NOT PART OF THIS CONTRACT) OF 25 POUNDS PER SQUARE FOOT ON THE ROADWAY.

THE DESIGN PROVIDES FOR AN ALLOWANCE OF 15 POUNDS PER SQUARE FOOT OF DECK AREA FORMED USING PERMANENT METAL DECK FORMS (WEIGHT OF FORMS PLUS WEIGHT OF CONCRETE IN THE FLUTES OF FORMS).

THE STRUCTURE IS DESIGNED TO SEISMIC PERFORMANCE ZONE 1.

GENERAL

ALL DIMENSIONS SHOWN ARE HORIZONTAL OR VERTICAL UNLESS NOTED.

ALL SUPERSTRUCTURE DIMENSIONS ARE BASED ON A NORMAL TEMPERATURE OF 68°F.

SEE THE ROADWAY PLANS FOR HORIZONTAL AND VERTICAL CONTROL.

ALL STATIONS AND ELEVATIONS ARE IN FEET, UNLESS NOTED.

DESIGN STRENGTHS

CLASS B CONCRETE $f'c$ = 3,000 PSI, n = 9
CLASS H CONCRETE $f'c$ = 4,000 PSI, n = 8

REINFORCING STEEL Fy = 60,000 PSI

STRUCTURAL STEEL AASHTO M270 GRADE 50 Fy = 50,000 PSI, Fu = 65,000 PSI
STRUCTURAL STEEL AASHTO M270 GRADE 50W Fy = 50,000 PSI, Fu = 70,000 PSI

CONCRETE

CLASS H CONCRETE, ITEM 601009-001: DECK, THE CONTINUITY DIAPHRAGM AT PIER AND SIDEWALK.

CLASS H CONCRETE, ARCHITECTURAL, ITEM 601009-003: BARRIER AND COMBO RAIL (ON SUPERSTRUCTURE AND WINGWALLS) AND THE PORTION OF INTEGRAL ABUTMENTS ABOVE THE ELEVATION OF THE BRIDGE SEAT.

CLASS B CONCRETE, ITEM 601002-001: PIER CAP, PIER COLUMNS, AND PIER FOOTING.

CLASS B CONCRETE, ARCHITECTURAL, ITEM 601002-003: INTEGRAL ABUTMENTS BELOW BRIDGE SEAT AND WINGWALLS.

WATER REDUCING RETARDING ADMIXTURE IN ACCORDANCE WITH SECTION 707.2 SHALL BE USED IN ALL DECK CONCRETE. COST OF ADMIXTURE IS TO BE INCLUDED IN THE UNIT PRICE BID FOR CLASS H CONCRETE. RETARDER WILL NOT BE REQUIRED FOR TEMPERATURES BELOW 50°F. THE CONCRETE SHALL BE PLACED IN THE SEQUENCE SHOWN ON THE PLANS. THE CONTRACTOR'S ATTENTION IS CALLED TO THE TEST REQUIREMENTS FOR THE RETARDER ADMIXTURE.

CHAMFER ALL EXPOSED EDGES OF SUBSTRUCTURE CONCRETE 1" x 1" AND SUPERSTRUCTURE CONCRETE ¾" x ¾" UNLESS NOTED.

WHENEVER CONCRETE IS PLACED USING A CONCRETE PUMP, A STANDBY CONCRETE PUMP SHALL BE PROVIDED AS A BACKUP TO AVOID INTERRUPTION TO THE CONCRETE PLACEMENT CAUSED BY A BREAKDOWN OF THE PUMP.

BARRIERS SHALL NOT BE PLACED UNTIL THE DECK SLAB ON WHICH AND ADJACENT TO THE SPAN IN WHICH THE BARRIER IS BEING PLACED HAS BEEN COMPLETED IN ACCORDANCE WITH SECTION 601.8.7.

ALL CONCRETE SHALL BE FINISHED TO THE REQUIREMENTS OF SECTION 601.11.

APPROXIMATE AREA OF DECK FORMED WITH SIP FORMS = 10,359 SF.

USE REMOVABLE FORMS TO CONSTRUCT DECK OVERHANGS AND DECK BETWEEN GIRDERS G3 AND G4. THE CONTRACTOR'S FORMING PLAN FOR THE DECK AND DECK OVERHANGS SHALL BE SUBMITTED TO THE DIVISION FOR APPROVAL BY THE ENGINEER PRIOR TO PLACEMENT OF CONCRETE. FORMING DESIGN SHALL BE BY A PROFESSIONAL ENGINEER REGISTERED IN THE STATE OF WEST VIRGINIA, WHO SHALL ALSO VERIFY THAT THE DESIGN IS UTILIZED.

CONCRETE (CONTINUED)

DO NOT USE FORM SUPPORT SYSTEMS THAT WILL CAUSE OVERSTRESS OR DEFORMATION IN PERMANENT BRIDGE MEMBERS DEEMED UNACCEPTABLE BY THE DIVISION. SUPPORT OVERHANG FORMS FROM THE BOTTOM FLANGE OF PERMANENT OR TEMPORARY FASCIA GIRDERS, OR PROVIDE BRACING TO PREVENT WEB BUCKLING DUE TO LOADS FROM WEB-BEARING SUPPORT SYSTEMS.

ALL HORIZONTAL CONSTRUCTION JOINTS BETWEEN PLACEMENTS SHALL BE RAKE FINISHED UNLESS NOTED.

REINFORCING STEEL BARS

BARS SHALL CONFORM TO SECTION 709.1 AND BE OF AASHTO M31 GRADE 60.

ALL BARS IN THE SLAB, BARRIERS, APPROACH SLABS, PORTIONS OF THE INTEGRAL ABUTMENTS ABOVE THE ELEVATION OF THE BRIDGE SEAT AND THE PIER CONTINUITY DIAPHRAGM SHALL BE EPOXY COATED.

PAYMENT WILL BE MADE UNDER ITEM 602001-001, REINFORCING STEEL BAR, AND ITEM 602002-001, EPOXY COATED REINFORCING STEEL BAR.

THE COST OF MECHANICAL COUPLERS SHALL BE INCIDENTAL TO THE COST OF ITEMS 602001-001 AND 602002-001.

ALL MECHANICAL COUPLERS SHALL BE EXPOXY COATED AND SHALL DEVELOP AT LEAST 125% OF THE SPECIFIED YIELD STRENGTH OF THE REINFORCING BAR.

USE LENTON STANDARD COUPLERS BY ERICO, INC. OR APPROVED EQUIVALENT.

ALL REINFORCEMENT SHALL BE LAPPED A MINIMUM OF 30 BAR DIAMETERS UNLESS SHOWN OTHERWISE ON THE PLANS. EMBEDMENT DIMENSIONS FOR REINFORCING ARE CLEAR DIMENSIONS UNLESS NOTED. BAR SPACING IS GIVEN TO THE CENTERLINE OF THE BAR.

THE CLEAR DISTANCE BETWEEN REINFORCING STEEL AND THE FACE OF CONCRETE SHALL BE AS FOLLOWS UNLESS NOTED:

TOP OF DECK SLAB	2½"
BOTTOM OF SLAB	1"
BARRIERS	1½"
BOTTOM OF FOOTINGS	3"
ALL OTHER LOCATIONS	2"

PRIOR TO CONCRETE PLACEMENT, DAMAGED EPOXY COATING SHALL BE REPAIRED BY THE CONTRACTOR AT NO COST TO THE DIVISION.

STRUCTURAL STEEL

THE FABRICATOR'S SHOP DRAWINGS SHALL IDENTIFY THE MATERIAL SPECIFICATION AND GRADE FOR EACH ITEM AND ARE SUBJECT TO APPROVAL OF THE ENGINEER.

PROVIDE A CLASS B SLIP COEFFICIENT FOR THE CONTACT AREA OF BOLTED PARTS.

THE CONTRACTOR ASSUMES FULL RESPONSIBILITY FOR SECURING A HAULING PERMIT. APPROVAL OF GIRDER DETAILS AT THE SHOP DRAWING STAGE DOES NOT OBLIGATE THE DIVISION TO ISSUE OR SECURE A HAULING PERMIT.

FOR ADDITIONAL GENERAL NOTES FOR STRUCTURAL STEEL, SEE NOTES FOR WEATHERING STEEL ON SHEET B6.

GIRDER DEFLECTION AND DECK ELEVATIONS

FOR GIRDER DEFLECTIONS, SEE SHEET B34. GRADE LINES SHALL BE ADJUSTED TO OBTAIN MINIMUM SLAB THICKNESS, IF REQUIRED, AT NO ADDITIONAL COST TO THE DIVISION.

WELDING

NO FIELD WELDING WILL BE PERMITTED UNLESS SHOWN ON THE PLANS OR APPROVED BY THE ENGINEER. ALL WELDING, FABRICATION, AND NONDESTRUCTIVE TESTING SHALL CONFORM TO THE ANSI/AASHTO/AWS BRIDGE WELDING CODE D1.5.

THE ELECTROGAS AND ELECTROSLAG WELDING PROCESSES WILL NOT BE PERMITTED.

DO NOT WELD TO THE GIRDER FLANGES IN TENSION ZONES. TENSION ZONES ARE SHOWN ON GIRDER ELEVATION, SHEET B21.

BOLTS

ALL FASTENERS SHALL BE ⅞" DIAMETER UNLESS NOTED OTHERWISE ON THE PLANS. THE THREADED ENDS OF THE BOLTS ARE TO BE PLACED ON THE INSIDE WHERE PRACTICAL TO PROTECT THE THREADS FROM THE WEATHER.

CONNECTIONS SHALL BE MADE TO EXCLUDE THREADS FROM THE SHEAR PLANE.

FOR ADDITIONAL BOLT REQUIREMENTS SEE THE NOTES FOR WEATHERING STEEL ON SHEET B6.

DIAMETER OF HOLES USED SHALL BE 1/16" LARGER THAN THE NOMINAL DIAMETER OF FASTENERS.

JOINT FILLER

JOINT FILLER FOR VERTICAL JOINTS BETWEEN THE APPROACH SLAB AND THE ABUTMENT AND WINGWALLS SHALL BE PREFORMED EXPANSION JOINT FILLER CONFORMING TO SUBSECTION 708.1.2. THE COST OF THE FILLER SHALL BE INCLUDED IN ITEM 502001-012, "12-INCH PORTLAND CEMENT CONCRETE APPROACH SLAB".

PREFORMED JOINT FILLER ON THE ABUTMENT AND PIER BRIDGE SEATS SHALL BE SPONGE RUBBER, TYPE 1, CONFORMING TO SUBSECTION 708.1.1. THE COST OF THE FILLER SHALL BE INCLUDED IN ITEM 601009-003, "CLASS H CONCRETE, ARCHITECTURAL" AT THE ABUTMENTS AND ITEM 601009-001, "CLASS H CONCRETE" AT THE PIER.

SHEAR CONNECTORS

WELDED SHEAR CONNECTORS SHALL BE INSTALLED IN ACCORDANCE WITH SECTION 615.3.3 OF THE STANDARD SPECIFICATIONS, EXCEPT AS FOLLOWS:

THE CONTRACTOR MAY SHOP INSTALL SHEAR CONNECTORS TO THE GIRDER FOR THE PURPOSE OF ATTACHING A WORKER FALL PROTECTION SYSTEM. ONLY THE SHEAR CONNECTORS REQUIRED TO PROPERLY INSTALL AND SUPPORT THE WORKER FALL PROTECTION SYSTEM MAY BE INSTALLED IN THE SHOP. THE REMAINING SHEAR CONNECTORS FOR AN INDIVIDUAL ROW ACROSS THE GIRDER FLANGE MAY ALSO BE INSTALLED IN THE SHOP. ALL SHOP INSTALLED SHEAR CONNECTORS SHALL BE SHOWN ON THE SHOP DRAWINGS.

THE FIELD INSTALLATION OF THE SHEAR CONNECTORS SHALL NOT COMMENCE PRIOR TO THE INSTALLATION OF THE DECK FORMS IN THE AREA SURROUNDING THE STUDS. EXTERIOR DECK OVERHANG FORMS MAY BE INSTALLED AFTER THE WELDED SHEAR CONNECTORS. THE SHEAR CONNECTORS AND DECK FORMS SHALL BE INSTALLED IN A SEQUENCE THAT PERMITS WORKERS ACCESS THROUGH THE DECK AREA WITHOUT WALKING THROUGH INSTALLED CONNECTORS.

PAYMENT FOR PLACEMENT AND MATERIALS IS INCLUDED IN ITEM 615001-001, "STEEL SUPERSTRUCTURE".

EXCAVATION

EXCAVATION AT ABUTMENTS AND PIER WITHIN LIMITS SHOWN WILL BE PAID FOR AS STRUCTURE EXCAVATION, ITEM 212001-000 AND ROCK EXCAVATION, ITEM 212003-000.

ANY SHORING REQUIRED SHALL BE CONSIDERED INCIDENTAL TO ITEM 212001-000, "STRUCTURE EXCAVATION". IT IS ANTICIPATED THAT SHORING AT THE SUBSTRUCTURE UNITS MAY BE REQUIRED DUE TO THE CLOSE PROXIMITY OF THE EXISTING BRIDGE. SHORING SHALL BE DESIGNED BY A PROFESSIONAL ENGINEER REGISTERED IN THE STATE OF WEST VIRGINIA AND IS SUBJECT TO APPROVAL BY THE ENGINEER.

BEARINGS

THE REINFORCED ELASTOMERIC BEARINGS SHALL BE INSTALLED AT AN AMBIENT TEMPERATURE BETWEEN 40°F AND 80°F.

ELASTOMERIC BEARING AND COMPONENT PARTS SHALL MEET THE REQUIREMENTS OF THE LRFD BRIDGE DESIGN SPECIFICATIONS.

BRIDGE SEATS ON ABUTMENTS AND PIER UNDER BEARING PADS SHALL BE FINISHED TO TRUE PLANES AND ELEVATIONS, UNLESS NOTED.

EXERCISE CAUTION WHILE MAKING FIELD OR SHOP WELDS WHILE AN ELASTOMERIC BEARING PAD IS IN CONTACT WITH THE STEEL. IN NO CASE SHALL THE ELASTOMER OR ELASTOMER BAND BE EXPOSED TO INSTANTANEOUS TEMPERATURES GREATER THAN 400°F. ANY DAMAGE TO THE ELASTOMERIC BEARING DUE TO WELDING WILL BE CAUSE FOR REJECTION. THE TEMPERATURE SHALL BE MONITORED BY HEAT CRAYONS FURNISHED BY THE CONTRACTOR.

BEARINGS TO BE PAID FOR IN ITEM 615029-001, "NON-GUIDED BEARING, ELASTOMERIC".

ALUMINUM RAILING

ALUMINUM RAILING, POSTS AND BASE PLATES SHALL HAVE AN ANODIZED COLORING TO MATCH WEATHERING STEEL COLOR, SUBJECT TO APPROVAL OF THE ENGINEER.

DAMAGED SEEDED AREAS

ANY SEEDED AREA DAMAGED BY THE CONTRACTOR DURING CONSTRUCTION MUST BE REPAIRED BY THE CONTRACTOR AT HIS EXPENSE. THE AREAS SHALL BE SEEDED AND MULCHED IN ACCORDANCE WITH SECTION 652.

REMOVED GUARDRAIL

ALL REMOVED GUARDRAIL SHALL REMAIN THE PROPERTY OF THE DIVISION AND SHALL BE DELIVERED AND UNLOADED BY THE CONTRACTOR DURING NORMAL BUSINESS HOURS TO THE WEST VIRGINIA DEPARTMENT OF TRANSPORTATION AS DIRECTED.

PILING

ALL PILING SHALL BE HP10X57 STEEL PILES AND SHALL CONFORM TO AASHTO M270, GRADE 50, MINIMUM. ALL HP10X57 PILING SHALL HAVE A MAXIMUM DESIGN LOAD OF 176 TONS WHEN COMPARED TO LOADS FACTORED IN ACCORDANCE WITH THE AASHTO LRFD BRIDGE DESIGN SPECIFICATIONS.

PILING (CONTINUED)

PILING SHALL BE PREDRILLED IN ACCORDANCE WITH SECTION 614.4 AND AMENDED AS FOLLOWS:

PREDRILL A MINIMUM 2'-0" DIAMETER HOLE FOR THE PILE TO A DEPTH OF 5'-0" BELOW THE TOP OF ROCK. PLACE THE PILE AND FILL THE ANNULAR SPACE AROUND THE PILE WITH CLASS B CONCRETE TO THE ENCOUNTERED TOP OF ROCK. THE COST OF THE CLASS B CONCRETE IS INCIDENTAL TO ITEM 614001-004. FILL THE REMAINING ANNULAR SPACE AROUND THE PILE FROM TOP OF ROCK TO THE BOTTOM OF THE ABUTMENT WITH NO. 8P AGGREGATE. MAINTAIN A MINIMUM EDGE DISTANCE OF 3" BETWEEN THE PILE AND EDGE OF HOLE. SEE SHEET B9 FOR DETAILS..

NEW STOCK MATERIAL MAY BE USED FOR STEEL PILES PROVIDED THAT EACH PIECE CAN BE IDENTIFIED BY HEAT NUMBER AND PROVIDED THAT CERTIFIED MILL TEST REPORTS ARE FURNISHED TO THE DIVISION INDICATING THAT THE MATERIAL CONFORMS TO THE SPECIFICATIONS.

PAYMENT FOR STEEL PILES SHALL BE INCLUDED IN ITEM 614001-004, "HP10X57 STEEL PILE".

ARCHITECTURAL TREATMENT

ARCHITECTURAL TREATMENT SHALL COMPLY WITH THE REQUIREMENTS OF SECTION 601.8.10 OF THE STANDARD SPECIFICATIONS. PRODUCTION FORMLINERS FOR ARCHITECTURAL TREATMENT SHALL NOT BE ORDERED WITHOUT WRITTEN APPROVAL OF THE ENGINEER. ALL FORMLINERS SHALL BE FROM THE SAME MANUFACTURER AND SAMPLE PANELS SHALL BE SUBMITTED TO THE ENGINEER FOR APPROVAL. SEE SHEET B41 FOR LIMITS AND PATTERN DESIGNATION.

SHOP DRAWINGS

ALL SHOP DRAWINGS WILL BE SUBJECT TO THE REQUIREMENTS OF SECTION 105.2.

SUBMIT SHOP DRAWINGS TO:

HDR ENGINEERING, INC.
333 PENCO ROAD
WEIRTON, WV 26062-3828

THE DESIGN CALCULATIONS AND PLANS FOR ANY PROPOSED FALSEWORK, COFFERDAMS, SHEETING, OR OTHER TEMPORARY SUPPORTS OR BRACING REQUIRED TO CONSTRUCT THE STRUCTURE SHALL BE SIGNED AND SEALED BY A PROFESSIONAL ENGINEER REGISTERED IN THE STATE OF WEST VIRGINIA, BEFORE BEING SUBMITTED TO THE ENGINEER FOR REVIEW.

PRIOR TO IMPOSING ANY CONSTRUCTION LOADS ON THE STRUCTURE OR PORTIONS THEREOF, THE GENERAL CONTRACTOR SHALL SUBMIT PLANS AND SUPPORTING CALCULATIONS, SEALED BY A PROFESSIONAL ENGINEER REGISTERED IN THE STATE OF WEST VIRGINIA, DEMONSTRATING THAT SUCH LOADINGS DO NOT INTRODUCE ANY DETRIMENTAL EFFECTS INTO THE STRUCTURE. THIS INCLUDES ERECTION PLANS AND CALCULATIONS.

SUBSURFACE INVESTIGATION

THE GEOTECHNICAL AND FOUNDATION DESIGNS ARE BASED ON BORINGS DRILLED AND THE SUBSURFACE INVESTIGATION REPORT PREPARED BY HDR ENGINEERING, INC. THIS REPORT INCLUDES THE ENGINEERING LOGS AS COMPILED BY FIELD DATA. THE FIELD LOGS AND REPORT ARE AVAILABLE FOR REVIEW DURING NORMAL BUSINESS HOURS AT THE ADDRESS LISTED ABOVE.

EACH BIDDER IS RESPONSIBLE FOR REVIEWING THESE MATERIALS, AND IS PRESUMED TO HAVE CONSIDERED THESE MATERIALS IN THEIR BID PREPARATION.

SPECIAL PROVISIONS

THE FOLLOWING IS NOT A COMPLETE LIST OF SPECIAL PROVISIONS. SEE THE PROPOSAL FOR A LIST OF ALL SPECIAL PROVISIONS.

DISMANTLING STRUCTURES
STRUCTURAL CONCRETE CLASS H BRIDGE DECKS
ELASTOMERIC BEARINGS

ERECTION REQUIREMENTS

THE CONTRACTOR'S ATTENTION IS DIRECTED TO SECTIONS 615.6, ERECTION AND 615.2.2, ERECTION DRAWINGS, OF THE STANDARD SPECIFICATIONS.

REVISION NUMBER	SHEET NUMBER	REVISION	DATE	BY

THE WEST VIRGINIA DEPARTMENT OF TRANSPORTATION
DIVISION OF HIGHWAYS

THREE SPRINGS DRIVE BRIDGE REPLACEMENT

GENERAL NOTES

HDR ENGINEERING, INC.
CONSULTING ENGINEERS
WEIRTON, WV (304) 748-8740

DESIGNED BY APR	DRAWN BY APR	CHECKED BY JWB	BRIDGE NO. 10565
DATE 07-05	DATE 07-05	DATE 08-05	SHEET NO. B5

FILE: x:\1436\bridge\STR_40_3SPR1.dgn

PUBLIC ROADS DIV.	STATE DIST. NO.	STATE PROJECT NO.	FEDERAL PROJECT NO.	FISCAL YEAR	COUNTY	SHEET NO.	TOTAL SHEETS
W.V.	6	U305-13 -0.02 00	BR-0013 (042)E	2006	BROOKE	79	163

GENERAL NOTES (CONTINUED)

DIMENSIONS AND ELEVATIONS

THE CONTRACTOR SHALL REFER TO THE ORIGINAL DESIGN DRAWINGS FOR THE EXISTING BRIDGE DETAILS. THESE DRAWINGS ARE ATTACHED TO THIS SET OF PLANS. THE DEPARTMENT DOES NOT GUARANTEE THE ACCURACY OF THESE DRAWINGS.

IT SHALL BE THE CONTRACTOR'S RESPONSIBILITY TO VERIFY DIMENSIONS AND ELEVATIONS AFFECTING ALL WORK IN THE FIELD. NO SEPARATE OR ADDITIONAL COMPENSATION WILL BE ALLOWED FOR THIS WORK.

BACKFILL

THE CONTRACTOR SHALL BACKFILL AROUND THE SUBSTRUCTURE AS SOON AS POSSIBLE AFTER REMOVAL OF FORMS AND FALSEWORK AND SLOPE SURFACES TO DRAIN IN ACCORDANCE WITH SECTION 212.10.

ITEM 212005-000, "SELECT MATERIAL FOR BACKFILLING", SHALL BE PLACED TO THE DIMENSIONS SHOWN ON THE PLANS AND IN ACCORDANCE WITH SECTION 212.10. NO PAYMENT WILL BE MADE FOR MATERIAL PLACED BEYOND THE PAYLINES SHOWN ON THE PLANS.

6 INCH DIAMETER UNDERDRAIN PIPE MEETING THE REQUIREMENTS OF SECTION 714.19 SHALL BE INSTALLED AS SHOWN ON THE PLANS. ONLY PORTIONS OF THE PIPE WHICH LIE WITHIN THE SELECT BACKFILL SHALL HAVE PERFORATIONS. COST FOR THE UNDERDRAIN PIPE SHALL BE INCIDENTAL TO THE UNIT PRICE BID FOR ITEM 212005-000, "SELECT MATERIAL FOR BACKFILLING".

EXISTING BRIDGE/DISMANTLING STRUCTURE

THE EXISTING BRIDGE INCLUDING APPROACH SLABS SHALL BE REMOVED IN ITS ENTIRETY, EXCEPT AS NOTED BELOW. PAYMENT SHALL BE INCLUDED IN ITEM 203001-001, "DISMANTLING STRUCTURE (2360)".

THE BRIDGE SHALL REMAIN IN SERVICE UNTIL THE FIRST PORTION OF THE NEW STRUCTURE IS CONSTRUCTED AND IS OPEN TO TRAFFIC, AT WHICH TIME THE EXISTING BRIDGE WILL BE REMOVED IN ITS ENTIRETY EXCEPT AS NOTED BELOW. SEE CONSTRUCTION STAGING SHEET B7 FOR ADDITIONAL DETAILS.

REMOVE ABUTMENTS AND PIER 2 IN THEIR ENTIRETY. ALL PILING AT THE ABUTMENTS SHALL BE PULLED.

REMOVE EXISTING PIER 1 AND 3 TO AN ELEVATION AT LEAST 2 FEET BELOW THE FINISHED GROUND LINE.

MATERIAL FROM THE EXISTING BRIDGE THAT IS REMOVED SHALL BECOME THE PROPERTY OF THE CONTRACTOR AND SHALL BE REMOVED FROM THE RIGHT OF WAY AND DISPOSED OF PROPERLY.

GROUND LINES, FINAL SLOPES AND SLOPE DRESSING SHALL BE AS DIRECTED BY THE ENGINEER.

NOTES FOR WEATHERING STEEL

STRUCTURAL STEEL

THE LUMP SUM BID FOR ITEM 615001-001, "STEEL SUPERSTRUCTURE", SHALL INCLUDE ALL STRUCTURAL STEEL, GALVANIZING AND ANY PAINTING, ALL COMPLETELY IN PLACE.

ALL STRUCTURAL STEEL, EXCEPT AS NOTED, SHALL MEET AASHTO M270 GRADE 50W. GIRDER FLANGES, WEBS, AND SPLICE PLATES SHALL MEET GRADE 50W-T2.

HIGH STRENGTH FASTENERS SHALL MEET SECTION 709.24 AND SHALL BE BLACK (UNCOATED) TYPE 3 (WEATHERING STEEL). THE HIGH STRENGTH FASTENERS USED IN REGIONS OF THE STRUCTURE THAT REQUIRE PAINTING SHALL BE TYPE 1 OR 3 AND SHALL BE MECHANICALLY GALVANIZED.

BEFORE ASSEMBLING THE HIGH STRENGTH BOLTED CONNECTIONS, REMOVE ALL LOOSE AND NON-ADHERENT RUST THAT MAY HAVE FORMED ON THE CONNECTION AREAS BY HAND OR POWER WIRE BRUSHING.

BLAST CLEANING AND PAINTING

UPON COMPLETION OF ALL FABRICATION OPERATIONS IN THE SHOP, AND BEFORE SHIPMENT TO THE PROJECT SITE, ALL WEATHERING STEEL BRIDGE COMPONENTS SHALL BE BLAST CLEANED TO A NEAR WHITE SURFACE CONDITION ACCORDING TO SSPC-SP 10. PRIOR TO THE START OF ANY BLAST CLEANING, ALL OIL, GREASE, CUTTING FLUIDS OR OTHER FOREIGN MATTER SHALL BE REMOVED FROM THE SURFACES OF THE STEEL BY SOLVENT CLEANING ACCORDING TO SSPC-SP 1.

THE MEMBERS OR PORTIONS OF MEMBERS LISTED BELOW SHALL BE BLAST CLEANED AND SHOP PAINTED ACCORDING TO SECTION 688, USING THE ZING RICH, LOW VOC SYSTEM, SECTION 711.22. APPLY THE FULL PAINT SYSTEM IN THE FABRICATION SHOP, EXCEPT FAYING SURFACES OF HIGH STRENGTH BOLTED CONNECTIONS, WHICH SHALL BE SHOP PAINTED WITH PRIMER ONLY. THE COLOR OF THE FINAL TOP COAT SHALL BE 30045 ACCORDING TO FEDERAL STANDARD 595 AND THE GLOSS AT A 60 DEGREE ANGLE SHALL NOT EXCEED 25.

PAINT THE END 4'-0" OF THE GIRDERS AND ALL OTHER STRUCTURAL COMPONENTS ENCASED IN THE CONCRETE ABUTMENT AND CONTINUITY DIAPHRAGM AT PIER.

BLAST CLEANING AND PAINTING (CONTINUED)

AREAS OF THE SHOP APPLIED PAINT SYSTEM WHICH ARE DAMAGED DURING ERECTION AND HIGH STRENGTH BOLTED CONNECTION AREAS THAT WERE ONLY PRIME PAINTED SHALL BE PROPERLY CLEANED AND PAINTED ACCORDING TO SECTION 688 OF THE STANDARD SPECIFICATIONS, PAINT STEEL STRUCTURES, AND TO THE SATISFACTION OF THE ENGINEER.

AFTER COMPLETION OF ALL TIGHTENING OPERATIONS, MECHANICALLY GALVANIZED FASTENERS SHALL BE SOLVENT CLEANED AND FIELD PAINTED AS SPECIFIED FOR THE STRUCTURAL STEEL.

INCLUDE CLEANING AND PAINTING COST IN ITEM 615001-001, "STEEL SUPERSTRUCTURE".

THE CREVICE BETWEEN THE EMBEDDED STEEL AND THE CONCRETE AT THE ABUTMENTS AND PIER SHALL BE CHAMFERED TO PROVIDE FOR PLACEMENT OF A SEALANT. SEAL THE CREVICE WITH A SEALANT MATERIAL MEETING THE REQUIREMENTS OF ASTM C920, TYPE S, GRADE NS, CLASS 25, USES NT AND M. SEALANT SHALL BE SUITABLE FOR BONDING BETWEEN CONCRETE AND THE TOP COAT OF THE SPECIFIED PAINT SYSTEM. ACID-CURE SEALANTS ARE NOT ALLOWED. INCLUDE PAYMENT IN ITEM 615001-002, "STEEL SUPERSTRUCTURE".

IDENTIFICATION MARKING STEEL MEMBERS

ALL STEEL MILL AND FABRICATOR IDENTIFICATION MARKINGS FOR STEEL PLATES, SHAPES OR FABRICATED MEMBERS SHALL BE BY METAL TAGS, SOAPSTONE, OR SOME OTHER READILY REMOVABLE MATERIAL; OR, SHALL BE MARKED IN AN AREA OF THE COMPLETED MEMBER WHICH WILL BE ENCASED OR COVERED WITH CONCRETE. MARKING METHODS AND LOCATIONS ARE SUBJECT TO APPROVAL OF THE ENGINEER.

DO NOT USE PAINT OR WAX-BASED CRAYONS FOR MARKINGS.

HANDLING AND STORING STEEL MEMBERS

STEEL MEMBERS MUST NOT BE GOUGED, SCRATCHED, DENTED OR ALLOWED TO RUB AGAINST OTHER MEMBERS THAT WOULD RESULT IN DAMAGE TO THE BLAST CLEANED PROFILE OF THE STEEL. MEMBERS SHALL BE HANDLED USING SOFTENERS AND SLINGS INSTEAD OF CHOKERS AND CHAINS.

STORE MEMBERS IN THE FABRICATION SHOP AND ON THE PROJECT SITE IN SUCH A MANNER AS TO BE KEPT FREE AND CLEAN OF ALL FOREIGN SUBSTANCES SUCH AS GREASE, OIL, MORTAR AND CONCRETE SPLATTER, CHALK AND CRAYON MARKS, PAINT AND DIRT. ALL STORAGE MUST BE ABOVE GROUND AND SLOPED TO ALLOW FREE DRAINAGE OF MELTED SNOW, RAINWATER AND DEW. IF THE MEMBERS ARE STORED FOR PERIODS LONGER THAN THREE MONTHS, THE MEMBERS MUST BE PLACED ON METAL SUPPORTS. FOR PERIODS OF STORAGE UP TO 3 MONTHS, MEMBERS MAY BE PLACED ON CLEAN, UNTREATED, WOOD TIMBERS.

STORE PLATE GIRDERS AND ROLLED BEAMS WITH THE WEB IN THE UPRIGHT POSITION. THE MEMBERS MAY BE STACKED PROVIDED METAL OR WOOD SUPPORTS, AS NOTED ABOVE, SEPARATE INDIVIDUAL MEMBERS. UNDER NO CIRCUMSTANCE SHALL MEMBERS BE NESTED TOGETHER OR BUNDLED.

DO NOT ALLOW TREATED LUMBER OR TREATED TIMBER TO CONTACT STEEL MEMBERS. CONTACT WITH CLEAN, UNTREATED LUMBER OR TIMBER WILL NOT DAMAGE THE STEEL MEMBERS.

FINAL CLEANUP OF STRUCTURAL STEEL SURFACES

UPON COMPLETION OF ALL CONCRETE CURING OPERATIONS, THE CONTRACTOR SHALL CLEAN ALL STEEL SURFACES TO REMOVE ALL GREASE, OIL, CONCRETE RESIDUE, DIRT AND OTHER FOREIGN SUBSTANCES TO THE SATISFACTION OF THE ENGINEER.

CLEANING MAY BE BY HIGH PRESSURE WATER, POWER AND/OR HAND WIRE BRUSHING, AND/OR BY BRUSH-OFF BLAST CLEANING ACCORDING TO SSPC-SP 7. CLEANING SHALL BE FOLLOWED BY A CLEAN WATER RINSE TO REMOVE ALL RESIDUES OF DETERGENTS AND CLEANERS IF THEY WERE USED. ALL GREASE AND OIL SHALL BE REMOVED PRIOR TO THE CLEAN WATER RINSE BY SOLVENT CLEANING.

DO NOT USE ACIDS TO REMOVE STAINS.

INCLUDE COSTS FOR FINAL CLEANUP OF STEEL SURFACES IN ITEM 615001-001, "STEEL SUPERSTRUCTURE".

PROTECTION OF CONCRETE SUBSTRUCTURE

BEFORE PLACING ANY STEEL SUPERSTRUCTURE MEMBERS ON THE CONCRETE SUBSTRUCTURE UNITS, THE CONTRACTOR SHALL COAT ALL EXPOSED AREAS OF THE ABUTMENTS, TOPS, SIDES AND ALL FACES OF PIER CAPS AND PIER STEMS TO THE GROUND LINE ELEVATION WITH AN APPROVED SILANE BASED CONCRETE SEALER. PREPARATION OF SURFACES, APPLICATION RATES AND METHODS SHALL BE AS RECOMMENDED BY THE SILANE MANUFACTURER.

THE CONTRACTOR SHALL TAKE APPROPRIATE MEASURES TO PROTECT THE CONCRETE SUBSTRUCTURE FROM RUST STAINING DURING CONSTRUCTION AND CURING OF SUPERSTRUCTURE CONCRETE. WATER RUNOFF FROM CONCRETE CURING OPERATIONS SHALL BE DEFLECTED AWAY FROM THE STEEL GIRDERS AND SHALL NOT DRAIN ONTO THE SUBSTRUCTURE CONCRETE AFTER CONTACTING THE WEATHERING STEEL.

PROTECTION OF CONCRETE SUBSTRUCTURE (CONTINUED)

UPON COMPLETION OF ALL SUPERSTRUCTURE CONCRETE CURING OPERATIONS, THE CONTRACTOR SHALL REMOVE ALL RUST STAINS FROM SUBSTRUCTURE UNITS USING PROPRIETARY CHEMICAL STAIN REMOVERS OR MILD ACID ETCHING. ABRASIVE BLAST CLEANING MAY BE USED TO SUPPLEMENT THE OTHER CLEANING METHODS IF THE STAINED AREAS ARE SEVERE OR EXTENSIVE. ALL CLEANING METHODS SHALL BE SUBJECT TO APPROVAL OF THE ENGINEER.

RE-COAT ALL AREAS WHERE RUST STAINS WERE REMOVED, REGARDLESS OF THE CLEANING METHOD USED, WITH AN APPROVED SILANE BASED CONCRETE SEALER AS SPECIFIED ABOVE.

INCLUDE THE COST OF SILANE COATING, PROTECTING, CLEANING AND RE-COATING SUBSTRUCTURE UNITS IN ITEMS 601002-001, "CLASS B CONCRETE", AND 601002-003, "CLASS B CONCRETE, ARCHITECTURAL".

REVISION NUMBER	SHEET NUMBER	REVISION	DATE	BY

THE WEST VIRGINIA DEPARTMENT OF TRANSPORTATION
DIVISION OF HIGHWAYS

THREE SPRINGS DRIVE BRIDGE REPLACEMENT

GENERAL NOTES

HDR ENGINEERING, INC.
CONSULTING ENGINEERS
WEIRTON, WV (304) 748-8740

DESIGNED BY APR	DRAWN BY APR	CHECKED BY JWB	BRIDGE NO. 10565
DATE 07-05	DATE 07-05	DATE 08-05	SHEET NO. B6

FILE:\\x:\1436\1\bridge\STR_XAG_3SPRE.dgn

PUBLIC ROADS DIV.	STATE DIST. NO.	STATE PROJECT NO.	FEDERAL PROJECT NO.	FISCAL YEAR	COUNTY	SHEET NO.	TOTAL SHEETS
W.V.	6	U305-13 -0.02 00	BR-0013 (042)E	2006	BROOKE	80	163

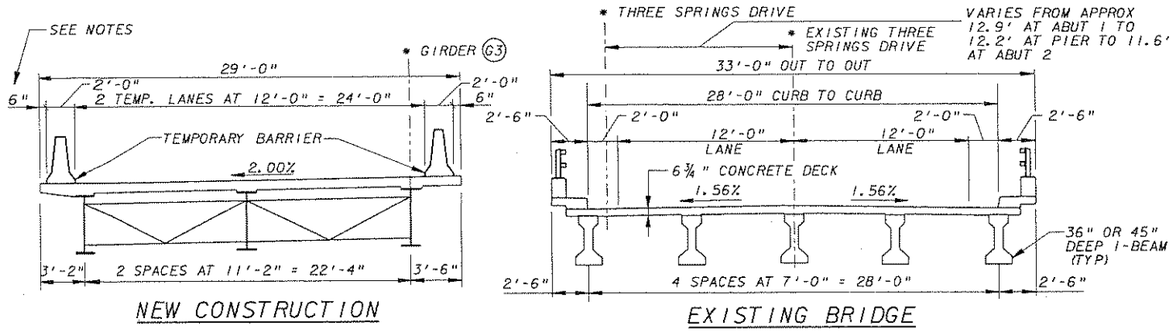

STAGE 1 CONSTRUCTION

NO SCALE

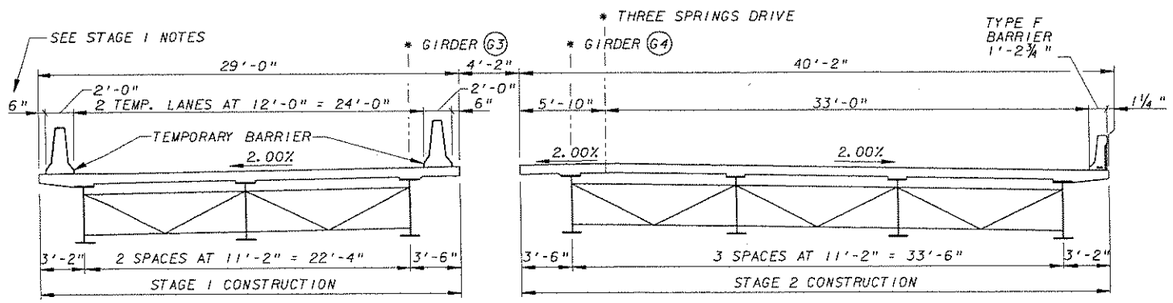

STAGE 2 CONSTRUCTION

NO SCALE

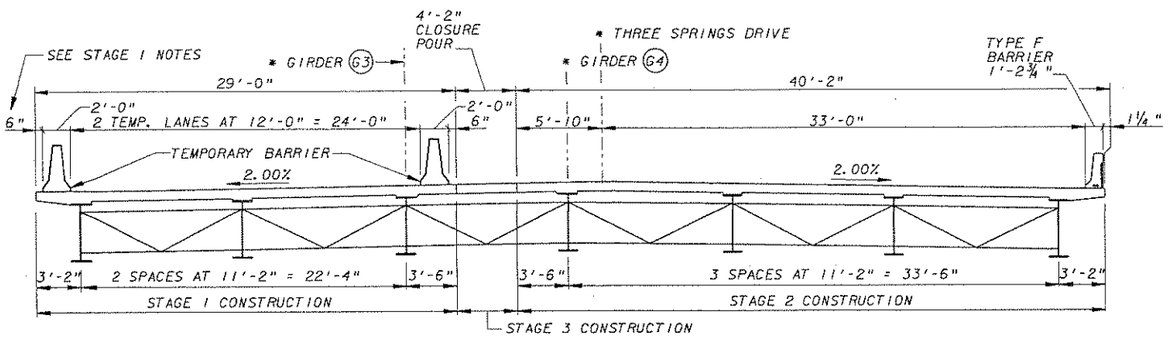

STAGE 3 CONSTRUCTION

NO SCALE

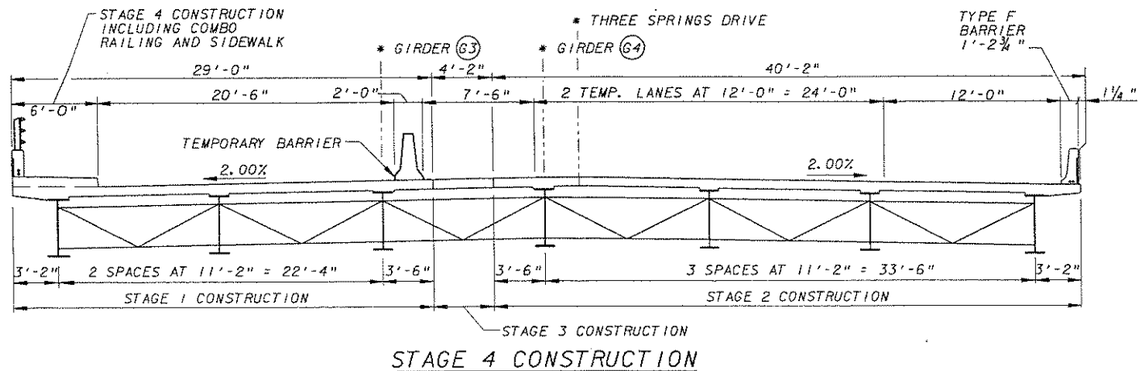

STAGE 4 CONSTRUCTION

NO SCALE

STAGE 1:

- CONSTRUCT PORTIONS OF THE SUBSTRUCTURE UNITS INDICATED AS STAGE 1 CONSTRUCTION ON THE SUBSTRUCTURE DRAWINGS. PROVIDE SHORING AS REQUIRED (SEE GENERAL NOTES).
- PLACE BEARINGS AND ERECT GIRDERS G1 THROUGH G3 AND CROSSFRAMES BETWEEN THEM.
- PLACE THE POSITIVE MOMENT REGIONS OF THE 8" CLASS H CONCRETE DECK SLAB INDICATED IN THE DETAIL (REGION 1, SH B30).
- THE TOP FLANGE CONTINUITY SPLICE PLATES AND THE STEEL SHIMS BETWEEN THE STEEL CONTINUITY BEARING PLATES SHALL NOT BE INSTALLED UNTIL AFTER THE POSITIVE MOMENT REGION DECK POURS (REGION 1).
- REMOVE THE TEMPORARY BRACING BETWEEN GIRDERS G1, G2 AND G3 AT THE ABUTMENTS AND PIER. PLACE THE STAGE 1 PORTION OF THE ABUTMENT BACKWALLS, AND STAGE 1 PORTION OF THE CONTINUITY DIAPHRAGM AT THE PIER (REGION 2, SH B30).
- CONSTRUCT PORTION OF THE APPROACH SLABS INDICATED AS STAGE 1 CONSTRUCTION ON THE APPROACH SLAB DRAWINGS.
- PROVIDE 2" OF ASPHALT OVER ENTIRE APPROACH SLAB. PROVIDE BOND BREAKER FOR LIMITS OF SIDEWALK.
- INSTALL TEMPORARY BARRIERS AND DIVERT TRAFFIC FROM THE EXISTING BRIDGE ONTO THE FIRST STAGE OF THE NEW STRUCTURE.
- OFFSET OF TEMPORARY BARRIER FROM LEFT EDGE OF NEW STRUCTURE IS TYPICALLY 6". TRANSITION OFFSET FROM 6" TO AN OVERHANG OF 3" AT THE BACKFACE OF EACH ABUTMENT OVER A MINIMUM DISTANCE OF 12'-0". REFER TO ABUTMENT SHEET B13 AND APPROACH SLAB SHEET B37 FOR ADDITIONAL DETAILS.

STAGE 2:

- DISMANTLE THE EXISTING STRUCTURE AS INDICATED IN THE GENERAL NOTES AND SPECIAL PROVISIONS.
- CONSTRUCT THE REMAINING PORTIONS OF THE SUBSTRUCTURE UNITS.
- PLACE THE BEARINGS AND ERECT GIRDERS G4 THROUGH G7 AND THE CROSSFRAMES BETWEEN THEM.
- PLACE THE POSITIVE MOMENT REGIONS OF THE 8" CLASS H CONCRETE DECK SLAB INDICATED IN THE DETAIL (REGION 3, SH B30).
- THE TOP FLANGE CONTINUITY SPLICE PLATES AND THE STEEL SHIMS BETWEEN THE STEEL CONTINUITY BEARING PLATES SHALL NOT BE INSTALLED UNTIL AFTER THE POSITIVE MOMENT REGION DECK POURS (REGION 3).
- REMOVE THE TEMPORARY BRACING BETWEEN GIRDERS G4, G5, G6 AND G7 AT THE ABUTMENTS AND PIER. PLACE THE REMAINING PORTIONS OF THE ABUTMENT BACKWALLS AND CONTINUITY DIAPHRAGM AT THE PIER (REGION 4, SH B30).
- PLACE EAST PARAPET.

STAGE 3:

- ERECT THE CROSSFRAMES BETWEEN GIRDERS G3 AND G4 (FIELD DRILL HOLES AS INDICATED ON THE CROSSFRAME DETAILS, SHEET B24.) AND INSTALL REMOVABLE FORMWORK FOR DECK BETWEEN G3 AND G4.
- PLACE CLOSURE POUR FOR 8" CLASS H CONCRETE DECK (REGION 5, SH B30).
- CONSTRUCT REMAINING PORTION OF APPROACH SLABS.
- SHIFT TRAFFIC TO EAST PORTION OF NEW STRUCTURE.
- REMOVE WEST TEMPORARY BARRIER AND REPAIR DECK AS SHOWN IN DETAIL.
- REMOVE FORM WORK FROM DECK BETWEEN G3 AND G4.

STAGE 4:

- REMOVE TEMPORARY ASHPALT FROM APPROACH SLABS FOR LIMITS OF SIDEWALK.
- PLACE SIDEWALK CONCRETE AND COMBO RAIL CONCRETE.
- INSTALL ALUMINUM RAILING AND LIGHTING POLE.
- REMOVE TEMPORARY BARRIER AND REPAIR DECK AS SHOWN IN DETAIL.
- OPEN COMPLETED STRUCTURE TO TRAFFIC.
- CONSTRUCT SLOPE PROTECTION AS SHOWN IN PLANS.

SEQUENCE OF CONSTRUCTION

THE SEQUENCE OF CONSTRUCTION SHOWN IS THE ANTICIPATED SCHEME FOR WHICH THE DESIGN PARAMETERS PRESENTED IN THESE PLANS WERE DEVELOPED. ADJUSTMENTS TO THIS SCHEME MAY BE MADE AT THE DISCRETION OF THE ENGINEER. THE SEQUENCE SHOWN IS FOR INFORMATION ONLY AND IS NOT ALL-INCLUSIVE, AND DOES NOT RELIEVE THE CONTRACTOR FROM PERFORMING ANY OF THE WORK DESCRIBED IN THESE PLANS, BUT NOT EXPLICITLY MENTIONED HERE, TO THE SATISFACTION OF THE ENGINEER.

CONSTRUCTION SEQUENCE SHALL BE COORDINATED WITH THE MAINTENANCE OF TRAFFIC DRAWINGS.

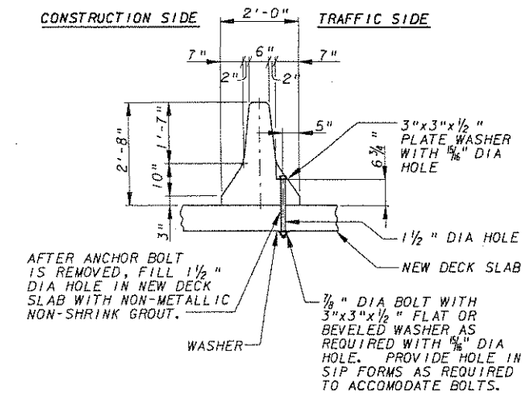

STRUCTURE MOUNTED TEMPORARY CONCRETE BARRIER

NO SCALE

NOTES:

- CONCRETE BARRIER ANCHOR BOLTS SHALL BE 2'-0" MAX ON CENTER.
- CONCRETE BARRIER SECTION LENGTHS MAY VARY TO SUIT FIELD CONDITIONS. THE LENGTH OF A SECTION SHALL NOT BE LESS THAN 4'-0".
- FOR ADDITIONAL NOTES AND DELINEATOR DETAILS, SEE WV STANDARD SHEET TE11-5.

NOTES:

1. FOR GENERAL NOTES, SEE SH B5 AND B6.
2. FOR CONSTRUCTION JOINT LOCATIONS IN ABUTMENTS AND PIER, SEE SH B8, B10 AND B16.

REVISION NUMBER	SHEET NUMBER	REVISION	DATE	BY

THE WEST VIRGINIA DEPARTMENT OF TRANSPORTATION
DIVISION OF HIGHWAYS

THREE SPRINGS DRIVE BRIDGE REPLACEMENT

CONSTRUCTION STAGING DETAILS

HDR ENGINEERING, INC.
CONSULTING ENGINEERS
WEIRTON, WV (304) 748-8740

DESIGNED BY JWB	DRAWN BY JWB	CHECKED BY APR	BRIDGE NO. 10565
DATE 06-05	DATE 06-05	DATE 08-05	SHEET NO. 87

FILENAME \ 4361 \ BRIDGE STR_CON_TSPR.dgn

PUBLIC ROADS DIV.	STATE DIST. NO.	STATE PROJECT NO.	FEDERAL PROJECT NO.	FISCAL YEAR	COUNTY	SHEET NO.	TOTAL SHEETS
W.V.	6	U305-13 -0.02 00	BR-0013 (042)E	2006	BROOKE	81	163

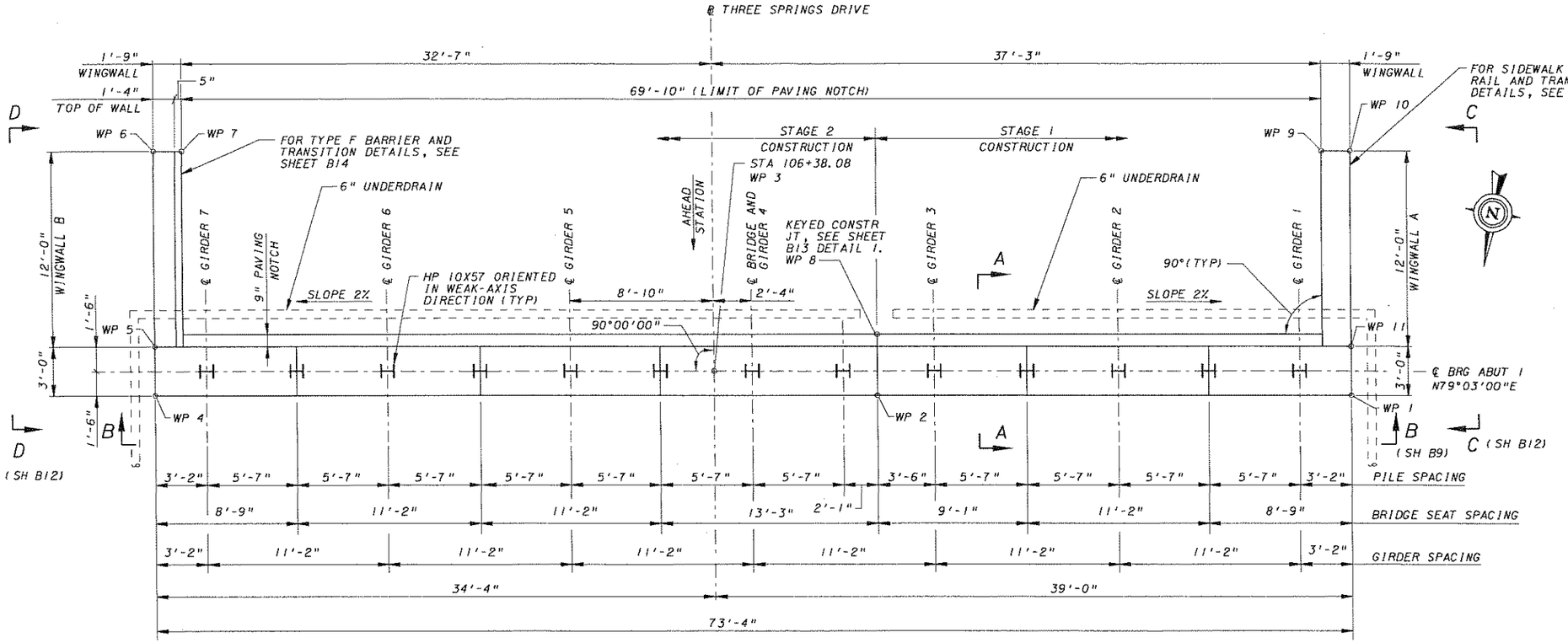

ABUTMENT 1 PLAN

4' 2' 0 4'
1/4" = 1'-0"

QUANTITIES - ABUTMENT 1

ITEM	DESCRIPTION	UNIT	QUANTITY
212001-000	STRUCTURE EXCAVATION	CY	49
212005-000	SELECT MATERIAL FOR BACKFILLING	CY	123
218004-001	8 INCH CRUSHED ROCK SLOPE PROTECTION	SY	430
601002-003	CLASS B CONCRETE, ARCHITECTURAL	CY	54
601009-001	CLASS H CONCRETE	CY	1
601009-003	CLASS H CONCRETE, ARCHITECTURAL	CY	45
602002-001	EPOXY COATED REINFORCING STEEL BAR	LB	11,702
614001-004	HP10X57 STEEL PILE	LF	230
	SILANE PROTECTIVE COATING (FOR INFORMATION ONLY)	SF	611

NOTES:

1. FOR GENERAL NOTES, SEE SH B5 AND B6.
2. WORK SHEETS B8, B9 AND B12 THROUGH B14 TOGETHER.
3. FOR REINFORCEMENT BAR SCHEDULE, SEE SH B15.
4. ALL REINFORCING SPACINGS SHOWN ARE MAXIMUMS.
5. FOR ARCHITECTURAL TREATMENT DETAILS, SEE SH B41.
6. FOR BEARING DETAILS, SEE SH B27.
7. FOR STAKE-OUT PLAN, SEE SH B3.
8. DESIGN PILE LOAD AND RESISTANCE:
   MAXIMUM FACTORED PILE LOAD - 91 TONS
   FACTORED PILE RESISTANCE - 176 TONS
9. FOR DECK PAVING PLAN, SEE SH B28.
10. FOR EXCAVATION PAY LIMITS, SEE SH B10.
11. MEMBRANE WATERPROOFING IN ACCORDANCE WITH SECTION 619. INCIDENTAL TO ITEM 601002-003 "CLASS B CONCRETE, ARCHITECTURAL". (LAP 2'-0" MIN ONTO INSIDE FACE OF WINGWALLS)
12. THE ABUTMENT BACKWALLS ARE INTEGRALLY CAST WITH THE DECK. THE GIRDERS ARE EMBEDDED 9" BEYOND THE BEARING LINE. CHAMFER THE CREVICE BETWEEN THE GIRDER AND BACKWALL 1" AND SEAL IT WITH A COMPATIBLE MATERAL. (ASTM C920, TYPE S, GRADE NS, CLASS 25, USES NT AND M).
13. FOR APPROACH SLAB DETAILS, SEE SH B37 THROUGH B40.
14. 6" DIAMETER PERFORATED UNDERDRAIN TO BE CAPPED AT HIGH END, SLOPED BELOW WINGWALL AND TURNED TO EXIT THROUGH 8" CRUSHED ROCK SLOPE PROTECTION AS SHOWN IN PLAN. UNDERDRAIN IS INCIDENTAL TO 212005-000 "SELECT MATERIAL FOR BACKFILLING".
15. THE COST OF FILTER FABRIC AT THE LIMITS OF SELECT MATERIAL FOR BACKFILLING IS INCIDENTAL TO ITEM 212005-000, "SELECT MATERIAL FOR BACKFILLING".
16. FOR LIMITS OF SLOPE PROTECTION AND CONCRETE SILL, SEE SH B10.

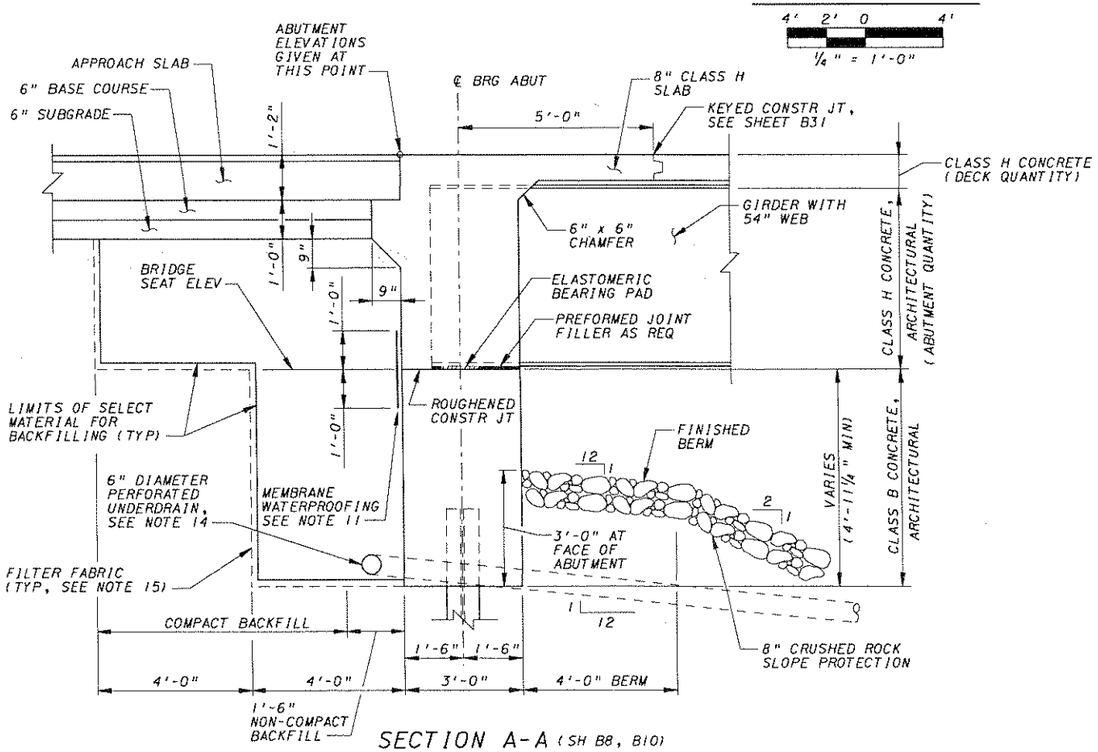

SECTION A-A (SH B8, B10)

2' 1' 0 2'
1/2" = 1'-0"

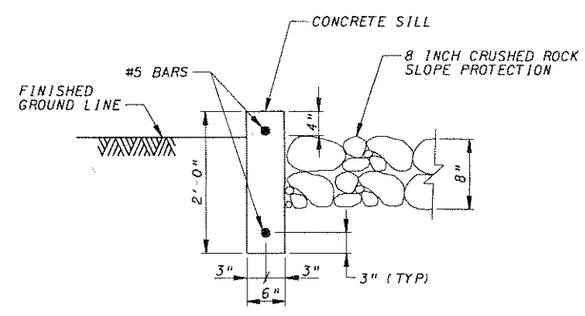

CONCRETE SILL DETAIL

NO SCALE

1. SEE SHEETS B1 AND B10 FOR LOCATION OF CONCRETE SILLS AND LIMITS OF SLOPE PROTECTION AROUND ABUTMENTS.
2. CONSTRUCTION SHALL BE IN ACCORDANCE WITH SECTION 218.
3. CONCRETE FOR SILLS SHALL BE CLASS B CONCRETE.
4. PAYMENT FOR CONCRETE AND REINFORCEMENT TO BE INCLUDED IN ITEM 218004-001, "8 INCH CRUSHED ROCK SLOPE PROTECTION". ESTIMATED SILL QUANTITIES ARE 9 CY OF CONCRETE AND 510 LB OF #5 REINFORCING AT ABUTMENT 1 AND 9 CY OF CONCRETE AND 480 LB OF #5 REINFORCING AT ABUTMENT 2 (FOR INFORMATION ONLY).
5. PLACE 3/4" PREFORMED JOINT FILLER SEALED WITH HOT POURED JOINT SEALER AT LOCATIONS WHERE CONCRETE SILL CONTACTS WINGWALLS. PREFORMED JOINT FILLER SHALL BE IN ACCORDANCE WITH SUBSECTION 708.1.2 AND INCLUDED IN ITEM 218004-001.

REVISION NUMBER	SHEET NUMBER	REVISION	DATE	BY

THE WEST VIRGINIA DEPARTMENT OF TRANSPORTATION
DIVISION OF HIGHWAYS

THREE SPRINGS DRIVE BRIDGE REPLACEMENT

ABUTMENT 1

PLAN AND SECTION

HDR ENGINEERING, INC.
CONSULTING ENGINEERS
WEIRTON, WV (304) 748-8740

DESIGNED BY JWB	DRAWN BY BJS	CHECKED BY APR	BRIDGE NO. 10565
DATE 06-05	DATE 06-05	DATE 08-05	SHEET NO. B8

FILE:H:\1436\bridge\STR_ABT_3SPRI.dgn

PUBLIC ROADS DIV.	STATE DIST. NO.	STATE PROJECT NO.	FEDERAL PROJECT NO.	FISCAL YEAR	COUNTY	SHEET NO.	TOTAL SHEETS
W.V.	6	U305-13 -0.02 00	BR-0013 (042)E	2006	BROOKE	82	163

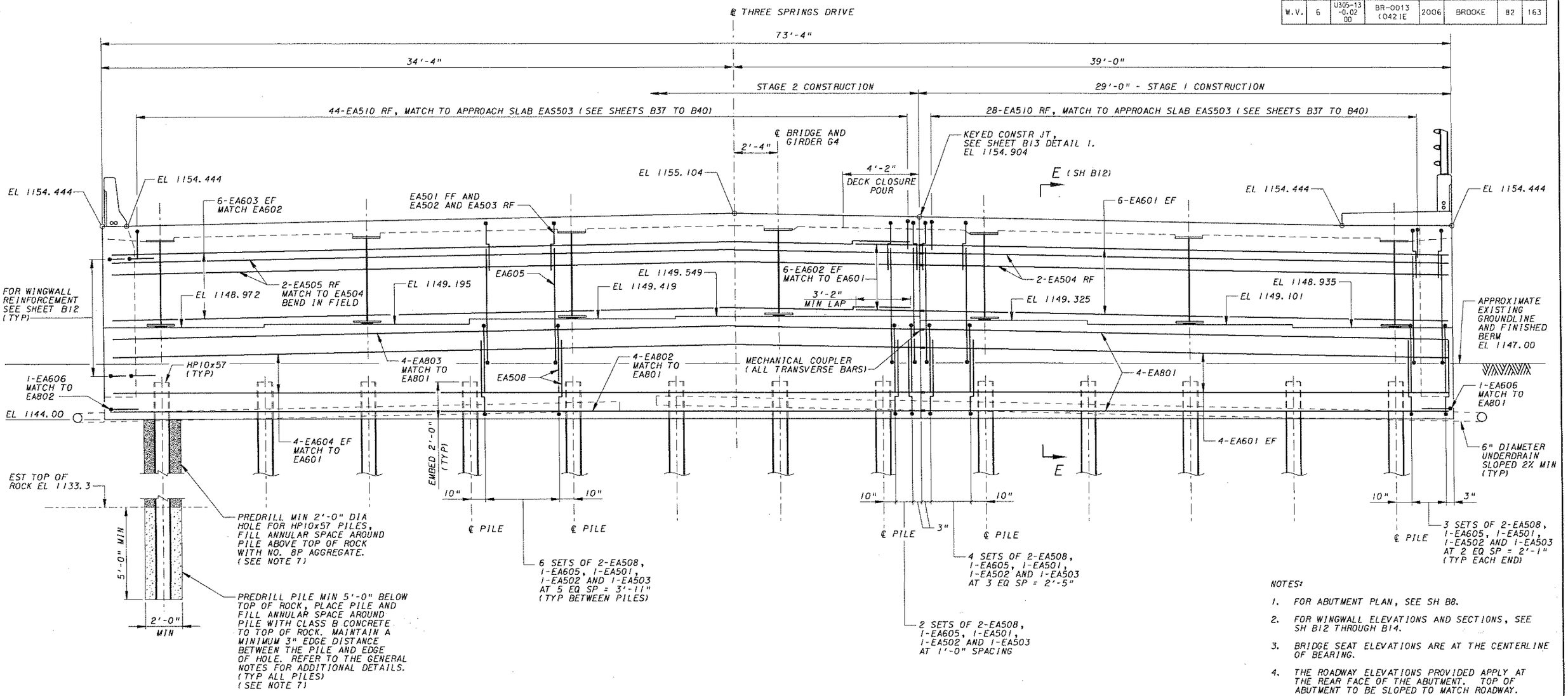

VIEW B-B (SH B8)

32" 16" 0 2.66'

⅜" = 1'-0"

NOTES:

1. FOR ABUTMENT PLAN, SEE SH B8.
2. FOR WINGWALL ELEVATIONS AND SECTIONS, SEE SH B12 THROUGH B14.
3. BRIDGE SEAT ELEVATIONS ARE AT THE CENTERLINE OF BEARING.
4. THE ROADWAY ELEVATIONS PROVIDED APPLY AT THE REAR FACE OF THE ABUTMENT. TOP OF ABUTMENT TO BE SLOPED TO MATCH ROADWAY.
5. ALL ELEVATIONS ARE IN FEET.
6. FF INDICATES FRONT FACE
   RF INDICATES REAR FACE
   EF INDICATES EACH FACE
7. THE COST OF CLASS B CONCRETE AND NO. 8P AGGREGATE AROUND PILES IS INCIDENTAL TO ITEM 614001-004 "HP10x57 STEEL PILE".
8. FOR ADDITIONAL NOTES, SEE SH B8.

REVISION NUMBER	SHEET NUMBER	REVISION	DATE	BY

THE WEST VIRGINIA DEPARTMENT OF TRANSPORTATION
DIVISION OF HIGHWAYS

THREE SPRINGS DRIVE BRIDGE REPLACEMENT

ABUTMENT 1

ELEVATION

HDR ENGINEERING, INC.
CONSULTING ENGINEERS
WEIRTON, WV (304) 748-8740

DESIGNED BY JWB	DRAWN BY BJS	CHECKED BY APR	BRIDGE NO. 10565
DATE 06-05	DATE 06-05	DATE 08-05	SHEET NO. 89

FILE:x:\1436\bridge\STR_2BT_3SPR2.dgn

PUBLIC ROADS DIV.	STATE DIST. NO.	STATE PROJECT NO.	FEDERAL PROJECT NO.	FISCAL YEAR	COUNTY	SHEET NO.	TOTAL SHEETS
W.V.	6	U305-13 -0.02 00	BR-0013 (042)E	2006	BROOKE	83	163

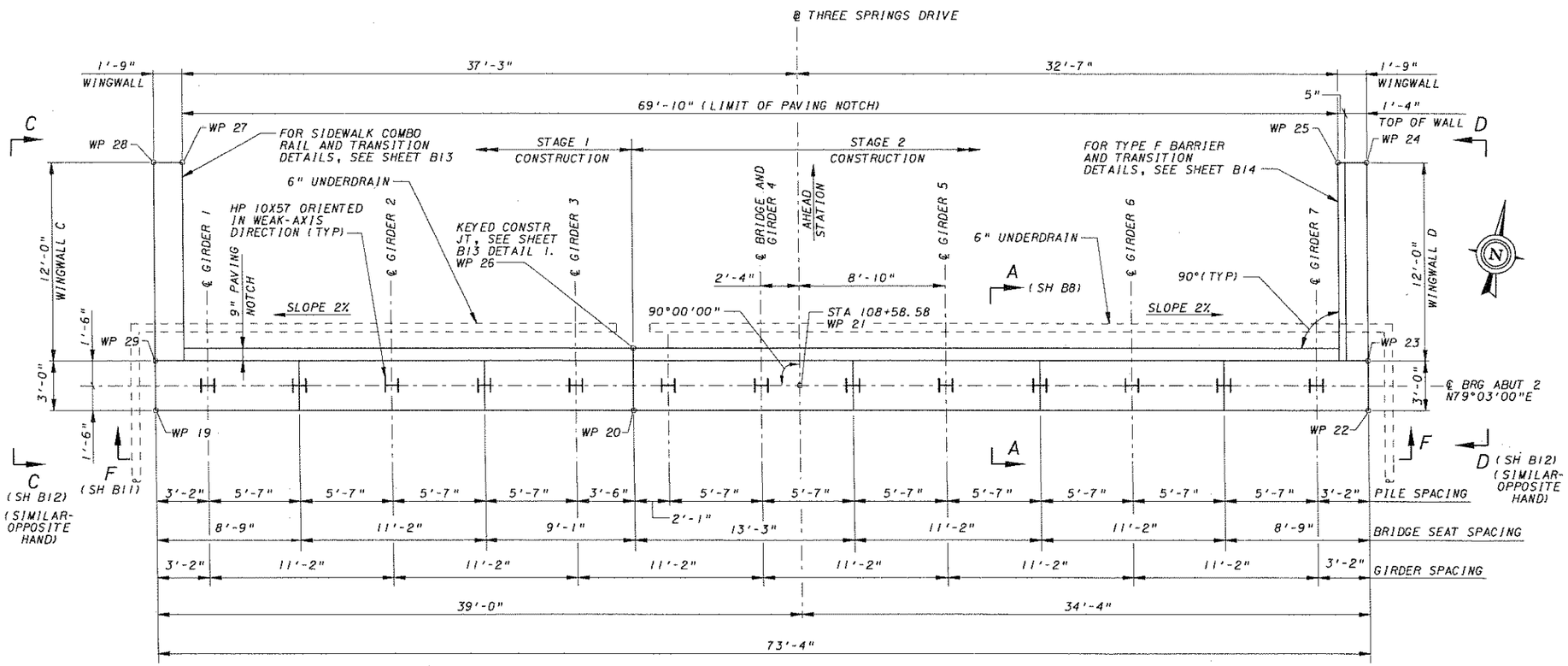

ABUTMENT 2 PLAN

4' 2' 0 4'

1/4" = 1'-0"

QUANTITIES - ABUTMENT 2

ITEM	DESCRIPTION	UNIT	QUANTITY
212001-000	STRUCTURE EXCAVATION	CY	42
212005-000	SELECT MATERIAL FOR BACKFILLING	CY	123
218004-001	8 INCH CRUSHED ROCK SLOPE PROTECTION	SY	371
601002-003	CLASS B CONCRETE, ARCHITECTURAL	CY	54
601009-001	CLASS H CONCRETE	CY	1
601009-003	CLASS H CONCRETE, ARCHITECTURAL	CY	45
602002-001	EPOXY COATED REINFORCING STEEL BAR.	LB	11,702
614001-004	HP10X57 STEEL PILE	LF	267
	SILANE PROTECTIVE COATING (FOR INFORMATION ONLY)	SF	611

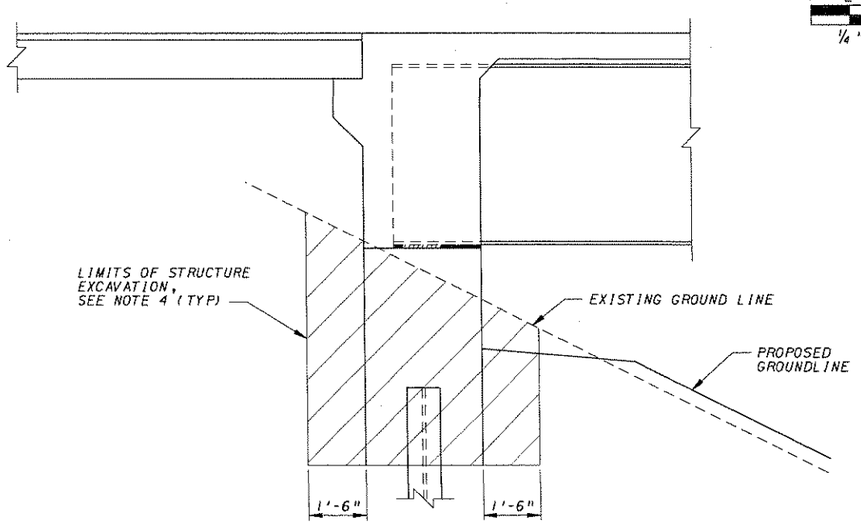

EXCAVATION PAY LIMITS

(ABUTMENTS SHOWN, WINGWALLS SIMILAR)

2' 1' 0 2'

1/2" = 1'-0"

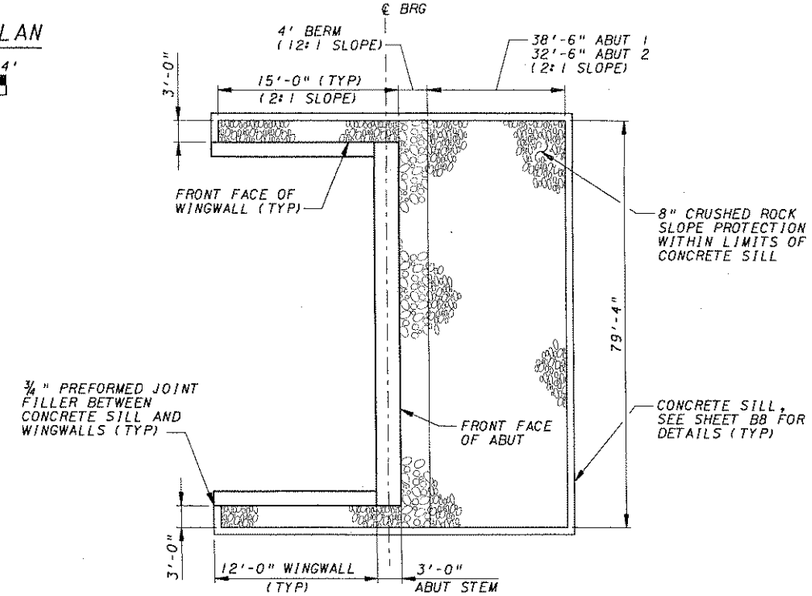

PLAN - LIMITS OF SLOPE PROTECTION

NO SCALE

NOTES:

1. WORK SH B10 THROUGH B14 TOGETHER.
2. FOR REINFORCEMENT BAR SCHEDULE, SEE SH B15.
3. DESIGN PILE LOAD AND RESISTANCE:
   MAXIMUM FACTORED PILE LOAD - 77 TONS
   FACTORED PILE RESISTANCE - 176 TONS
4. VOLUME OF EXISTING ABUTMENT WITHIN STRUCTURE EXCAVATION LIMITS IS NOT INCLUDED IN QUANTITY. EXISTING ABUTMENT REMOVAL IS INCLUDED IN ITEM 203001-000, "DISMANTLING STRUCTURE".
5. FOR LIMITS OF SELECT MATERIAL FOR BACKFILLING, SEE SH B8.
6. FOR ADDITIONAL NOTES, SEE SH B8.

REVISION NUMBER	SHEET NUMBER	REVISION	DATE	BY

THE WEST VIRGINIA DEPARTMENT OF TRANSPORTATION
DIVISION OF HIGHWAYS

THREE SPRINGS DRIVE BRIDGE REPLACEMENT

ABUTMENT 2

PLAN AND SECTION

HDR ENGINEERING, INC.
CONSULTING ENGINEERS
WEIRTON, WV (304) 748-8740

DESIGNED BY JWB	DRAWN BY BJS	CHECKED BY APR	BRIDGE NO. 10565
DATE 06-05	DATE 06-05	DATE 06-05	SHEET NO. B10

FILE:H:\1436\bridge\STR_BRT_3SPR3.dgn

PUBLIC ROADS DIV.	STATE DIST. NO.	STATE PROJECT NO.	FEDERAL PROJECT NO.	FISCAL YEAR	COUNTY	SHEET NO.	TOTAL SHEETS
W.V.	6	U305-13 -0.02 00	BR-0013 (042)E	2006	BROOKE	84	163

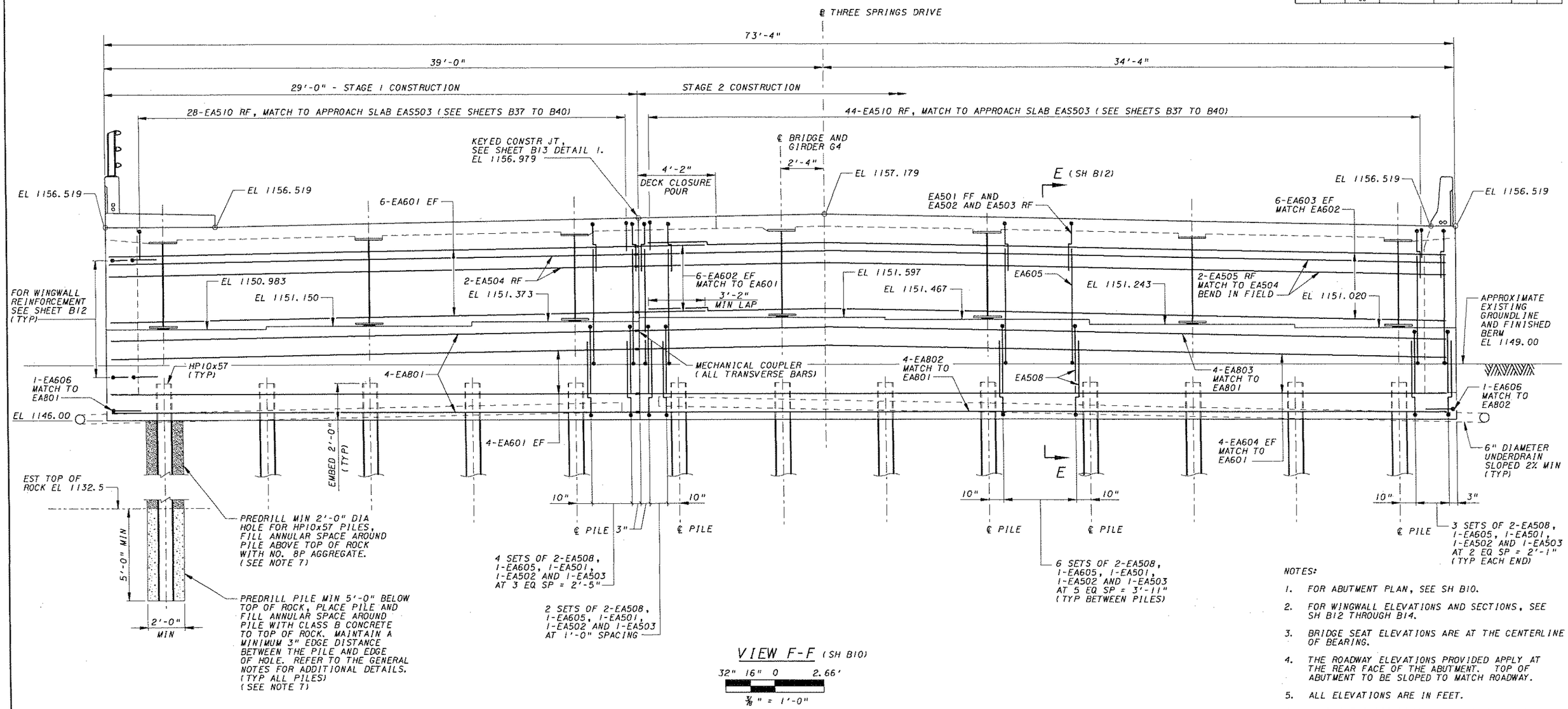

VIEW F-F (SH B10)

32" 16" 0 2.66'

3/8" = 1'-0"

NOTES:

1. FOR ABUTMENT PLAN, SEE SH B10.
2. FOR WINGWALL ELEVATIONS AND SECTIONS, SEE SH B12 THROUGH B14.
3. BRIDGE SEAT ELEVATIONS ARE AT THE CENTERLINE OF BEARING.
4. THE ROADWAY ELEVATIONS PROVIDED APPLY AT THE REAR FACE OF THE ABUTMENT. TOP OF ABUTMENT TO BE SLOPED TO MATCH ROADWAY.
5. ALL ELEVATIONS ARE IN FEET.
6. ABUTMENT 2 REINFORCEMENT IS SIMILAR TO ABUTMENT 1. SEE VIEW B-B ON SH B9.
7. THE COST OF CLASS B CONCRETE AND NO. 8P AGGREGATE AROUND PILES IS INCIDENTAL TO ITEM 614001-004 "HP10x57 STEEL PILE".
8. FOR ADDITIONAL NOTES, SEE SH B8.

REVISION NUMBER	SHEET NUMBER	REVISION	DATE	BY

THE WEST VIRGINIA DEPARTMENT OF TRANSPORTATION
DIVISION OF HIGHWAYS

THREE SPRINGS DRIVE BRIDGE REPLACEMENT

ABUTMENT 2

ELEVATION

HDR ENGINEERING, INC.
CONSULTING ENGINEERS
WEIRTON, WV (304) 748-8740

DESIGNED BY JWB	DRAWN BY BJS	CHECKED BY APR	BRIDGE NO. 10565
DATE 06-05	DATE 06-05	DATE 08-05	SHEET NO. B11

FILE(s) \1436\bridge\SFR_ABT_3SPRA.dgn

PUBLIC ROADS DIV.	STATE DIST. NO.	STATE PROJECT NO.	FEDERAL PROJECT NO.	FISCAL YEAR	COUNTY	SHEET NO.	TOTAL SHEETS
W.V.	6	U305-13 -0.02 00	BR-0013 (042)E	2006	BROOKE	85	163

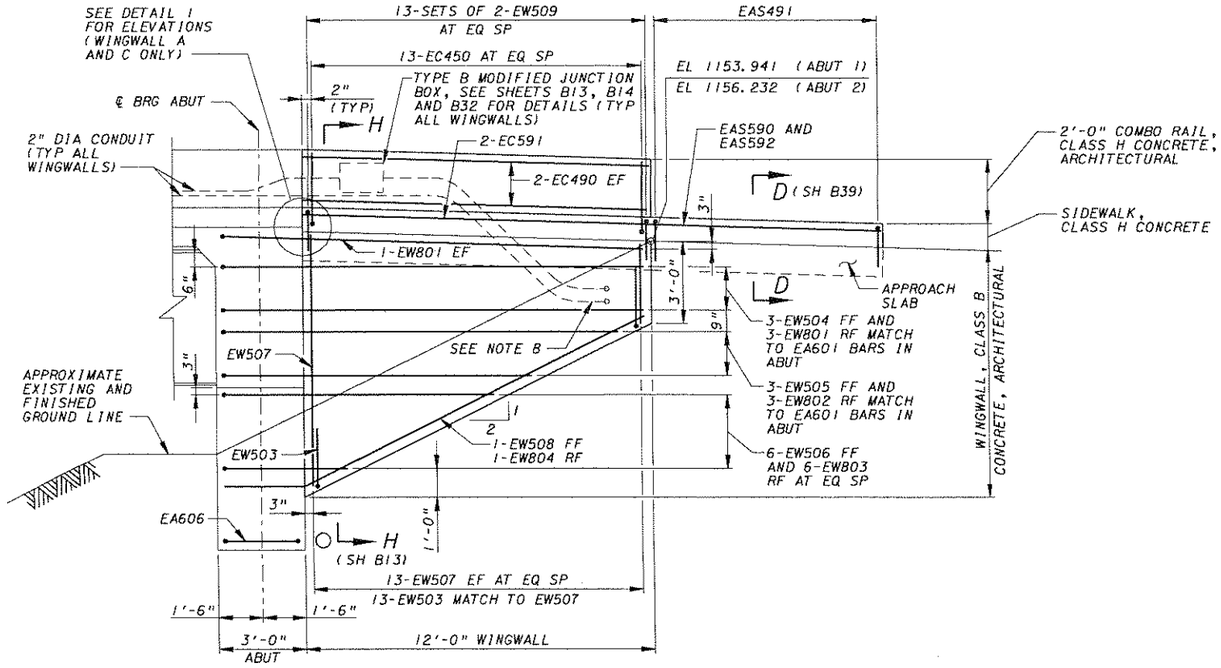

VIEW C-C (SH B8, B10)

(WINGWALL A SHOWN, WINGWALL C SIMILAR - OPPOSITE HAND)

32" 16" 0 2.66'

3/8" = 1'-0"

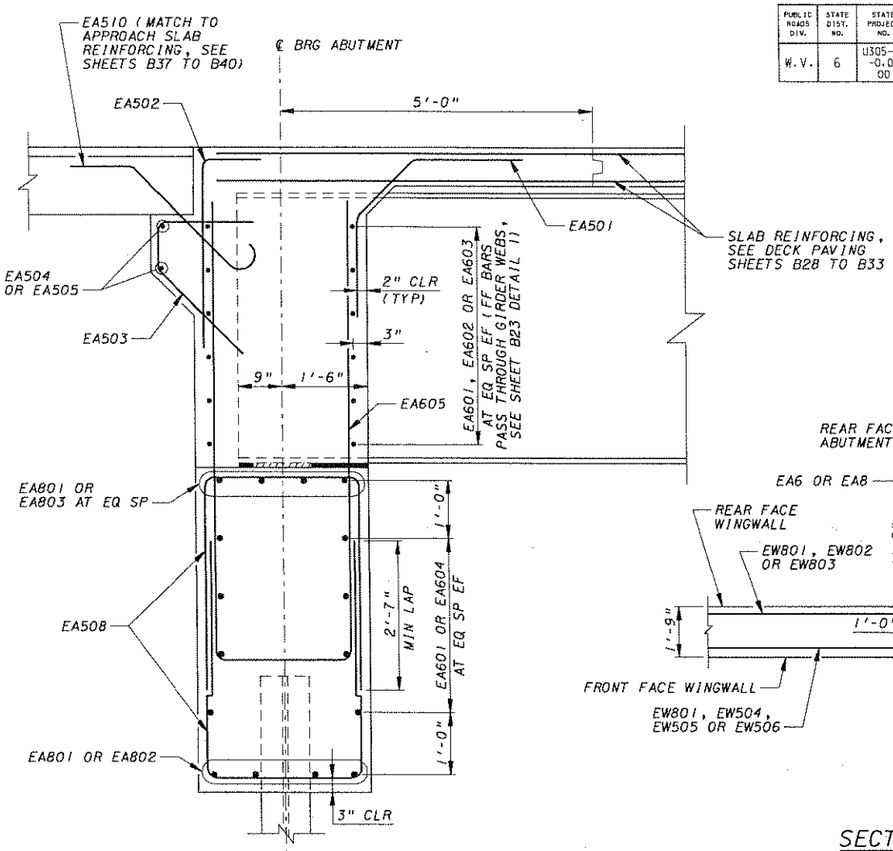

SECTION E-E (SH B9, B11)

16" 8" 0 1.33'

3/4" = 1'-0"

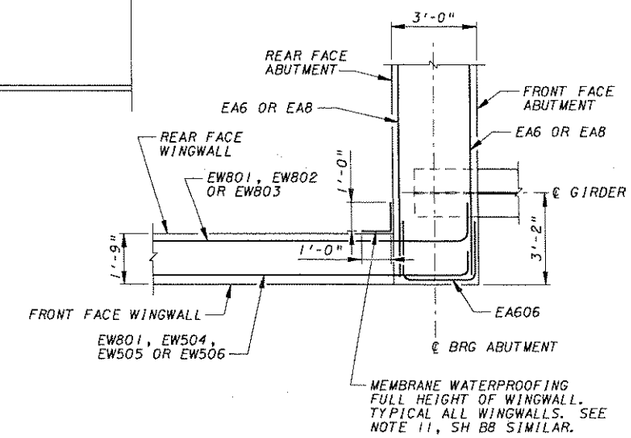

SECTION Z-Z

(WINGWALL B SHOWN, ALL OTHERS SIMILAR)

NO SCALE

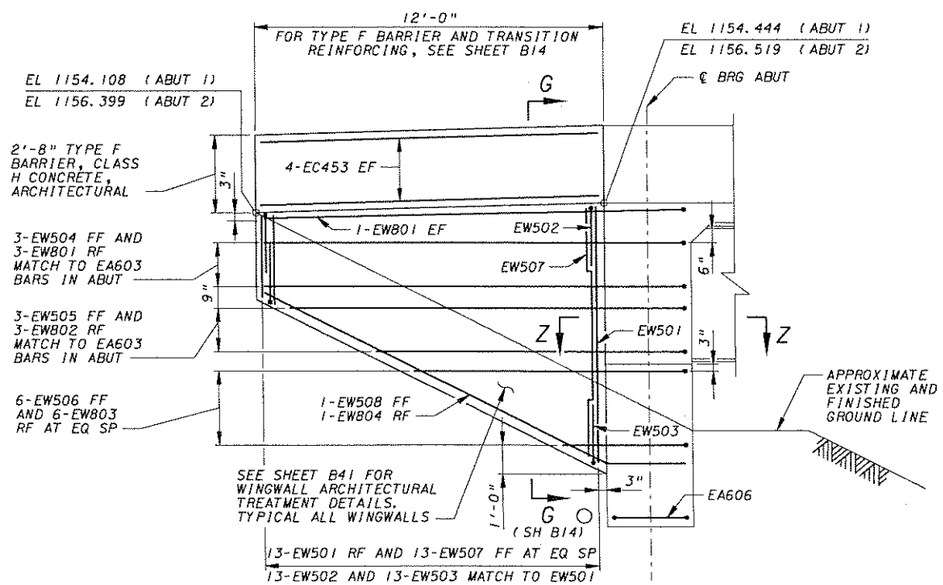

VIEW D-D (SH B8, B10)

(WINGWALL B SHOWN, WINGWALL D SIMILAR - OPPOSITE HAND)

(FOR TYPICAL DIMENSIONS AND CONDUIT DETAILS, SEE VIEW C-C)

32" 16" 0 2.66'

3/8" = 1'-0"

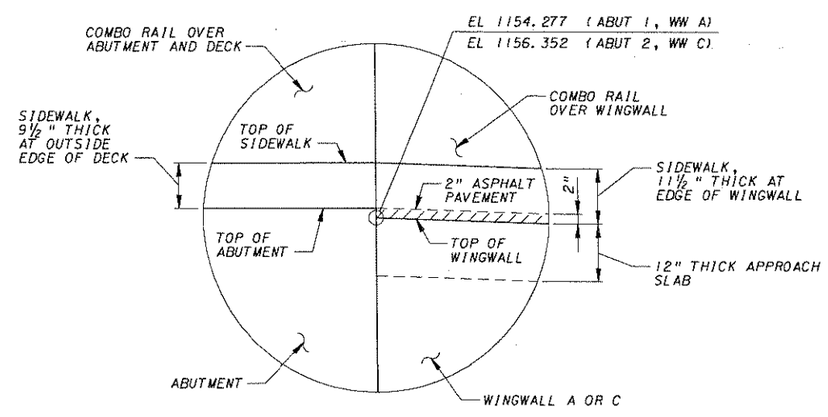

DETAIL 1

(TOP OF WINGWALL A AND C ELEVATIONS AT ABUTMENT)

NO SCALE

NOTES:

1. FOR ABUTMENT 1 AND 2 PLANS SEE SH B8 AND B10.
2. FOR ABUTMENT 1 AND 2 ELEVATIONS SEE SH B9 AND B11.
3. WINGWALLS ELEVATIONS ARE PROVIDED AT THE EXTERIOR FACE OF WALL.
4. FF INDICATES FRONT FACE
   RF INDICATES REAR FACE
   EF INDICATES EACH FACE
5. FOR APPROACH SLAB DETAILS, SEE SH B37 TO B40.
6. FOR COMBO RAIL AND TRANSITION DETAILS, SEE SH B13.
7. FOR TYPE F BARRIER AND TRANSITION DETAILS, SEE SH B14.
8. CONDUIT TO EXIT EXTERIOR FACE OF WINGWALL BELOW GRADE (TYPICAL).
9. FOR ADDITIONAL NOTES, SEE SH B8.

REVISION NUMBER	SHEET NUMBER	REVISION	DATE	BY

THE WEST VIRGINIA DEPARTMENT OF TRANSPORTATION
DIVISION OF HIGHWAYS

THREE SPRINGS DRIVE BRIDGE REPLACEMENT

ABUTMENT SECTION AND WINGWALL ELEVATIONS

HDR ENGINEERING, INC.
CONSULTING ENGINEERS
WEIRTON, WV (304) 748-8740

DESIGNED BY JWB	DRAWN BY BJS	CHECKED BY APR	BRIDGE NO. 10565
DATE 06-05	DATE 06-05	DATE 06-05	SHEET NO. B12

FILEext\1436\bridges\STR_ABT_3SPRS.dgn

PUBLIC ROADS DIV.	STATE DIST. NO.	STATE PROJECT NO.	FEDERAL PROJECT NO.	FISCAL YEAR	COUNTY	SHEET NO.	TOTAL SHEETS
W.V.	6	U305-13 -0.02 00	BR-0013 (042)E	2006	BROOKE	86	163

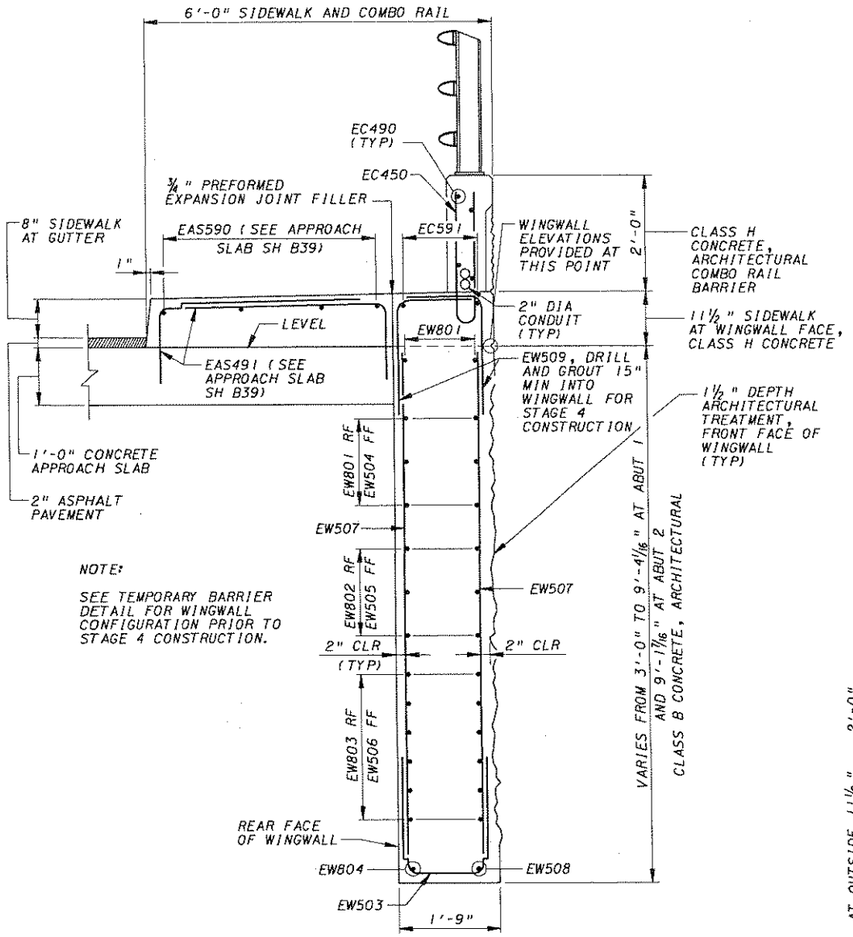

NOTE:

SEE TEMPORARY BARRIER DETAIL FOR WINGWALL CONFIGURATION PRIOR TO STAGE 4 CONSTRUCTION.

SECTION H-H (SH B12)

16" 8" 0 1.33'

¾" = 1'-0"

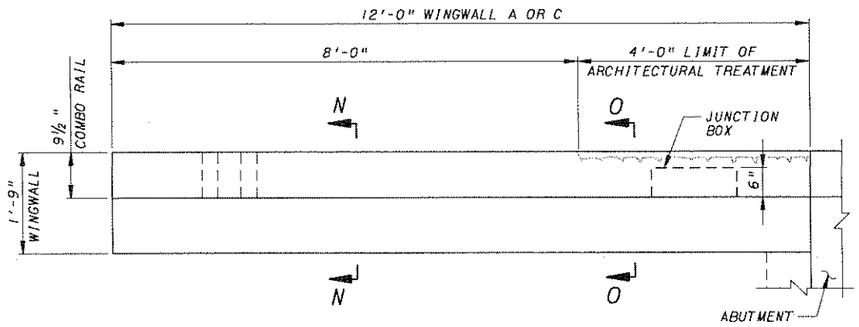

PLAN COMBO RAIL TRANSITION

(FOR COMBO RAIL REINFORCING, SEE SHEET B12 VIEW C-C)

NO SCALE

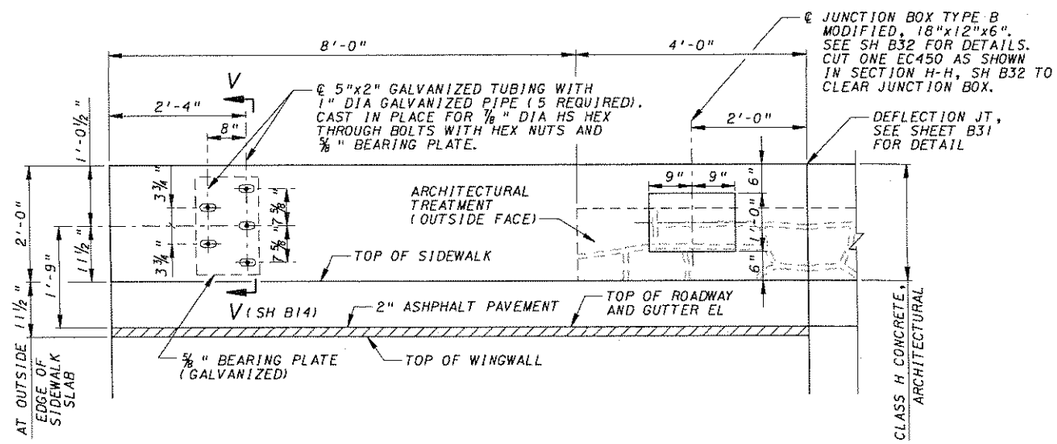

ELEVATION COMBO RAIL TRANSITION

(ALUMINUM RAILING NOT SHOWN)

NO SCALE

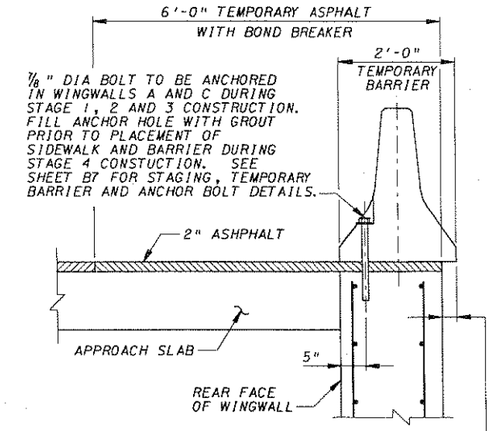

TEMPORARY BARRIER DETAIL

NO SCALE

NOTES:

1. ALUMINUM RAILING NOT SHOWN. FOR DETAILS SEE SH B36.
2. FOR ARCHITECTURAL TREATMENT DETAILS, SEE SH B41.
3. FOR NORMAL COMBO RAIL DETAILS AND DIMENSIONS NOT SHOWN, SEE DECK DETAILS SH B32, SIMILAR.
4. FOR CONSTRUCTION STAGING DETAILS, SEE SH B7.
5. COVER OVER REINFORCING IS FROM INSIDE FACE OF ARCHITECTURAL TREATMENT.
6. FF INDICATES FRONT FACE
   RF INDICATES REAR FACE
   EF INDICATES EACH FACE
7. FOR ABUTMENT DETAILS SEE SH B8 AND B9 FOR ABUT 1 AND B10 AND B11 FOR ABUT 2.
8. REFER TO SH B32 FOR ADDITIONAL JUNCTION BOX DETAILS. FOR ELECTRICAL DETAILS AND NOTES, SEE THE LIGHTING PLANS.
9. FOR ADDITIONAL NOTES, SEE SH B8.

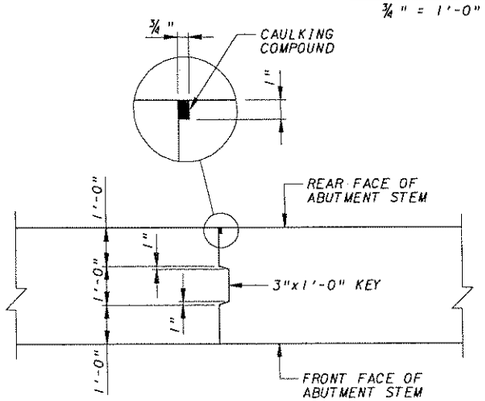

DETAIL 1 - SECTION THROUGH KEYED CONSTRUCTION JOINT

NO SCALE

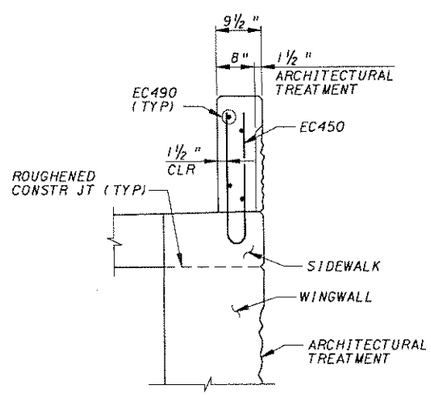

SECTION O-O

(ALUMINUM RAIL NOT SHOWN)

NO SCALE

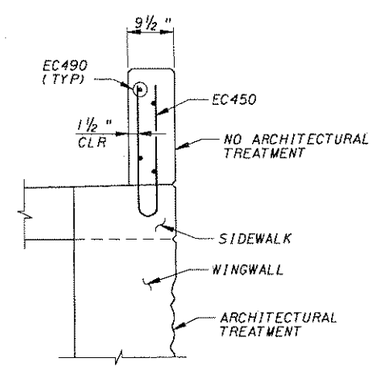

SECTION N-N

(ALUMINUM RAIL NOT SHOWN)

NO SCALE

REVISION NUMBER	SHEET NUMBER	REVISION	DATE	BY

THE WEST VIRGINIA DEPARTMENT OF TRANSPORTATION
DIVISION OF HIGHWAYS

THREE SPRINGS DRIVE BRIDGE REPLACEMENT

ABUTMENT DETAILS

HDR ENGINEERING, INC.
CONSULTING ENGINEERS
WEIRTON, WV (304) 748-8740

DESIGNED BY JWB	DRAWN BY BJS	CHECKED BY APR	BRIDGE NO. 10565
DATE 06-05	DATE 06-05	DATE 08-05	SHEET NO. B13

FILENAME: \436\bridge\STRcwBF_35P96.dgn

PUBLIC ROADS DIV.	STATE DIST. NO.	STATE PROJECT NO.	FEDERAL PROJECT NO.	FISCAL YEAR	COUNTY	SHEET NO.	TOTAL SHEETS
W.V.	6	U305-13 -0.02 00	BR-0013 (042)E	2006	BROOKE	87	163

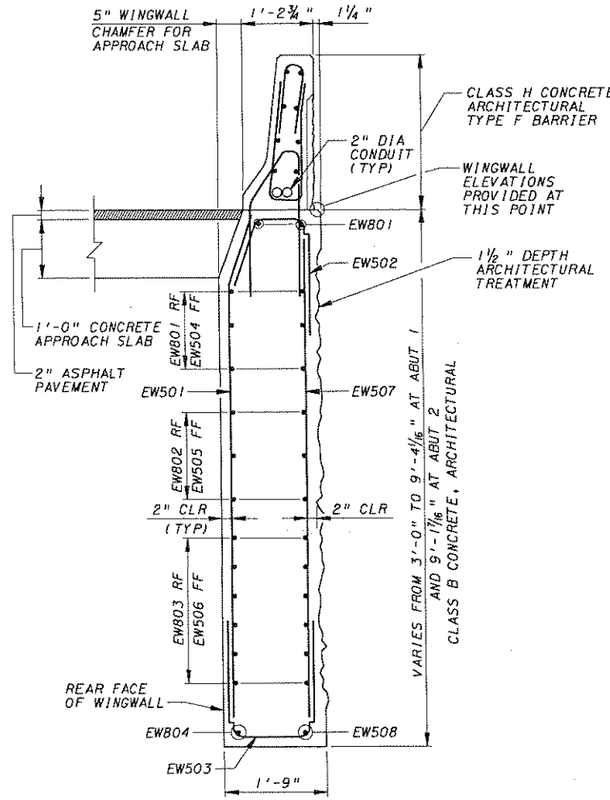

SECTION G-G (SH B12)

16" 8" 0 1.33'

¾" = 1'-0"

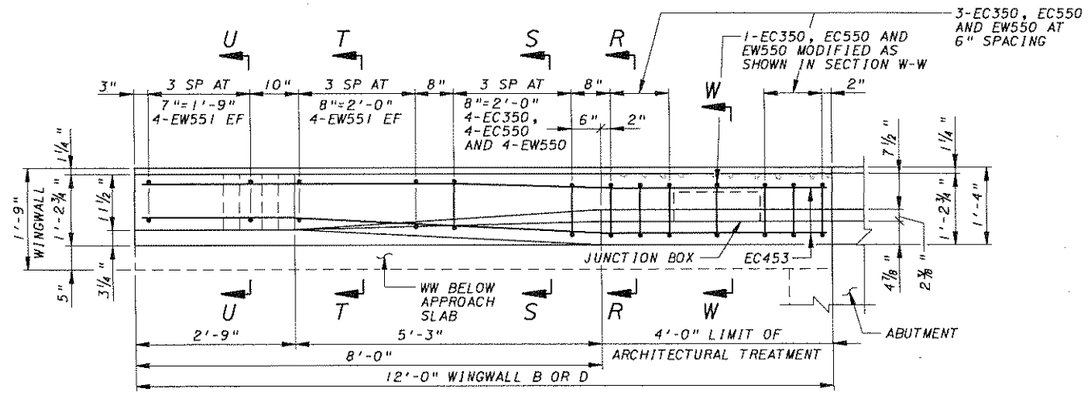

PLAN TYPE F BARRIER TRANSITION

NO SCALE

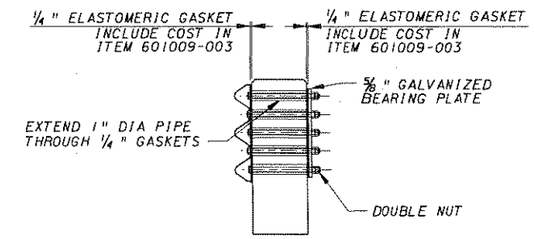

SECTION V-V (SH B13, B14)

NO SCALE

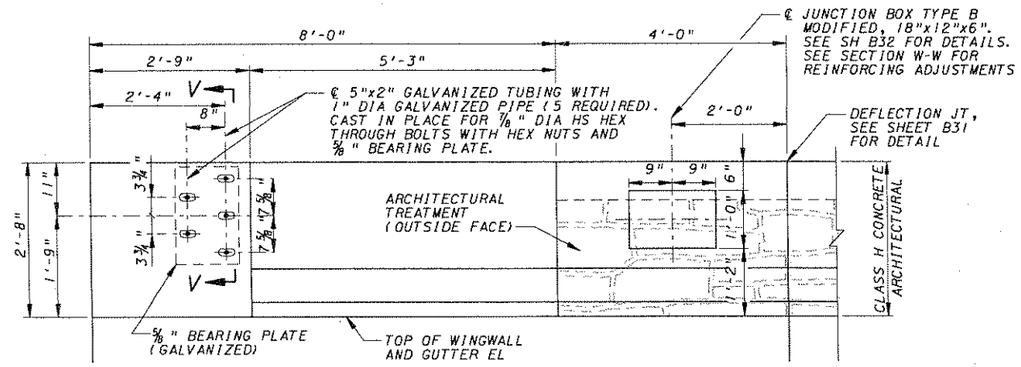

ELEVATION TYPE F BARRIER TRANSITION

NO SCALE

GUARDRAIL CONNECTION NOTES:

1. CONNECT THE THRIE BEAM TERMINAL PLATE AND ⅝" BEARING PLATE WITH ⅞" DIA BOLTS AND TWO NUTS. TIGHTEN FIRST NUT AGAINST BEARING PLATE AND SECOND NUT AGAINST FIRST NUT TO PREVENT NUTS FROM LOOSENING. CENTER THE BOLTS IN THE 5"x2" TUBING
2. ALL GALVANIZING SHALL BE IN ACCORDANCE WITH AASHTO M111.

NOTES:

1. PROVIDE CLASS 2 FINISH FOR EXPOSED SURFACE PER SECTION 601.11.
2. FOR ARCHITECTURAL TREATMENT DETAILS SEE SH B41.
3. FOR NORMAL TYPE F BARRIER DETAILS AND DIMENSIONS NOT SHOWN, SEE DECK DETAILS SH B31, SIMILAR.
4. COVER OVER REINFORCING IS FROM INSIDE FACE OF ARCHITECTURAL TREATMENT.
5. FF INDICATES FRONT FACE
   RF INDICATES REAR FACE
   EF INDICATES EACH FACE
6. FOR ABUTMENT DETAILS SEE SH B8 AND B9 FOR ABUT 1 AND B10 AND B11 FOR ABUT 2.
7. REFER TO SH B32 FOR ADDITIONAL JUNCTION BOX DETAILS. FOR ELECTRICAL DETAILS AND NOTES, SEE THE LIGHTING PLANS.
8. FOR ADDITIONAL NOTES, SEE SH B8.

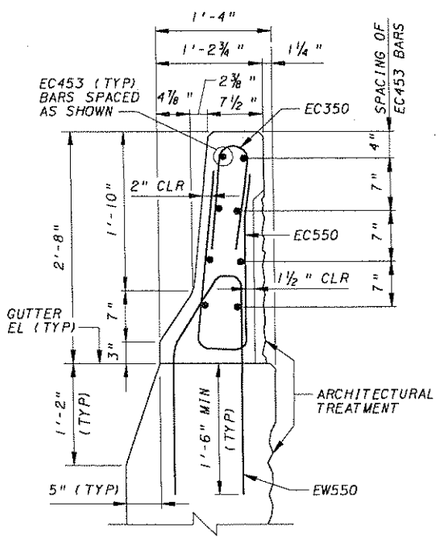

SECTION R-R

NO SCALE

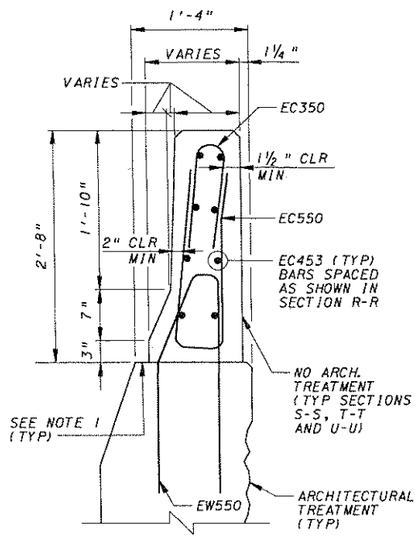

SECTION S-S

NO SCALE

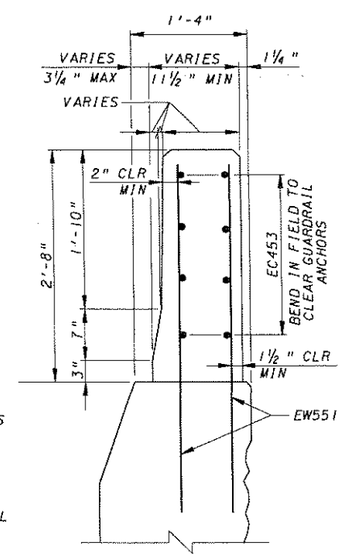

SECTION T-T

NO SCALE

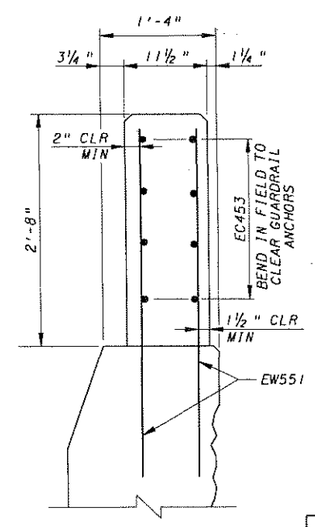

SECTION U-U

NO SCALE

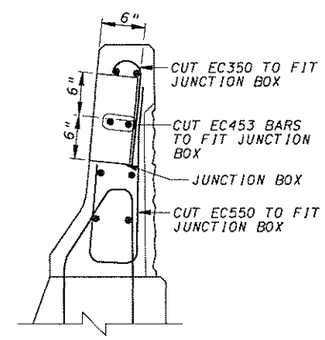

SECTION W-W

NO SCALE

REVISION NUMBER	SHEET NUMBER	REVISION	DATE	BY

THE WEST VIRGINIA DEPARTMENT OF TRANSPORTATION
DIVISION OF HIGHWAYS

THREE SPRINGS DRIVE BRIDGE REPLACEMENT

ABUTMENT DETAILS

HDR ENGINEERING, INC.
CONSULTING ENGINEERS
WEIRTON, WV (304) 748-8740

DESIGNED BY JWB	DRAWN BY BJS	CHECKED BY APR	BRIDGE NO. 10565
DATE 06-05	DATE 06-05	DATE 08-05	SHEET NO. B14

FILE(x)\4361\dr\dgn\STR_ABT_3SPR7.dgn

PUBLIC ROADS DIV.	STATE DIST. NO.	STATE PROJECT NO.	FEDERAL PROJECT NO.	FISCAL YEAR	COUNTY	SHEET NO.	TOTAL SHEETS
W.V.	6	U305-13 -0.02 00	BR-0013 (042)E	2006	BROOKE	88	163

REINFORCEMENT BAR SCHEDULE

ABUTMENT 1

MARK	SIZE	LENGTH	NO.	TYPE	A	B	C	D	E	F	G	H	J	K	R	REMARKS
EA501	5	6'-2¾"	78	29	2'-7"	1'-0¾"	2'-7"					1'-10"		1'-10"		
EA502	5	4'-4"	78	10	1'-6"	2'-10"										
EA503	5	5'-1"	78	7	2'-1"	8"	2'-4"							1'-7¾"		
EA504	5	28'-10"	2	STR												(1)
EA505	5	44'-2"	2	STR												(2), (3), MATCH EA504
EA508	5	10'-8"	156	12	4'-0"	2'-8"	4'-0"									
EA510	5	5'-1"	72	64	1'-6"	3'-0"					7"	2'-1½"				
EA601	6	28'-10"	20	STR												(1)
EA602	6	3'-8"	12	STR												(2), MATCH EA601
EA603	6	43'-8"	12	2	34'-2"	9'-6"						4⅝"				
EA604	6	44'-2"	8	2	10'-0"	34'-2"						0" TO 4⅞"				(2), MATCH EA601 2 SETS OF 4 VARY H BY 1⅝"
EA605	6	17'-10"	78	12	7'-7"	2'-8"	7'-7"									
EA606	6	9'-6"	2	12	3'-5"	2'-8"	3'-5"									
EA801	8	28'-10"	8	STR												(1)
EA802	8	44'-2"	4	STR												(2), MATCH EA801
EA803	8	44'-2"	4	2	10'-0"	34'-2"						4⅞"				(2), MATCH EA801
EW501	5	2'-9" TO 8'-9"	13	2	1'-1"	1'-8" TO 7'-8"						4⅜"				VARY B BY 6"
EW502	5	4'-0½"	13	7	2'-1"	10½"	1'-1"							4⅜"		
EW503	5	4'-7½"	26	12	1'-8"	1'-3½"	1'-8"									
EW504	5	15'-5"	6	10	14'-7"	10"										
EW505	5	11'-7" TO 14'-7"	6	10	10'-9" TO 13'-9"	10"										2 SETS OF 3 VARY A BY 1'-6"
EW506	5	5'-2" TO 10'-2"	12	10	4'-4" TO 9'-4"	10"										2 SETS OF 6 VARY A BY 1'-0"
EW507	5	2'-8" TO 8'-8"	39	STR												3 SETS OF 13 VARY BY 6"
EW508	5	16'-1"	2	2	13'-3"	2'-10"						5'-11"				
EW509	5	3'-3"	26	10	1'-3"	2'-0"										13 SETS OF 2
EW550	5	5'-4¼"	11	60												SEE FIGURE
EW551	5	4'-0"	16	STR												
EW801	8	15'-11"	10	10	14'-7"	1'-4"										
EW802	8	12'-1" TO 15'-1"	6	10	10'-9" TO 13'-9"	1'-4"										2 SETS OF 3 VARY A BY 1'-6"
EW803	8	5'-8" TO 10'-8"	12	10	4'-4" TO 9'-4"	1'-4"										2 SETS OF 6 VARY A BY 1'-0"
EW804	8	16'-1"	2	2	13'-3"	2'-10"						5'-11"				
EC350	3	2'-9¾"	11	21	1'-2"	5¾"	1'-2"								1⅝"	
EC450	4	5'-1⅛"	13	21	2'-3"	7⅛"	2'-3"								2"	
EC453	4	11'-8"	8	STR												(3)
EC490	4	11'-8"	4	STR												
EC550	5	4'-6⅝"	11	37												SEE FIGURE
EC591	5	11'-8"	2	STR												

ABUTMENT 2

MARK	SIZE	LENGTH	NO.	TYPE	A	B	C	D	E	F	G	H	J	K	R	REMARKS
EA501	5	6'-2¾"	78	29	2'-7"	1'-0¾"	2'-7"					1'-10"		1'-10"		
EA502	5	4'-4"	78	10	1'-6"	2'-10"										
EA503	5	5'-1"	78	7	2'-1"	8"	2'-4"							1'-7¾"		
EA504	5	28'-10"	2	STR												(1)
EA505	5	44'-2"	2	STR												(2), (3), MATCH EA504
EA508	5	10'-8"	156	12	4'-0"	2'-8"	4'-0"									
EA510	5	5'-1"	72	64	1'-6"	3'-0"					7"	2'-1½"				
EA601	6	28'-10"	20	STR												(1)
EA602	6	3'-8"	12	STR												(2), MATCH EA601
EA603	6	43'-8"	12	2	34'-2"	9'-6"						4⅝"				
EA604	6	44'-2"	8	2	10'-0"	34'-2"						0" TO 4⅞"				(2), MATCH EA601 2 SETS OF 4 VARY H BY 1⅝"
EA605	6	17'-10"	78	12	7'-7"	2'-8"	7'-7"									
EA606	6	9'-6"	2	12	3'-5"	2'-8"	3'-5"									
EA801	8	28'-10"	8	STR												(1)
EA802	8	44'-2"	4	STR												(2), MATCH EA801
EA803	8	44'-2"	4	2	10'-0"	34'-2"						4⅞"				(2), MATCH EA801
EW501	5	2'-9" TO 8'-9"	13	2	1'-1"	1'-8" TO 7'-8"						4⅜"				VARY B BY 6"
EW502	5	4'-0½"	13	7	2'-1"	10½"	1'-1"							4⅜"		
EW503	5	4'-7½"	26	12	1'-8"	1'-3½"	1'-8"									
EW504	5	15'-5"	6	10	14'-7"	10"										
EW505	5	11'-7" TO 14'-7"	6	10	10'-9" TO 13'-9"	10"										2 SETS OF 3 VARY A BY 1'-6"
EW506	5	5'-2" TO 10'-2"	12	10	4'-4" TO 9'-4"	10"										2 SETS OF 6 VARY A BY 1'-0"
EW507	5	2'-8" TO 8'-8"	39	STR												3 SETS OF 13 VARY BY 6"
EW508	5	16'-1"	2	2	13'-3"	2'-10"						5'-11"				
EW509	5	3'-3"	26	10	1'-3"	2'-0"										13 SETS OF 2
EW550	5	5'-4¼"	11	60												SEE FIGURE
EW551	5	4'-0"	16	STR												
EW801	8	15'-11"	10	10	14'-7"	1'-4"										
EW802	8	12'-1" TO 15'-1"	6	10	10'-9" TO 13'-9"	1'-4"										2 SETS OF 3 VARY A BY 1'-6"
EW803	8	5'-8" TO 10'-8"	12	10	4'-4" TO 9'-4"	1'-4"										2 SETS OF 6 VARY A BY 1'-0"
EW804	8	16'-1"	2	2	13'-3"	2'-10"						5'-11"				
EC350	3	2'-9¾"	11	21	1'-2"	5¾"	1'-2"								1⅝"	
EC450	4	5'-1⅛"	13	21	2'-3"	7⅛"	2'-3"								2"	
EC453	4	11'-8"	8	STR												(3)
EC490	4	11'-8"	4	STR												
EC550	5	4'-6⅝"	11	37												SEE FIGURE
EC591	5	11'-8"	2	STR												

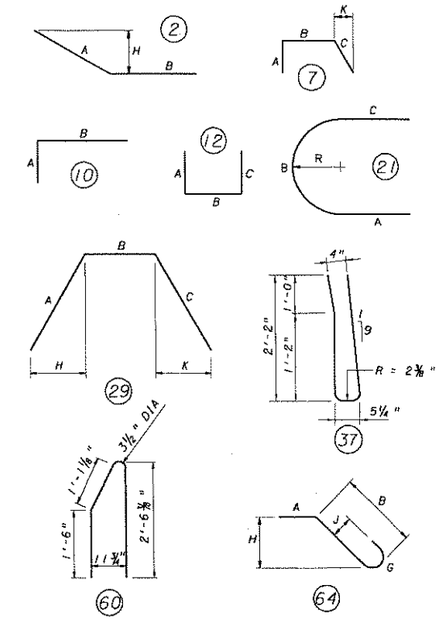

REINFORCING BAR NOTES:

1. "J" DIMENSIONS ON 180° HOOKS TO BE SHOWN ONLY WHERE NECESSARY TO RESTRICT HOOK SIZE OTHERWISE STANDARD HOOKS ARE TO BE USED.
2. ALL DIMENSIONS ARE OUT TO OUT OF BAR EXCEPT "A" AND "G" ON STANDARD 135° AND 180° HOOKS, AND "R" WHICH IS SHOWN TO THE INSIDE OF THE BAR.
3. FIGURES IN CIRCLES SHOW TYPES.
4. "E" IN BAR MARK INDICATES EPOXY COATED.
5. DO NOT USE RAIL STEEL (A616) IN BRIDGE ABUTMENTS, FOOTINGS AND WHERE BENDING OF REINFORCEMENT BARS IS INDICATED.
6. REINFORCING BAR SCHEDULE IS FOR INFORMATION ONLY. VERIFY SCHEDULE PRIOR TO BIDDING AND FABRICATION.
7. NO CORRECTION IN LENGTH FOR BEND CURVATURE IS TO BE MADE.
8. BAR LENGTHS DO NOT ACCOUNT FOR REQUIRED CORRECTION FOR MECHANICAL COUPLERS.

NOTES:

1. FOR GENERAL NOTES, SEE SH B5 AND B6.
2. THE COST OF MECHANICAL COUPLERS IS INCIDENTAL TO ITEMS 602001-001 "REINFORCING STEEL BAR" AND 602002-001 "EPOXY COATED REINFORCING STEEL BAR".
3. MECHANICAL COUPLERS SHALL DEVELOP AT LEAST 125% OF THE SPECIFIED YIELD STRENGTH OF THE REINFORCING BAR.

REMARK KEY:

(1) ONE END INCLUDES MECHANICAL COUPLER
(2) PREPARE ONE END FOR MECHANICAL COUPLER
(3) BEND IN FIELD

REVISION NUMBER	SHEET NUMBER	REVISION	DATE	BY

THE WEST VIRGINIA DEPARTMENT OF TRANSPORTATION
DIVISION OF HIGHWAYS

THREE SPRINGS DRIVE BRIDGE REPLACEMENT

ABUTMENT

REINFORCEMENT BAR SCHEDULE

HDR ENGINEERING, INC.
CONSULTING ENGINEERS
WEIRTON, WV (304) 748-8740

DESIGNED BY APR	DRAWN BY BJS	CHECKED BY JWB	BRIDGE NO. 10565
DATE 06-05	DATE 07-05	DATE 08-05	SHEET NO. B15

FILE(x:)\1436\bridge\STR_BAR_3SPRI.dgn

PUBLIC ROADS DIV.	STATE DIST. NO.	STATE PROJECT NO.	FEDERAL PROJECT NO.	FISCAL YEAR	COUNTY	SHEET NO.	TOTAL SHEETS
W.V.	6	U305-13 -0.02 00	BR-0013 (042 1E	2006	BROOKE	89	163

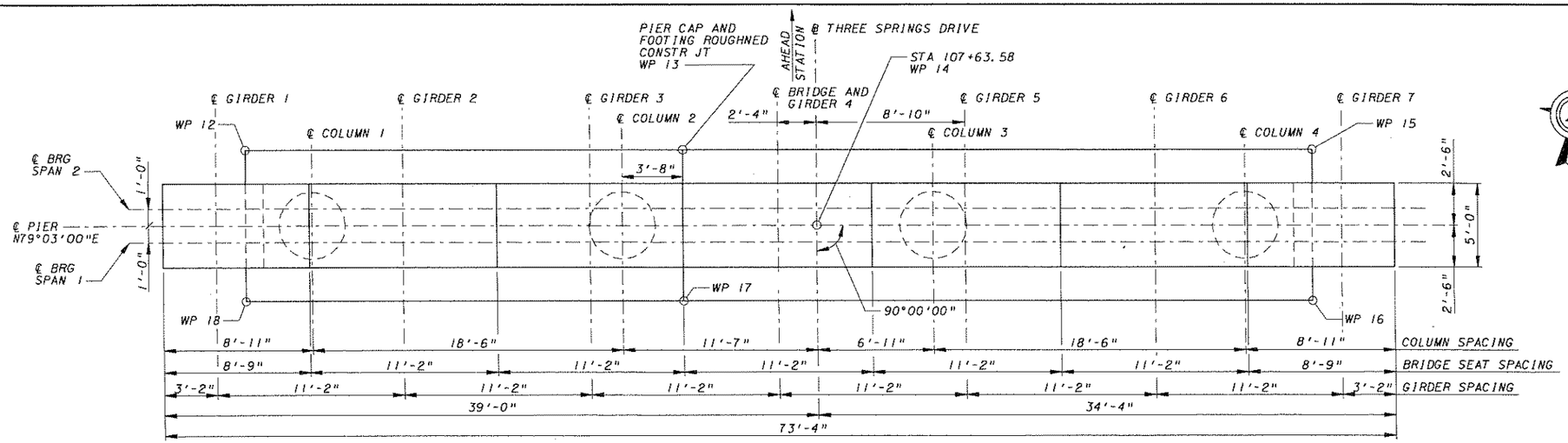

PLAN

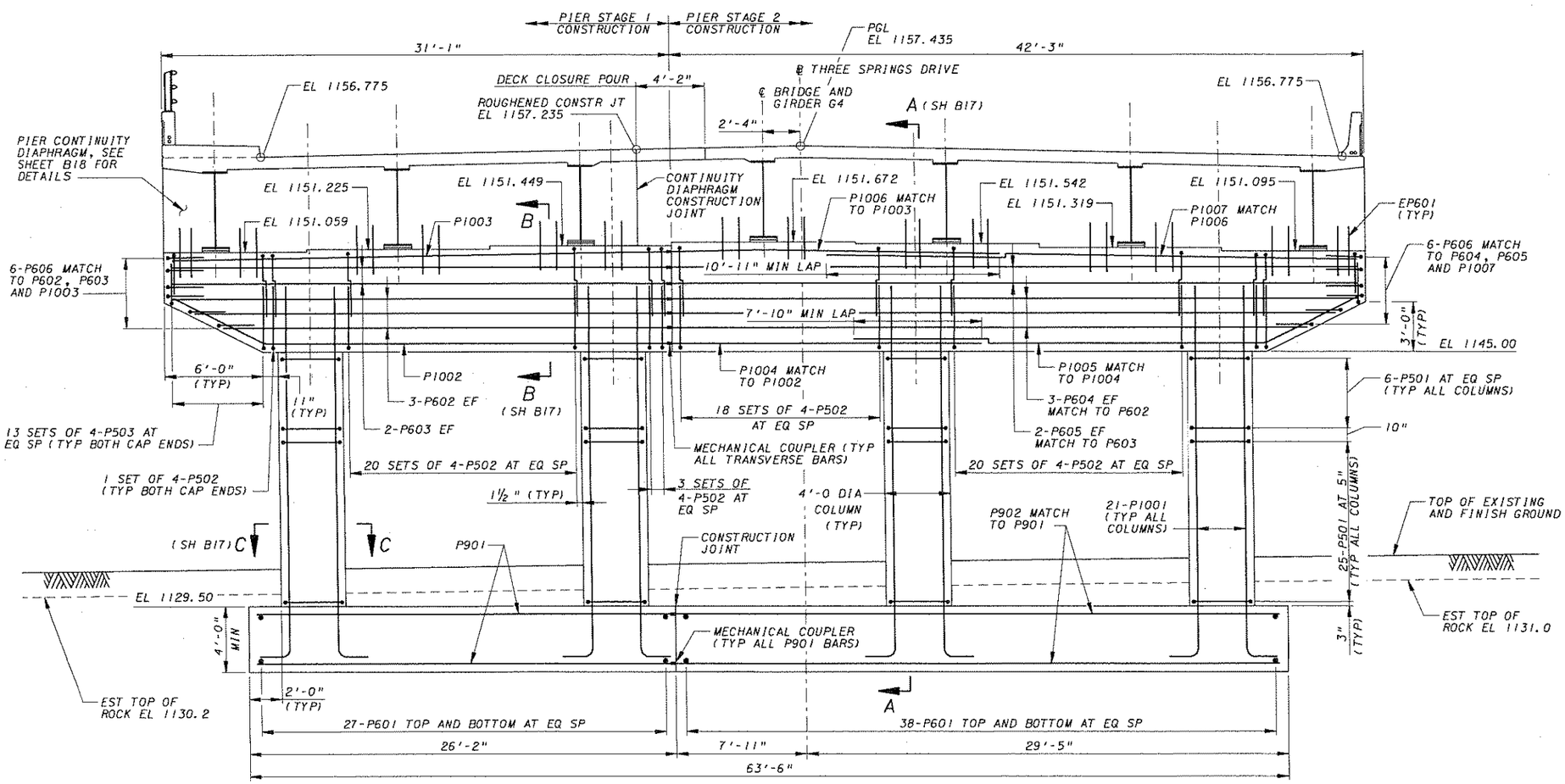

ELEVATION

(LOOKING AHEAD ON STATION)

4' 2' 0 4'

¼" = 1'-0"

QUANTITIES - PIER

ITEM	DESCRIPTION	UNIT	QUANTITY
212001-000	STRUCTURE EXCAVATION	CY	44
212003-000	ROCK EXCAVATION	CY	94
601002-001	CLASS B CONCRETE	CY	196
601009-001	CLASS H CONCRETE	CY	69
602001-001	REINFORCING STEEL BAR	LB	33,824
602002-001	EPOXY COATED REINFORCING STEEL BAR	LB	2,956
	SILANE PROTECTIVE COATING (FOR INFORMATION ONLY)	SF	2,751

NOTES:

1. FOR GENERAL NOTES, SEE SH B5 AND B6.
2. WORK SH B16 THROUGH B19 TOGETHER.
3. FOR REINFORCEMENT BAR SCHEDULE, SEE SH B19.
4. ALL REINFORCING SPACING SHOWN ARE MAXIMUMS.
5. FOR BEARING DETAILS, SEE SH B27.
6. FOR STAKE-OUT PLAN, SEE SH B3.
7. MAXIMUM DESIGN BEARING PRESSURES:
   MAXIMUM BEARING PRESSURE - 5.6 TSF
   ULTIMATE BEARING CAPACITY - 30 TSF
8. FOR DECK PAVING PLAN, SEE SH B28.
9. FOR EXCAVATION PAY LIMITS, SEE SH B17.
10. ALL ELEVATIONS ARE IN FEET.
11. FF INDICATES FRONT FACE
    RF INDICATES REAR FACE
    EF INDICATES EACH FACE
12. ALL ELEVATIONS ARE PROVIDED AT THE CENTERLINE OF PIER.

THE WEST VIRGINIA DEPARTMENT OF TRANSPORTATION
DIVISION OF HIGHWAYS

THREE SPRINGS DRIVE BRIDGE REPLACEMENT

PIER

PLAN AND ELEVATION

HDR ENGINEERING, INC.
CONSULTING ENGINEERS
WEIRTON, WV (304) 748-8740

REVISION NUMBER	SHEET NUMBER	REVISION	DATE	BY

DESIGNED BY APR	DRAWN BY APR	CHECKED BY JWB	BRIDGE NO. 10565
DATE 06-05	DATE 06-05	DATE 08-05	SHEET NO. B16

FILE:xl\14361\bridge\STR_PTR_3SPRI.dgn

PUBLIC ROADS DIV.	STATE DIST. NO.	STATE PROJECT NO.	FEDERAL PROJECT NO.	FISCAL YEAR	COUNTY	SHEET NO.	TOTAL SHEETS
W.V.	6	U305-13 -0.02 00	BR-0013 (042)E	2006	BROOKE	90	163

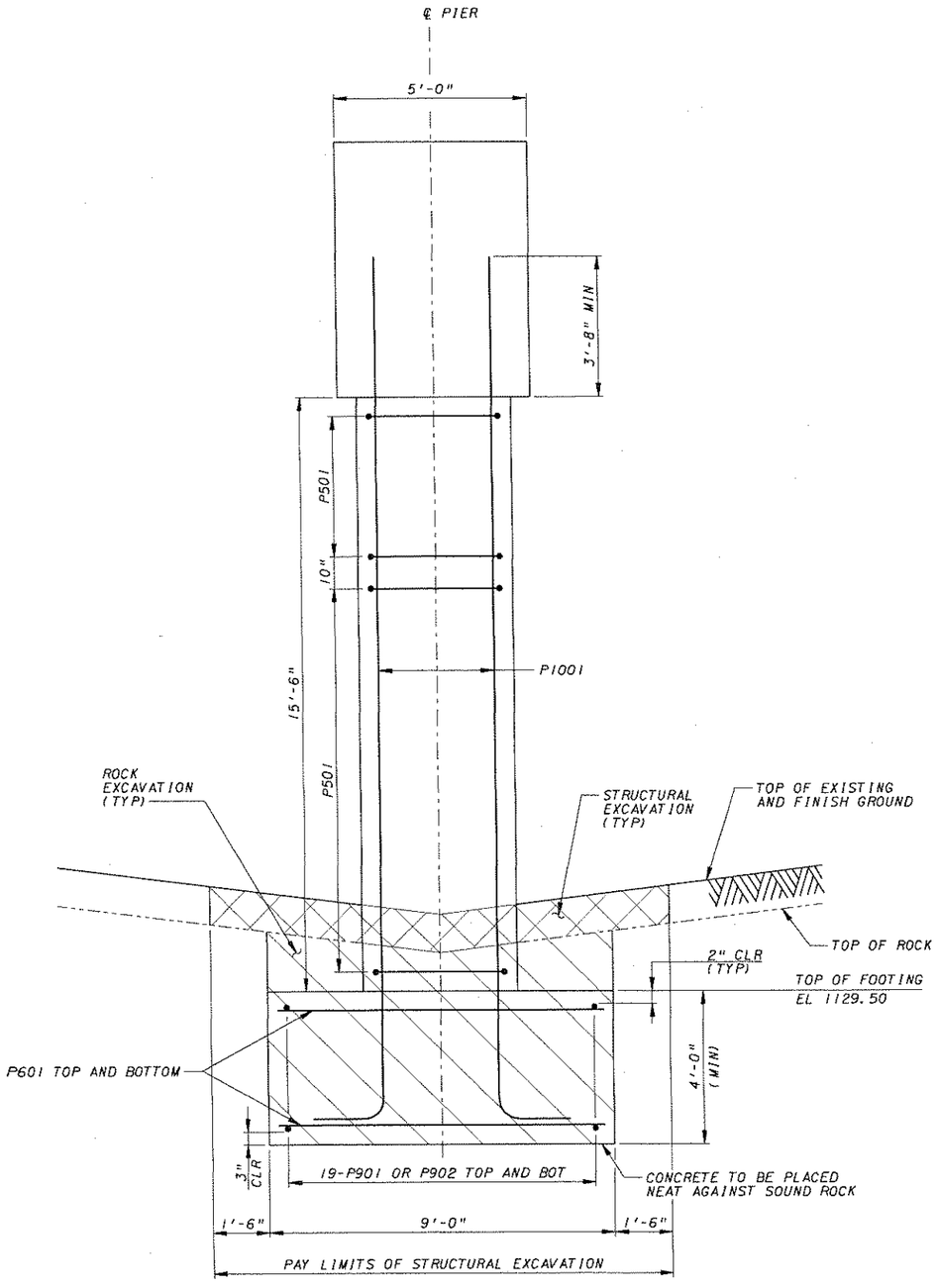

SECTION A-A (SH B16)

2' 1' 0 2'

½" = 1'-0"

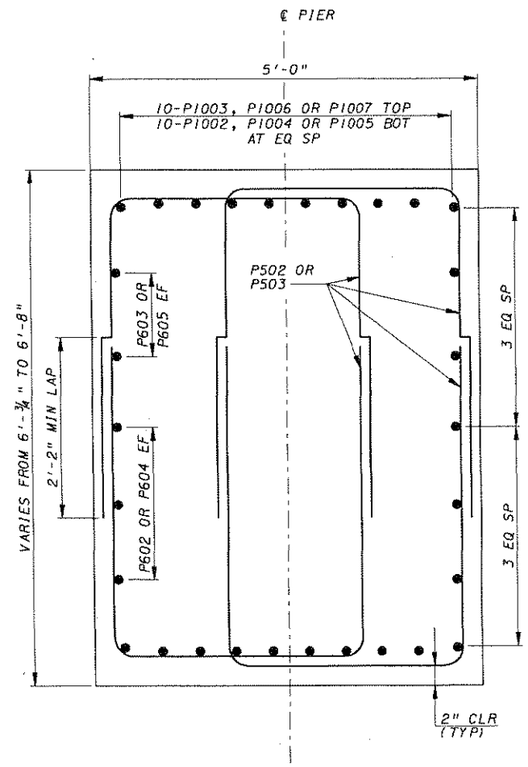

SECTION B-B (SH B16)

12" 6" 0 1'

1" = 1'-0"

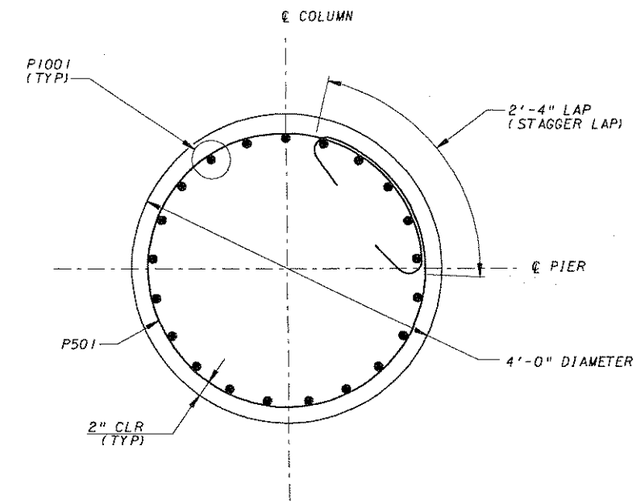

SECTION C-C (SH B16)

12" 6" 0 1'

1" = 1'-0"

NOTES:

1. FOR PIER PLAN AND ELEVATION, SEE SH B16.
2. VOLUME OF EXISTING PIER FOOTINGS WITHIN ROCK EXCAVATION LIMITS IS NOT INCLUDED IN QUANTITY. EXISTING PIER FOOTING REMOVAL IS INCLUDED IN ITEM 203001-000, "DISMANTLING STRUCTURE".
3. FF INDICATES FRONT FACE
   RF INDICATES REAR FACE
   EF INDICATES EACH FACE
4. FOR ADDITIONAL NOTES, SEE SH B16.

REVISION NUMBER	SHEET NUMBER	REVISION	DATE	BY

THE WEST VIRGINIA DEPARTMENT OF TRANSPORTATION
DIVISION OF HIGHWAYS

THREE SPRINGS DRIVE BRIDGE REPLACEMENT

PIER

DETAILS

HDR ENGINEERING, INC.
CONSULTING ENGINEERS
WEIRTON, WV (304) 748-8740

DESIGNED BY APR	DRAWN BY APR	CHECKED BY JWB	BRIDGE NO. 10565
DATE 06-05	DATE 06-05	DATE 08-05	SHEET NO. B17

FILE: p:\14361\dgn\STR_PIR_3SPR2.dgn

PUBLIC ROADS DIV.	STATE DIST. NO.	STATE PROJECT NO.	FEDERAL PROJECT NO.	FISCAL YEAR	COUNTY	SHEET NO.	TOTAL SHEETS
W.V.	6	U305-13 -0.02 00	BR-0013 10421E	2006	BROOKE	30	163

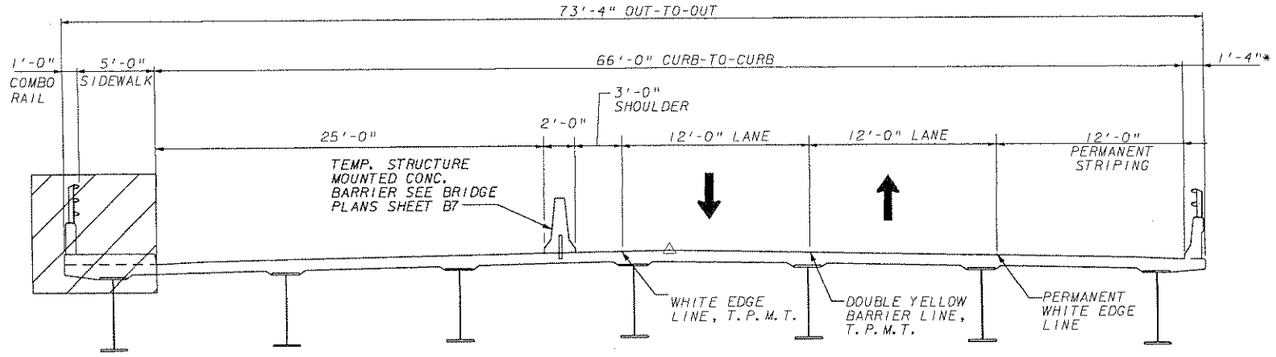

TYPICAL SECTION
BRIDGE CONSTRUCTION

PHASE 3

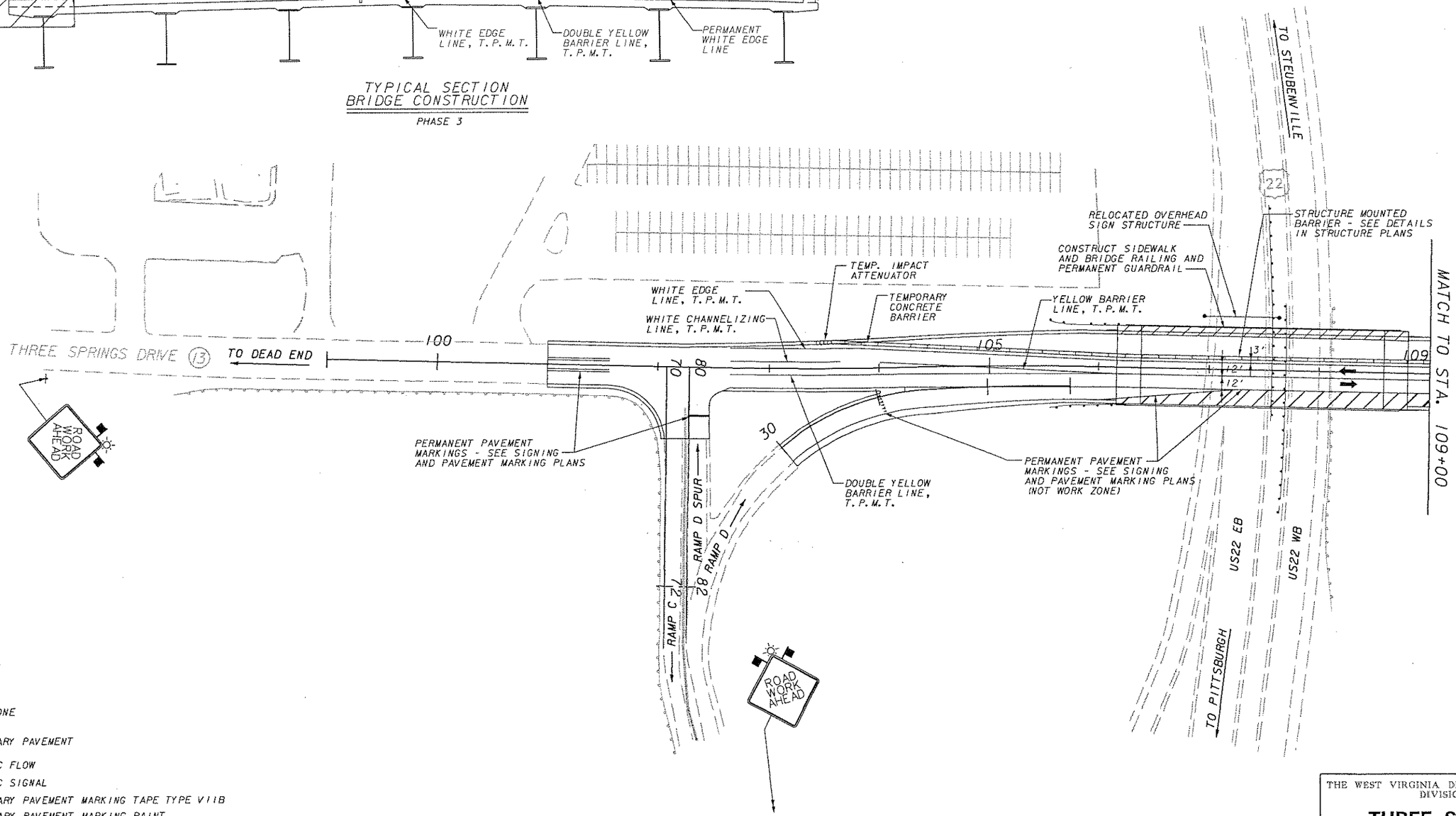

LEGEND

- WORK ZONE
- TEMPORARY PAVEMENT
- TRAFFIC FLOW
- TRAFFIC SIGNAL
- T.P.M.T. TEMPORARY PAVEMENT MARKING TAPE TYPE VIIB
- T.P.M.P. TEMPORARY PAVEMENT MARKING PAINT
- TEMPORARY CONCRETE BARRIER
- DRUMS
- TYPE III BARRICADE
- FLAG ORANGE, 18"x18" MIN.
- TYPE B FLASHING LIGHT
- TEMPORARY IMPACT ATTENUATOR

SCALE : 0 50 ft.

REVISION NUMBER	SHEET NUMBER	REVISION	DATE	BY

MT-7

THE WEST VIRGINIA DEPARTMENT OF TRANSPORTATION
DIVISION OF HIGHWAYS

THREE SPRINGS DRIVE MAINTENANCE OF TRAFFIC PHASE 3

HDR ENGINEERING, INC.
CONSULTING ENGINEERS
WEIRTON, WV (304) 748-8740

Q.C. CHECKED JBI DATE 12/05 P.M. CHECKED TPM DATE TDT2

DATE: 12/13/2005

FILE: x:\1438\tcf_tcp_3308ms107.dgn

PUBLIC ROADS DIV.	STATE DIST. NO.	STATE PROJECT NO.	FEDERAL PROJECT NO.	FISCAL YEAR	COUNTY	SHEET NO.	TOTAL SHEETS
W.V.	6	U305-13 -0.02 00	BR-0013 (042)E	2006	BROOKE	31	163

LEGEND

- WORK ZONE
- TEMPORARY PAVEMENT
- TRAFFIC FLOW
- TRAFFIC SIGNAL
- T.P.M.T. TEMPORARY PAVEMENT MARKING TAPE TYPE VIIB
- T.P.M.P. TEMPORARY PAVEMENT MARKING PAINT
- TEMPORARY CONCRETE BARRIER
- DRUMS
- TYPE III BARRICADE
- FLAG ORANGE, 18"x18" MIN.
- TYPE B FLASHING LIGHT
- TEMPORARY IMPACT ATTENUATOR

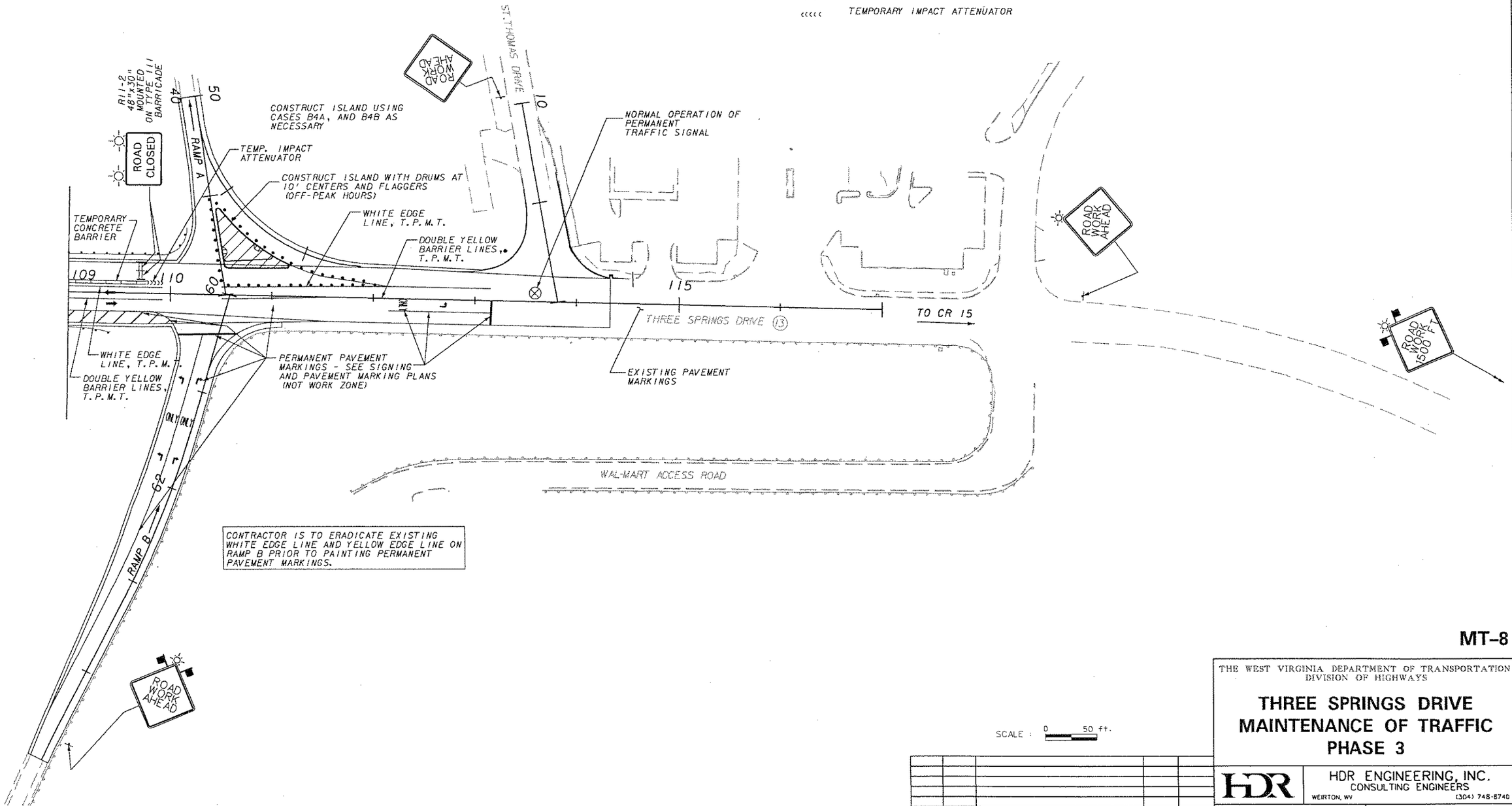

CONTRACTOR IS TO ERADICATE EXISTING WHITE EDGE LINE AND YELLOW EDGE LINE ON RAMP B PRIOR TO PAINTING PERMANENT PAVEMENT MARKINGS.

SCALE : 0 50 ft.

MT-8

THE WEST VIRGINIA DEPARTMENT OF TRANSPORTATION
DIVISION OF HIGHWAYS

THREE SPRINGS DRIVE MAINTENANCE OF TRAFFIC PHASE 3

HDR ENGINEERING, INC.
CONSULTING ENGINEERS
WEIRTON, WV (304) 748-8740

REVISION NUMBER	SHEET NUMBER	REVISION	DATE	BY

Q.C. CHECKED JBI DATE 12/05 P.M. CHECKED TPM DATE TDT2

DATE: 12/13/2005

FILE: k:\14367\tf_tep_3508mt08.dgn

PUBLIC ROADS DIV.	STATE DIST. NO.	STATE PROJECT NO.	FEDERAL PROJECT NO.	FISCAL YEAR	COUNTY	SHEET NO.	TOTAL SHEETS
W.V.	6	U305-13 -0.02 00	BR-0013 (0421)E	2006	BROOKE	32	163

NOTES:

- ALL DETOUR SIGNS ON US 22 ARE TO BE COVERED WHEN DETOUR IS NOT BEING USED
- TRAFFIC DIRECTORS ARE TO GIVE THE RIGHT OF WAY TO TRUCKS TRAVELING UPHILL AT THE FOLLOWING INTERSECTIONS:
  - -COVE HILL ROAD AND THREE SPRINGS DRIVE
  - -COVE HILL ROAD AND PENNSYLVANIA AVENUE

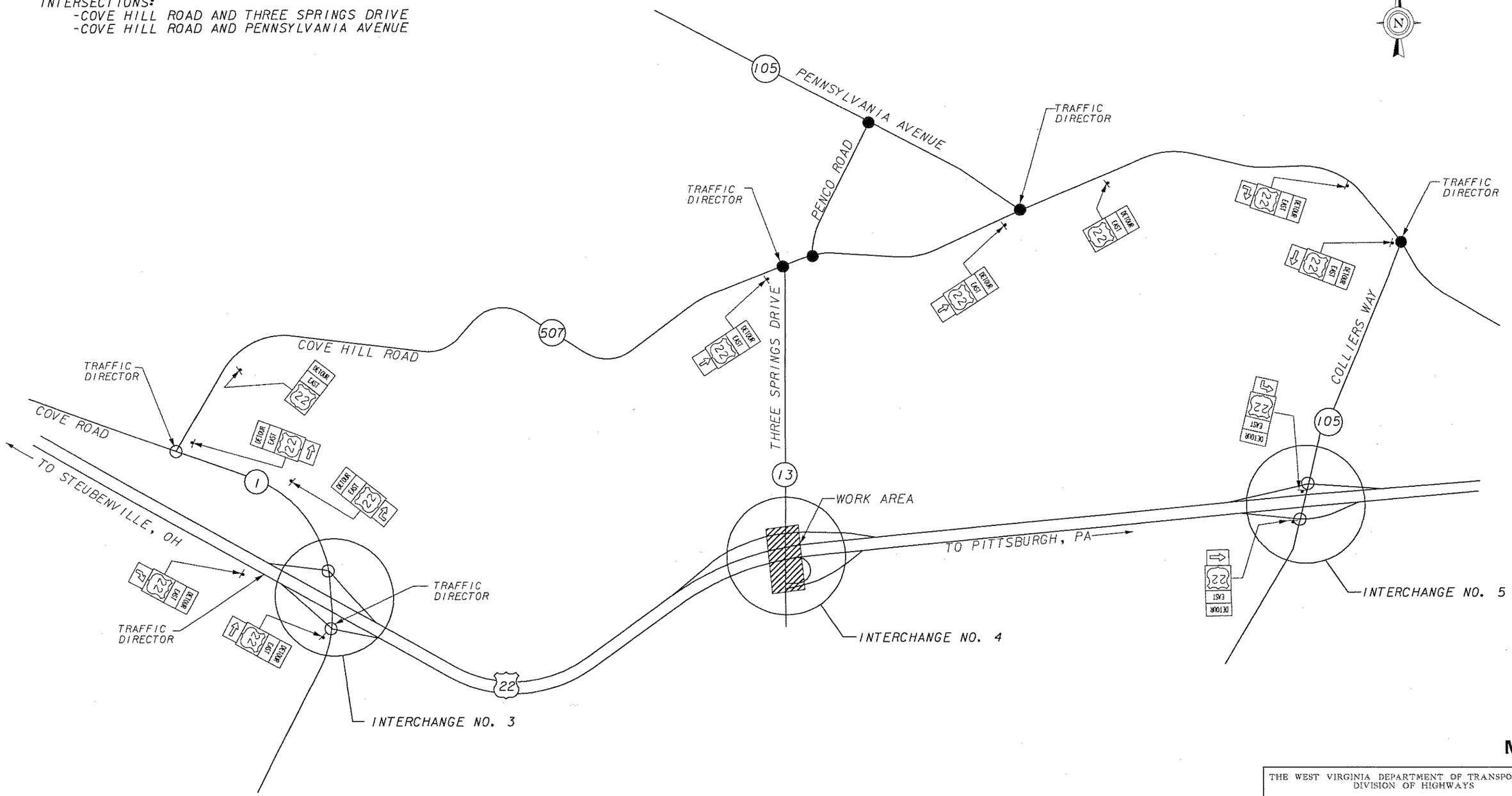

MT-9

LEGEND:

● - SIGNALIZED
○ - UNSIGNALIZED

REVISION NUMBER	SHEET NUMBER	REVISION	DATE	BY

THE WEST VIRGINIA DEPARTMENT OF TRANSPORTATION
DIVISION OF HIGHWAYS

MAINTENANCE OF TRAFFIC US 22 EB DETOUR

HDR ENGINEERING, INC.
CONSULTING ENGINEERS
WEIRTON, WV (304) 748-8740

Q.C. CHECKED JBI DATE 12/05 | P.M. CHECKED TPM DATE TDT2

DATE: 12/13/2005

FILE: x:\14357\rf_tcp_350Bmt09.dgn

PUBLIC ROADS DIV.	STATE DIST. NO.	STATE PROJECT NO.	FEDERAL PROJECT NO.	FISCAL YEAR	COUNTY	SHEET NO.	TOTAL SHEETS
W.V.	6	U305-13 -0.02 00	BR-0013 (042)E	2006	BROOKE	33	163

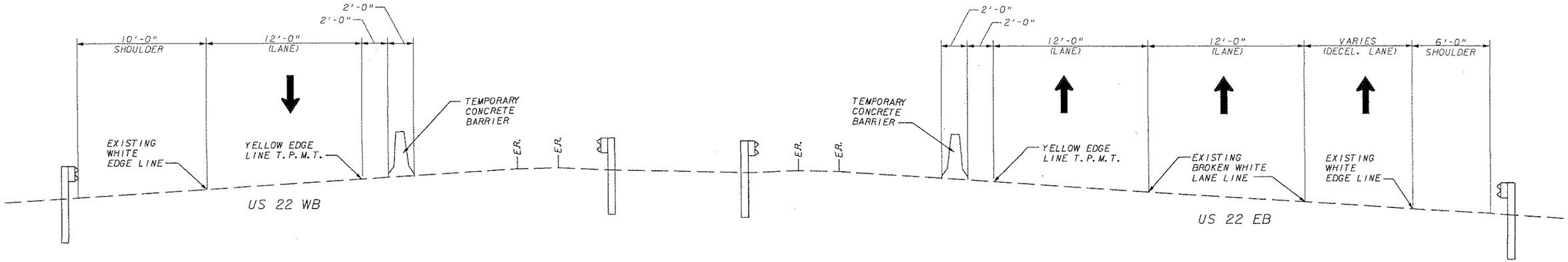

TYPICAL SECTION
US 22

PHASES 1 & 2

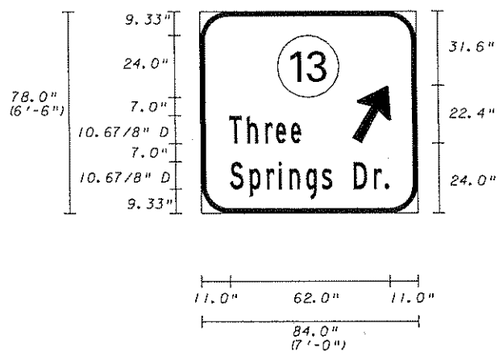

SIGN NUMBER	
WIDTH x HEIGHT	7.0'x6.5'
BORDER WIDTH	2.0"
CORNER RADIUS	9.0"
MOUNTING	TYPE: GROUND
BACKGROUND	TYPE: REFLECTIVE
	COLOR: GREEN
LEGEND/BORDER	TYPE: REFLECTIVE
	COLOR: WHITE

SYMBOL	X	Y	WIDTH	HEIGHT
SHIELD	30.0	9.33	24.0	24.0
ARROW	57.9	31.6	15.1	24.3

LETTER SPACINGS ARE TO THE START OF THE NEXT LETTER

														LENGTH	SERIES
	T	h	r	e	e										10.67/8" D
11.0	6.9	6.2	4.0	5.5	5.2	45.2								27.8	
	S	p	r	i	n	g	s		D	r	.				10.67/8" D
11.0	7.8	6.1	4.0	2.9	6.2	6.1	4.1	10.7	8.3	4.0	1.8	11.0		62.0	

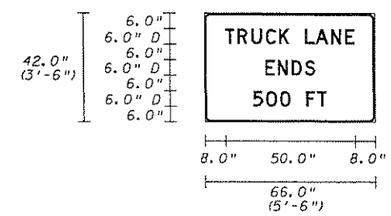

SIGN NUMBER	
WIDTH x HEIGHT	5.5'x3.5'
BORDER WIDTH	0.88"
CORNER RADIUS	1.62"
MOUNTING	TYPE: GROUND
BACKGROUND	TYPE: REFLECTIVE
	COLOR: YELLOW
LEGEND/BORDER	TYPE: REFLECTIVE
	COLOR: BLACK

SYMBOL	X	Y	WIDTH	HEIGHT

LETTER SPACINGS ARE TO THE START OF THE NEXT LETTER

														LENGTH	SERIES
	T	R	U	C	K		L	A	N	E					6" D
8.0	3.9	5.1	5.5	5.3	4.9	6.0	3.9	5.5	5.5	4.4	8.0			50.0	
	E	N	D	S											6" D
23.4	4.0	5.5	5.4	4.4	23.3									19.3	
	5	0	0		F	T									6" D
18.6	4.7	5.5	4.9	6.0	3.9	3.9	18.5							28.9	

MT-10

THE WEST VIRGINIA DEPARTMENT OF TRANSPORTATION
DIVISION OF HIGHWAYS

MAINTENANCE OF TRAFFIC TYPICAL SECTIONS AND SIGN FABRICATIONS

HDR ENGINEERING, INC.
CONSULTING ENGINEERS
WEIRTON, WV
(304) 748-8740

REVISION NUMBER	SHEET NUMBER	REVISION	DATE	BY

Q.C. CHECKED JBI DATE 12/05 P.M. CHECKED TPM DATE TDT2

DATE: 12/13/2005

FILE: x:\1436TV\rl_tcp_350bmt10.dgn

PUBLIC ROADS DIV.	STATE DIST. NO.	STATE PROJECT NO.	FEDERAL PROJECT NO.	FISCAL YEAR	COUNTY	SHEET NO.	TOTAL SHEETS
W.V.	6	U305-13 -0.02 00	BR-0013 (042)E	2006	BROOKE	34	163

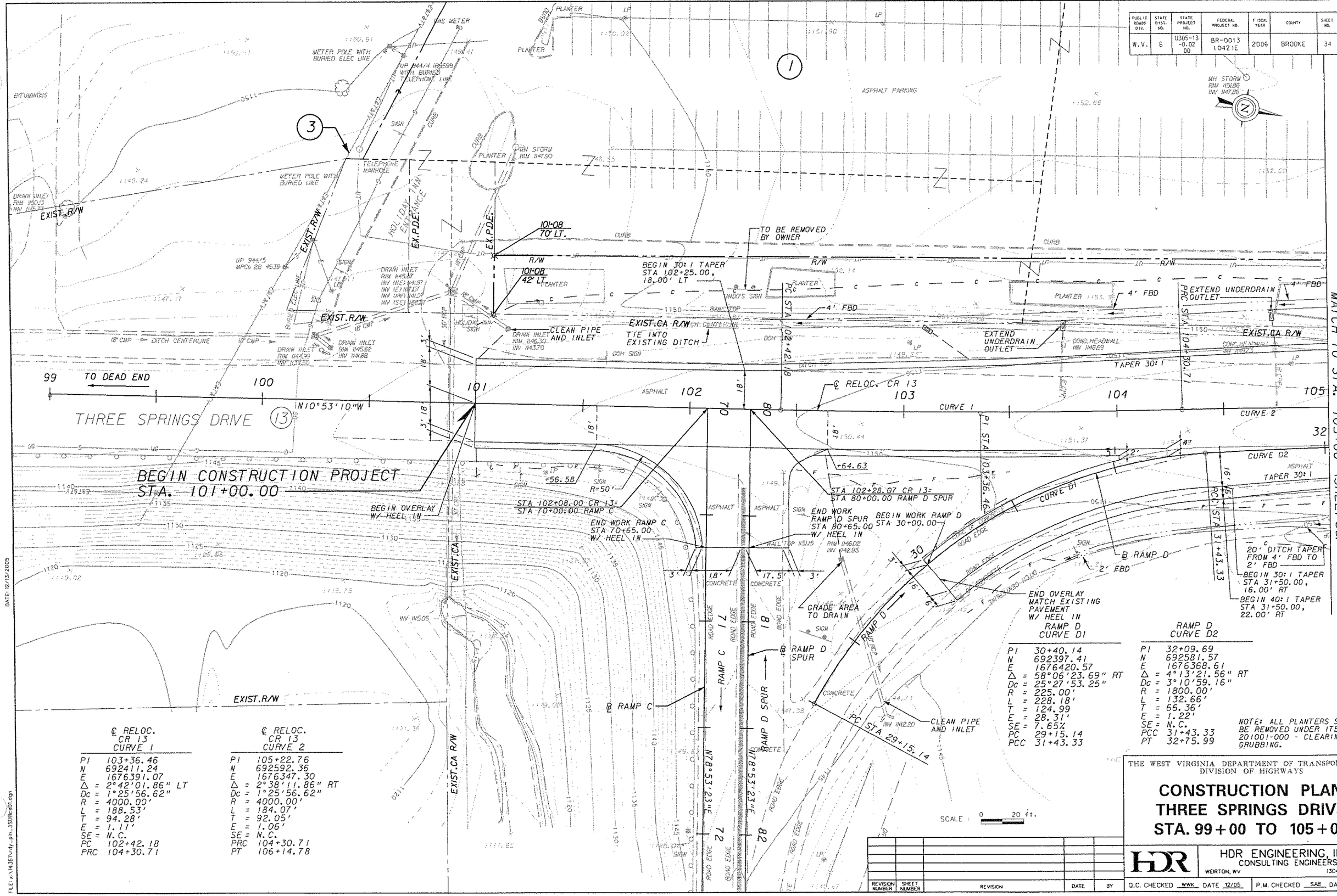

℄ RELOC. CR 13 CURVE 1

PI	103+36.46
N	692411.24
E	1676391.07
Δ =	2°42'01.86" LT
Dc =	1°25'56.62"
R =	4000.00'
L =	188.53'
T =	94.28'
E =	1.11'
SE =	N.C.
PC	102+42.18
PRC	104+30.71

℄ RELOC. CR 13 CURVE 2

PI	105+22.76
N	692592.36
E	1676347.30
Δ =	2°38'11.86" RT
Dc =	1°25'56.62"
R =	4000.00'
L =	184.07'
T =	92.05'
E =	1.06'
SE =	N.C.
PRC	104+30.71
PT	106+14.78

RAMP D CURVE D1

PI	30+40.14
N	692397.41
E	1676420.57
Δ =	58°06'23.69" RT
Dc =	25°27'53.25"
R =	225.00'
L =	228.18'
T =	124.99
E =	28.31'
SE =	7.65%
PC	29+15.14
PCC	31+43.33

RAMP D CURVE D2

PI	32+09.69
N	692581.57
E	1676368.61
Δ =	4°13'21.56" RT
Dc =	3°10'59.16"
R =	1800.00'
L =	132.66'
T =	66.36'
E =	1.22'
SE =	N.C.
PCC	31+43.33
PT	32+75.99

NOTE: ALL PLANTERS SHALL BE REMOVED UNDER ITEM 201001-000 - CLEARING AND GRUBBING.

REVISION NUMBER	SHEET NUMBER	REVISION	DATE	BY

THE WEST VIRGINIA DEPARTMENT OF TRANSPORTATION
DIVISION OF HIGHWAYS

CONSTRUCTION PLAN
THREE SPRINGS DRIVE
STA. 99+00 TO 105+00

HDR ENGINEERING, INC.
CONSULTING ENGINEERS
WEIRTON, WV (304) 748-8740

Q.C. CHECKED WWK DATE 12/05 | P.M. CHECKED SAB DATE 12/05

DATE: 12/13/2005

FILE: x:\14361\v-dy_pln_35U8cD1.dgn

PUBLIC ROADS DIV.	STATE DIST. NO.	STATE PROJECT NO.	FEDERAL PROJECT NO.	FISCAL YEAR	COUNTY	SHEET NO.	TOTAL SHEETS
W.V.	6	U305-13 -0.02 00	BR-0013 (042)E	2006	BROOKE	35	163

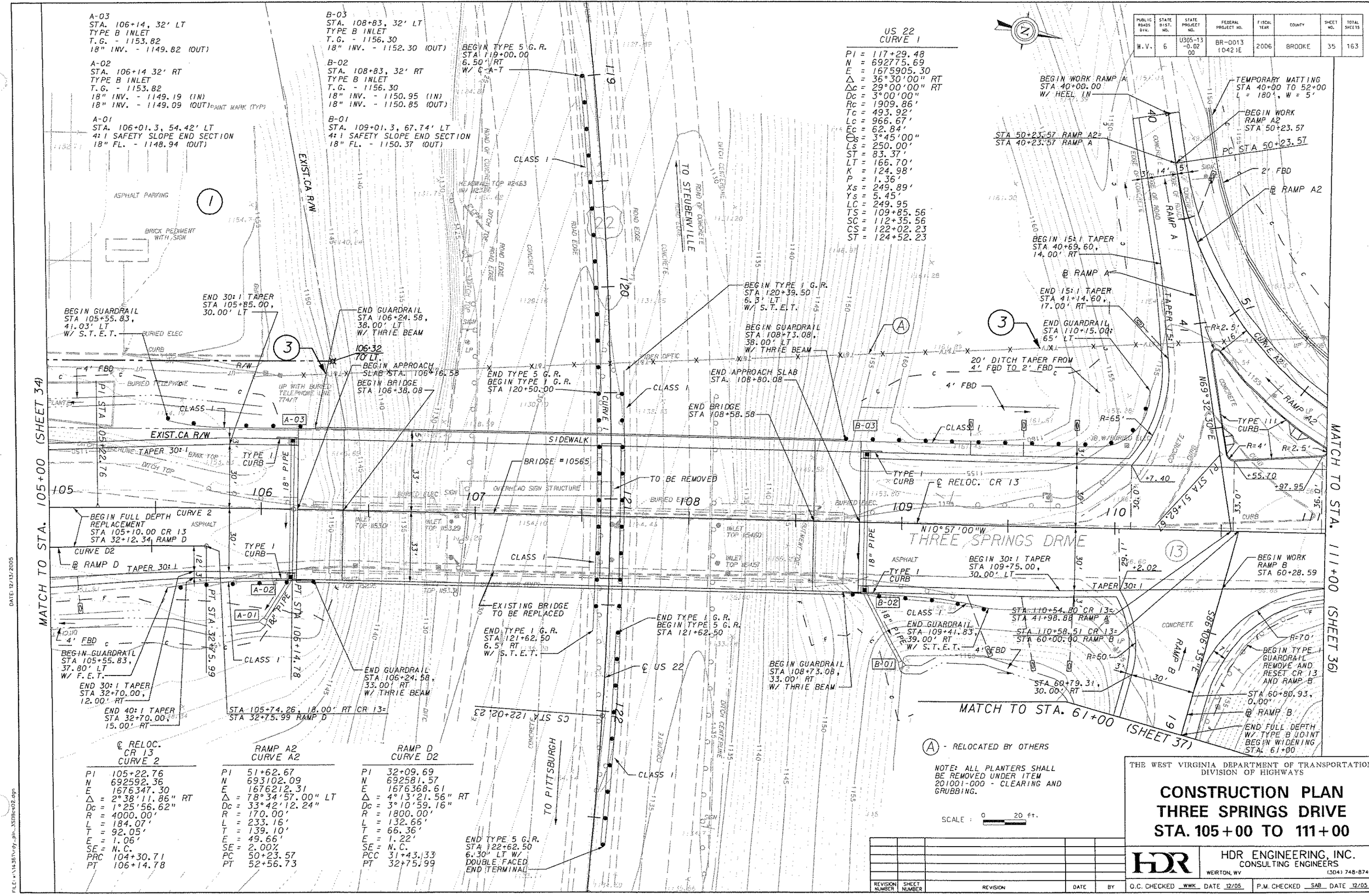

REVISION NUMBER	SHEET NUMBER	REVISION	DATE	BY

THE WEST VIRGINIA DEPARTMENT OF TRANSPORTATION
DIVISION OF HIGHWAYS

CONSTRUCTION PLAN
THREE SPRINGS DRIVE
STA. 105+00 TO 111+00

HDR ENGINEERING, INC.
CONSULTING ENGINEERS
WEIRTON, WV (304) 748-8740

O.C. CHECKED WWK DATE 12/05 P.M. CHECKED SAB DATE 12/05

DATE: 12/13/2005

FILE: x:\14361\rdy_pln_35ffbrc02.dgn

PUBLIC ROADS DIV.	STATE DIST. NO.	STATE PROJECT NO.	FEDERAL PROJECT NO.	FISCAL YEAR	COUNTY	SHEET NO.	TOTAL SHEETS
W.V.	6	U305-13 -0.02 00	BR-0013 1042)E	2006	BROOKE	36	163

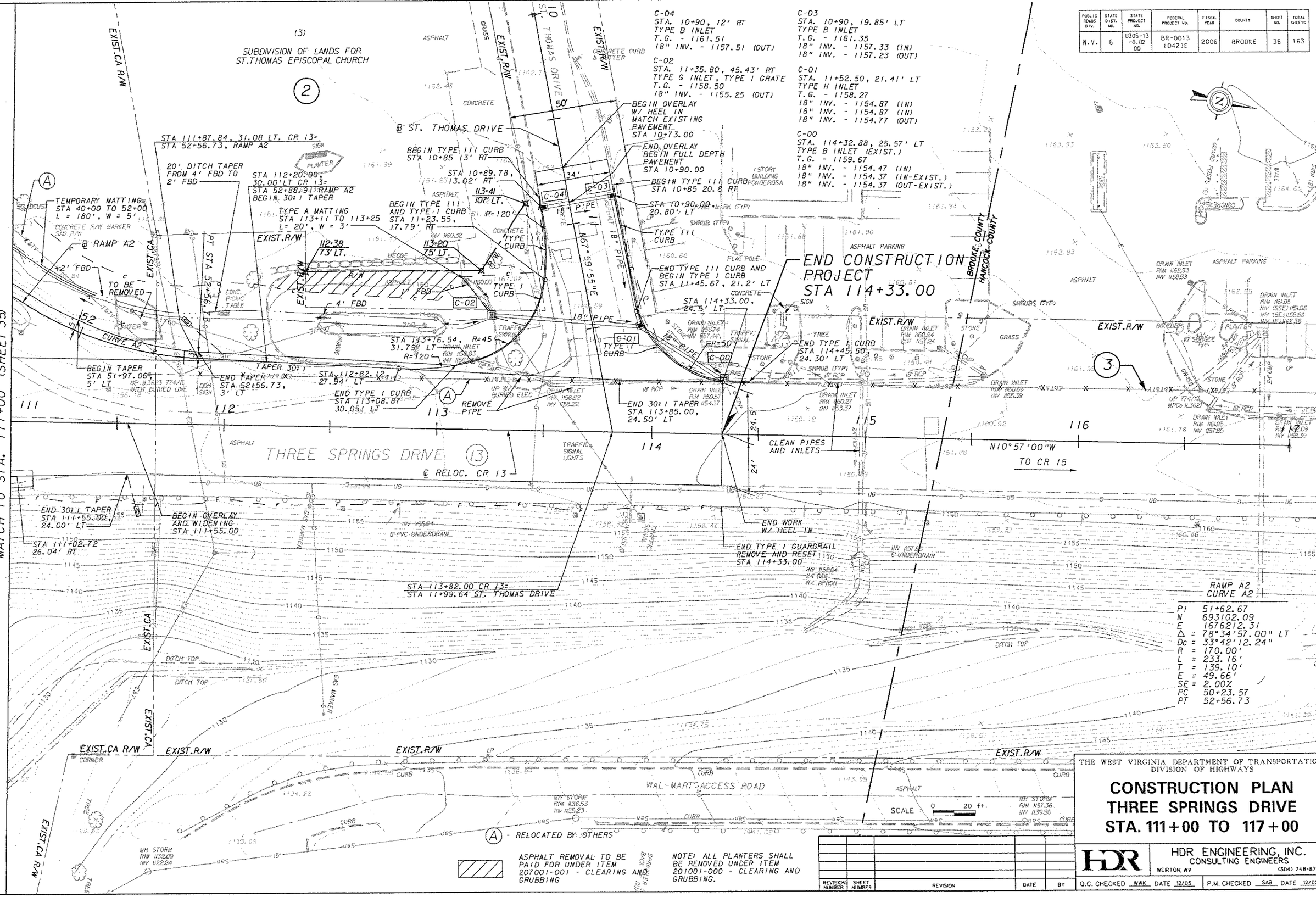

REVISION NUMBER	SHEET NUMBER	REVISION	DATE	BY

THE WEST VIRGINIA DEPARTMENT OF TRANSPORTATION
DIVISION OF HIGHWAYS

CONSTRUCTION PLAN
THREE SPRINGS DRIVE
STA. 111+00 TO 117+00

HDR ENGINEERING, INC.
CONSULTING ENGINEERS
WEIRTON, WV (304) 748-8740

Q.C. CHECKED WWK DATE 12/05 P.M. CHECKED SAB DATE 12/05

PUBLIC ROADS DIV.	STATE DIST. NO.	STATE PROJECT NO.	FEDERAL PROJECT NO.	FISCAL YEAR	COUNTY	SHEET NO.	TOTAL SHEETS
W.V.	6	U305-13 -0.02 00	BR-0013 (042)E	2006	BROOKE	37	163

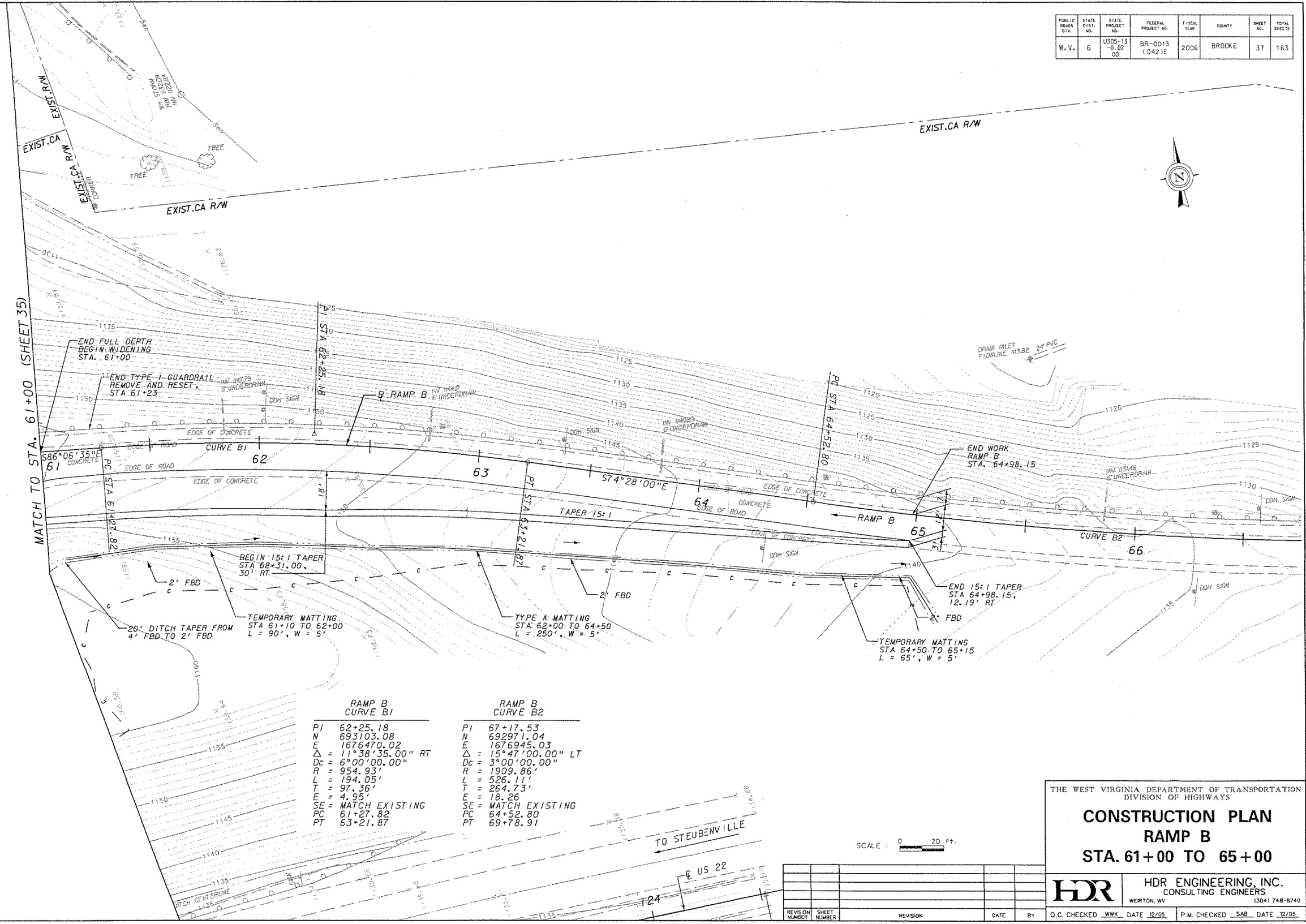

RAMP B CURVE B1	
PI	62+25.18
N	693103.08
E	1676470.02
Δ =	11°38'35.00" RT
Dc =	6°00'00.00"
R =	954.93'
L =	194.05'
T =	97.36'
E =	4.95'
SE =	MATCH EXISTING
PC	61+27.82
PT	63+21.87

RAMP B CURVE B2	
PI	67+17.53
N	692971.04
E	1676945.03
Δ =	15°47'00.00" LT
Dc =	3°00'00.00"
R =	1909.86'
L =	526.11'
T =	264.73'
E =	18.26
SE =	MATCH EXISTING
PC	64+52.80
PT	69+78.91

THE WEST VIRGINIA DEPARTMENT OF TRANSPORTATION
DIVISION OF HIGHWAYS

CONSTRUCTION PLAN
RAMP B
STA. 61+00 TO 65+00

HDR ENGINEERING, INC.
CONSULTING ENGINEERS
WEIRTON, WV (304) 748-8740

REVISION NUMBER	SHEET NUMBER	REVISION	DATE	BY

Q.C. CHECKED WWK DATE 12/05 P.M. CHECKED SAB DATE 12/05

DATE: 12/13/2005

FILE: x:\1436\rdy_pln_3508ck04.dgn

PUBLIC ROADS DIV.	STATE DIST. NO.	STATE PROJECT NO.	FEDERAL PROJECT NO.	FISCAL YEAR	COUNTY	SHEET NO.	TOTAL SHEETS
W.V.	6	U305-13 -0.02 00	BR-0013 (042)E	2006	BROOKE	38	163

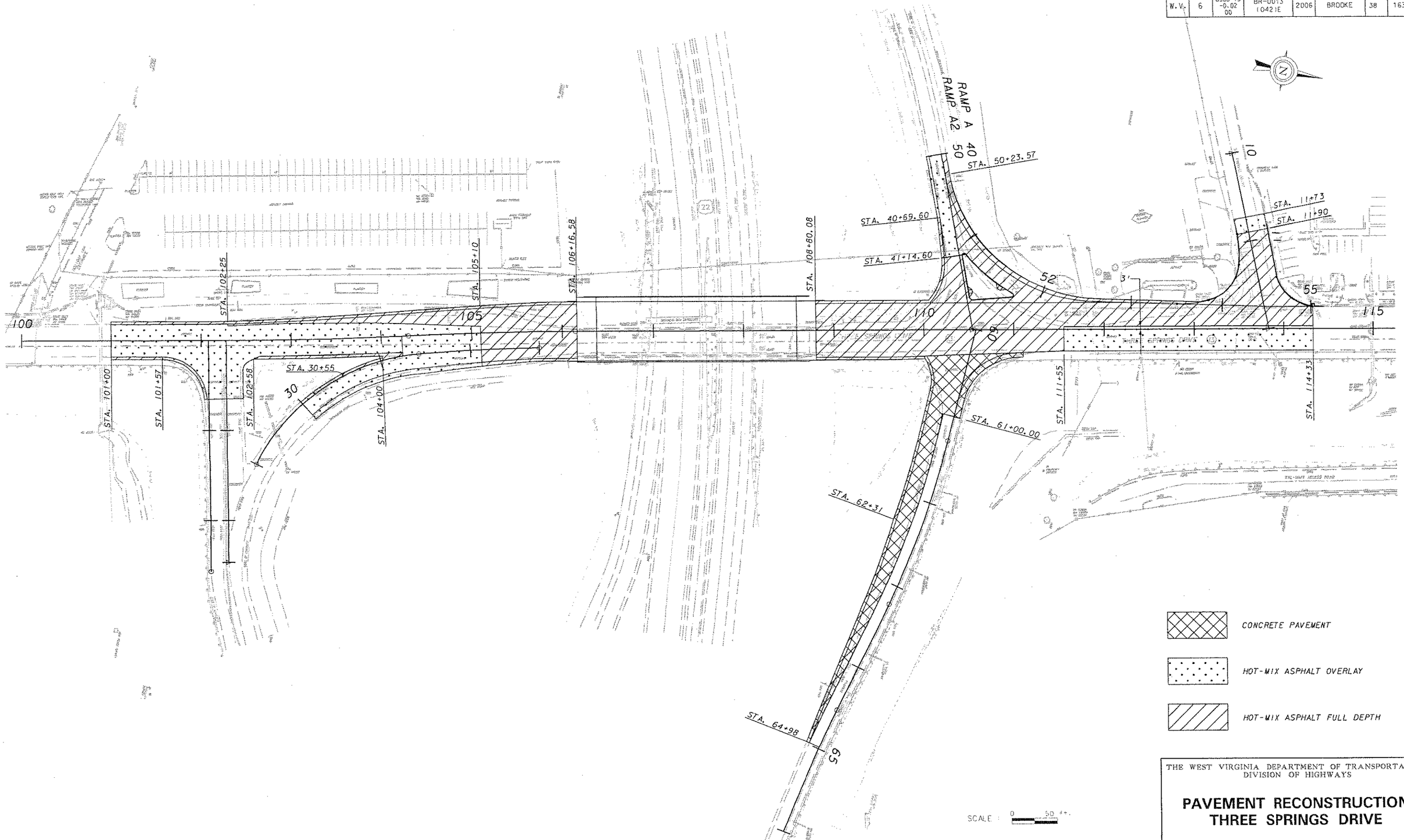

THE WEST VIRGINIA DEPARTMENT OF TRANSPORTATION
DIVISION OF HIGHWAYS

PAVEMENT RECONSTRUCTION
THREE SPRINGS DRIVE

REVISION NUMBER	SHEET NUMBER	REVISION	DATE	BY

HDR ENGINEERING, INC.
CONSULTING ENGINEERS
WEIRTON, WV (304) 748-8740

Q.C. CHECKED WWK DATE 12/05 P.M. CHECKED SAB DATE 12/05

DATE: 12/13/2005

FILE: x:\14361\rdy_prv_3509B04.dgn

PUBLIC ROADS DIV.	STATE DIST. NO.	STATE PROJECT NO.	FEDERAL PROJECT NO.	FISCAL YEAR	COUNTY	SHEET NO.	TOTAL SHEETS
W.V.	6	U305-13 -0.02 00	BR-0013 (042)E	2006	BROOKE	39	163

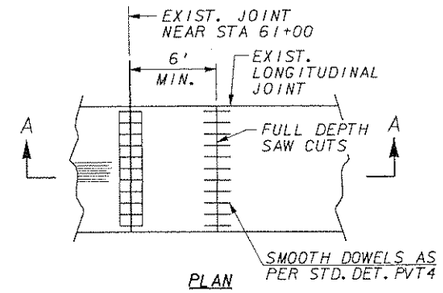

PLAN

SECTION A-A

DETAIL A

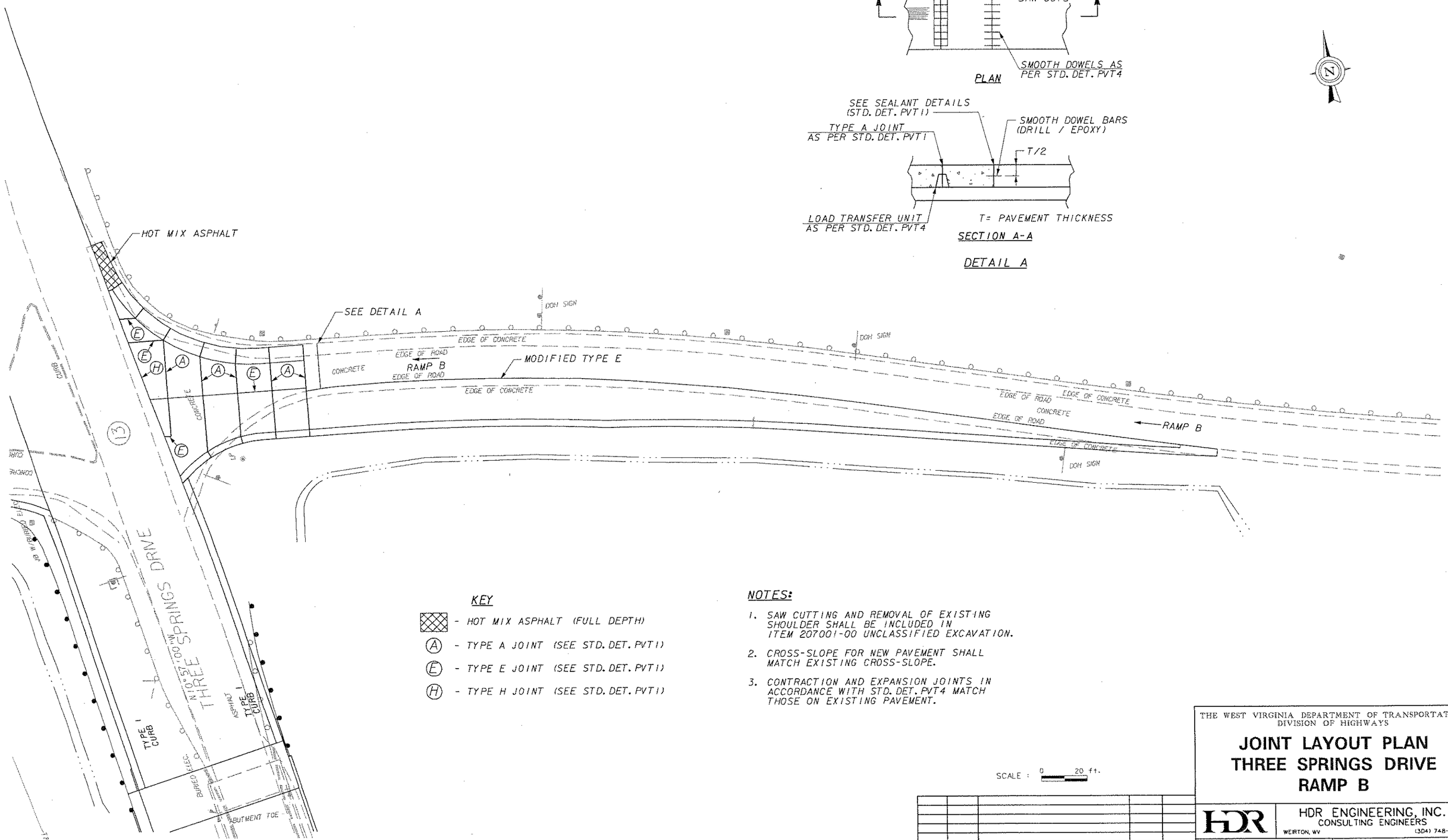

KEY

- HOT MIX ASPHALT (FULL DEPTH)
- (A) - TYPE A JOINT (SEE STD. DET. PVT1)
- (E) - TYPE E JOINT (SEE STD. DET. PVT1)
- (H) - TYPE H JOINT (SEE STD. DET. PVT1)

NOTES:

1. SAW CUTTING AND REMOVAL OF EXISTING SHOULDER SHALL BE INCLUDED IN ITEM 207001-00 UNCLASSIFIED EXCAVATION.
2. CROSS-SLOPE FOR NEW PAVEMENT SHALL MATCH EXISTING CROSS-SLOPE.
3. CONTRACTION AND EXPANSION JOINTS IN ACCORDANCE WITH STD. DET. PVT4 MATCH THOSE ON EXISTING PAVEMENT.

SCALE : 0 20 ft.

REVISION NUMBER	SHEET NUMBER	REVISION	DATE	BY

THE WEST VIRGINIA DEPARTMENT OF TRANSPORTATION
DIVISION OF HIGHWAYS

JOINT LAYOUT PLAN
THREE SPRINGS DRIVE
RAMP B

HDR ENGINEERING, INC.
CONSULTING ENGINEERS
WEIRTON, WV (304) 748-8740

Q.C. CHECKED WWK DATE 12/05 P.M. CHECKED SAB DATE 12/05

DATE: 12/13/2005

FILE: x:\19351\rdy_pln_3508ed05.dgn

PUBLIC ROADS DIV.	STATE DIST. NO.	STATE PROJECT NO.	FEDERAL PROJECT NO.	FISCAL YEAR	COUNTY	SHEET NO.	TOTAL SHEETS
W.V.	6	U305-13 -0.02 00	BR-0013 (042)E	2006	BROOKE	40	163

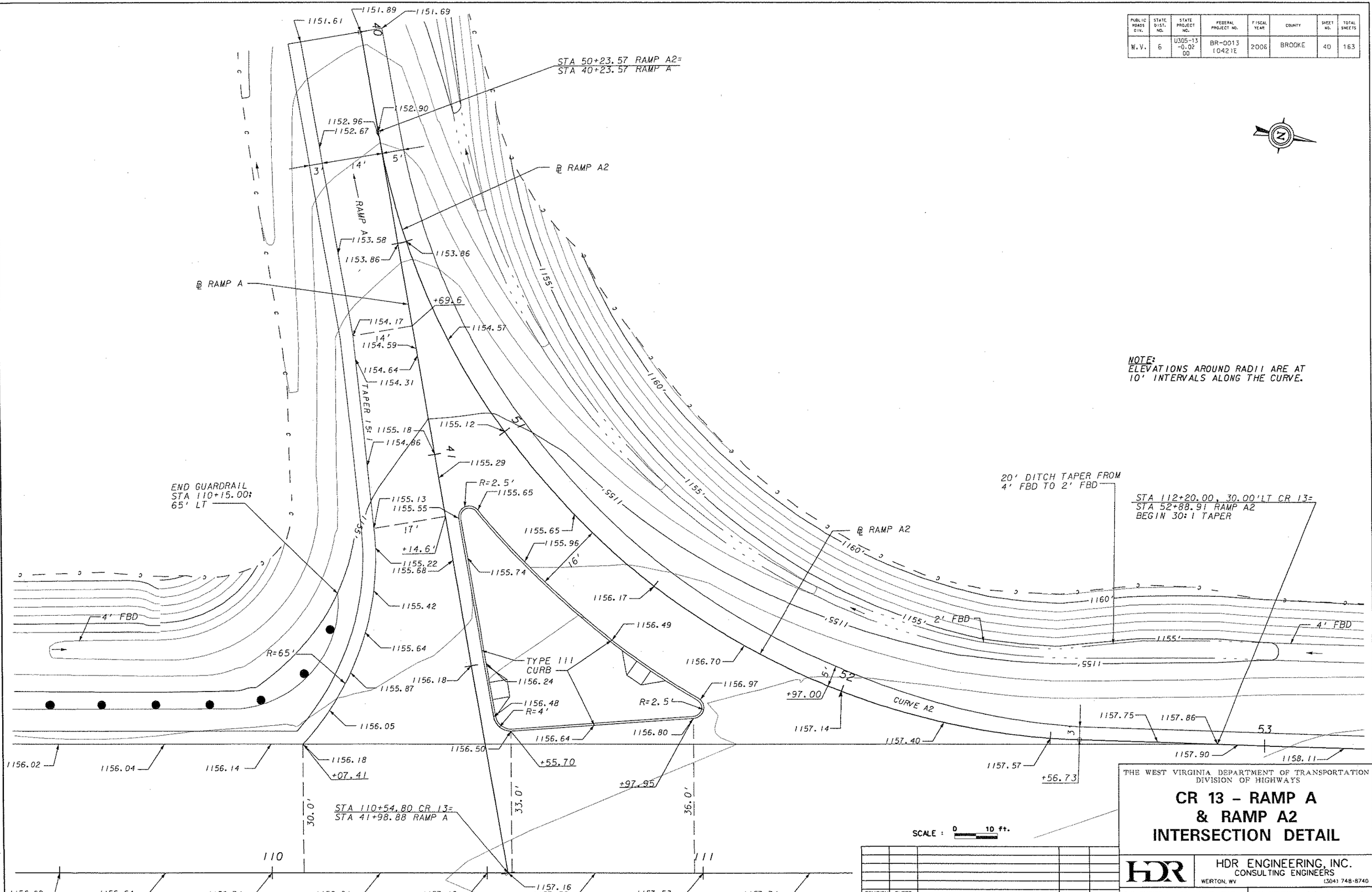

NOTE:
ELEVATIONS AROUND RADII ARE AT 10' INTERVALS ALONG THE CURVE.

SCALE : 0 10 ft.

REVISION NUMBER	SHEET NUMBER	REVISION	DATE	BY

THE WEST VIRGINIA DEPARTMENT OF TRANSPORTATION
DIVISION OF HIGHWAYS

CR 13 – RAMP A & RAMP A2 INTERSECTION DETAIL

HDR ENGINEERING, INC.
CONSULTING ENGINEERS
WEIRTON, WV (304) 748-8740

Q.C. CHECKED WWK DATE 12/05 | P.M. CHECKED SAB DATE 12/05

DATE: 12/13/2005

FILE: x:\143GV\dgy_pov_350RD1.dgn

PUBLIC ROADS DIV.	STATE DIST. NO.	STATE PROJECT NO.	FEDERAL PROJECT NO.	FISCAL YEAR	COUNTY	SHEET NO.	TOTAL SHEETS
W.V.	6	U305-13 -0.02 00	BR-0013 (042)E	2006	BROOKE	41	163

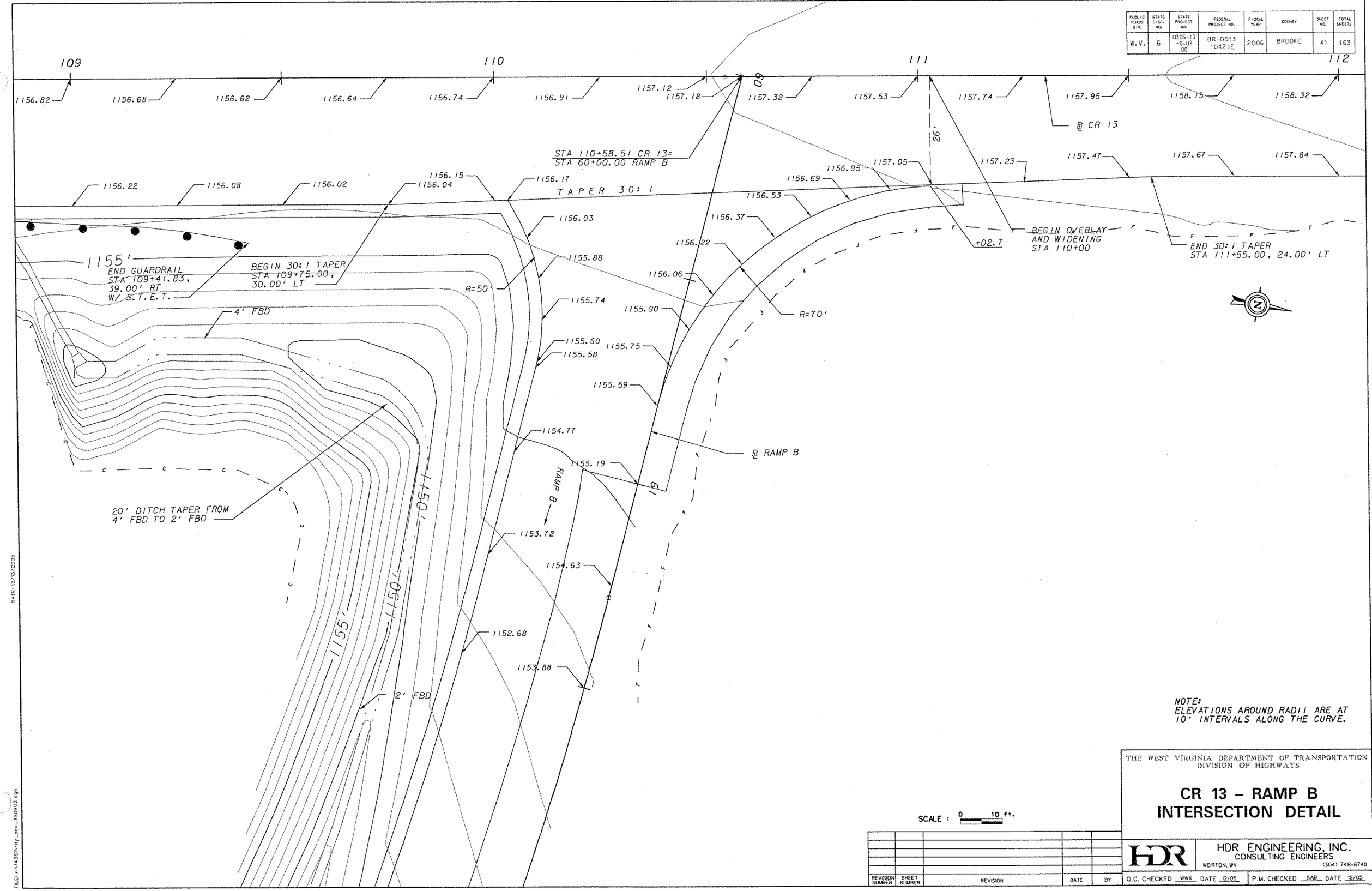

NOTE:
ELEVATIONS AROUND RADII ARE AT 10' INTERVALS ALONG THE CURVE.

SCALE : 0 10 ft.

REVISION NUMBER	SHEET NUMBER	REVISION	DATE	BY

THE WEST VIRGINIA DEPARTMENT OF TRANSPORTATION
DIVISION OF HIGHWAYS

CR 13 – RAMP B INTERSECTION DETAIL

HDR ENGINEERING, INC.
CONSULTING ENGINEERS
WEIRTON, WV (304) 748-8740

O.C. CHECKED WWK DATE 12/05 P.M. CHECKED SAB DATE 12/05

DATE: 12/13/2005

FILE: x:\1436\v-dy_pov_350802.dgn

PUBLIC ROADS DIV.	STATE DIST. NO.	STATE PROJECT NO.	FEDERAL PROJECT NO.	FISCAL YEAR	COUNTY	SHEET NO.	TOTAL SHEETS
W.V.	6	U305-13 -0-02 00	BR-0013 (042)E	2006	BROOKE	42	163

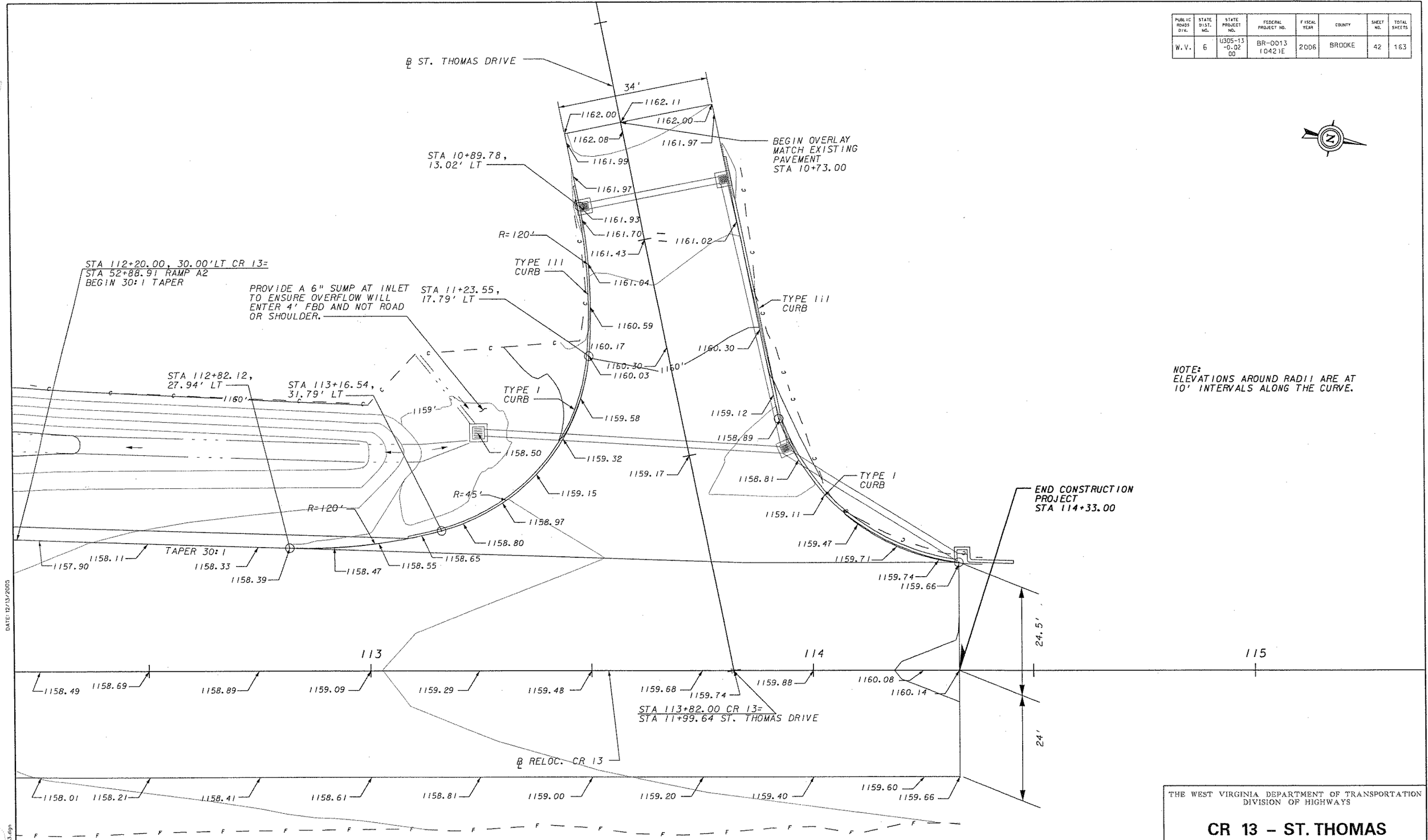

NOTE:
ELEVATIONS AROUND RADII ARE AT
10' INTERVALS ALONG THE CURVE.

SCALE : 0 10 ft.

REVISION NUMBER	SHEET NUMBER	REVISION	DATE	BY

THE WEST VIRGINIA DEPARTMENT OF TRANSPORTATION
DIVISION OF HIGHWAYS

CR 13 – ST. THOMAS INTERSECTION DETAIL

HDR ENGINEERING, INC.
CONSULTING ENGINEERS
WEIRTON, WV (304) 748-8740

O.C. CHECKED WWK DATE 12/05 P.M. CHECKED SAB DATE 12/05

DATE: 12/13/2005

FILE: x:\1438\rdy_pov_3S0803.dgn

PUBLIC ROADS DIV.	STATE DIST. NO.	STATE PROJECT NO.	FEDERAL PROJECT NO.	FISCAL YEAR	COUNTY	SHEET NO.	TOTAL SHEETS
W.V.	6	U305-13 -0.02 00	BR-0013 (042)E	2006	BROOKE	43	163

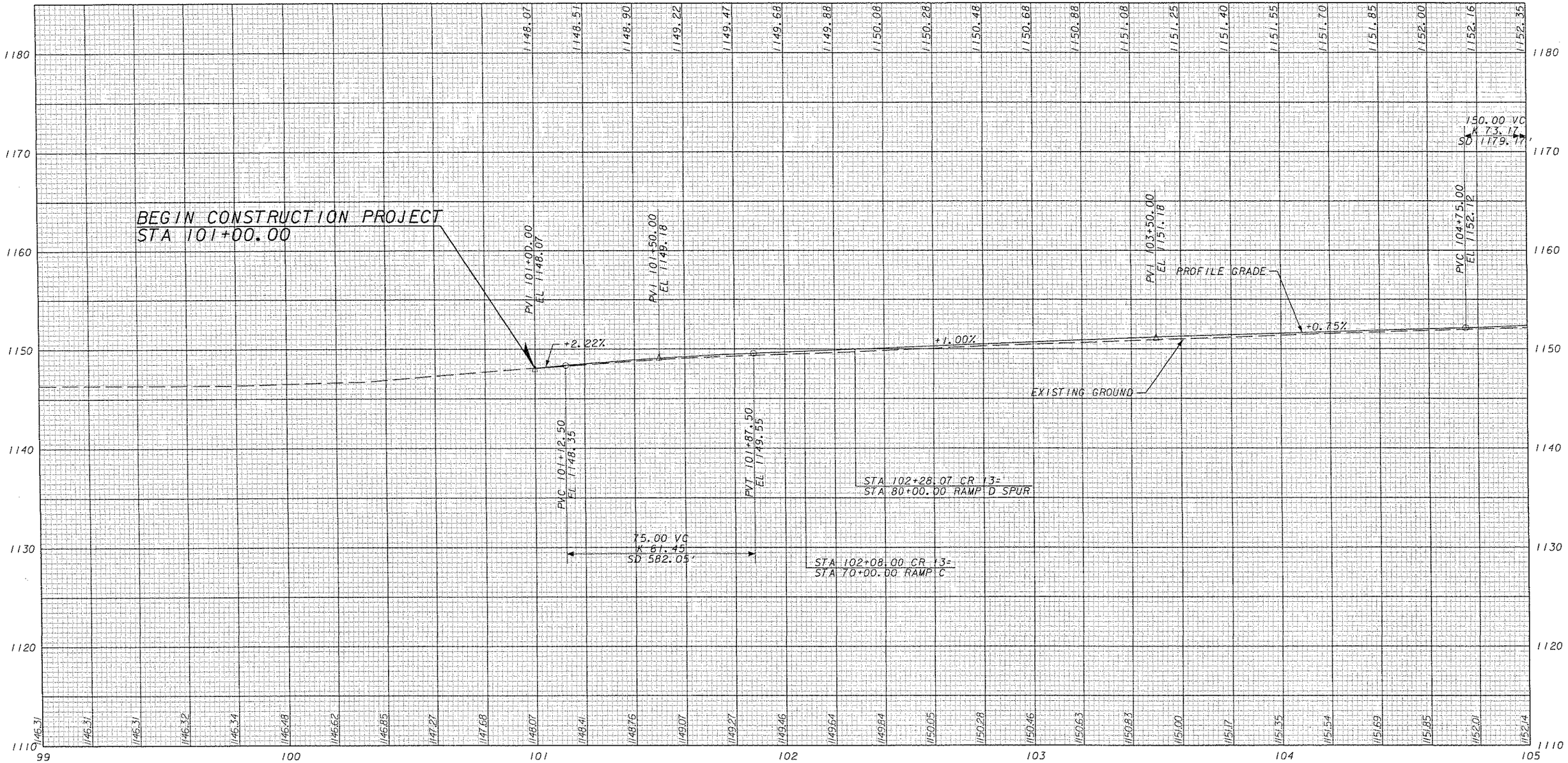

CR 13

SCALES
5 ft.
0 20 ft. 0

REVISION NUMBER	SHEET NUMBER	REVISION	DATE	BY

THE WEST VIRGINIA DEPARTMENT OF TRANSPORTATION
DIVISION OF HIGHWAYS

PROFILE
WV CR 13
STA 99+00 TO 105+00

HDR ENGINEERING, INC.
CONSULTING ENGINEERS
WEIRTON, WV (304) 748-8740

Q.C. CHECKED WWK DATE 12/05 P.M. CHECKED SAB DATE 12/05

DATE: 12/13/2005 AS-

FILE: x:\1436\rdy_pro_3508cBDR.dgn

PUBLIC ROADS DIV.	STATE DIST. NO.	STATE PROJECT NO.	FEDERAL PROJECT NO.	FISCAL YEAR	COUNTY	SHEET NO.	TOTAL SHEETS
W.V.	6	U305-13 -0.02 00	BR-0013 (042)E	2006	BROOKE	44	163

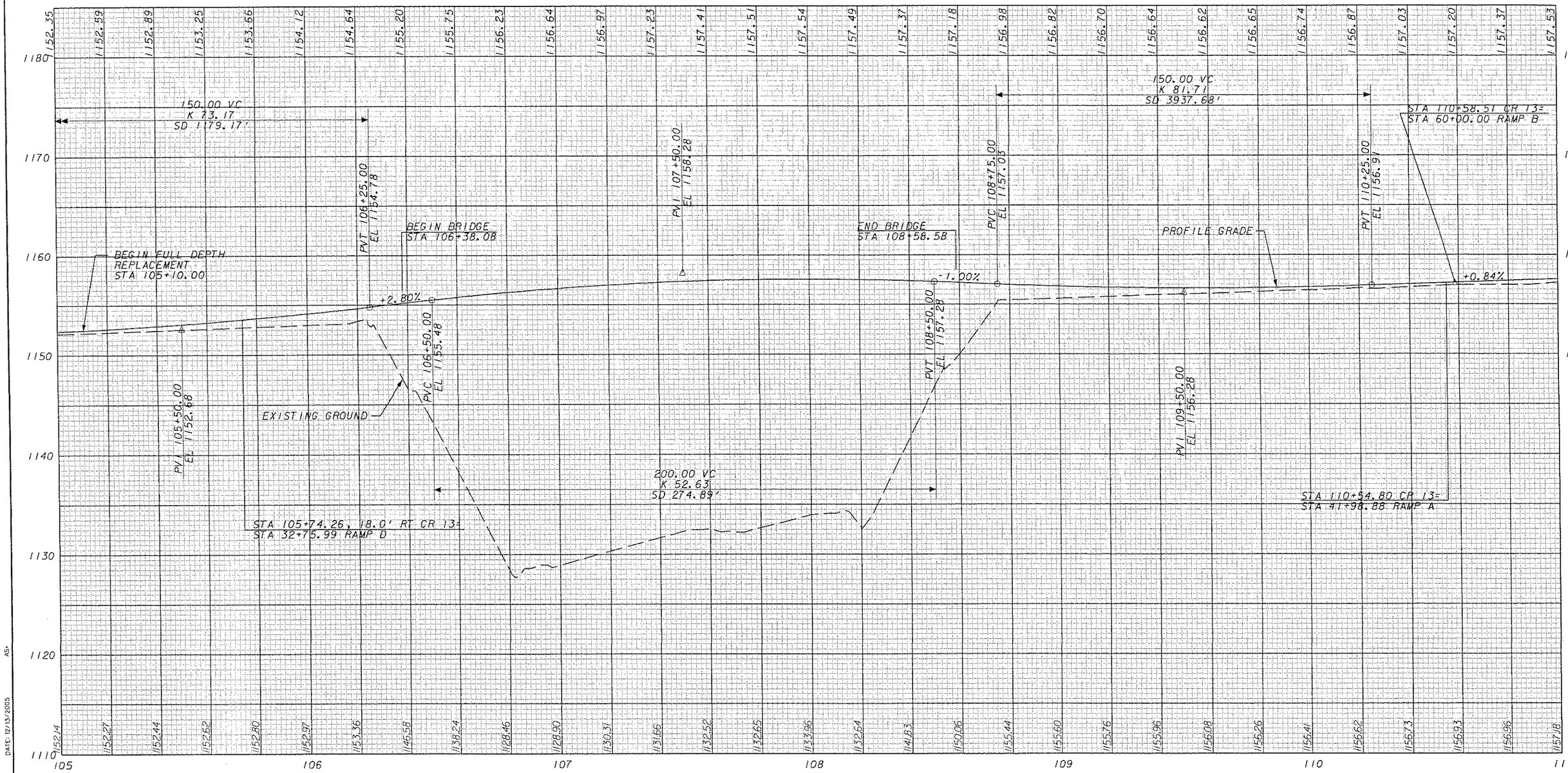

CR 13

SCALES
5 ft.
0 20 ft.
0

REVISION NUMBER	SHEET NUMBER	REVISION	DATE	BY

THE WEST VIRGINIA DEPARTMENT OF TRANSPORTATION
DIVISION OF HIGHWAYS

PROFILE
WV CR 13
STA 105+00 TO 111+00

HDR ENGINEERING, INC.
CONSULTING ENGINEERS
WEIRTON, WV (304) 748-8740

Q.C. CHECKED WWK DATE 12/05 P.M. CHECKED SAB DATE 12/05

DATE: 12/13/2005 AS-

FILE: x:\14361\rdy_pro_3508ss80R.dgn

PUBLIC ROADS DIV.	STATE DIST. NO.	STATE PROJECT NO.	FEDERAL PROJECT NO.	FISCAL YEAR	COUNTY	SHEET NO.	TOTAL SHEETS
W.V.	6	U305-13 -0.02 00	BR-0013 (042)E	2006	BROOKE	45	163

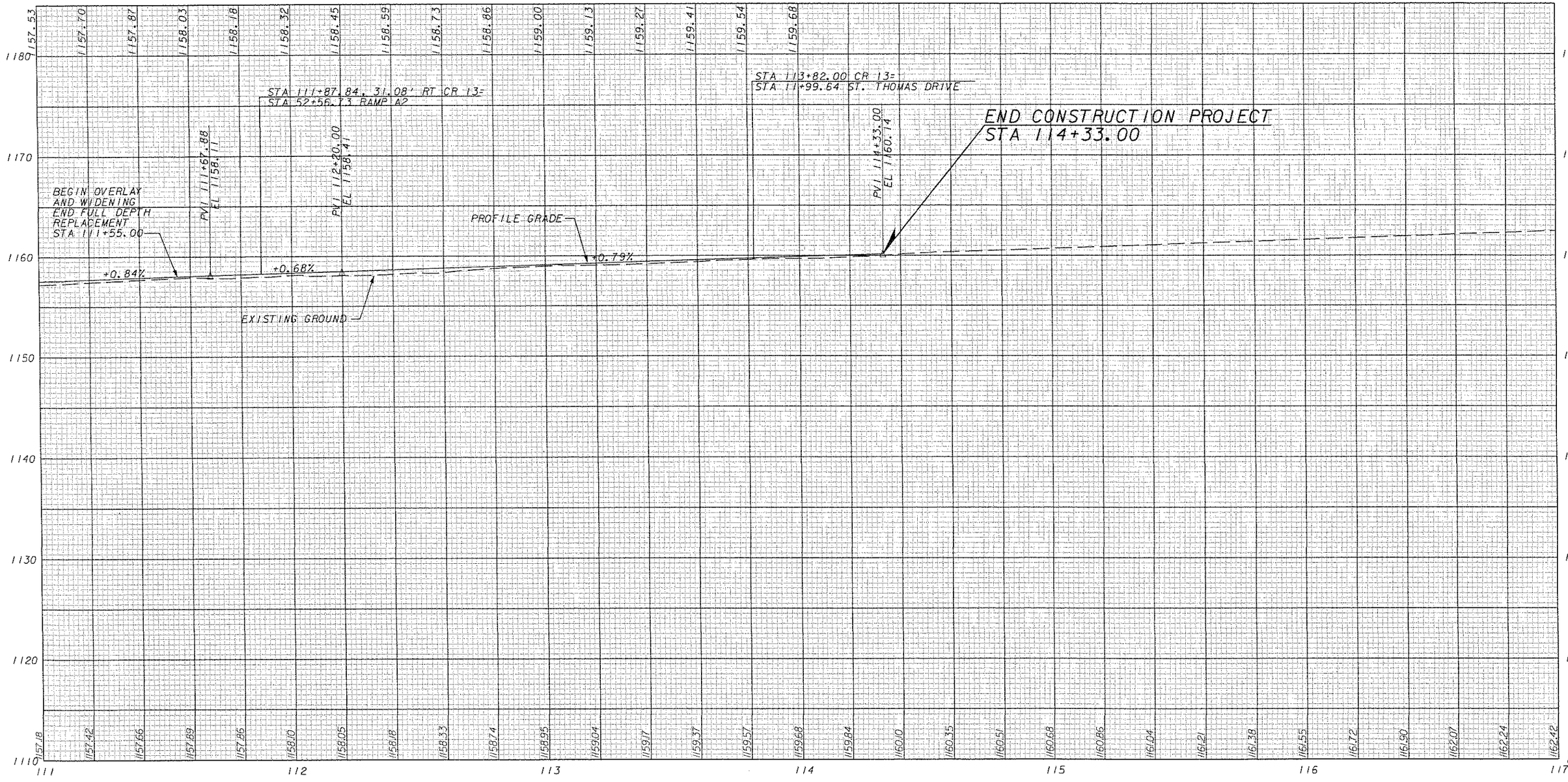

CR 13

SCALES
5 ft.
0 20 ft. 0

REVISION NUMBER	SHEET NUMBER	REVISION	DATE	BY

THE WEST VIRGINIA DEPARTMENT OF TRANSPORTATION
DIVISION OF HIGHWAYS

PROFILE
WV CR 13
STA 111+00 TO 117+00

HDR ENGINEERING, INC.
CONSULTING ENGINEERS
WEIRTON, WV (304) 748-8740

Q.C. CHECKED WWK DATE 12/05 | P.M. CHECKED SAB DATE 12/05

FILE: x:\14361v dy_prg_3508r+BDR.dgn DATE: 12/13/2005 AS-

PUBLIC ROADS DIV.	STATE DIST. NO.	STATE PROJECT NO.	FEDERAL PROJECT NO.	FISCAL YEAR	COUNTY	SHEET NO.	TOTAL SHEETS
W.V.	6	U305-13 -0.02 00	BR-0013 (042)E	2006	BROOKE	46	163

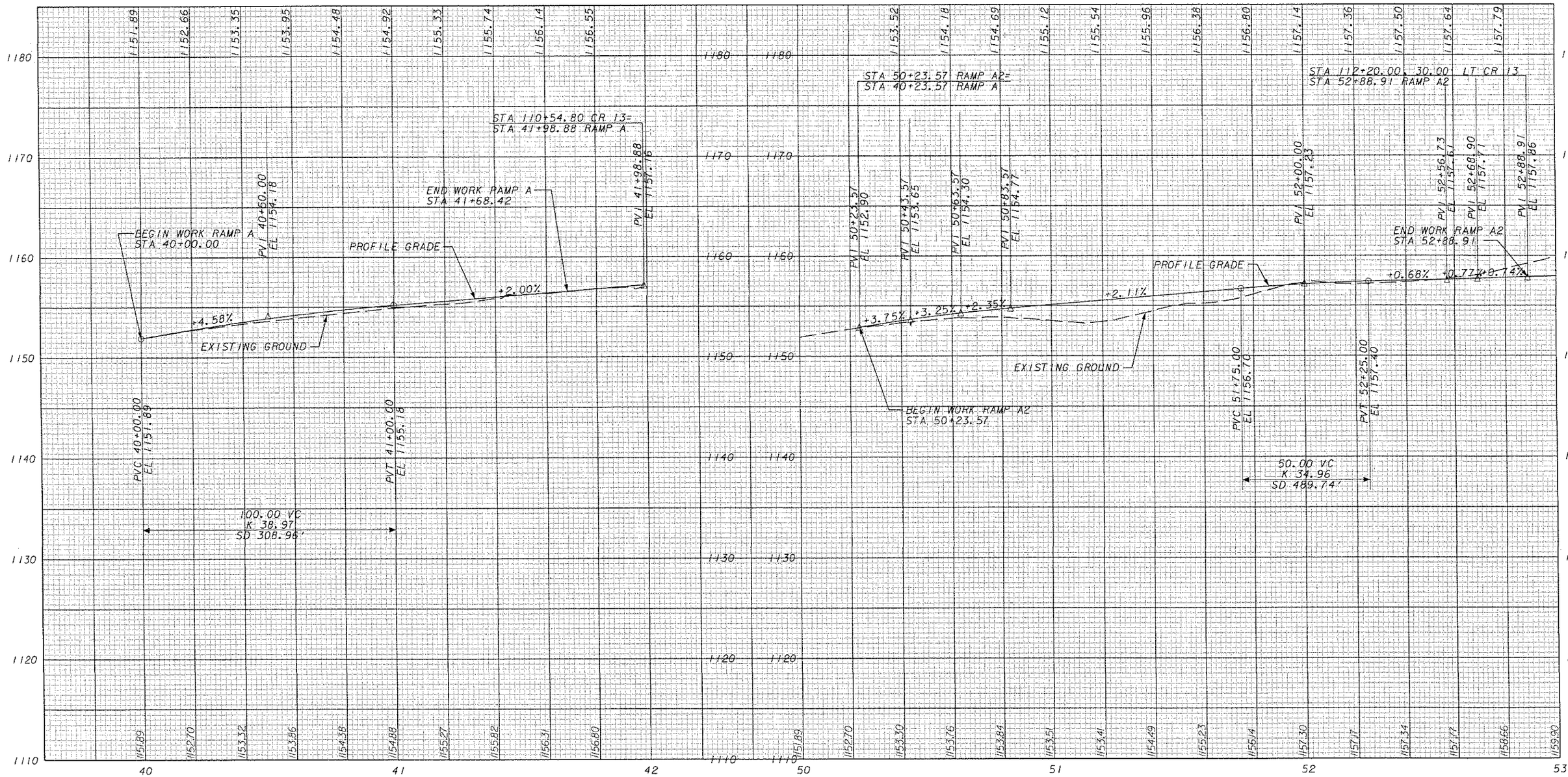

RAMP A

RAMP A2

SCALES

5 ft.

0 20 ft.

0

REVISION NUMBER	SHEET NUMBER	REVISION	DATE	BY

THE WEST VIRGINIA DEPARTMENT OF TRANSPORTATION
DIVISION OF HIGHWAYS

PROFILE
RAMP A AND A2
STA 40+00.00 TO 41+98.88
STA 50+00.00 TO 52+88.91

HDR ENGINEERING, INC.
CONSULTING ENGINEERS
WEIRTON, WV (304) 748-8740

Q.C. CHECKED WWK DATE 12/05 P.M. CHECKED SAB DATE 12/05

DATE: 12/13/2005 AS-

FILE: x:\14361\rdy_pro_\500Es80R.dgn

PUBLIC ROADS DIV.	STATE DIST. NO.	STATE PROJECT NO.	FEDERAL PROJECT NO.	FISCAL YEAR	COUNTY	SHEET NO.	TOTAL SHEETS
W.V.	6	U305-13 -0.02 DD	BR-0013 (042)E	2006	BROOKE	47	163

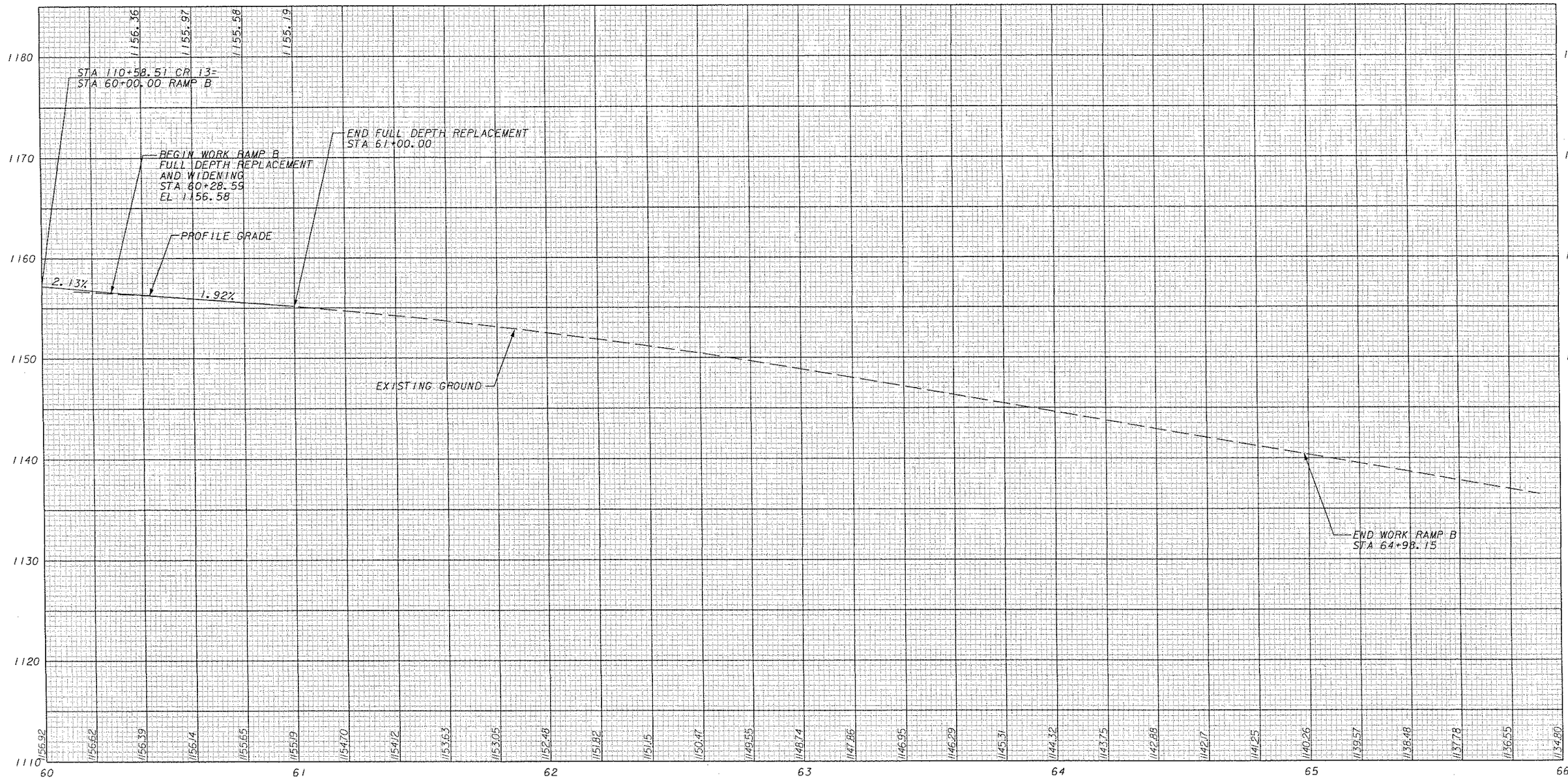

RAMP B

SCALES
5 ft.
0 20 ft. 0

REVISION NUMBER	SHEET NUMBER	REVISION	DATE	BY

THE WEST VIRGINIA DEPARTMENT OF TRANSPORTATION
DIVISION OF HIGHWAYS

PROFILE
RAMP B
STA 60+00.00 TO 66+00.00

HDR ENGINEERING, INC.
CONSULTING ENGINEERS
WEIRTON, WV (304) 748-8740

Q.C. CHECKED WWK DATE 12/05 | P.M. CHECKED SAB DATE 12/05

FILE: x:\14361\rdy_pro_350BcsBDR.dgn DATE: 12/13/2005 AS-

PUBLIC ROADS DIV.	STATE DIST. NO.	STATE PROJECT NO.	FEDERAL PROJECT NO.	FISCAL YEAR	COUNTY	SHEET NO.	TOTAL SHEETS
W.V.	6	U305-13 -0.02 00	BR-0013 (042)E	2006	BROOKE	48	163

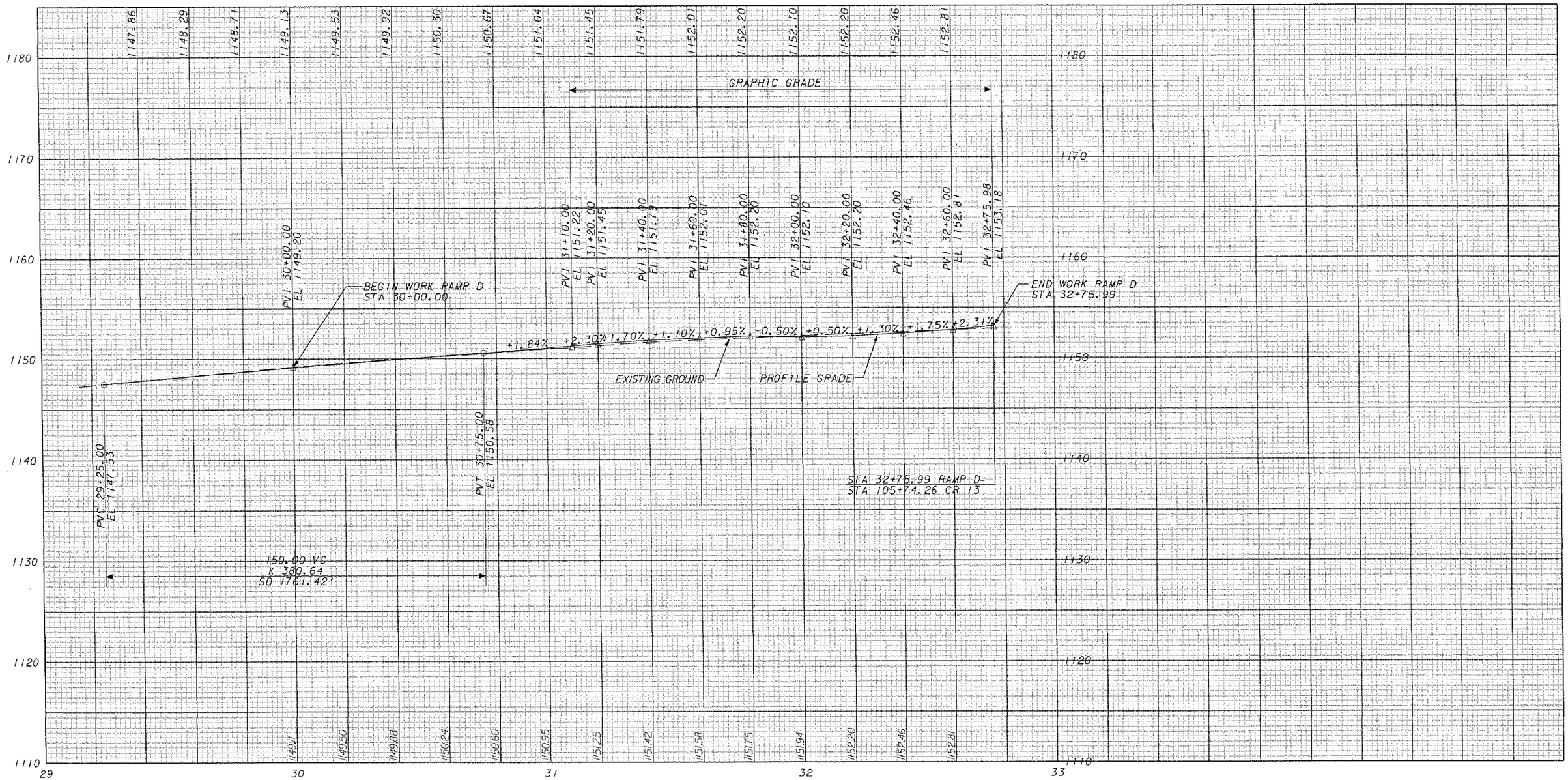

RAMP D

SCALES
5 ft.
0
20 ft.
0

REVISION NUMBER	SHEET NUMBER	REVISION	DATE	BY

THE WEST VIRGINIA DEPARTMENT OF TRANSPORTATION
DIVISION OF HIGHWAYS

PROFILE
RAMP D
STA 30+00.00 TO 32+75.99

HDR ENGINEERING, INC.
CONSULTING ENGINEERS
WEIRTON, WV (304) 748-8740

Q.C. CHECKED WWK DATE 12/05 | P.M. CHECKED SAB DATE 12/05

AS-
DATE: 12/13/2005
FILE: x:\14361\rdy_pro_U305Bc6BDR.dgn

PUBLIC ROADS DIV.	STATE DIST. NO.	STATE PROJECT NO.	FEDERAL PROJECT NO.	FISCAL YEAR	COUNTY	SHEET NO.	TOTAL SHEETS
W.V.	6	U305-13 -0.02 00	BR-0013 (042)E	2006	BROOKE	49	163

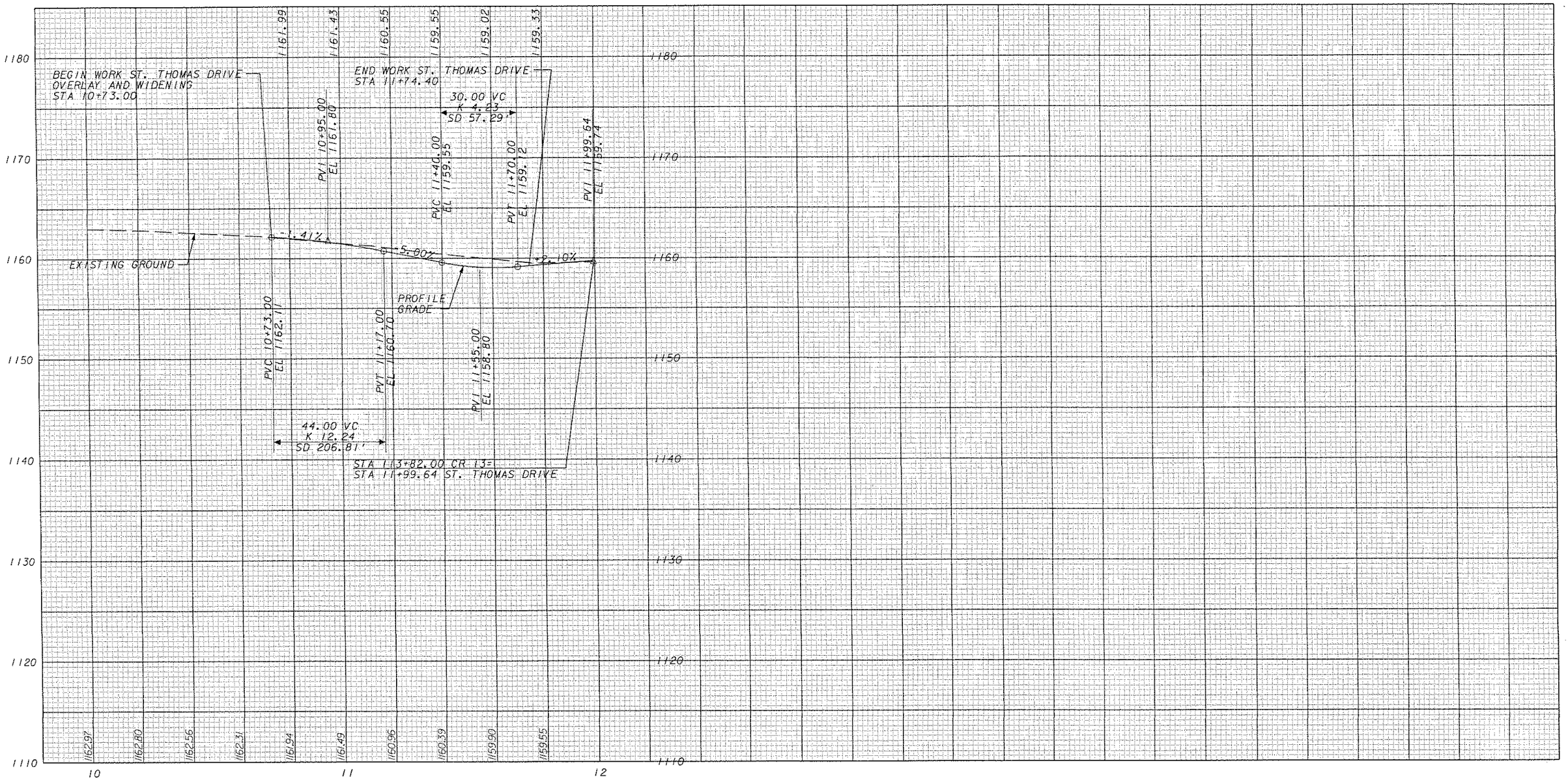

ST. THOMAS DRIVE

SCALES
5 ft.
0 20 ft. 0

REVISION NUMBER	SHEET NUMBER	REVISION	DATE	BY

THE WEST VIRGINIA DEPARTMENT OF TRANSPORTATION
DIVISION OF HIGHWAYS

PROFILE
ST. THOMAS DRIVE
STA 10+00 TO 12+00

HDR ENGINEERING, INC.
CONSULTING ENGINEERS
WEIRTON, WV (304) 748-8740

Q.C. CHECKED WWK DATE 12/05 P.M. CHECKED SAB DATE 12/05

AS-
DATE: 12/13/2005
FILE: x:\14361rdy_pro_350BeaBDR.dgn

PUBLIC ROADS DIV.	STATE DIST. NO.	STATE PROJECT NO.	FEDERAL PROJECT NO.	FISCAL YEAR	COUNTY	SHEET NO.	TOTAL SHEETS
W.V.	6	U305-13-0.02 00	BR-0013 (042)E	2006	BROOKE	50	163

SUMMARY OF QUANTITIES

ITEM NO.	DESCRIPTION	QUANTITY UNIT	QUANTITY TOTAL
657006-001	S4x7.7, A-441 SUPPORT, GALVANIZED	LF	36
657006-005	W6x12, A-441 SUPPORT, GALVANIZED	LF	137
657010-001	3.00 LB CHANNEL POST	LF	280
657017-001	CLASS B CONCRETE FOOTING, REINFORCED, ROADSIDE	CY	4.8
657018-001	POST REMOVAL	EA	24
658001-001	CLASS B CONCRETE FOOTING, REINFORCED, OVERHEAD	CY	15.9
658002-001	OVERHEAD SIGN, STEEL-ALUMINUM COMBINATION 01 *	EA	1
658003-001	OVERHEAD SIGN, GALVANIZED STEEL 02 *	EA	1
659001-001	SIGN LIGHTING, TYPE 3 01 *	LS	1
659001-001	SIGN LIGHTING, TYPE 3 02 *	LS	1
661001-001	0.080 IN FLAT SHEET SIGN	SF	190
661002-001	EXTRUDED PANEL SIGN	SF	137
661004-001	DELINEATOR, REFLEX REFLECTOR, SINGLE WHITE	EA	4
661006-001	DELINEATOR, NINE PER UNIT, YELLOW	UN	1
661008-001	DELINEATOR BRACKET, TYPE C	EA	4
661011-001	INSTALLATION OF REUSABLE SIGN	EA	13
661013-001	PLASTIC DELINEATOR POST, WHITE	EA	39
661013-001	PLASTIC DELINEATOR POST, YELLOW	EA	8
663001-004	EDGE LINE, TYPE II WHITE	LF	4,000
663001-004	EDGE LINE, TYPE II YELLOW	LF	875
663002-005	LANE LINE OR CENTERLINE, TYPE II WHITE	LF	425
663002-005	LANE LINE OR CENTERLINE, TYPE II YELLOW	LF	30
663003-005	BARRIER LINE, TYPE II	LF	2,800
663004-004	CHANNELIZING LINE, TYPE II WHITE (8")	LF	715
663005-010	STOP LINE, TYPE V (24")	LF	140
663007-010	STRIPE, TYPE V YELLOW (12")	LF	360
663007-010	STRIPE, TYPE V WHITE (12")	LF	475
663008-005	YIELD TRIANGLE, TYPE V	EA	10
663010-010	LANE ARROW, TYPE V	EA	11
663011-010	LANE LETTER, TYPE V	EA	20
	* FOR RELOCATION AND REWIRING ONLY		

SIGNING GENERAL NOTES

GOVERNING SPECIFICATIONS

THE WEST VIRGINIA DEPARTMENT OF TRANSPORTATION, DIVISION OF HIGHWAYS STANDARD SPECIFICATIONS, ROADS AND BRIDGES, ADOPTED JANUARY 1, 2000 AS AMENDED BY THE WEST VIRGINIA DEPARTMENT OF TRANSPORTATION, DIVISION OF HIGHWAYS SUPPLEMENTAL SPECIFICATIONS DATED JANUARY 1, 2003, THE CONTRACT DOCUMENTS AND THE CONTRACT PLANS ARE THE GOVERNING PROVISIONS APPLICABLE TO THIS PROJECT.

CONSTRUCTION LAYOUT STAKES

CONSTRUCTION LAYOUT STAKES FOR SIGNING WILL BE INCIDENTAL TO THE CONTRACT AMOUNT BID AND INCLUDED IN THE VARIOUS SIGNING ITEMS.

CORNERS

CORNERS OF ALL SHEET ALUMINUM SIGNS SHALL BE ROUNDED; HOWEVER, CORNERS OF ALUMINUM SIGN FACES (EXTRUDED OR OVERLAY) SHALL NOT BE ROUNDED. FABRICATED SIGNS WITH DIRECT APPLIED COPY (BLUE, GREEN, OR BROWN BACKGROUND) SHALL HAVE A ½ INCH CORNER RADIUS ON THE ALUMINUM BLANK.

BOLT TIGHTENING

A CALIBRATED DEVICE ACCEPTABLE TO THE ENGINEER SHALL BE PROVIDED BY THE CONTRACTOR TO INSURE THE STIPULATED TORQUE AND/OR TENSION THAT IS SET FORTH BY THE PLANS.

SIGN FABRICATION

ALL SIGNS SHALL BE FABRICATED IN ACCORDANCE WITH THE LATEST EDITION OF THE UNITED STATES DEPARTMENT OF TRANSPORTATION, FEDERAL HIGHWAY ADMINISTRATION "STANDARD HIGHWAY SIGNS". ANY SIGN FABRICATION DETAIL NOT REPRESENTED IN THAT PUBLICATION SHALL BE FABRICATED IN ACCORDANCE WITH THE WEST VIRGINIA DEPARTMENT OF TRANSPORTATION, DIVISION OF HIGHWAYS "SIGN FABRICATION MANUAL", "DESIGN GUIDE FOR SIGNING", "STANDARD SPECIFICATIONS ROADS AND BRIDGES", LATEST EDITIONS.

SIGN PUNCHING

SIGNS 60 INCHES OR MORE IN HEIGHT SHALL HAVE THREE RIBS. THE THIRD RIB SHALL BE MOUNTED ALONG THE HORIZONTAL CENTERLINE AND IN LINE WITH THE OTHER SETS OF HOLES. SIGNS SHALL BE PUNCHED IN ACCORDANCE WITH THE SPECIAL DETAILS IN THE CONTRACT PLANS.

REFLECTIVE SHEETING

ALL BACKGROUND MATERIAL FOR SIGNS IN THIS PROJECT SHALL BE REFLECTIVE SHEETING, ASTM TYPE III, UNLESS OTHERWISE NOTED IN THE PLANS. DEMOUNTABLE WHITE LEGEND AND BORDER, AND SHIELDS FOR GUIDE SIGNS SHALL BE ASTM TYPE IX REFLECTIVE SHEETING. ALL SHEETING USED IN THIS PROJECT MUST HAVE SUCCESSFULLY COMPLETED 3 YEARS IN THE AASHTO/NTPEP OUTDOOR REFLECTIVE SHEETING PERFORMANCE TESTING PROGRAM.

DEMOUNTABLE COPY AND BORDERS

DEMOUNTABLE COPY AND BORDERS SHALL NOT BE POSITIONED ON ANY SIGN FACE BY MEANS OF TAPE OR GLUE. ALL DEMOUNTABLE COPY AND BORDERS SHALL BE ATTACHED TO THE SIGN FACE USING APPROVED RIVETS ONLY.

THE FOLLOWING TYPE OF DEMOUNTABLE COPY SHALL BE USED IN THIS PROJECT:
COPY FABRICATED FROM 0.080 INCH THICK ALUMINUM SHEETS CONFORMING TO ASTM B 209 ALLOY 6061-T6 OR 5052-H38 MEETING THE REQUIREMENTS OF SECTION 661 AND COVERED WITH ASTM TYPE IX REFLECTIVE SHEETING CONFORMING TO SECTION 715.9.2.3 OF THE WEST VIRGINIA DIVISION OF HIGHWAYS STANDARD SPECIFICATIONS ROADS AND BRIDGES, LATEST EDITION.

BREAKAWAY SUPPORTS S4X7.7

ON STANDARD DETAIL TE1-3B DELETE DETAIL "A". ON ALL S-SHAPES THE SAW-CUT SHALL BE CUT THE FULL LENGTH OF THE COLUMN. HINGE PLATES SHALL BE FABRICATED AS SHOWN ON THE "HINGE PLATE DETAIL FOR W-SHAPES" SHOWN ON STANDARD DETAILS TE1-3A AND TE1-3B.

IDENTIFICATION CODES FOR SCREENED SIGNS

AN IDENTIFICATION CODE SHALL BE PLACED ON ALL SIGNS WITH SCREENED MESSAGES THAT ARE MANUFACTURED FOR THE DIVISION OF HIGHWAYS. THE CODE SHALL CONSIST OF THE LETTERS "WVDH" WITH AN ABBREVIATED FORM OF MONTH AND YEAR OF FABRICATION DIRECTLY BELOW. IT SHALL ALSO INCLUDE AN ABBREVIATED NAME OF THE SHEETING MANUFACTURER AND THE INK MANUFACTURER.

EXAMPLE: WVDH 3M
8/04 A

EACH LINE OF LETTERS OR NUMERALS SHALL BE ¼ INCH HIGH, NO GREATER THAN ONE INCH IN LENGTH AND OF THE SAME COLOR AS THAT BEING SCREENED. THE CODE SHALL BE PLACED ON THE LOWER RIGHT HAND EDGE OF THE SIGN. IF THE SIGN HAS BOTH BORDER AND MARGIN, THE IDENTIFICATION CODE SHALL BE WITHIN THE BORDER, BUT MAY EXTEND INTO THE MARGIN AND/OR SIGN AREA. IF THE SIGN HAS BORDER ONLY, THE CODE SHALL BE WITHIN THE BORDER, BUT MAY EXTEND INTO THE SIGN AREA.

A SIGN IDENTIFICATION DECAL SHALL BE APPLIED TO THE LOWER RIGHT HAND CORNER (FACING BACK OF SIGN) OF ALL FLAT SHEET SIGNS STATING THE MONTH AND YEAR OF INSTALLATION.

EXTRUDED PANEL SIGNS AND FABRICATED FLAT SHEET SIGNS WITH DIRECT APPLIED COPY SHALL HAVE TWO SEPARATE DECALS APPLIED TO THE BACK BOTTOM RIGHT HAND CORNER (FACING BACK OF SIGN). ONE STATING THE MONTH AND YEAR OF INSTALLATION AND ONE STATING THE MANUFACTURER OF THE SHEETING. SEE CONTRACT PLANS FOR DECAL DETAILS.

HARDWARE

ON ALL FLAT SHEET SIGNS THE MOUNTING HARDWARE SHALL BE OF A VANDAL-RESISTANT DESIGN. THE FABRICATOR SHALL SUPPLY FIVE (5) PIECES OF MATERIAL TO THE DIVISION OF HIGHWAYS FOR TESTING PRIOR TO THE MANUFACTURE OF THE SIGNS. THE DIVISION OF HIGHWAYS ALSO RESERVES THE RIGHT TO RANDOM TEST THIS MATERIAL AFTER SHIPMENT TO THE PROJECT.

BOLT-5/16" x 3" x 18. BOLT HEAD TO BE ROUND, DOME WITH ONE-WAY SLOT. BOLT SHALL HAVE A 2 INCH MINIMUM THREAD AND BE MANUFACTURED OF STEEL IN ACCORDANCE WITH ASTM A-307.

NUT-CONE SHAPED WITH HEX SHAPED DRIVE HEAD DESIGNED TO SHEAR OFF AT A PREDETERMINED TORQUE OF NO LESS THAN 4 FT/LBS AND NO GREATER THAN 8 FT/LBS WHEN USING MATERIALS, CONTROL, SOILS AND TESTING MP NO. 661.20.00. NUT SHALL BE MANUFACTURED OF STEEL IN ACCORDANCE WITH ASTM A-563, GRADE A.

COATING ON BOTH NUT AND BOLT SHALL BE IN ACCORDANCE WITH ASTM B-766, CLASS 8, TYPE 2 (CADMIUM DICHROMATE). THREAD FIT ON NUT AND BOLT SHALL ALLOW WORKERS TO ASSEMBLE HARDWARE WITH THEIR FINGERS BEFORE TIGHTENING.

POST CLIPS

ALL POST CLIPS SHALL BE PROVIDED WITH A STAINLESS STEEL BOLT WHICH SHALL CONFORM TO STAINLESS STEEL ALLOY 304, ASTM A 193, GRADE B8 OR ASTM A 194, GRADE 8. POST CLIP BOLTS SHALL CONFORM TO THE DIMENSIONS SHOWN ON STANDARD DETAIL TE7-1. HEX LOCK NUTS SHALL CONFORM TO STAINLESS STEEL ALLOY 303, ASTM A 193, GRADE B 8F OR ASTM A 194, GRADE 8F. POST CLIP WASHERS SHALL CONFORM TO STAINLESS STEEL ALLOY 302, ASTM A276. WASHER DIMENSIONS ARE ¾" DIA. X .062" WITH .406" DIA. HOLE.

OVERHEAD SIGNS

ALL OVERHEAD SIGNS ON THIS PROJECT SHALL COMPLY WITH THE 1994 AASHTO "STANDARD SPECIFICATIONS FOR STRUCTURAL SUPPORTS FOR HIGHWAY SIGNS, LUMINAIRES, AND TRAFFIC SIGNALS."

EXTRUDED RIBS

EACH FLAT SHEET SIGN ATTACHED TO BREAKAWAY SUPPORTS SHALL HAVE TWO EXTRUDED RIBS PER STANDARD DETAIL TP-A REGARDLESS OF SIGN SIZE, SHAPE, OR NUMBER OF SIGNS IN THE SIGN ASSEMBLY.

POST REMOVAL - ITEM 657018-001

POST REMOVAL FOR GROUND MOUNTED SIGNS ON EXISTING BREAKAWAY SUPPORTS SHALL INCLUDE THE CUTTING OFF OF THE EXISTING STUB(S) TO A MINIMUM OF 6" BELOW GROUND AND THE RESTORATION OF THE GROUND TO ITS ORIGINAL CONDITION.

PAVEMENT MARKING GENERAL NOTES

1. ALL 4" SOLID WHITE OR SOLID YELLOW EDGE LINES, LANE LINES, CENTERLINES AND BARRIER LINES SHALL BE TYPE II PAVEMENT MARKING MATERIAL.
2. EDGE LINES SHALL BE CENTERED 6" FROM EDGE OF PAVEMENT OR LANE AS APPLICABLE.
3. ALL MARKINGS SHALL BE CONTINUOUS AND CONSISTENT WITH THE EXISTING MARKINGS WHERE THEY JOIN.
4. NO MARKINGS SHALL BE PLACED ON EXPANSION JOINTS ON STRUCTURES OR ON LONGITUDINAL CONSTRUCTION JOINTS UNLESS SO DIRECTED BY THE ENGINEER.

SIGN IDENTIFICATION DECAL

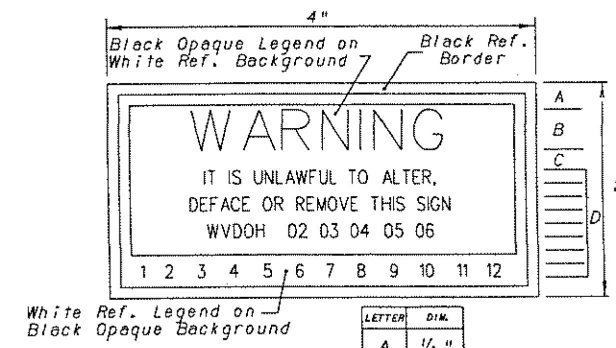

LETTER	DIM.
A	¼"
B	⅜"
C	3/16"
D	⅛"

DECALS FOR FLAT SHEET AND EXTRUDED PANEL SIGNS WILL BE PROVIDED BY THE SIGN FABRICATOR. THE YEAR AND MONTH OF INSTALLATION ARE TO BE PUNCHED OUT BY THE CONTRACTOR. SEE SIGNING GENERAL NOTES.

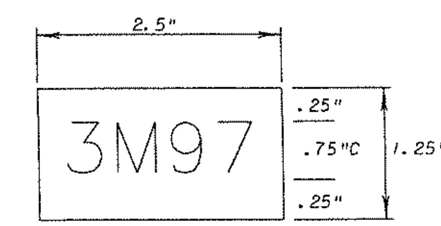

BLACK NON. REF. LEGEND, NO BORDER
WHITE REF. SHEETING BACKGROUND

S-1

THE WEST VIRGINIA DEPARTMENT OF TRANSPORTATION
DIVISION OF HIGHWAYS

GENERAL NOTES AND SUMMARY OF QUANTITIES

HDR ENGINEERING, INC.
CONSULTING ENGINEERS
WEIRTON, WV (304) 748-8740

Q.C. CHECKED JBL DATE 12/05 P.M. CHECKED SAB DATE 12/05

REVISION NUMBER	SHEET NUMBER	REVISION	DATE	BY

DATE: 12/13/2005
FILE: x:\14361\rl_sgn_350801.dgn

PUBLIC ROADS DIV.	STATE DIST. NO.	STATE PROJECT NO.	FEDERAL PROJECT NO.	FISCAL YEAR	COUNTY	SHEET NO.	TOTAL SHEETS
W.V.	6	U305-13 -0.02 00	BR-0013 (042)E	2006	BROOKE	51	163

ASSEMBLY NUMBER	SIGN NUMBER	PROPOSED LOCATION	EXISTING LOCATION	LAYOUT SHT. NO.	FABRICATION SHT. NO.	SIGN DISPOSITION	LENGTH	HEIGHT	FLAT SHEET 0.080 SF	FLAT SHEET 0.080 OVERLAY SF	EXTRUDED PANEL SF	INSTALL REUSED SIGN	U-CHANNEL 2.00 #/FT	U-CHANNEL 3.00 #/FT	U-CHANNEL 4.00 BB #/FT	U-CHANNEL 6.00 BB #/FT	POST REMOVAL	REUSE EX. SPTS.	A-572 GRADE 50 S4x7.7 LF	A-572 GRADE 50 W6x12 LF	A-572 GRADE 50 W8x18 LF	A-572 GRADE 50 W10x22 LF	FOOTER DIA. FT	FOOTER DEPTH FT	CLASS B CONC. REIN. CY
1	AE-1	101+00 RT		S-4	S-6	NEW	10.5	4.0			42.00						2			18.0			2.5	4.0	0.7
	M3-4			S-4		NEW	2.0	1.0	2.00											20.0			2.5	4.0	0.7
	M1-4			S-4		NEW	2.0	2.0	4.00																
	M6-3			S-4		NEW	1.75	1.25	2.19																
	M3-2			S-4		NEW	2.0	1.0	2.00																
	M1-4			S-4		NEW	2.0	2.0	4.00																
	M6-1			S-4		NEW	1.75	1.25	2.19																
2	R3-9d	101+50 RT		S-4		R	2.0	4.0				1		15.5			1								
3	M3-2	101+75 RT		S-4		NEW	2.0	1.0	2.00					16.0			1								
	M1-4			S-4		NEW	2.0	2.0	4.00																
	M6-2R			S-4		NEW	1.75	1.25	2.19																
4	R4-7	70+75		S-4		NEW	2.0	2.5	5.00					15.5											
	XR-9			S-4		NEW	1.5	1.5	SEE SHEET S-3 FOR DELINEATOR QUANTITIES																
5	R3-9c	101+50 LT		S-4		R	2.0	4.0				1		15.5			1								
6	AE-2	102+50 LT		S-4	S-6	NEW	7.0	7.0			49.00						2		16.0				1.5	4.0	0.3
																			20.0				1.5	4.0	0.3
7	R1-1	102+60 RT		S-4		NEW	3.0	3.0	9.00					14.5			1								
	R5-1			S-4		NEW	3.0	3.0	9.00																
8	R1-2	104+10 RT		S-4		NEW	3.0	3.0	9.00					14.5			1								
	R5-1			S-4		NEW	3.0	3.0	9.00																
9	R3-7L	105+00 LT		S-4		NEW	2.5	2.5	6.25					14.5			1								
10	R2-1	106+00 RT		S-4		NEW	2.0	2.5	5.00					14.5			1								
11	-	SEE PLANS		S-4		R	7.5	2.0				1						1	RELOCATED HALF SPAN OVERHEAD SIGN						
				S-4		R	16.0	10.0				1													
				S-4		R	12.5	7.0				1													
				S-4		R	7.5	2.0				1													
				S-4		R	24.0	8.0				1													
12	-	109+70 LT		S-4		R	15.5	11.0				1						1	RELOCATED CANTILEVER SIGN						
				S-4		R	15.5	11.0				1													
13	R5-5f	50+30 LT		S-4		NEW	3.5	3.0	10.50					14.5			1								
14	R1-2	51+00 LT		S-4		NEW	3.0	3.0	9.00					14.5			1								
15	R1-1	110+00 RT		S-4		NEW	3.0	3.0	9.00					14.5			1								
	R5-1			S-4		NEW	3.0	3.0	9.00					14.5											
	R6-1L			S-4		NEW	3.0	1.0	3.00																
	R6-1R			S-4		NEW	3.0	1.0	3.00																
16	R5-1a	63+25 RT		S-4		NEW	3.0	2.0	6.00					14.0			1								
16A	LOGO	64+30 RT		S-4		R	5.0	13.0				1					2			20.0			2.5	4.0	0.7
																				20.0			2.5	4.0	0.7
17	R5-1a	63+25 LT		S-4		NEW	3.0	2.0	6.00					14.0			1								
18	R1-1	110+80 RT		S-4		NEW	3.0	3.0	9.00					14.5			1								
	R5-1			S-4		NEW	3.0	3.0	9.00					14.5											
	R6-1L			S-4		NEW	3.0	1.0	3.00																
	R6-1R			S-4		NEW	3.0	1.0	3.00																
19	AE-3	101+00 RT		S-4	S-6	NEW	11.5	4.0			46.00						3			18.0			2.5	4.0	0.7
	M3-2			S-4		NEW	2.0	1.0	2.00											20.0			2.5	4.0	0.7
	M1-4			S-4		NEW	2.0	2.0	4.00																
	M6-3			S-4		NEW	1.75	1.25	2.19																
	M5-3L			S-4		NEW	1.75	1.25	2.19																
	M3-4			S-4		NEW	2.0	1.0	2.00																
	M1-4			S-4		NEW	2.0	2.0	4.00																
	M6-1R			S-4		NEW	1.75	1.25	2.19																
20	R2-1	113+00 RT		S-4		NEW	2.0	2.5	5.00					14.5			1								
	R2-8			S-4		NEW	2.0	1.25	2.50																
21	R2-1	113+00 LT		S-4		NEW	2.0	2.5	5.00					14.5											
	R2-8			S-4		NEW	2.0	1.25	2.50																
22	-	113+00 LT		S-4		R	2.5	2.5				1		15.5			1								
	-			S-4		R	1.5	0.5				1													
	-			S-4		R	2.0	0.67				1													
								TOTALS	189.89		137.00	13		280.0			24		36.0	116.0					4.8

SIGN DISPOSITION:

NEW - NEW SIGN ON NEW SUPPORT
R - REUSE EXISTING SIGN WITH NEW SUPPORT

REVISION NUMBER	SHEET NUMBER	REVISION	DATE	BY

S-2

THE WEST VIRGINIA DEPARTMENT OF TRANSPORTATION
DIVISION OF HIGHWAYS

SIGNING QUANTITIES

HDR ENGINEERING, INC.
CONSULTING ENGINEERS
WEIRTON, WV (304) 748-8740

O.C. CHECKED JBI DATE 12/05 P.M. CHECKED SAB DATE 12/05

DATE: 12/13/2005

FILE: k:\1436\tr1_sgn_350802.dgn

PUBLIC ROADS DIV.	STATE DIST. NO.	STATE PROJECT NO.	FEDERAL PROJECT NO.	FISCAL YEAR	COUNTY	SHEET NO.	TOTAL SHEETS
W.V.	6	U305-13 -0.02 00	BR-0013 10421E	2006	BROOKE	52	163

DELINEATOR QUANTITY

LOCATION	DEGREE OF CURVE SPACING, OR TANGENT	SINGLE WHITE	SINGLE AMBER	AMBER B-1 (PER TE11-5)	PLASTIC WHITE 661013-001	PLASTIC YELLOW 661013-001	XR-3	XR-9	TYPE OF SUPPORT: U-CHANNEL	TYPE "A" BRACKET	TYPE "B" BRACKET	TYPE "C" BRACKET
RAMP D												
29+15 TO 31+00	25.45°					5						
80+75								1				
RAMP B												
60+50 TO 66+00	100' SPACING				6	ALL GUARDRAIL MOUNTED (SEE SPECIAL DETAIL)						
CR 13												
101+00 TO 108+73	100' SPACING	4			11	TWO GUARDRAIL MOUNTED (SEE SPECIAL DETAIL)						4
108+73 TO 114+33	100' SPACING				11	SIX GUARDRAIL MOUNTED (SEE SPECIAL DETAIL)						
RAMP A												
40+00 TO 41+60	100' SPACING				4							
RAMP A2												
50+25 TO 52+50	33.70°				7	3						
	TOTALS	4			39	8		1				4

NOTES:
- MEASUREMENT FOR SPACING OF DELINEATORS SHALL BE TAKEN ON THE EDGE OF ROADWAY NEAREST THE LOCATION OF THE DELINEATORS
- (X) DENOTES THE NUMBER OF DOUBLE WHITE INSTALLATIONS

"SOIL ANCHORED FLEXIBLE DELINEATOR POST" AND "GUARDRAIL MOUNTED FLEXIBLE DELINEATOR POST", EACH

PAYMENT WILL BE MADE AT THE CONTRACT UNIT PRICE PER INSTALLATION FOR SOIL ANCHORED FLEXIBLE DELINEATOR POST OR GUARDRAIL MOUNTED FLEXIBLE DELINEATOR POST, HARDWARE, AND LABOR. THE CONSTRUCTION DETAILS, MATERIAL, AND LABOR WILL BE IN ACCORDANCE WITH THE APPLICABLE SECTIONS OF STANDARD SPECIFICATION SECTION 657 AND 661 AND THE STANDARD DETAILS BOOK, VOLUME II - SIGNS, SIGNALS, LIGHTING, AND MARKING.

THE SOIL ANCHORED FLEXIBLE DELINEATOR POST OR GUARDRAIL MOUNTED FLEXIBLE DELINEATOR POST INSTALLED SHALL BE A MODEL POST FROM THE LATEST APPROVED PRODUCTS LISTING (APL) FOR SUCH. THE POSTS SUPPLIED SHALL ALSO MEET THE REQUIREMENTS NOTED ON THE APL. UNLESS OTHERWISE NOTED, COLOR SHALL BE EITHER WHITE WITH WHITE SHEETING ON THE FRONT OR YELLOW WITH FLUORESCENT-YELLOW SHEETING ON THE FRONT.

"SURFACE MOUNTED FLEXIBLE TUBULAR MARKERS" (PER EACH)

PAYMENT WILL BE MADE AT THE CONTRACT UNIT PRICE PER INSTALLATION FOR SURFACE MOUNTED FLEXIBLE TUBULAR MARKERS, HARDWARE, AND LABOR. THE CONSTRUCTION DETAILS, MATERIAL, AND LABOR WILL BE IN ACCORDANCE WITH THE APPLICABLE SECTIONS OF STANDARD SPECIFICATION SECTION 657 AND 661 AND THE STANDARD DETAILS BOOK, VOLUME II - SIGNS, SIGNALS, LIGHTING, AND MARKING.

THE SURFACE MOUNTED FLEXIBLE TUBULAR MARKER INSTALLED SHALL BE A MODEL POST FROM THE LATEST APPROVED PRODUCTS LISTING (APL) FOR SUCH. THE POSTS SUPPLIED SHALL ALSO MEET THE REQUIREMENTS NOTED ON THE APL. UNLESS OTHERWISE NOTED, COLOR SHALL BE EITHER WHITE POST WITH WHITE SHEETING OR YELLOW POST WITH YELLOW SHEETING.

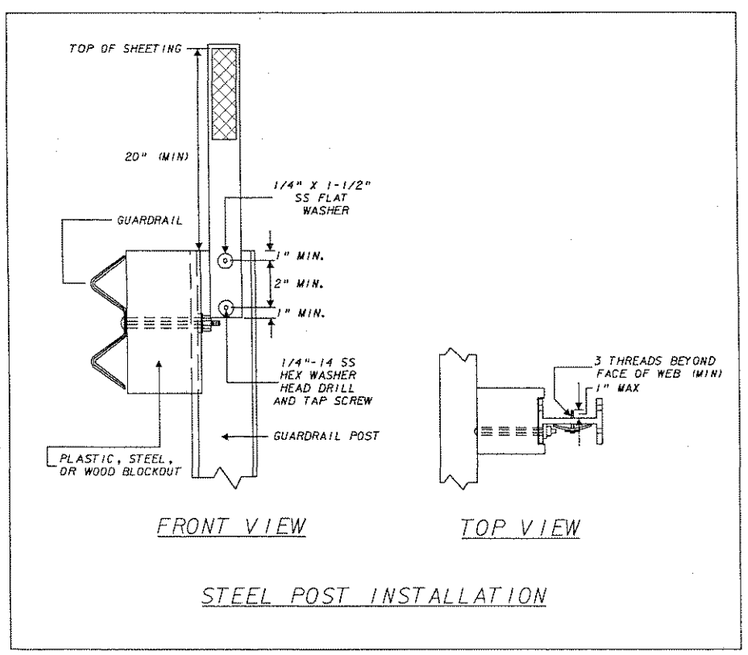

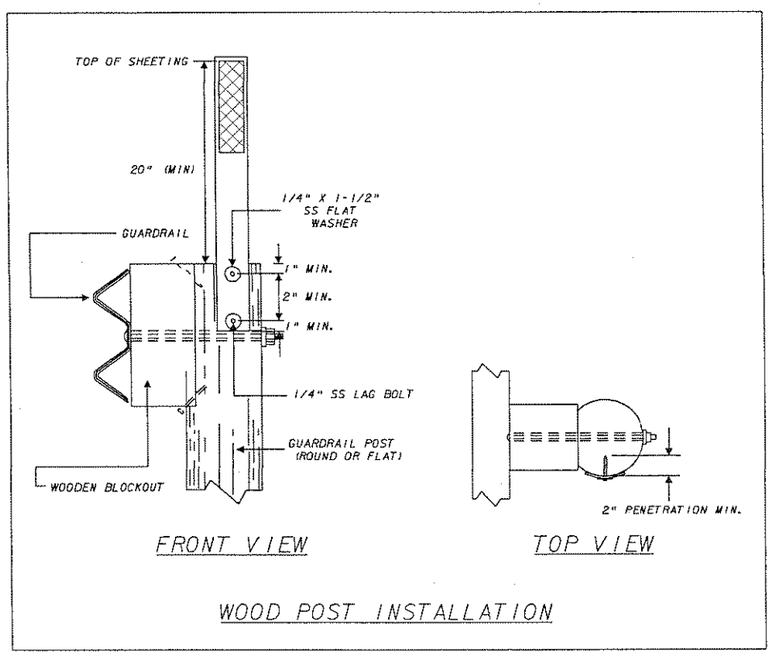

NOTES

- THE DELINEATOR USED SHALL BE A MODEL OFF OF THE CURRENT APPROVED PRODUCTS LISTING (APL).
- WHEN FASTENING, DO NOT TIGHTEN THE FASTENER BEYOND THE POINT WHERE THE SHAPE OF THE DELINEATOR BEGINS TO DEFORM. THE MANUFACTURER PRE-MADE HOLES IN THE DELINEATOR SHALL BE UTILIZED FOR FASTENING, IF POSSIBLE.
- DELINEATORS SHALL BE INSTALLED PLUMB, OR AS PLUMB AS POSSIBLE, REGARDLESS OF THE RELATIVE PLUMBNESS OF THE GUARDRAIL SUPPORT POST.
- SPACING OF DELINEATORS SHALL BE IN ACCORDANCE WITH THE STANDARD DETAILS BOOK, VOLUME II SHEETS TE11-1 AND TE11-4.
- INTERCHANGE LAYOUT SHALL BE IN ACCORDANCE WITH THE STANDARD DETAILS BOOK, VOLUME II SHEET TE11-3.
- ON THE ABOVE REFERENCED STANDARD DETAIL SHEETS, DISREGARD REFERENCES TO "SINGLE" AND "DOUBLE VERTICAL". ALSO, SUBSTITUTE "FLUORESCENT YELLOW" FOR "AMBER".
- THE COLOR OF THE DELINEATOR AND SHEETING SHALL MATCH THE COLOR OF THE PAVEMENT MARKING THAT THE DELINEATOR IS INTENDED TO SUPPLEMENT.

S-3

THE WEST VIRGINIA DEPARTMENT OF TRANSPORTATION
DIVISION OF HIGHWAYS

DELINEATOR QUANTITIES AND DETAILS

REVISION NUMBER	SHEET NUMBER	REVISION	DATE	BY

HDR ENGINEERING, INC.
CONSULTING ENGINEERS
WEIRTON, WV (304) 748-8740

Q.C. CHECKED JBI DATE 12/05 P.M. CHECKED SAB DATE 12/05

DATE: 12/13/2005

FILE: x:\14385\rf_sgn_350803.dgn

PUBLIC ROADS DIV.	STATE DIST. NO.	STATE PROJECT NO.	FEDERAL PROJECT NO.	FISCAL YEAR	COUNTY	SHEET NO.	TOTAL SHEETS
W.V.	6	U305-13 -0.02 00	BR-0013 (042)E	2006	BROOKE	53	163

NOTES:

1. THE EXISTING OVERHEAD SUPPORTS AND SIGNS ARE TO BE REUSED FOR ASSEMBLIES 11 AND 12. ATTACH EXISTING SIGN AND SUPPORT TO A NEW FOUNDATION AS PER TE4-3 AND TE5-1, RESPECTIVELY.
2. ASSEMBLY 11 IS DESIGN NUMBER 2 (TE5-1). REQUIRED FOOTING IS 10.5 CY.
3. ASSEMBLY 12 IS DESIGN NUMBER C-2018-28. REQUIRED FOOTING IS 5.4 CY.
4. BID NEW FOUNDATION AS ITEM 658001-001, "CLASS B CONCRETE FOOTING, REINFORCED, OVERHEAD."

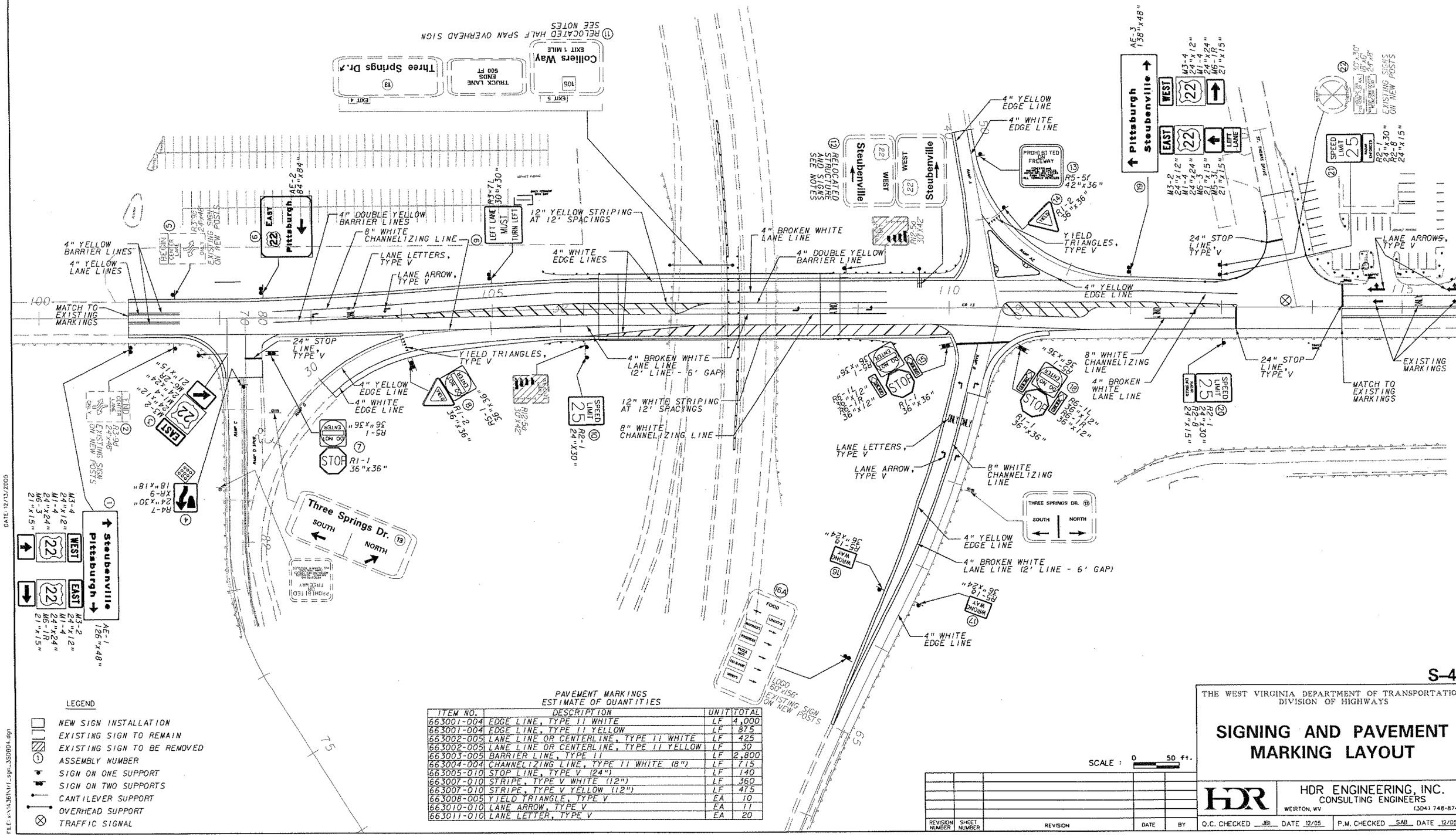

LEGEND

- NEW SIGN INSTALLATION
- EXISTING SIGN TO REMAIN
- EXISTING SIGN TO BE REMOVED
- ASSEMBLY NUMBER
- SIGN ON ONE SUPPORT
- SIGN ON TWO SUPPORTS
- CANTILEVER SUPPORT
- OVERHEAD SUPPORT
- TRAFFIC SIGNAL

PAVEMENT MARKINGS
ESTIMATE OF QUANTITIES

ITEM NO.	DESCRIPTION	UNIT	TOTAL
663001-004	EDGE LINE, TYPE II WHITE	LF	4,000
663001-004	EDGE LINE, TYPE II YELLOW	LF	875
663002-005	LANE LINE OR CENTERLINE, TYPE II WHITE	LF	425
663002-005	LANE LINE OR CENTERLINE, TYPE II YELLOW	LF	30
663003-005	BARRIER LINE, TYPE II	LF	2,800
663004-004	CHANNELIZING LINE, TYPE II WHITE (8")	LF	715
663005-010	STOP LINE, TYPE V (24")	LF	140
663007-010	STRIPE, TYPE V WHITE (12")	LF	360
663007-010	STRIPE, TYPE V YELLOW (12")	LF	475
663008-005	YIELD TRIANGLE, TYPE V	EA	10
663010-010	LANE ARROW, TYPE V	EA	11
663011-010	LANE LETTER, TYPE V	EA	20

SCALE : 0 50 ft.

REVISION NUMBER	SHEET NUMBER	REVISION	DATE	BY

S-4

THE WEST VIRGINIA DEPARTMENT OF TRANSPORTATION
DIVISION OF HIGHWAYS

SIGNING AND PAVEMENT MARKING LAYOUT

HDR ENGINEERING, INC.
CONSULTING ENGINEERS
WEIRTON, WV (304) 748-8740

Q.C. CHECKED JBI DATE 12/05 | P.M. CHECKED SAB DATE 12/05

DATE: 12/13/2005

FILE: v:\14361\tr1_sgn_3SDB04.dgn

PUBLIC ROADS DIV.	STATE DIST. NO.	STATE PROJECT NO.	FEDERAL PROJECT NO.	FISCAL YEAR	COUNTY	SHEET NO.	TOTAL SHEETS
W.V.	6	U305-13 -0.02 00	BR-0013 (042)E	2006	BROOKE	54	163

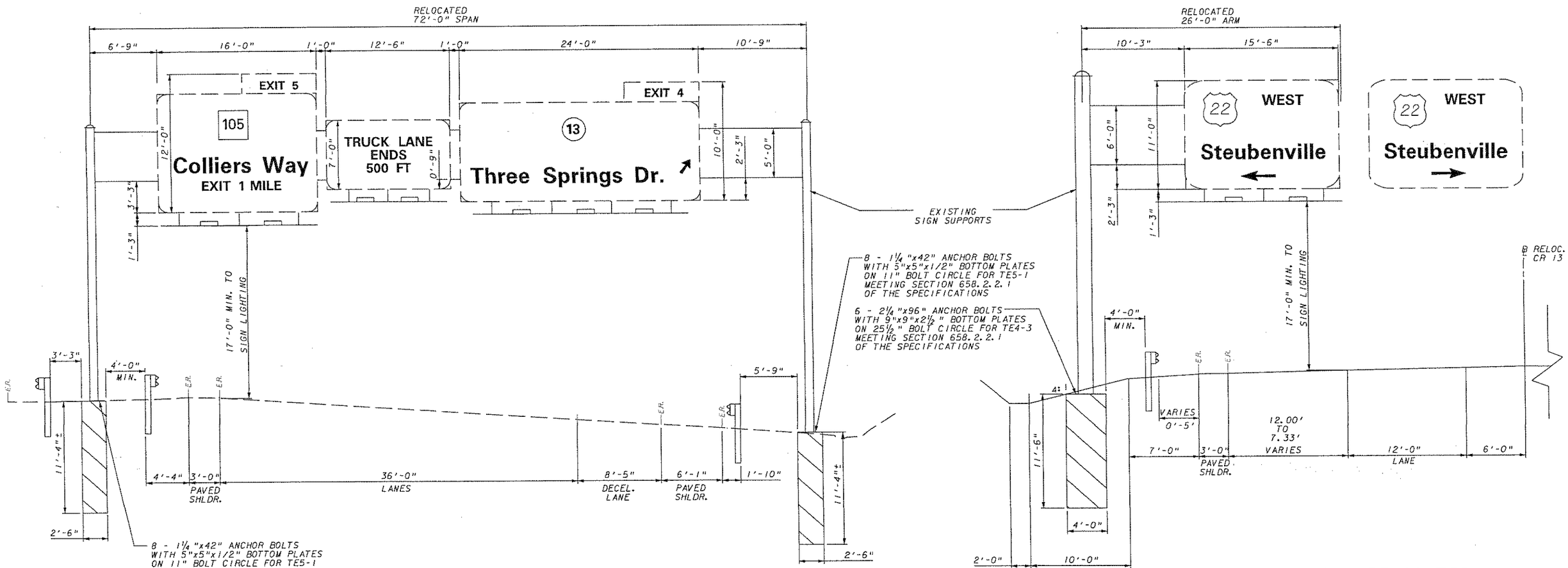

ASSEMBLY #11 (RELOCATED)

US ROUTE 22 EB
SEE STANDARD DRAWING TE5-1
DESIGN NUMBER 2
10.5 CY CONCRETE

ASSEMBLY #12 RELOCATED

STA. 109+70
SEE STANDARD DRAWING TE4-3
DESIGN NUMBER C-2018-28
5.4 CY CONCRETE

NOTES:
1. THE EXISTING OVERHEAD SUPPORTS AND SIGNS ARE TO BE REUSED FOR ASSEMBLIES 11 AND 12. ATTACH EXISTING SIGN SUPPORT TO A NEW FOUNDATION AS PER TE5-1 AND TE4-3, RESPECTIVELY.
2. BID FOUNDATION AS ITEM 658001-001, "CLASS B CONCRETE FOOTING, REINFORCED, OVERHEAD."
3. ROADWAY DIMENSIONS ARE FOR INFORMATION ONLY. CONTRACTOR IS RESPONSIBLE FOR DIMENSION VERIFICATION.
4. SEE MT-1 FOR DETAILS OF SIGN RELOCATION PROCEDURE. ANY DAMAGE TO ANY COMPONENT TO INCLUDE ANY HARDWARE SHALL BE REPLACED/REPAIRED BY THE CONTRACTOR AS PART OF THE OVERHEAD SIGN BID ITEMS.

REVISION NUMBER	SHEET NUMBER	REVISION	DATE	BY

S-5

THE WEST VIRGINIA DEPARTMENT OF TRANSPORTATION
DIVISION OF HIGHWAYS

OVERHEAD SIGN SCHEMATICS

HDR ENGINEERING, INC.
CONSULTING ENGINEERS
WEIRTON, WV (304) 748-8740

Q.C. CHECKED JBI DATE 12/05 P.M. CHECKED SAB DATE 12/05

DATE: 12/13/2005

FILE: x:\14361\tr1_sgn_350805.dgn

PUBLIC ROADS DIV.	STATE DIST. NO.	STATE PROJECT NO.	FEDERAL PROJECT NO.	FISCAL YEAR	COUNTY	SHEET NO.	TOTAL SHEETS
W.V.	6	U305-13 -0.02 00	BR-0013 (042)E	2006	BROOKE	55	163

(1)

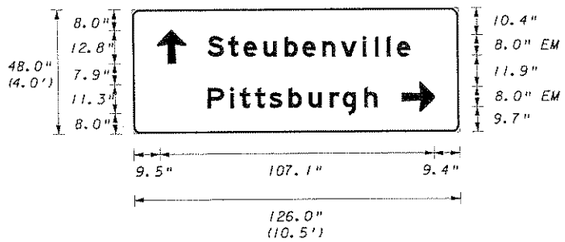

SIGN NUMBER	AE-1			
WIDTH x HEIGHT	10.5'x4.0'			
BORDER WIDTH	1.00"			
CORNER RADIUS	6.00"			
MOUNTING	TYPE: GROUND			
BACKGROUND	TYPE: HI-INTENSITY			
	COLOR: GREEN			
LEGEND/BORDER	TYPE: DEM. HI-INT			
	COLOR: WHITE			

SYMBOL	X	Y	WIDTH	HEIGHT
ARROW	9.5	8.0	11.3	12.8
ARROW	103.8	28.7	12.8	11.3

LETTER SPACINGS ARE TO THE START OF THE NEXT LETTER

LETTER POSITIONS (X)														LENGTH	SERIES
	S	t	e	u	b	e	n	v	i	l	l	e			8"/6" EM
28.8	7.4	5.8	7.0	8.5	7.8	7.0	8.5	7.6	4.8	4.8	4.8	6.2	17.0	80.2	
	P	i	t	t	s	b	u	r	g	h					8"/6" EM
28.8	6.8	4.8	5.8	5.8	6.9	7.8	8.5	5.9	7.8	6.9	30.2			67.0	

(19)

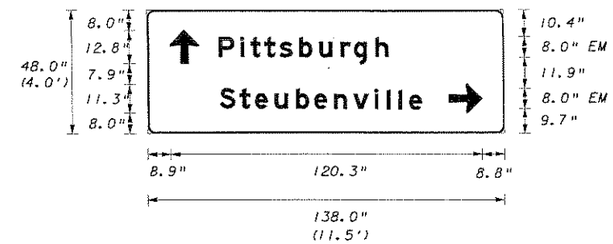

SIGN NUMBER	AE-3			
WIDTH x HEIGHT	11.5'x4.0'			
BORDER WIDTH	1.00"			
CORNER RADIUS	6.00"			
MOUNTING	TYPE: GROUND			
BACKGROUND	TYPE: HI-INTENSITY			
	COLOR: GREEN			
LEGEND/BORDER	TYPE: DEM. HI-INT			
	COLOR: WHITE			

SYMBOL	X	Y	WIDTH	HEIGHT
ARROW	8.9	8.0	11.3	12.8
ARROW	116.4	28.7	12.8	11.3

LETTER SPACINGS ARE TO THE START OF THE NEXT LETTER

LETTER POSITIONS (X)														LENGTH	SERIES
	P	i	t	t	s	b	u	r	g	h					8"/6" EM
28.2	6.8	4.8	5.8	5.8	6.9	7.8	8.5	5.9	7.8	6.9	42.8			67.0	
	S	t	e	u	b	e	n	v	i	l	l	e			8"/6" EM
28.2	7.4	5.8	7.0	8.5	7.8	7.0	8.5	7.6	4.8	4.8	4.8	6.2	29.6	80.2	

(6)

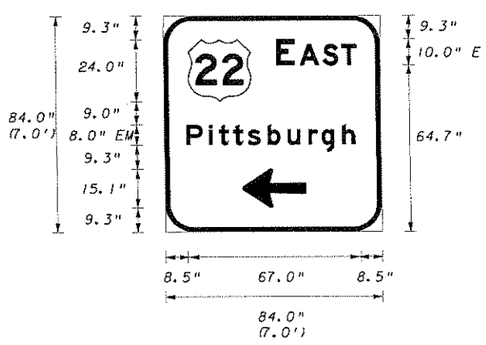

SIGN NUMBER	AE-2			
WIDTH x HEIGHT	7.0'x7.0'			
BORDER WIDTH	2.0"			
CORNER RADIUS	9.0"			
MOUNTING	TYPE: GROUND			
BACKGROUND	TYPE: HI-INTENSITY			
	COLOR: GREEN			
LEGEND/BORDER	TYPE: DEM. HI-INT			
	COLOR: WHITE			

SYMBOL	X	Y	WIDTH	HEIGHT
SHIELD	9.6	9.3	24.0	24.0
ARROW	29.9	59.6	24.3	15.1

LETTER SPACINGS ARE TO THE START OF THE NEXT LETTER

LETTER POSITIONS (X)														LENGTH	SERIES
	E	A	S	T											10"/8" E
43.6	8.2	8.8	7.6	6.3	9.5									30.9	
	P	i	t	t	s	b	u	r	g	h					8"/6" EM
8.5	6.8	4.8	5.8	5.8	6.9	7.8	8.5	5.9	7.8	6.9	8.5			67.0	

S-6

THE WEST VIRGINIA DEPARTMENT OF TRANSPORTATION
DIVISION OF HIGHWAYS

SIGN FABRICATION DETAILS

HDR ENGINEERING, INC.
CONSULTING ENGINEERS
WEIRTON, WV (304) 748-8740

REVISION NUMBER	SHEET NUMBER	REVISION	DATE	BY

Q.C. CHECKED JBI DATE 12/05 P.M. CHECKED SAB DATE 12/05

DATE: 12/13/2005

FILE: x:\14361\rf_sgn_350B06.dgn

PUBLIC ROADS DIV.	STATE DIST. NO.	STATE PROJECT NO.	FEDERAL PROJECT NO.	FISCAL YEAR	COUNTY	SHEET NO.	TOTAL SHEETS
W.V.	6	U305-13-0.02 00	BR-0013 (042)E	2006	BROOKE	56	163

GENERAL NOTES

GOVERNING SPECIFICATIONS

1. THE WEST VIRGINIA DEPARTMENT OF TRANSPORTATION, DIVISION OF HIGHWAYS STANDARD SPECIFICATIONS, ROADS AND BRIDGES, ADOPTED JANUARY 1, 2000, AS AMENDED BY THE WEST VIRGINIA DEPARTMENT OF TRANSPORTATION, DIVISION OF HIGHWAYS, SUPPLEMENTAL SPECIFICATIONS, DATED JANUARY 1, 2003, THE CONTRACT DOCUMENTS, AND THE CONTRACT PLANS ARE THE GOVERNING PROVISIONS APPLICABLE TO THIS PROJECT.

2. THE NATIONAL ELECTRICAL CODE, STANDARDS OF THE NATIONAL BOARD OF FIRE UNDERWRITERS FOR ELECTRICAL WIRING AND APPARATUS.

GENERAL NOTES

3. REPLACEMENT OF ALL CONCRETE AND ASPHALT SHALL BE DONE IN ACCORDANCE TO ORIGINAL DESIGN THICKNESS WHERE IT HAD BEEN DISTURBED OR REMOVED TO INSTALL POLES OR CONDUIT AT THE CONTRACTOR'S EXPENSE.

4. THE INFORMATION SHOWN ON THESE DRAWINGS CONCERNING TYPE AND LOCATION OF UNDERGROUND UTILITIES IS NOT GUARANTEED TO BE ACCURATE OR ALL INCLUSIVE. THE CONTRACTOR IS RESPONSIBLE FOR MAKING HIS OWN DETERMINATION AS TO THE TYPE AND LOCATION OF UNDERGROUND UTILITIES AS MAY BE NECESSARY TO AVOID DAMAGE THERETO. ANY DAMAGE INCURRED SHALL BE REPAIRED AT THE CONTRACTOR'S EXPENSE.

5. ALL AREAS ON THIS PROJECT WHICH HAVE BEEN SEEDED BY OTHERS AND WHICH ARE DISTURBED BY THE CONTRACTOR IN PERFORMING THE REQUIREMENTS OF THIS CONTRACT SHALL BE REPLACED TO THEIR ORIGINAL CONDITION BY APPROVED SEEDING AND MULCHING METHODS AND MATERIALS AS DIRECTED BY THE ENGINEER. NO ADDITIONAL COMPENSATION SHALL BE ALLOWED FOR THIS WORK.

6. COLOR CODING OF ELECTRICAL CONDUCTORS BY USE OF PHASE TAPE OR FIELD PAINT IS NOT ACCEPTABLE ON THIS PROJECT. CONDUCTORS MUST BE MANUFACTURER-COLORED, STRIPED, OR RIGID-MARKED AS SPECIFIED.

7. EXCAVATIONS FOR TRAFFIC SIGNAL CONDUIT NOT UNDER ROADWAY OR SHOULDER AREAS, UNDER 12" IN WIDTH AND 30" IN DEPTH, MAY BE BACKFILLED IN LAYERS NOT EXCEEDING 4" AFTER COMPACTION. SPECIFIC DENSITY TESTS WILL NOT BE REQUIRED WHEN ACCEPTED COMPACTION TECHNIQUES ARE USED AND THE BACKFILLED EXCAVATION DENSITY IS COMPARABLE TO THAT OF THE SURROUNDING GROUND.

CONDUIT INSTALLATION NOTE

8. CONDUIT SHALL BE INSTALLED BY APPROVED JACKING OR DRILLING METHODS. PAVEMENT, BRICK, OR EXISTING SIDEWALK SHALL NOT BE DISTURBED UNLESS APPROVED BY THE ENGINEER. IN THE EVENT THAT SIDEWALK HAS TO BE OPENED, THE ENTIRE SECTION OF SIDEWALK MUST BE REPLACED, JOINT TO JOINT, UNLESS OTHERWISE DIRECTED BY THE PROJECT ENGINEER. BID THIS WORK AS PART OF ITEM 660007-001.

9. THREADED COUPLINGS SHALL BE USED TO CONNECT ALL CONDUITS. SLIP JOINTS, SET SCREW COUPLINGS, AND CONTINUOUS RUNNING THREADS ARE NOT PERMITTED.

ISOLATION RELAY NOTE

10. EACH VEHICLE DETECTOR THAT IS NOT LOCATED IN THE CONTROLLER OR MASTER CABINET, MUST BE PROVIDED WITH ISOLATION RELAYS. IN ADDITION, ALL PEDESTRIAN PUSH BUTTONS (WHEN APPLICABLE) MUST BE PROVIDED WITH ISOLATION RELAYS. THE RELAYS ARE TO PROTECT THE CONTROL EQUIPMENT FROM INDUCED VOLTAGES AND OTHER EXTERNAL INTERFERENCE. THE ISOLATION RELAYS MUST BE LOCATED IN THE CONTROLLER (OR MASTER) CABINET. THE 24 VOLT DETECTION AND LOGIC COMMON CIRCUITS ARE NOT TO RUN EXTERNAL TO THE CONTROLLER (OR MASTER) CABINETS. THE 24 VOLT POWER SUPPLY FOR THE EXTERNAL ISOLATION SYSTEM MUST BE PROVIDED. THE 24 VOLT INTERNAL POWER SUPPLY FROM THE CONTROLLER UNIT CAN NOT BE USED IN THE EXTERNAL ISOLATION SYSTEM.

11. THE CONTRACTOR MAY USE "BONDO 575" OR CHEMQUE Q-SEAL 290S" LOOP DETECTOR SEALANT AS AN ALTERNATIVE TO WEATHERBAN 101 SEALER AS STATED IN SECTION 660.9.

12. THE CONTRACTOR SHALL AVOID PLACING LOOPS THROUGH JOINTS OR CRACKED AREAS AS MUCH AS POSSIBLE. THE LOOP PLACEMENT AS SHOWN ON THE PLAN SHEETS MAY BE ADJUSTED UP TO 5' EITHER WAS TO AVOID THESE AREAS.

LOOP NOTE

13. ALL LOOPS TO HAVE THREE (3) TURNS OF #14 WIRE EXCEPT AS NOTED. TRAFFIC LOOP CABLE FROM 3/4 " FLEXIBLE CONDUIT ENTRANCE IN PAVEMENT TO THE LOOP WIRE TERMINALS IN JUNCTION BOX/CONDULET SHALL BE TWISTED TOGETHER WITH APPROXIMATELY FIVE (5) TURNS PER FOOT. THE LOOP LEAD-IN CABLE FROM THE LOOP WIRE TERMINAL IN JUNCTION BOX/CONDULET TOT HE DETECTOR TERMINALS SHALL HAVE TWO (2) TURNS PER FOOT. CARE MUST BE EXERCISED IN WINDING WIRE FOR QUADRUPLE LOOPS. LOOPS WILL BE TESTED AS TO SENSITIVITY. LOOPS SHALL BE REPLACED AT CONTRACTOR'S EXPENSE IF WIRE IS WOUND INCORRECTLY. CABLE ENTERING THE CONTROLLER CABINET MUST BE CLEARLY AND PERMANENTLY MARKED AS TO FUNCTION. EXAMPLE: DET 1 CH 2 (MEANING RACK DETECTOR 1 CHANNEL 2). DETECTOR FEEDER CABLE SHIELDS ARE NOT TO BE GROUNDED, UNLESS REQUIRED BY THE ENGINEER.

DETECTOR FEEDER CABLE

14. LOOP LEAD-IN WIRE FROM THE LOOP CONDUCTOR TO THE DETECTOR TERMINAL STRIP SHALL BE STRANDED TWO (2) CONDUCTOR, SHIELDED, 14 AWG MEETING IMSA SPECIFICATION 50-2.

LOOP WIRE

15. LOOP WIRE (IN PAVEMENT) SHALL BE STRANDED #14 AWG THHN SINGLE CONDUCTOR.

SUMMARY OF QUANTITIES

ITEM NO.	DESCRIPTION	QUANTITY	
		UNIT	TOTAL
660001-002	SIGNAL CONTROLLER, INSTALLATION ONLY	LS	1
660003-007	SIGNAL SECTION, INSTALLATION ONLY, V-12	EA	9
660004-041	SIGNAL SUPPORT, INSTALLATION ONLY, C1	EA	1
660007-001	MISCELLANEOUS SIGNAL 01	LS	1

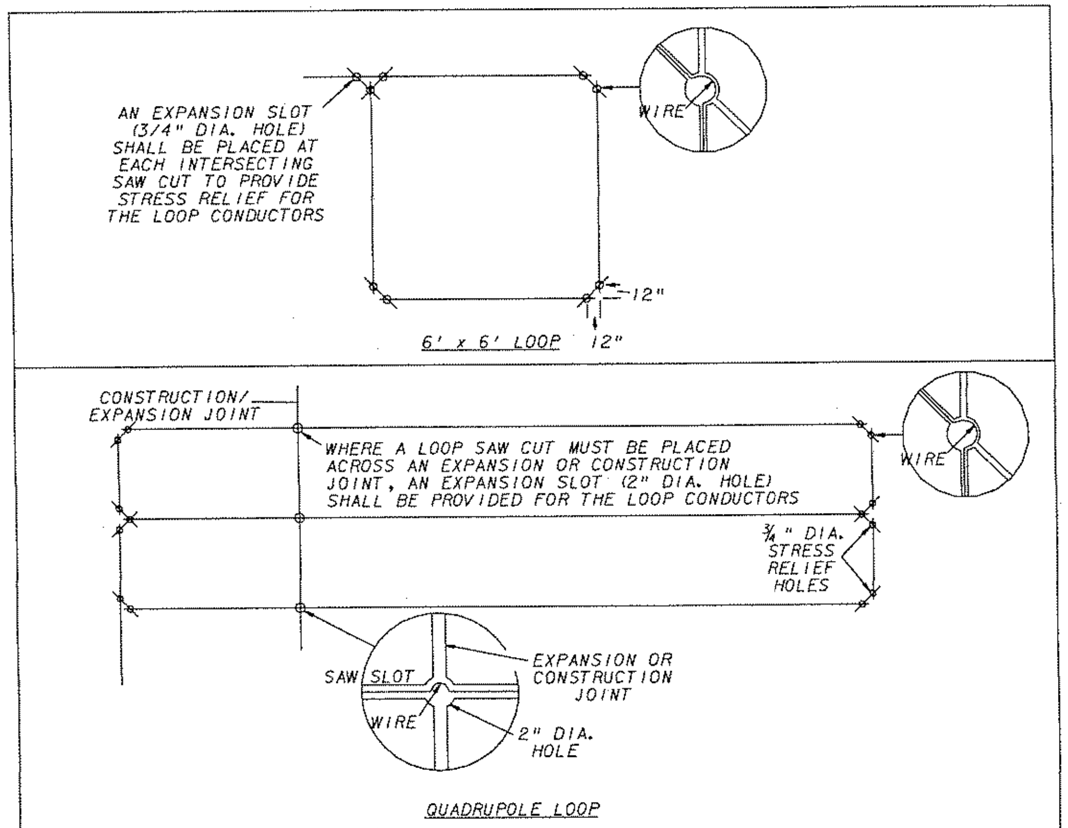

DETAIL 'A'
LOOP INSTALLATION DETAIL
-NOT TO SCALE-

POLES

16. POLE LOCATIONS ON THE PLAN SHEETS MAY BE ALTERED ONLY WITH THE APPROVAL OF THE WEST VIRGINIA DIVISION OF HIGHWAYS, TRAFFIC ENGINEERING DIVISION.
17. ALL POLE LOCATION DIMENSIONS ARE TO THE CENTER OF FOUNDATION.
18. FOUNDATION SIZES FOR RELOCATED POLE SHALL BE INACCORDANCE WITH WEST VIRGINIA DIVISION OF HIGHWAYS STANDARD TES-40.

SIGNAL HEAD CONDUCTOR CABLE

19. ALL NEW SIGNAL HEAD CONDUCTOR CABLE SHALL BE IMSA BLACK PE, 20-1, 7-CONDUCTOR, 14 AWG STRANDED COPPER CABLE RATED AT 600V. THIS CONDUCTOR CABLE SHALL BE RED, ORANGE, GREEN, BLACK, WHITE, AND TWO (2) DIFFERING COLORS IN ACCORDANCE WITH IMSA SPEC COLOR CODE.

20. ALL RELOCATED METALLIC SIGNAL EQUIPMENT SUCH AS POLES, CONDUIT, AND CABINETS MUST BE DIRECTLY BONDED TOGETHER BY A SPECIAL RUN SINGLE-CONDUCTOR #8 AWG STRANDED COPPER WIRE. THE WIRE MUST BE INSULATED, COLOR CODED GREEN AND CONNECTED AT EACH BONDING POINT BY USE OF SCREW-TYPE COPPER OR BRONZE LUGS. IN ADDITION TO THIS BONDING, CONDUCTOR MUST BE CONNECTED TO ALL GROUND RODS IN THE SIGNAL SYSTEM AND TO THE EQUIPMENT GROUND BAR BUSS IN THE CONTROLLER CABINET.

SIGNAL WORK DESCRIPTION

1. THIS IS AN EXISTING SIGNAL.
2. THE SIGNAL POLES (3), SIGNAL HEADS, (6), POWER SERVICE, CONTROLLER, CONTROLLER CABINET, AND DETECTORS ARE EXISTING AND ARE TO BE REUSED.
3. SIGNAL POLE P3 IS TO BE RELOCATED AS SHOWN ON SG-2 WITH A NEW FOUNDATION AND ANCHOR BOLTS. CONTRACTOR SHALL SUPPLY ANCHOR BOLTS. BID AS ITEM 660004-041 (C1).
4. NEW LOOPS ARE TO BE INSTALLED AS SHOWN. BID AS PART OF ITEM 660007-001.
5. NEW CONDUIT IS TO BE INSTALLED AS SHOWN.
6. THE EXISTING CONTROLLER IS TO BE RELOCATED WITH SIGNAL POLE P3. NEW 3" CONDULET TO BE INSTALLED FROM RELOCATED CONTROLLER TO SIGNAL POLE. BID THIS RELOCATION AS ITEM 660001-002.
7. NEW MESSENGER CABLE AND CLAMPS TO BE INSTALLED FROM SIGNAL POLE P2 TO RELOCATED SIGNAL POLE P3. BID AS PART OF ITEM 660007-001. THE EXISTING MESSENGER CABLE FROM SIGNAL POLE P2 TO SIGNAL POLE P1 SHALL BE REUSED.
8. EXISTING SIGNAL HEADS #3, 4, & 5 SHALL BE RELOCATED TO THE NEW MESSENGER CABLE. BID AS ITEM 660003-007.
9. NEW CONDUCTOR CABLE TO BE INSTALLED TO ALL SIGNAL HEADS. BID AS PART OF ITEM 660007-001.
10. THE EXISTING POWER SERVICE SHALL BE RELOCATED WITH SIGNAL POLE P3 AND REWIRED TO RELOCATED CONTROLLER. BID AS PART OF ITEM 660007-001.
11. NEW DETECTOR FEEDER CABLE TO BE INSTALLED TO ALL LOOPS. BID AS PART OF ITEM 660007-001.
12. NEW LUMINAIRE WIRING TO BE INSTALLED TO EXISTING LUMINAIRE ON SIGNAL POLE P2 AND PROPERLY CONNECTED. THIS WIRING TO MATCH EXISTING LUMINAIRE WIRING SIZE AND NUMBER OF CONDUCTORS. BID AS PART OF ITEM 660007-001.
13. CONTRACTOR IS RESPONIBLE FOR THE PROPER OPERATION OF THIS SIGNAL.
14. SIGNAL DOWNTIME TO BE LIMITED TO 8 HOURS, FLAGGING WITH PROPER SIGNING TO BE PROVIDED BY THE CONTRACTOR.

UTILITY NOTE:

THE CONTRACTOR MUST NOTIFY ALL APPLICABLE UTILITIES PRIOR TO ANY EXCAVATION FOR EXACT LOCATION OF THEIR UNDERGROUND FACILITIES. EXTREME CAUTION SHALL BE USED IN THESE AREAS ESPECIALLY IN EXCAVATING FOR FOUNDATIONS AND THE JACKING OF CONDUIT. IF NECESSARY, THE CONTRACTOR SHALL HAND DIG TO LOCATE LINES OR SHALL OPEN CUT IN AREAS OF POSSIBLE CONFLICT. THESE AREAS TO BE DETERMINED BY THE PROJECT ENGINEER. CONTACT "MISS UTILITY" OF WV (1-800-245-4848) PRIOR TO EXCAVATING.

SIGNAL SYSTEM COMPLETION NOTE:

INSTALLATION OF THIS SIGNAL SYSTEM SHALL ONLY BE CONSIDERED SUBSTANTIALLY COMPLETE WHEN ALL PRESCRIBED SIGNAL SYSTEM FUNCTIONS AND ROADWAY DETECTION SYSTEMS ARE OPERATIONAL.

THE CONTRACTOR SHALL COORDINATE HIS ACTIVITIES WITH THE FOLLOWING AGENCIES IN THE AREA:

MOUNTAINEER GAS COMPANY DBA———————MS. CAROL GOOLSBY——————304-348-1651
MONONGAHELA POWER COMPANY ———————MS. TRACY BUNDY———————724-838-6241
A DIVISION OF ALLEGHENY POWER (ELECTRIC)
VERIZON - WV, INC.————————————MR. TOM TAYLOR———————304-344-6535
CITY OF WEIRTON SANITARY BOARD——————MR. A.D. MASTRANTONI————304-797-8550
WEIRTON MUNICIPAL WATER WORKS——————MR. A.D. MASTRANTONI————304-797-8550

REVISION NUMBER	SHEET NUMBER	REVISION	DATE	BY

SG-1

THE WEST VIRGINIA DEPARTMENT OF TRANSPORTATION
DIVISION OF HIGHWAYS

SIGNAL GENERAL NOTES, DETAILS, AND SUMMARY OF QUANTITIES

HDR ENGINEERING, INC.
CONSULTING ENGINEERS
WEIRTON, WV (304) 748-8740

Q.C. CHECKED JBI DATE 12/05 P.M. CHECKED SAB DATE 12/05

DATE: 12/13/2005
FILE: x:\14361\r_sg...SGB01.dgn

PUBLIC ROADS DIV.	STATE DIST. NO.	STATE PROJECT NO.	FEDERAL PROJECT NO.	FISCAL YEAR	COUNTY	SHEET NO.	TOTAL SHEETS
W.V.	6	U305-13 -0.02 00	BR-0013 (042)E	2006	BROOKE	57	163

DUAL RING PHASING

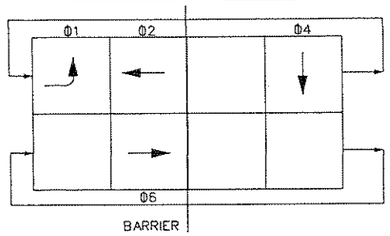

EXISTING SIGNAL HEADS

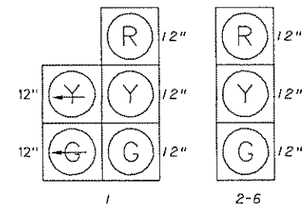

FLASH SEQUENCE

HEAD NO.	FLASH
1-4	Y
5,6	R

ESTIMATE OF QUANTITIES

LIST	QUANTITY	DESCRIPTION
1	1	SIGNAL CONTROLLER, INSTALLATION ONLY
2	9	SIGNAL SECTION, INSTALLATION ONLY, V-12
3	1	SIGNAL SUPPORT, INSTALLATION ONLY, C1
4	AS NEEDED	SAWSLOT, FILLER, AND LOOP WIRE
5	AS NEEDED	MISCELLANEOUS HARDWARE AND ITEMS
6	AS NEEDED	CONDUIT AND CONDUCTOR CABLE
7	1	FOUNDATION W/ ANCHOR BOLTS

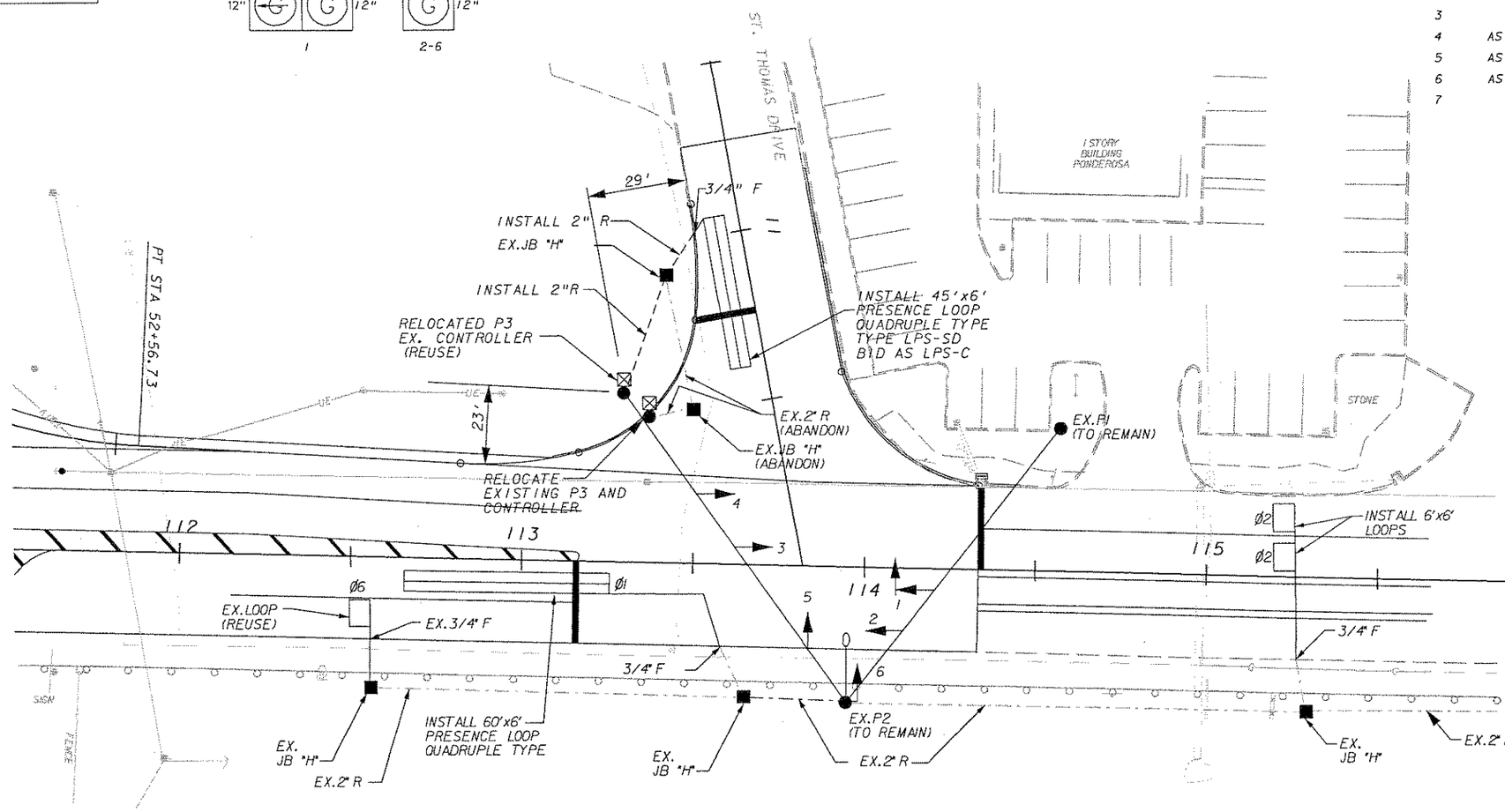

LEGEND

- CONTROLLER
- JUNCTION BOX (TYPE H) (PROPOSED)
- JUNCTION BOX (TYPE H) (EXISTING)
- CONDUIT (PROPOSED)
- CONDUIT (EXISTING)
- SIGNAL POLE (EXISTING)
- TRAFFIC SIGNAL HEAD
- LOOP DETECTOR

POLE CHART

-FOR INFORMATION ONLY-

POLE NO.	TYPE	UPRIGHT POLE: POLE MOUNTED SIGNAL ATTACHMENT "K"	"L"	HEIGHT	O.D.	WALL GA.	ARM ATT.	LOCATION	LUMINAIRE: SPREAD	MOUNTING HEIGHT	ANGLE "G"
P1	C1			27'	12"	3		EX. TO REMAIN			
P2	C1	15'	3'10"	30'	12"	2 PLY 3		EX. TO REMAIN	15'	35'6"	177°
P3	C1			27'	12"	3		EX. TO BE RELOCATED			

SCALE : 0 20 ft.

REVISION NUMBER	SHEET NUMBER	REVISION	DATE	BY

SG-2

THE WEST VIRGINIA DEPARTMENT OF TRANSPORTATION
DIVISION OF HIGHWAYS

SIGNAL LAYOUT
THREE SPRINGS DRIVE AND ST. THOMAS DRIVE

HDR ENGINEERING, INC.
CONSULTING ENGINEERS
WEIRTON, WV (304) 748-8740

Q.C. CHECKED JBI DATE 12/05 | P.M. CHECKED SAB DATE 12/05

DATE: 12/13/2005

FILE: x:\14361\rf_sgl_350802.dgn

PUBLIC ROADS DIV.	STATE DIST. NO.	STATE PROJECT NO.	FEDERAL PROJECT NO.	FISCAL YEAR	COUNTY	SHEET NO.	TOTAL SHEETS
W.V.	6	U305-13 -0.02 00	BR-0013 (042)E	2006	BROOKE	58	163

LIGHTING GENERAL NOTES

SUMMARY OF QUANTITIES

ITEM NO.	DESCRIPTION	QUANTITY	
		UNIT	TOTAL
662002-001	GALVANIZED STEEL CONDUIT 01	LS	1
662002-001	GALVANIZED STEEL CONDUIT 02	LS	1
662006-001	JUNCTION BOX, TYPE H, 18"x18"	EA	12
662006-001	JUNCTION BOX, TYPE B	EA	5
662007-001	LUMINARE, 250W	EA	14
662008-001	CABLE, 01	LS	1
662008-001	CABLE, 02	LS	1
662010-001	LIGHTING SUPPORT, TYPE 1, (40-10)	EA	1
662010-001	LIGHTING SUPPORT, TYPE 1, (40-15)	EA	6
662013-001	SERVICE AND CONTROL STATION, 01	LS	1
662013-001	SERVICE AND CONTROL STATION, 02	LS	1
662014-001	INCIDENTAL ELECTRICAL WORK	LS	1
662015-001	ELECTRICAL TEST, 01	LS	1
662015-001	ELECTRICAL TEST, 02	LS	1

GOVERNING SPECIFICATIONS

A. THE WEST VIRGINIA DEPARTMENT OF TRANSPORTATION (WVDOT), DIVISION OF HIGHWAYS STANDARD SPECIFICATIONS, ROADS AND BRIDGES, ADOPTED 2000, AS AMENDED BY THE WEST VIRGINIA DEPARTMENT OF TRANSPORTATION, DIVISION OF HIGHWAYS, SUPPLEMENTAL SPECIFICATIONS, DATED JULY 1, 2003. THE CONTRACT DOCUMENTS AND THE CONTRACT PLANS ARE THE GOVERNING PROVISIONS APPLICABLE TO THIS PROJECT.

B. THE NATIONAL ELECTRICAL CODE STANDARDS OF THE NATIONAL BOARD OF FIRE UNDERWRITERS AND ELECTRICAL WIRING AND APPARATUS.

C. ALL APPLICABLE STANDARD DRAWINGS FOR THIS PROJECT ARE INCLUDED IN WEST VIRGINIA DIVISION OF HIGHWAYS STANDARD DETAILS BOOK, VOLUME II, SIGNING, LIGHTING AND MARKINGS, ISSUE DATE JANUARY 1, 1994.

LIGHTING GENERAL NOTES

1. POLE POSITIONS SHOWN ON THE PLANS MAY BE RELOCATED, LATERALLY +/- TWO FEET, BY THE DISTRICT ENGINEER. ANY RELOCATION BEYOND TWO FEET SHALL BE ONLY BY THE AUTHORIZATION OF THE TRAFFIC ENGINEERING DIVISION, CHARLESTON.
2. THE LUMINAIRE BALLAST SHALL BE RATED AT 240 VOLTS. THE ELECTRICAL POWER SYSTEM SHALL BE 120/240 VOLT, 3 WIRE WITH GROUND, SINGLE PHASE, 60 HZ.
3. LUMINAIRE MOUNTING HEIGHT SHALL BE 40 FEET AND THE SUPPORT ARM SHALL BE TRUSS TYPE UNLESS OTHERWISE DESIGNATED ON THE PLANS.
4. GROUND MOUNTED LUMINAIRE SUPPORT BASES SHALL BE THE TRANSFORMER TYPE IN ACCORDANCE WITH STANDARD DETAIL TEL-18, UNLESS OTHERWISE NOTED ON THE PLANS.
5. THE POWER SERVICES ARE EXISTING AND THE NEW CONTROL STATIONS MUST PROVIDE AS DETAILED ON PLANS WITH A MINIMUM OF TWO SEPARATE 2-POLE CIRCUITS WITH SEPARATE OVERCURRENT BREAKERS. EACH CIRCUIT RUN MUST BE DESIGNED SO THAT ALTERNATE LIGHTS ARE ON DIFFERENT CIRCUITS AND THE ELECTRICAL LOAD IS EVENLY DISTRIBUTED AS MUCH AS POSSIBLE.
6. WHERE CONDUITS ARE INSTALLED IN SHOULDERS OR PAVEMENTS, THE AREA DISTURBED SHALL BE REPLACED TO THE ORIGINAL DESIGN CONDITIONS AS REQUIRED IN SECTION 662.6 OF THE SPECIFICATIONS.
7. ANY CONDUIT TO BE PLACED UNDER EXISTING PAVEMENT SHALL BE DONE BY APPROVED JACKING OR DRILLING METHODS. OPEN TRENCH METHOD MAY BE USED ONLY WITH THE SPECIFIC APPROVAL OF THE ENGINEER FOR EACH LOCATION REQUESTED.
8. UNDERGROUND CONDUIT PLACEMENT SHALL BE IN ACCORDANCE WITH APPLICABLE CODE REQUIREMENTS. ALL UNDERGROUND GAS LINES, WATER LINES, ETC. IN THE CONSTRUCTION AREA SHALL BE LOCATED AND MARKED BY THE APPROPRIATE UTILITY UPON NOTIFICATION BY THE CONTRACTOR PRIOR TO PLACING ANY CONDUIT.
9. COLOR CODING OF ELECTRICAL CONDUCTORS BY USE OF PHASE TAPE OR FIELD PAINT IS NOT ACCEPTABLE ON THIS PROJECT. CONDUCTORS MUST BE MANUFACTURER-COLORED, STRIPED, OR RIGID MARKED AS SPECIFIED.
10. THE CONTRACTOR SHALL BE RESPONSIBLE FOR SIZING ALL WIRE IN ACCORDANCE WITH THE LOAD REQUIREMENTS. ALL FEEDER WIRES SHALL BE A MINIMUM SIZE OF AWG #8 AND ALL TAP WIRES SHALL BE A MINIMUM OF AWG #10.
11. THE OVERHEAD LUMINAIRES SHALL BE CLASSIFIED AS MEDIUM/SEMI-CUTOFF, TYPE III (TYPICAL GE 1008) EQUIPPED WITH A 250 WATT HPS LAMP, OR APPROVED EQUAL.

UTILITY INFORMATION

ALLEGHENY POWER
3 SPRINGS DRIVE
WEIRTON, WV 26062
CONTACT:
KATHY FORD - (304) 723-6237

INDEX TO DRAWINGS

NO.	DESCRIPTION
L-1	GENERAL NOTES AND QUANTITIES
L-2	LIGHTING PLAN
L-3	ONE LINE DIAGRAMS
L-4	TYPICAL SECTIONS

L-1

THE WEST VIRGINIA DEPARTMENT OF TRANSPORTATION
DIVISION OF HIGHWAYS

LIGHTING GENERAL NOTES AND QUANTITIES

HDR ENGINEERING, INC.
CONSULTING ENGINEERS
WEIRTON, WV (304) 748-8740

Q.C. CHECKED JBI DATE 12/05 P.M. CHECKED SAB DATE 12/05

REVISION NUMBER	SHEET NUMBER	REVISION	DATE	BY

DATE: 12/13/2005

FILE: x:\14361\rf_dll_350901.dgn

PUBLIC ROADS DIV.	STATE DIST. NO.	STATE PROJECT NO.	FEDERAL PROJECT NO.	FISCAL YEAR	COUNTY	SHEET NO.	TOTAL SHEETS
W.V.	6	U305-13-0.02 00	BR-0013 (042)E	2006	BROOKE	59	163

LIGHT POLE DESIGNATION

POLE NUMBER
CONTROLLER NO.
CIRCUIT NO.
ARM LENGTH

L1-1-1-4
STA. 50+48
5' LT

STATION
OFFSET REFERENCE
OFFSET DISTANCE

NOTES:

1. ADDITIONAL GENERAL NOTES ARE ON SHEET L-1
2. SEE WVDOH STANDARD DETAILS TEL-01 THROUGH TEL-43 FOR CONSTRUCTION DETAILS.
3. THE ELECTRICAL INSTALLATION SHALL CONFORM TO THE LATEST ADDITION OF THE NATIONAL ELECTRICAL CODE AND ALL STATE AND LOCAL ORDINANCES AND CODES.
4. TRENCHING FOR CONDUIT WILL NOT BE PERMITTED THROUGH EXISTING PAVEMENT. DIRECTIONAL BORING SHALL BE USED TO ROUTE CONDUIT AND WIRING UNDER EXISTING PAVEMENT.
5. LOCATE ALL EXISTING UTILITIES PRIOR TO BEGINNING WORK.
6. GROUND ALL METAL PARTS OF SWITCHES, CASES, POLES, AND CONDUIT WITH AWG #6 BARE COPPER WIRE.
7. LUMINAIRES TO BE 250 W 120/208/240/277 MULTI-TAP (LU 250/BD/S) TYPE III MEDIUM SEMI-CUTOFF; HPS GE 1008 OR APPROVED EQUAL.
8. EXISTING LUMINAIRES L1, L4, L5, L6, L7, L10, AND L11 ARE TO BE RELAMPED. BID AS ITEM 662007-001.

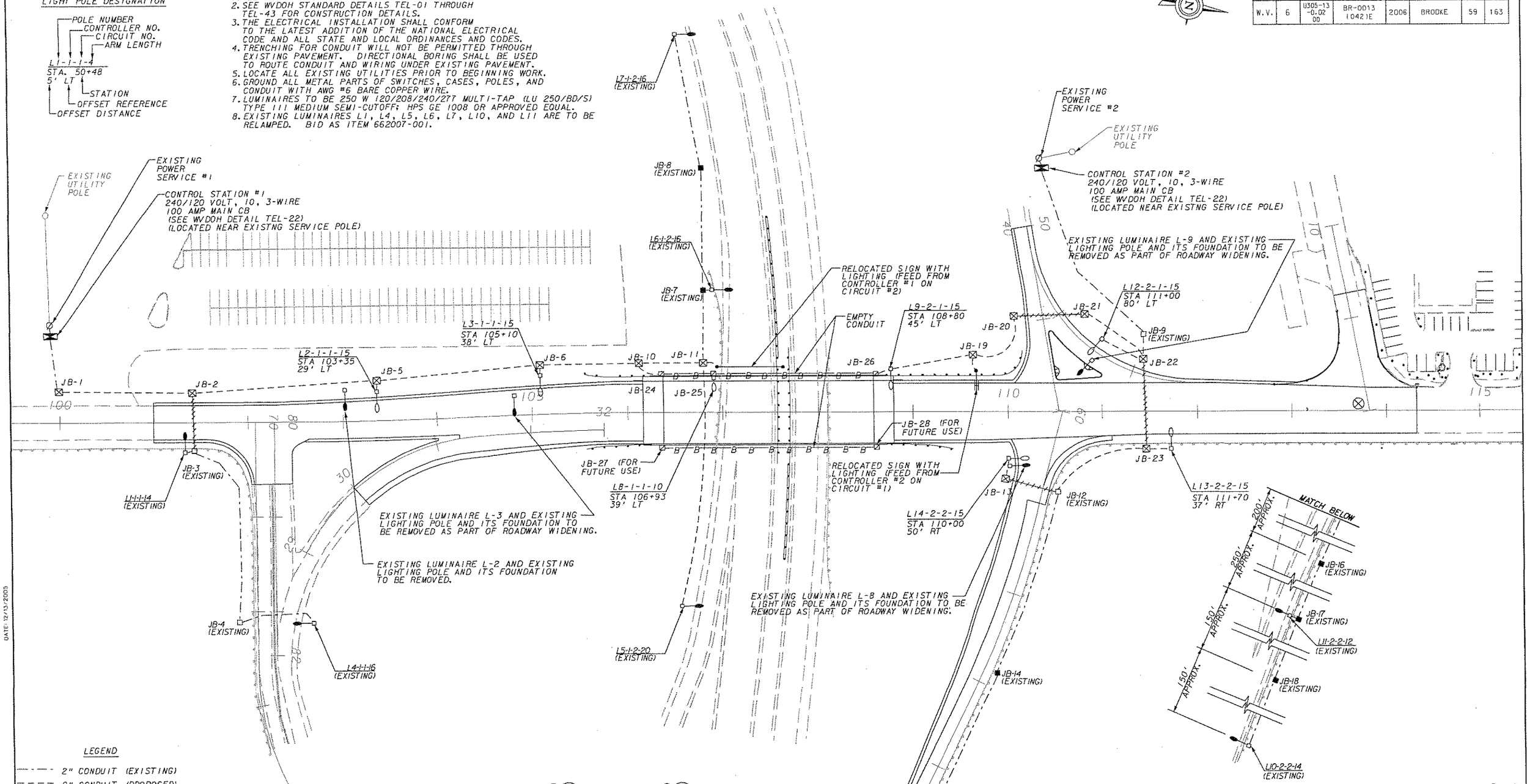

LEGEND

- 2" CONDUIT (EXISTING)
- 2" CONDUIT (PROPOSED)
- 3" CONDUIT (PROPOSED)
- 2" CONDUIT (PROPOSED IN PARAPET)
- 250-WATT HPS POLE ASSEMBLIES, (W/FOUNDATION, POLE, ARM, LUMINAIRE) EXISTING
- 250-WATT HPS POLE ASSEMBLIES, (W/FOUNDATION, POLE, ARM, LUMINAIRE) PROPOSED
- JUNCTION BOX, AT GRADE, 18" X 18" EXISTING
- JUNCTION BOX, AT GRADE, 10" X 10" EXISTING
- JUNCTION BOX, AT GRADE, TYPE H - 18" X 18"
- JUNCTION BOX, RECESSED IN BARRIER, TYPE B
- POWER SOURCE LOCATION - EXISITNG
- LIGHTING CONTROL STATION

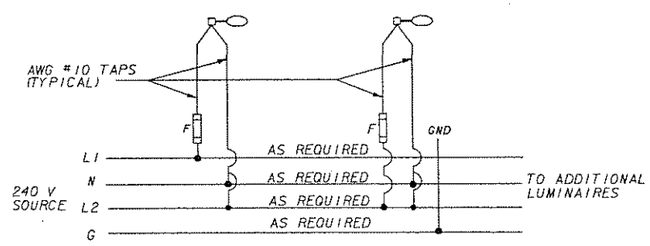

TYPICAL WIRING DIAGRAM

SCALE : 0 50 ft.

REVISION NUMBER	SHEET NUMBER	REVISION	DATE	BY

L-2

THE WEST VIRGINIA DEPARTMENT OF TRANSPORTATION
DIVISION OF HIGHWAYS

LIGHTING LAYOUT

HDR ENGINEERING, INC.
CONSULTING ENGINEERS
WEIRTON, WV (304) 748-8740

O.C. CHECKED JBI DATE 12/05 P.M. CHECKED SAB DATE 12/05

DATE: 12/13/2005

FILE: x:\14361\rf_sit_350802.dgn

PUBLIC ROADS DIV.	STATE DIST. NO.	STATE PROJECT NO.	FEDERAL PROJECT NO.	FISCAL YEAR	COUNTY	SHEET NO.	TOTAL SHEETS
W.V.	6	U305-13 -0.02 00	BR-0013 (042)E	2006	BROOKE	60	163

CONDUIT & CONDUCTOR SCHEDULE			
MARK	CONDUCTORS	INSULATION	CONDUIT
U1	BY UTILITY	AS REQ'ED	AS REQUIRED
U2	BY UTILITY	AS REQ'ED	AS REQUIRED
U3	BY UTILITY	AS REQ'ED	AS REQUIRED
U4	BY UTILITY	AS REQ'ED	AS REQUIRED
1	3-#2 CU, 1-#6 CU GND	THWN	EXISTING
2	EXISTING	THWN	2" CONDUIT
3	BY ELECTRICAL CONTRACTOR	THWN	2" CONDUIT
4	BY ELECTRICAL CONTRACTOR	THWN	3" CONDUIT

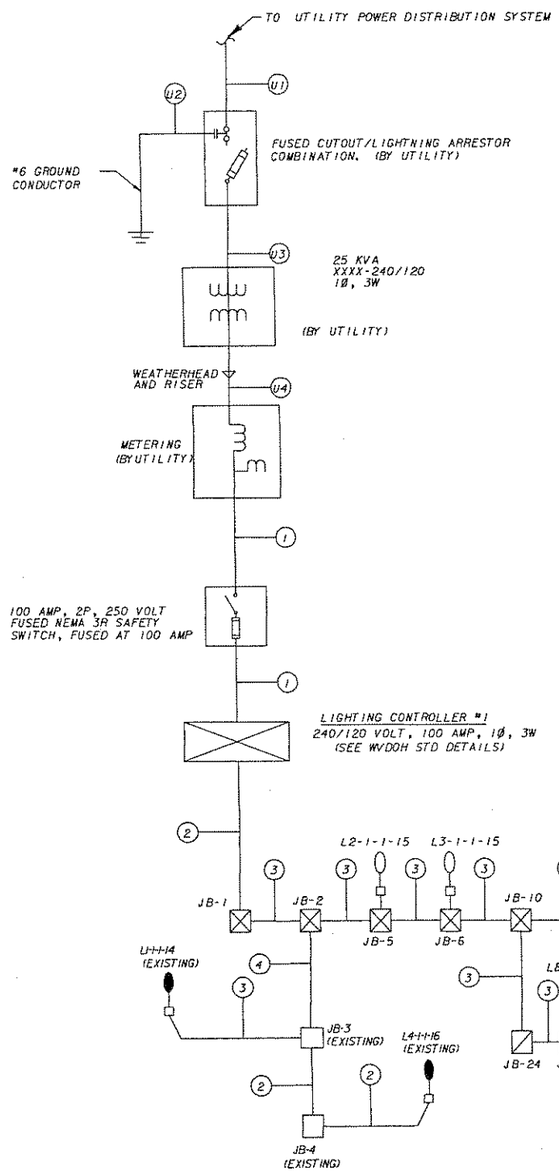

LIGHTING
STA. 101+00 TO STA. 106+93

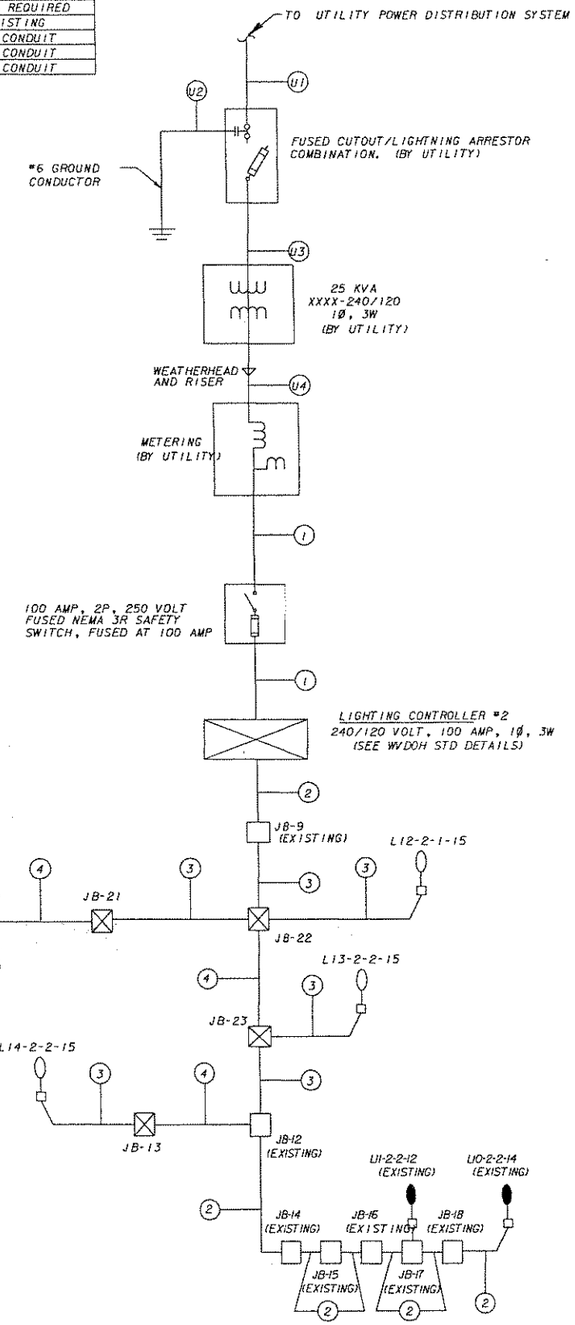

LIGHTING
STA. 108+80 TO STA. 111+70

GENERAL NOTES:

1. ADDITIONAL GENERAL ELECTRICAL NOTES CAN BE FOUND ON SHEET L-1
2. SEE WEST VIRGINIA DEPARTMENT OF HIGHWAYS STANDARD PLANS TEL-01 THROUGH TEL-43 FOR CONSTRUCTION DETAILS FOR ALL COMPONENTS.

SPECIFIC NOTES:

1. THE ELECTRICAL CONTRACTOR SHALL BE RESPONSIBLE FOR SIZING ALL WIRING IN ACCORDANCE WITH THE LOAD REQUIREMENTS. ALL FEEDER WIRES SHALL BE A MINIMUM SIZE OF AWG #8 AND ALL TAP WIRES SHALL BE A MINIMUM OF AWG #10.
2. THE ELECTRICAL CONTRACTOR SHALL FURNISH AND INSTALL A LIGHTING CONTROLLER PER WVDOH STANDARDS WITH 2 EA. - 240 VOLT, 30 AMP, SINGLE PHASE BRANCH CIRCUITS.

ONE LINE DIAGRAMS

NOT TO SCALE

REVISION NUMBER	SHEET NUMBER	REVISION	DATE	BY

L-3

THE WEST VIRGINIA DEPARTMENT OF TRANSPORTATION
DIVISION OF HIGHWAYS

ONE LINE DIAGRAMS

HDR ENGINEERING, INC.
CONSULTING ENGINEERS
WEIRTON, WV (304) 748-8743

Q.C. CHECKED JBI DATE 12/05 P.M. CHECKED SAB DATE 12/05

DATE: 12/13/2005

FILE: x:\14361\rf_61_359803.dgn

PUBLIC ROADS DIV.	STATE DIST. NO.	STATE PROJECT NO.	FEDERAL PROJECT NO.	FISCAL YEAR	COUNTY	SHEET NO.	TOTAL SHEETS
W.V.	6	U305-13 -0.02 00	BR-0013 (042)E	2006	BROOKE	2	163

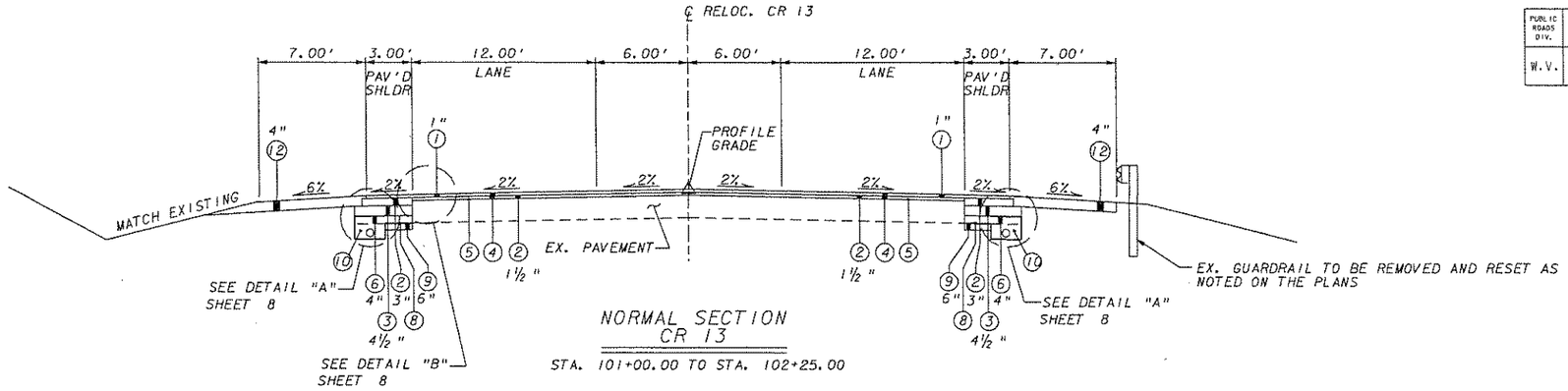

NORMAL SECTION
CR 13

STA. 101+00.00 TO STA. 102+25.00

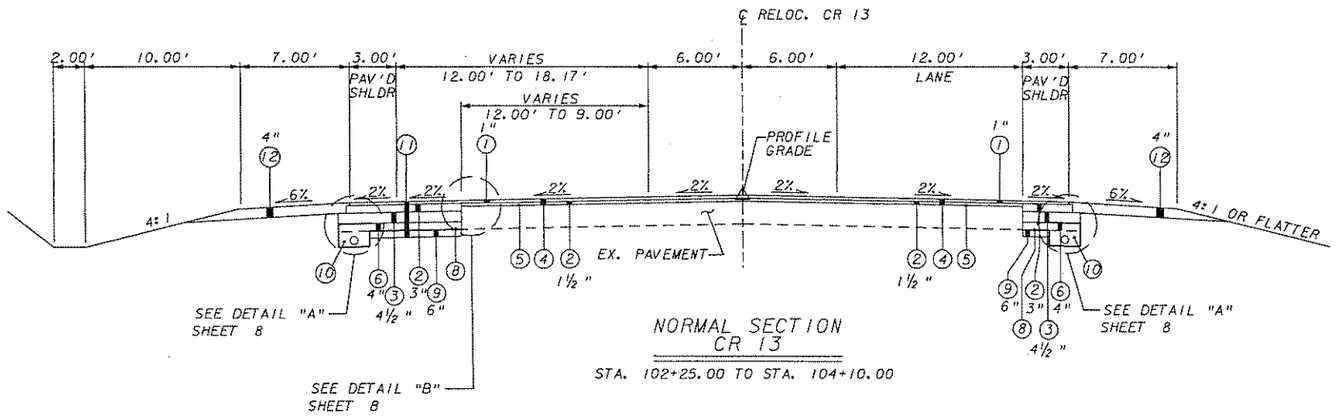

NORMAL SECTION
CR 13

STA. 102+25.00 TO STA. 104+10.00

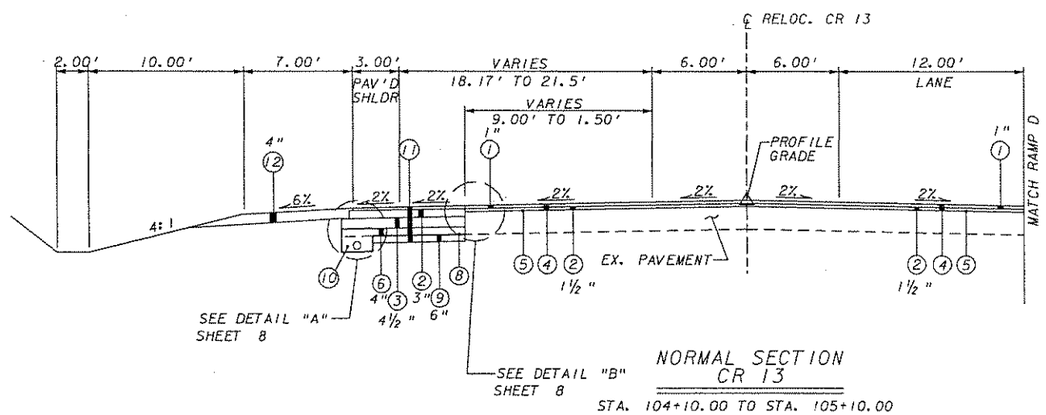

NORMAL SECTION
CR 13

STA. 104+10.00 TO STA. 105+10.00

LEGEND

1. 402001-001 MARSHALL HOT-MIX ASPHALT SKID RESISTANT PAVEMENT, TYPE 4, TN
2. 401001-001 MARSHALL HOT-MIX ASPHALT BASE COURSE, TYPE 2, TN
3. 401001-001 MARSHALL HOT-MIX ASPHALT BASE COURSE, TYPE 1, TN
4. 415005-001 REMOVING EXISTING PAVEMENT SURFACE, SY
5. 408002-001 BITUMINOUS MATERIAL, GA
6. 311006-001 OPEN GRADED FREE DRAINING BASE COURSE, CY
7. 307005-000 AGGREGATE BASE COURSE, CLASS 10, TN
8. 207034-000 FABRIC FOR SEPARATION, SY
9. 207002-000 SUBGRADE, CY
10. 606029-001 FREE DRAINING BASE TRENCH, LF
11. 207001-001 UNCLASSIFIED EXCAVATION, CY
12. 307005-001 AGGREGATE BASE COURSE, CLASS 10, TN
13. 610001-003 PLAIN CONCRETE CURBING, TYPE III, LF
14. 607001-001 TYPE 1 GUARDRAIL, CLASS 1, LF
15. 609001-001 CONCRETE SIDEWALK, SY
16. 501005-012 12 INCH NON-REINFORCED PORTLAND CEMENT CONCRETE PAVEMENT, SY
17. 610001-001 PLAIN CONCRETE CURBING, TYPE 1, LF

NOTE:

HEAVY MIX DESIGN SHALL BE USED ON ALL HOT-MIX ASPHALT REQUIRED ON THIS PROJECT.

REVISION NUMBER	SHEET NUMBER	REVISION	DATE	BY

THE WEST VIRGINIA DEPARTMENT OF TRANSPORTATION
DIVISION OF HIGHWAYS

TYPICAL SECTIONS

HDR ENGINEERING, INC.
CONSULTING ENGINEERS
WEIRTON, WV (304) 748-8740

Q.C. CHECKED WWK DATE 12/05 | P.M. CHECKED SAB DATE 12/05

DATE: 12/13/2005

FILE: K:\14361\rdy_typ_350Bsd01.dgn

PUBLIC ROADS DIV.	STATE DIST. NO.	STATE PROJECT NO.	FEDERAL PROJECT NO.	FISCAL YEAR	COUNTY	SHEET NO.	TOTAL SHEETS
W.V.	6	U305-13 -0.02 00	BR-0013 (042)E	2006	BROOKE	3	163

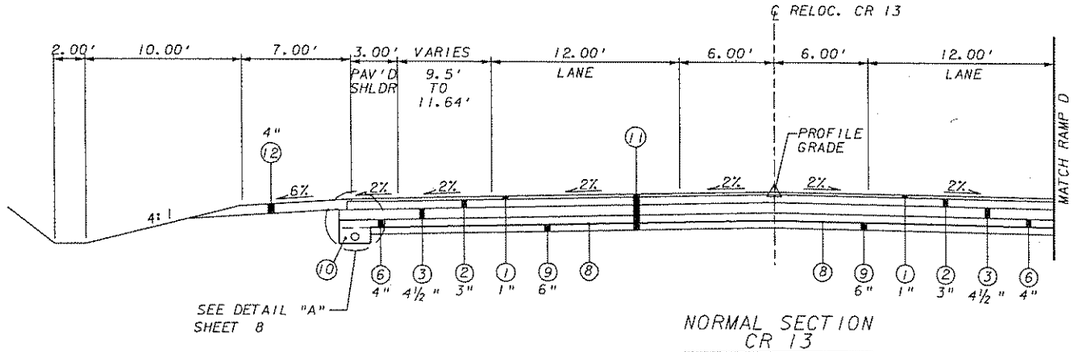

NORMAL SECTION
CR 13

STA. 105+10.00 TO STA. 105+74.26

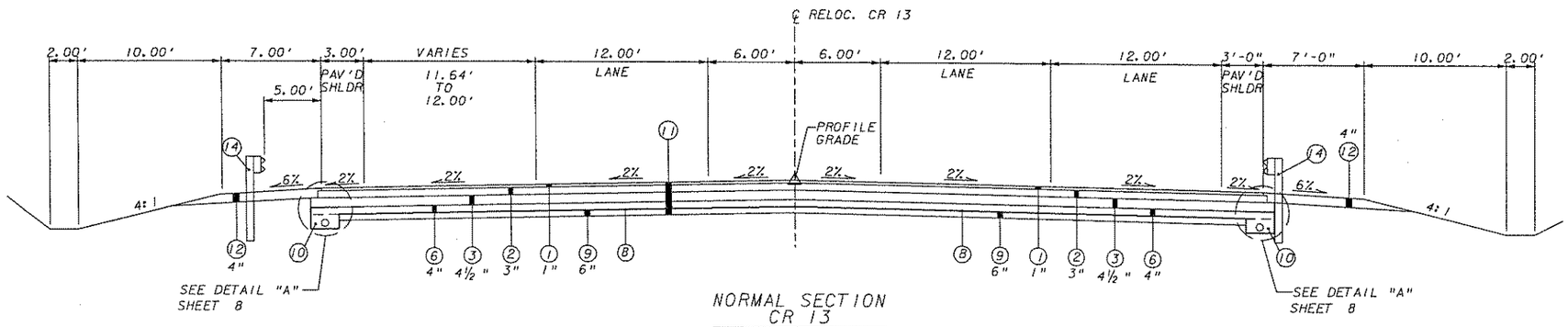

NORMAL SECTION
CR 13

STA. 105+74.26 TO STA. 105+85.00

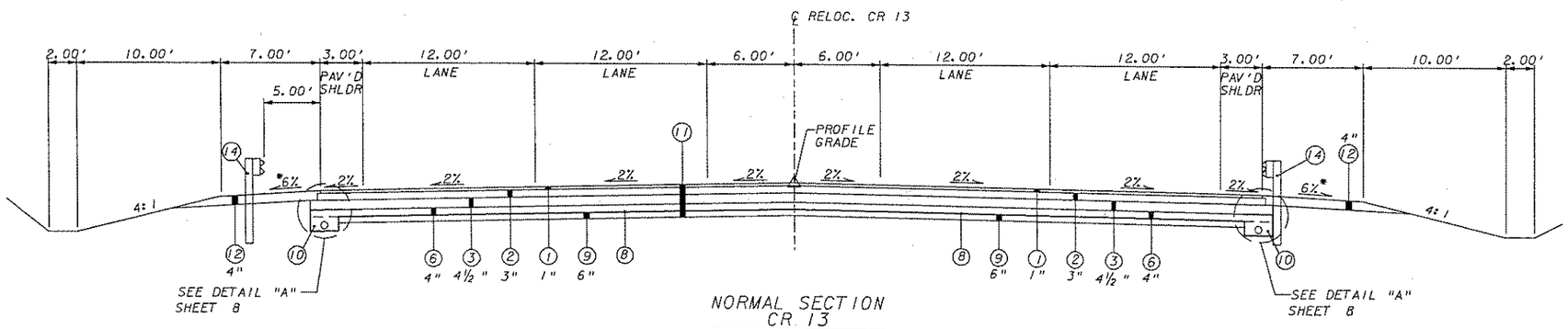

NORMAL SECTION
CR 13

STA. 105+85.00 TO STA. 106+16.58
STA. 108+80.08 TO STA. 109+75.00

*TRANSITION 6% SHOULDER CROSS SLOPE TO 2% FROM STATION 106+06.58 TO STATION 106+16.58

TRANSITION 2% SHOULDER CROSS SLOPE TO 6% FROM STATION 108+80.08 TO STATION 108+90.08

LEGEND

1. 402001-001 MARSHALL HOT-MIX ASPHALT SKID RESISTANT PAVEMENT, TYPE 4, TN
2. 401001-001 MARSHALL HOT-MIX ASPHALT BASE COURSE, TYPE 2, TN
3. 401001-001 MARSHALL HOT-MIX ASPHALT BASE COURSE, TYPE 1, TN
4. 415005-001 REMOVING EXISTING PAVEMENT SURFACE, SY
5. 408002-001 BITUMINOUS MATERIAL, GA
6. 311006-001 OPEN GRADED FREE DRAINING BASE COURSE, CY
7. 307005-000 AGGREGATE BASE COURSE, CLASS 10, TN
8. 207034-000 FABRIC FOR SEPARATION, SY
9. 207002-000 SUBGRADE, CY
10. 606029-001 FREE DRAINING BASE TRENCH, LF
11. 207001-001 UNCLASSIFIED EXCAVATION, CY
12. 307005-001 AGGREGATE BASE COURSE, CLASS 10, TN
13. 610001-003 PLAIN CONCRETE CURBING, TYPE III, LF
14. 607001-001 TYPE 1 GUARDRAIL, CLASS 1, LF
15. 609001-001 CONCRETE SIDEWALK, SY
16. 501005-012 12 INCH NON-REINFORCED PORTLAND CEMENT CONCRETE PAVEMENT, SY
17. 610001-001 PLAIN CONCRETE CURBING, TYPE 1, LF

NOTE:

HEAVY MIX DESIGN SHALL BE USED ON ALL HOT-MIX ASPHALT REQUIRED ON THIS PROJECT.

THE WEST VIRGINIA DEPARTMENT OF TRANSPORTATION
DIVISION OF HIGHWAYS

TYPICAL SECTIONS

REVISION NUMBER	SHEET NUMBER	REVISION	DATE	BY

HDR ENGINEERING, INC.
CONSULTING ENGINEERS
WEIRTON, WV (304) 748-8740

Q.C. CHECKED WWK DATE 12/05 | P.M. CHECKED SAB DATE 12/05

DATE: 12/13/2005

FILE: X:\14361\dgn\typ_350Bes01.dgn

PUBLIC ROADS DIV.	STATE DIST. NO.	STATE PROJECT NO.	FEDERAL PROJECT NO.	FISCAL YEAR	COUNTY	SHEET NO.	TOTAL SHEETS
W.V.	6	U305-13 -0.02 00	BR-0013 (042)E	2006	BROOKE	4	163

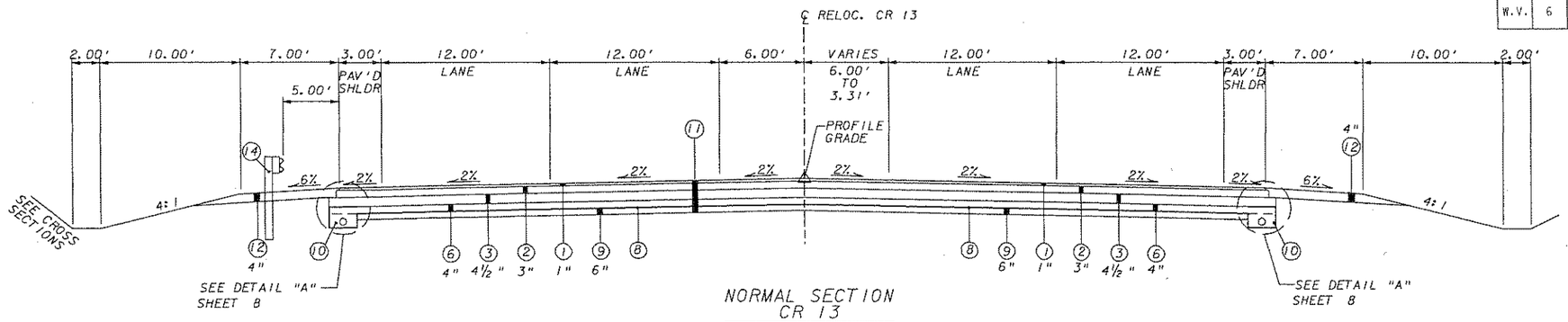

NORMAL SECTION
CR 13

STA. 109+75.00 TO STA. 110+55.70

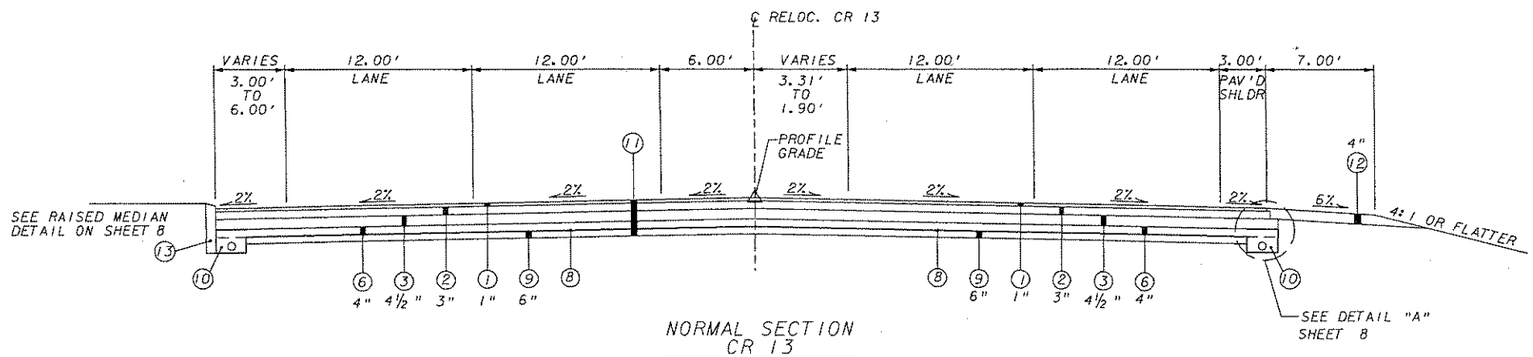

NORMAL SECTION
CR 13

STA. 110+55.70 TO STA. 110+97.95

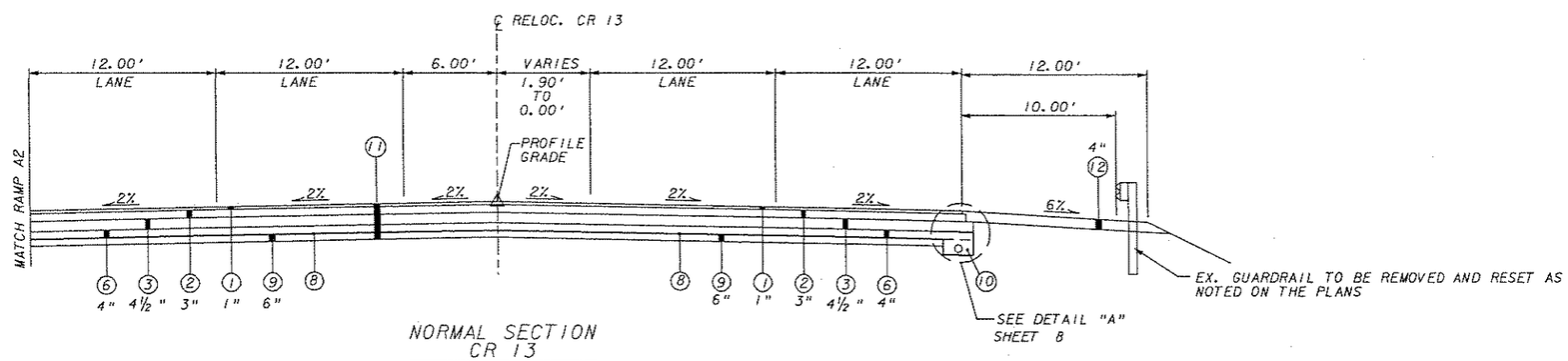

NORMAL SECTION
CR 13

STA. 110+97.95 TO STA. 111+55.00

LEGEND

1. 402001-001 MARSHALL HOT-MIX ASPHALT SKID RESISTANT PAVEMENT, TYPE 4, TN
2. 401001-001 MARSHALL HOT-MIX ASPHALT BASE COURSE, TYPE 2, TN
3. 401001-001 MARSHALL HOT-MIX ASPHALT BASE COURSE, TYPE 1, TN
4. 415005-001 REMOVING EXISTING PAVEMENT SURFACE, SY
5. 408002-001 BITUMINOUS MATERIAL, GA
6. 311006-001 OPEN GRADED FREE DRAINING BASE COURSE, CY
7. 307005-000 AGGREGATE BASE COURSE, CLASS 10, TN
8. 207034-000 FABRIC FOR SEPARATION, SY
9. 207002-000 SUBGRADE, CY
10. 606029-001 FREE DRAINING BASE TRENCH, LF
11. 207001-001 UNCLASSIFIED EXCAVATION, CY
12. 307005-001 AGGREGATE BASE COURSE, CLASS 10, TN
13. 610001-003 PLAIN CONCRETE CURBING, TYPE III, LF
14. 607001-001 TYPE 1 GUARDRAIL, CLASS 1, LF
15. 609001-001 CONCRETE SIDEWALK, SY
16. 501005-012 12 INCH NON-REINFORCED PORTLAND CEMENT CONCRETE PAVEMENT, SY
17. 610001-001 PLAIN CONCRETE CURBING, TYPE 1, LF

NOTE:

HEAVY MIX DESIGN SHALL BE USED ON ALL HOT-MIX ASPHALT REQUIRED ON THIS PROJECT.

REVISION NUMBER	SHEET NUMBER	REVISION	DATE	BY

THE WEST VIRGINIA DEPARTMENT OF TRANSPORTATION
DIVISION OF HIGHWAYS

TYPICAL SECTIONS

HDR ENGINEERING, INC.
CONSULTING ENGINEERS
WEIRTON, WV (304) 748-8740

Q.C. CHECKED WWK DATE 12/05 | P.M. CHECKED SAB DATE 12/05

DATE: 12/13/2005

FILE: X:\14361\rdy_typ_3508E01.dgn

PUBLIC ROADS DIV.	STATE DIST. NO.	STATE PROJECT NO.	FEDERAL PROJECT NO.	FISCAL YEAR	COUNTY	SHEET NO.	TOTAL SHEETS
W.V.	6	U305-13 -0.02 00	BR-0013 10421E	2006	BROOKE	5	163

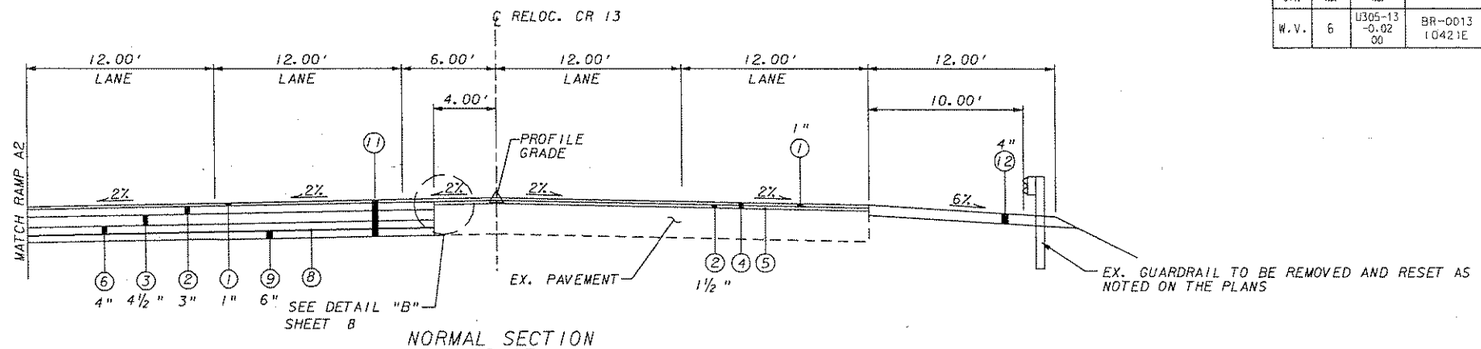

NORMAL SECTION
CR 13

STA. 111+55.00 TO STA. 112+20.00

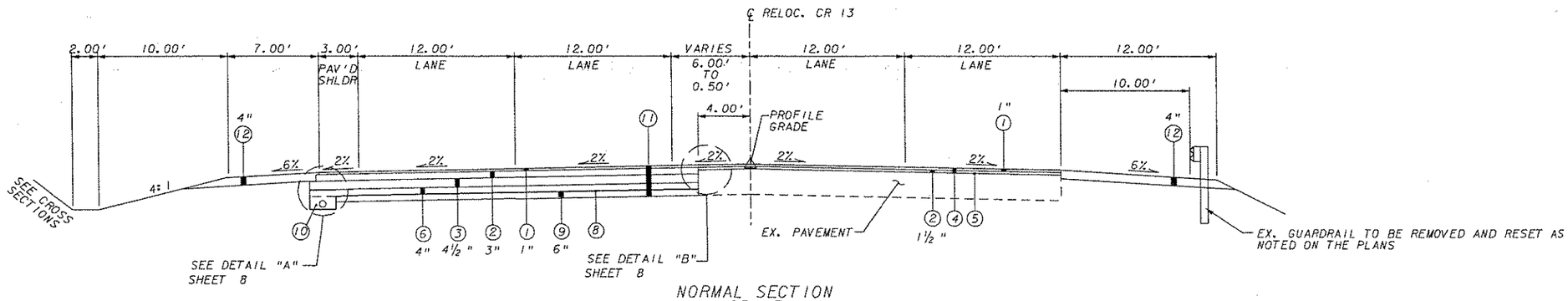

NORMAL SECTION
CR 13

STA. 112+20.00 TO STA. 113+85.00

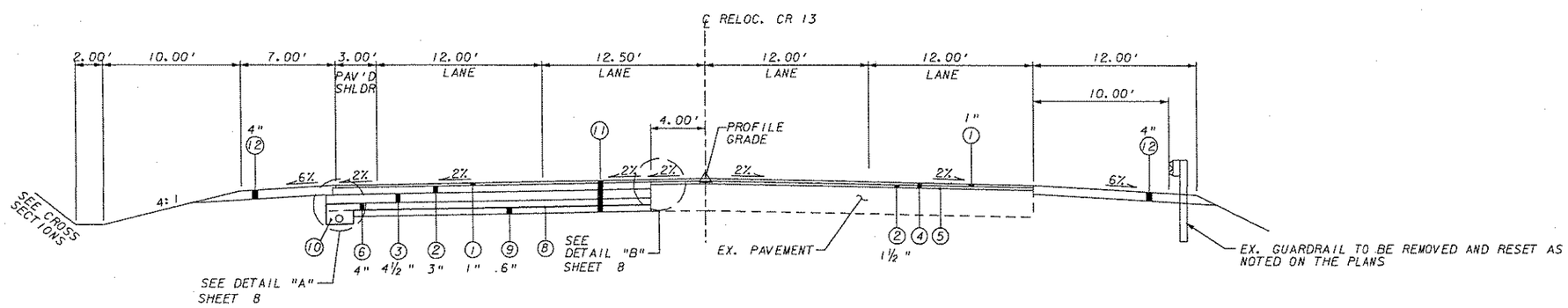

NORMAL SECTION
CR 13

STA. 113+85.00 TO STA. 114+33.00

LEGEND

1. 402001-001 MARSHALL HOT-MIX ASPHALT SKID RESISTANT PAVEMENT, TYPE 4, TN
2. 401001-001 MARSHALL HOT-MIX ASPHALT BASE COURSE, TYPE 2, TN
3. 401001-001 MARSHALL HOT-MIX ASPHALT BASE COURSE, TYPE 1, TN
4. 415005-001 REMOVING EXISTING PAVEMENT SURFACE, SY
5. 408002-001 BITUMINOUS MATERIAL, GA
6. 311006-001 OPEN GRADED FREE DRAINING BASE COURSE, CY
7. 307005-000 AGGREGATE BASE COURSE, CLASS 10, TN
8. 207034-000 FABRIC FOR SEPARATION, SY
9. 207002-000 SUBGRADE, CY
10. 606029-001 FREE DRAINING BASE TRENCH, LF
11. 207001-001 UNCLASSIFIED EXCAVATION, CY
12. 307005-001 AGGREGATE BASE COURSE, CLASS 10, TN
13. 610001-003 PLAIN CONCRETE CURBING, TYPE III, LF
14. 607001-001 TYPE 1 GUARDRAIL, CLASS 1, LF
15. 609001-001 CONCRETE SIDEWALK, SY
16. 501005-012 12 INCH NON-REINFORCED PORTLAND CEMENT CONCRETE PAVEMENT, SY
17. 610001-001 PLAIN CONCRETE CURBING, TYPE 1, LF

NOTE:

HEAVY MIX DESIGN SHALL BE USED ON ALL HOT-MIX ASPHALT REQUIRED ON THIS PROJECT.

THE WEST VIRGINIA DEPARTMENT OF TRANSPORTATION
DIVISION OF HIGHWAYS

TYPICAL SECTIONS

REVISION NUMBER	SHEET NUMBER	REVISION	DATE	BY

HDR ENGINEERING, INC.
CONSULTING ENGINEERS
WEIRTON, WV (304) 748-8740

Q.C. CHECKED WWK DATE 12/05 | P.M. CHECKED SAB DATE 12/05

DATE: 12/13/2005

FILE: X:\1436\rdy_typ_3500Rev01.dgn

PUBLIC ROADS DIV.	STATE DIST. NO.	STATE PROJECT NO.	FEDERAL PROJECT NO.	FISCAL YEAR	COUNTY	SHEET NO.	TOTAL SHEETS
W.V.	6	U305-13 -0.02 00	BR-0013 (042)E	2006	BROOKE	6	163

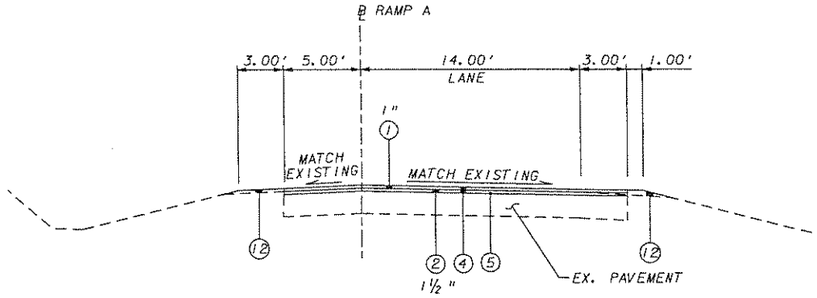

NORMAL SECTION
RAMP A

STA. 40+00.00 TO STA. 40+69.60

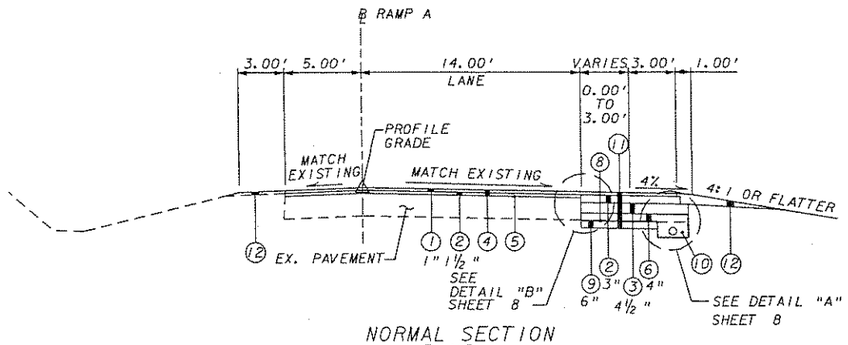

NORMAL SECTION
RAMP A

STA. 40+69.60 TO STA. 41+14.60

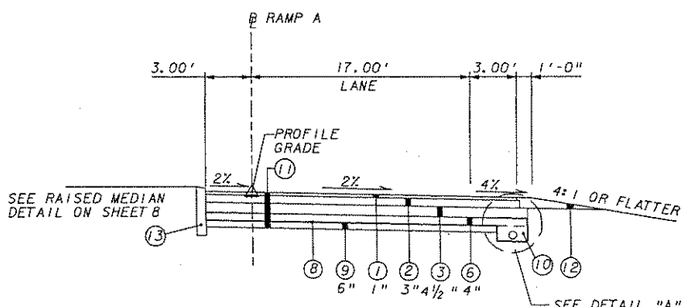

NORMAL SECTION
RAMP A

STA. 41+14.60 TO STA. 41+65.88

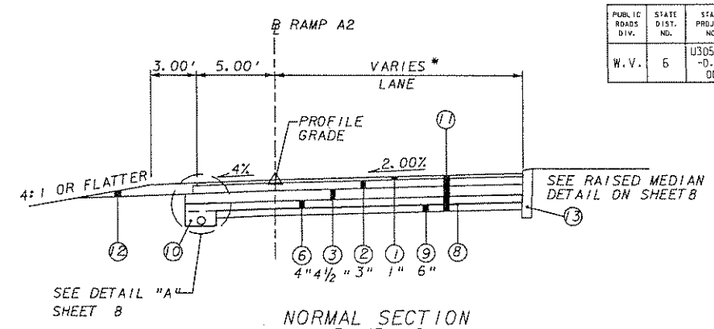

NORMAL SECTION
RAMP A2

STA. 50+23.57 TO STA. 51+09.00 * (0.00' TO 16.00')
STA. 51+93.62 TO STA. 52+56.73 * (16.00 TO 0.00')

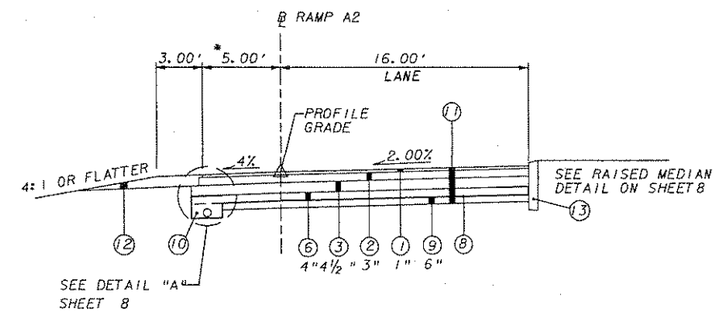

NORMAL SECTION
RAMP A2

STA. 51+09.00 TO STA. 51+93.62

* SHOULDER VARIES 5.00' - 3.00'
STA. 51+97.00 TO STA. 52+56.73

LEGEND

1. 402001-001 MARSHALL HOT-MIX ASPHALT SKID RESISTANT PAVEMENT, TYPE 4, TN
2. 401001-001 MARSHALL HOT-MIX ASPHALT BASE COURSE, TYPE 2, TN
3. 401001-001 MARSHALL HOT-MIX ASPHALT BASE COURSE, TYPE 1, TN
4. 415005-001 REMOVING EXISTING PAVEMENT SURFACE, SY
5. 408002-001 BITUMINOUS MATERIAL, GA
6. 311006-001 OPEN GRADED FREE DRAINING BASE COURSE, CY
7. 307005-000 AGGREGATE BASE COURSE, CLASS 10, TN
8. 207034-000 FABRIC FOR SEPARATION, SY
9. 207002-000 SUBGRADE, CY
10. 606029-001 FREE DRAINING BASE TRENCH, LF
11. 207001-001 UNCLASSIFIED EXCAVATION, CY
12. 307005-001 AGGREGATE BASE COURSE, CLASS 10, TN
13. 610001-003 PLAIN CONCRETE CURBING, TYPE III, LF
14. 607001-001 TYPE 1 GUARDRAIL, CLASS 1, LF
15. 609001-001 CONCRETE SIDEWALK, SY
16. 501005-012 12 INCH NON-REINFORCED PORTLAND CEMENT CONCRETE PAVEMENT, SY
17. 610001-001 PLAIN CONCRETE CURBING, TYPE 1, LF

NOTE:

HEAVY MIX DESIGN SHALL BE USED ON ALL HOT-MIX ASPHALT REQUIRED ON THIS PROJECT.

THE WEST VIRGINIA DEPARTMENT OF TRANSPORTATION
DIVISION OF HIGHWAYS

TYPICAL SECTIONS

HDR ENGINEERING, INC.
CONSULTING ENGINEERS
WEIRTON, WV (304) 748-8740

REVISION NUMBER	SHEET NUMBER	REVISION	DATE	BY

Q.C. CHECKED WWK DATE 12/05 P.M. CHECKED SAB DATE 12/05

DATE: 12/13/2005

FILE: X:\14.361\roy_typ_3508e501.dgn

PUBLIC ROADS DIV.	STATE DIST. NO.	STATE PROJECT NO.	FEDERAL PROJECT NO.	FISCAL YEAR	COUNTY	SHEET NO.	TOTAL SHEETS
W.V.	6	U305-13 -0.02 00	BR-0013 (042)E	2006	BROOKE	7	163

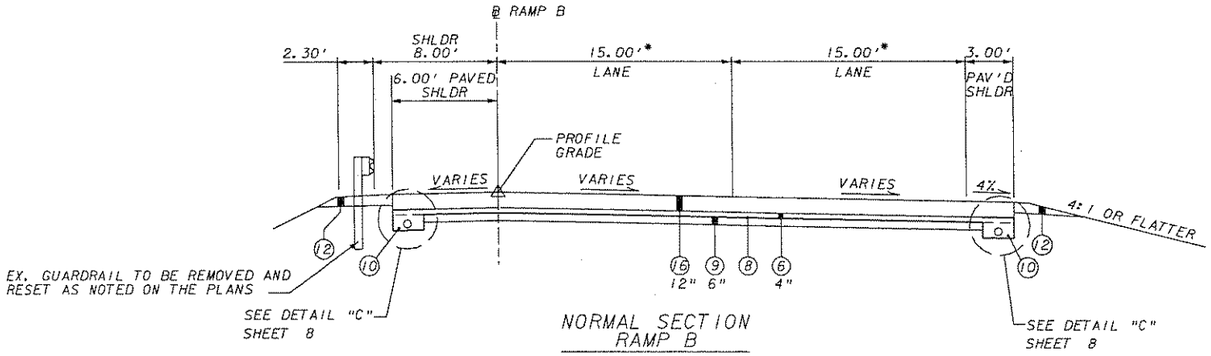

NORMAL SECTION
RAMP B

STA. 60+28.59 TO STA. 61+00.00

* DOES NOT INCLUDE RADII

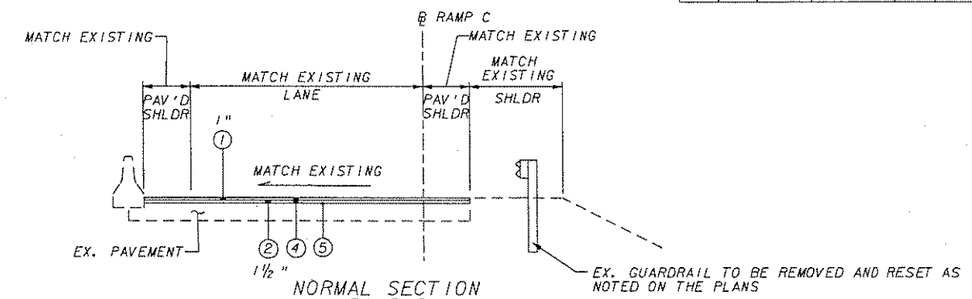

NORMAL SECTION
RAMP C

STA. 70+18.00 TO STA. 70+65.00

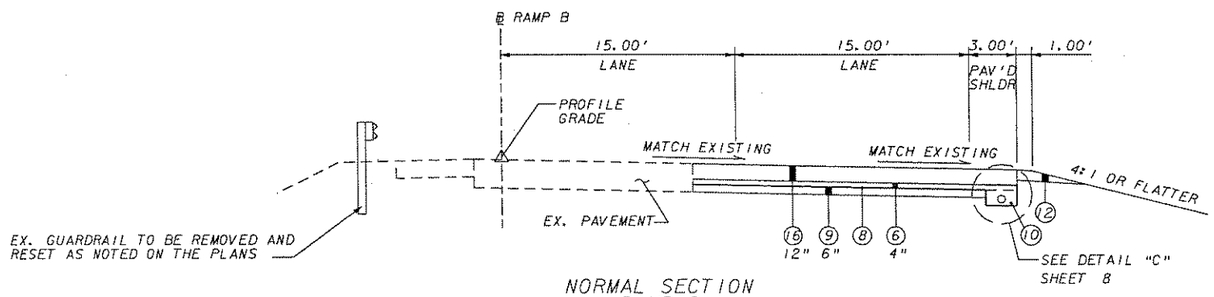

NORMAL SECTION
RAMP B

STA. 61+00.00 TO STA. 62+31.00

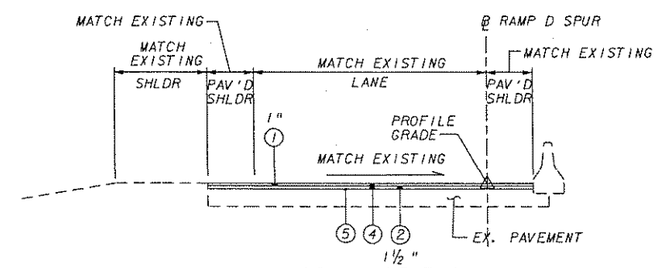

NORMAL SECTION
RAMP D SPUR

STA. 80+18.00 TO STA. 80+65.00

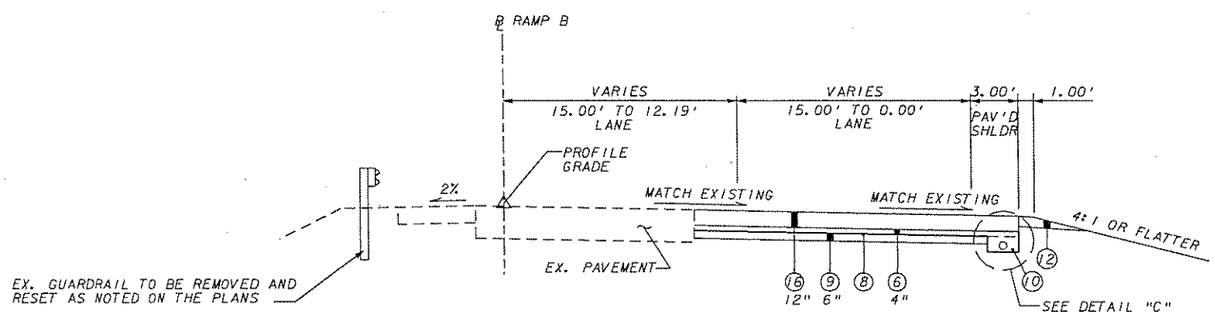

NORMAL SECTION
RAMP B

STA. 62+31.00 TO STA. 64+98.15

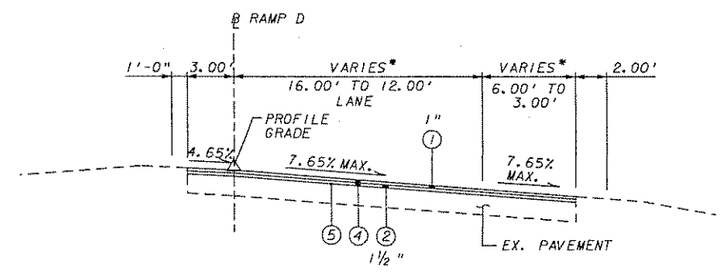

SUPERELEVATED SECTION
RAMP D

STA. 30+00.00 TO STA. 31+50

* TAPER BETWEEN STA. 31+50 TO 32+70

NOTE:

HEAVY MIX DESIGN SHALL BE USED ON ALL HOT-MIX ASPHALT REQUIRED ON THIS PROJECT.

LEGEND

1. 402001-001 MARSHALL HOT-MIX ASPHALT SKID RESISTANT PAVEMENT, TYPE 4, TN
2. 401001-001 MARSHALL HOT-MIX ASPHALT BASE COURSE, TYPE 2, TN
3. 401001-001 MARSHALL HOT-MIX ASPHALT BASE COURSE, TYPE 1, TN
4. 415005-001 REMOVING EXISTING PAVEMENT SURFACE, SY
5. 408002-001 BITUMINOUS MATERIAL, GA
6. 311006-001 OPEN GRADED FREE DRAINING BASE COURSE, CY
7. 307005-000 AGGREGATE BASE COURSE, CLASS 10, TN
8. 207034-000 FABRIC FOR SEPARATION, SY
9. 207002-000 SUBGRADE, CY
10. 606029-001 FREE DRAINING BASE TRENCH, LF
11. 207001-001 UNCLASSIFIED EXCAVATION, CY
12. 307005-001 AGGREGATE BASE COURSE, CLASS 10, TN
13. 610001-003 PLAIN CONCRETE CURBING, TYPE III, LF
14. 607001-001 TYPE 1 GUARDRAIL, CLASS 1, LF
15. 609001-001 CONCRETE SIDEWALK, SY
16. 501005-012 12 INCH NON-REINFORCED PORTLAND CEMENT CONCRETE PAVEMENT, SY
17. 610001-001 PLAIN CONCRETE CURBING, TYPE 1, LF

REVISION NUMBER	SHEET NUMBER	REVISION	DATE	BY

THE WEST VIRGINIA DEPARTMENT OF TRANSPORTATION
DIVISION OF HIGHWAYS

TYPICAL SECTIONS

HDR ENGINEERING, INC.
CONSULTING ENGINEERS
WEIRTON, WV (304) 748-8740

Q.C. CHECKED WWK DATE 12/05 | P.M. CHECKED SAB DATE 12/05

DATE: 12/13/2005

FILE: X:\14.351\rdy_typ_3508csd1.dgn

PUBLIC ROADS DIV.	STATE DIST. NO.	STATE PROJECT NO.	FEDERAL PROJECT NO.	FISCAL YEAR	COUNTY	SHEET NO.	TOTAL SHEETS
W.V.	6	U305-13 -0.02 00	BR-0013 (042)E	2006	BROOKE	8	163

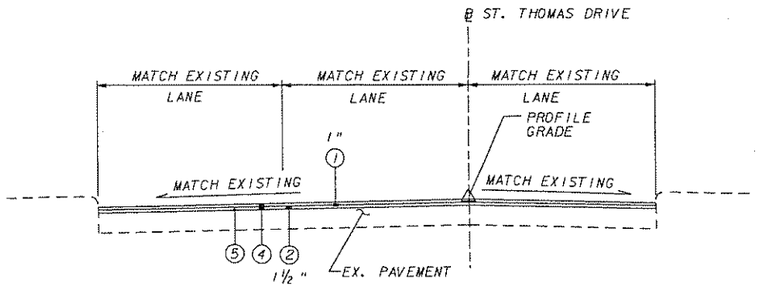

ST. THOMAS DRIVE

STA. 10+73.00 TO STA. 10+90.00

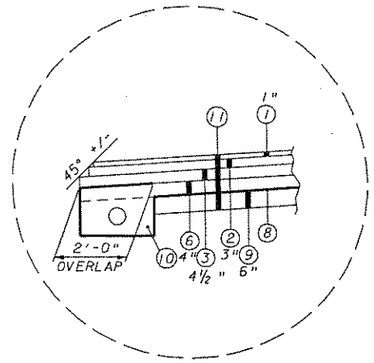

DETAIL "A"

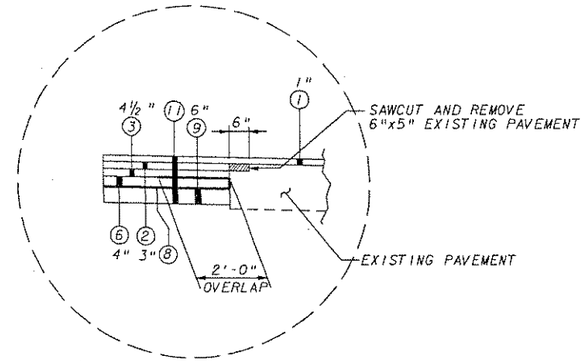

DETAIL "B"

PAVEMENT INTERLOCK

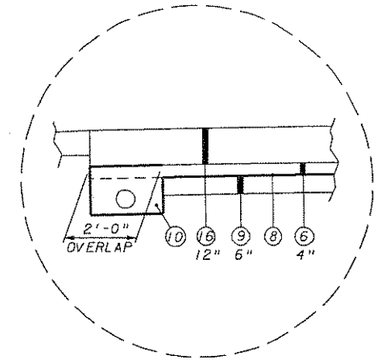

DETAIL "C"

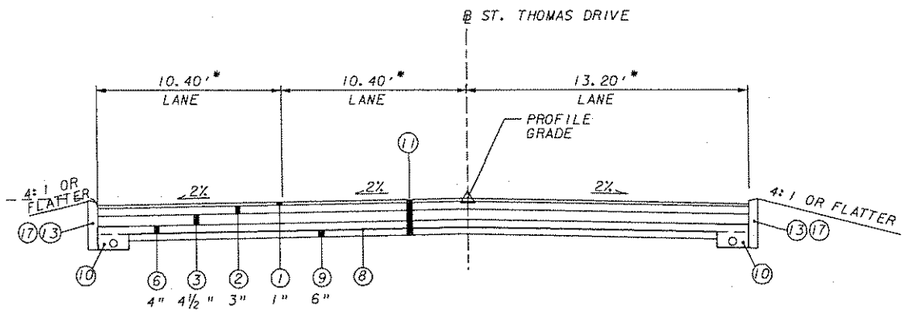

ST. THOMAS DRIVE

STA. 10+90.00 TO STA. 11+74.00

* DOES NOT INCLUDE RADII

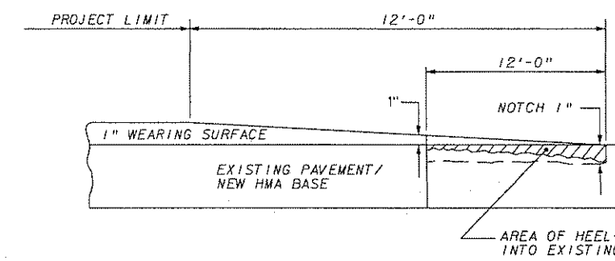

NOTE:
WHEEL RUTS BEYOND THE HEEL IN NOTCH ARE TO BE FILLED AND TRANSITIONED TO MEET FIELD CONDITIONS.

TYPICAL HEEL-IN DETAIL

@ EACH PROJECT LIMIT

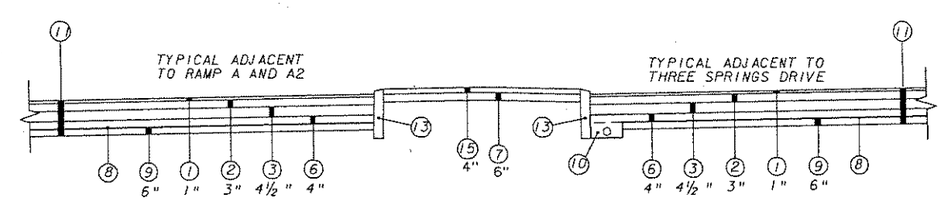

RAISED MEDIAN DETAIL

NOTE:

HEAVY MIX DESIGN SHALL BE USED ON ALL HOT-MIX ASPHALT REQUIRED ON THIS PROJECT.

LEGEND

1. 402001-001 MARSHALL HOT-MIX ASPHALT SKID RESISTANT PAVEMENT, TYPE 4, TN
2. 401001-001 MARSHALL HOT-MIX ASPHALT BASE COURSE, TYPE 2, TN
3. 401001-001 MARSHALL HOT-MIX ASPHALT BASE COURSE, TYPE 1, TN
4. 415005-001 REMOVING EXISTING PAVEMENT SURFACE, SY
5. 408002-001 BITUMINOUS MATERIAL, GA
6. 311006-001 OPEN GRADED FREE DRAINING BASE COURSE, CY
7. 307005-000 AGGREGATE BASE COURSE, CLASS 10, TN
8. 207034-000 FABRIC FOR SEPARATION, SY
9. 207002-000 SUBGRADE, CY
10. 606029-001 FREE DRAINING BASE TRENCH, LF
11. 207001-001 UNCLASSIFIED EXCAVATION, CY
12. 307005-001 AGGREGATE BASE COURSE, CLASS 10, TN
13. 610001-003 PLAIN CONCRETE CURBING, TYPE III, LF
14. 607001-001 TYPE 1 GUARDRAIL, CLASS 1, LF
15. 609001-001 CONCRETE SIDEWALK, SY
16. 501005-012 12 INCH NON-REINFORCED PORTLAND CEMENT CONCRETE PAVEMENT, SY
17. 610001-001 PLAIN CONCRETE CURBING, TYPE 1, LF

REVISION NUMBER	SHEET NUMBER	REVISION	DATE	BY

THE WEST VIRGINIA DEPARTMENT OF TRANSPORTATION
DIVISION OF HIGHWAYS

TYPICAL SECTIONS AND TYPICAL DETAILS

HDR ENGINEERING, INC.
CONSULTING ENGINEERS
WEIRTON, WV (304) 748-8740

Q.C. CHECKED WWK DATE 12/05 P.M. CHECKED SAB DATE

DATE: 12/13/2005

FILE: X:\14361\rdy_typ_350BES01.dgn

PUBLIC ROADS DIV.	STATE DIST. NO.	STATE PROJECT NO.	FEDERAL PROJECT NO.	FISCAL YEAR	COUNTY	SHEET NO.	TOTAL SHEETS
W.V.	6	U305-13-0.02 00	BR-0013 (042)E	2006	BROOKE	9	163

GOVERNING SPECIFICATIONS

THE WEST VIRGINIA DEPARTMENT OF TRANSPORTATION, DIVISION OF HIGHWAYS, STANDARD SPECIFICATIONS ROADS AND BRIDGES, ADOPTED 2000, AS AMENDED BY THE WEST VIRGINIA DEPARTMENT OF TRANSPORTATION, DIVISION OF HIGHWAYS, SUPPLEMENTAL SPECIFICATIONS, DATED JANUARY 1, 2003. THE CONTRACT DOCUMENTS AND THE CONTRACT PLANS ARE THE GOVERNING PROVISIONS APPLICABLE TO THIS PROJECT.

UTILITY VERIFICATIONS

EXISTING UTILITIES SHOWN ON THE PLANS HAVE BEEN LOCATED BASED ON FIELD SURFACE EVIDENCE AND INFORMATION PROVIDED BY THE UTILITY. THE CONTRACTOR SHALL BE RESPONSIBLE FOR FIELD VERIFICATION OF THIS INFORMATION. THE CONTRACTOR IS TO CALL MISS UTILITY BEFORE EXCAVATING.

VERIFICATION OF DIMENSIONS

THE CONTRACTOR IS RESPONSIBLE FOR VERIFICATION OF ALL PLAN AND ELEVATION DIMENSIONS PRIOR TO ORDERING MATERIALS FOR THE CONSTRUCTION OF THE VARIOUS BID ITEMS ON THIS PROJECT.

ARCHAEOLOGICAL FIND

IN THE EVENT OF AN ARCHAEOLOGICAL FIND DURING CONSTRUCTION, WORK WILL BE SUSPENDED AND THE STATE HISTORIC PRESERVATION OFFICER (SHPO) WILL BE CONTACTED BY THE ENGINEER.

CLEARING AND GRUBBING

REMOVAL OF PLANTERS FROM THE PROJECT SHALL TO BE INCLUDED IN THE LUMP SUM BID PRICE FOR ITEM 201001-000 CLEARING AND GRUBBING.

HOT ASPHALT MIX DESIGN

"HEAVY MIX DESIGN" SHALL BE USED ON ALL HOT- MIX ASPHALT USED ON THIS PROJECT.

MILLING AND HOT MIX ASPHALT PAVING EQUIPMENT

MILLING AND PAVING EQUIPMENT SHALL BE EQUIPPED WITH AND USE AUTOMATIC GRADE AND SLOPE CONTROLS.

RUMBLE STRIPS

RUMPLE STRIPS IN PAVED SHOULDERS SHALL BE LOCATED IN THE FOLLOWING AREAS:

1. TYPICAL SHOULDER WIDTH IS 8 FT OR MORE.
2. MEDIAN SHOULDER ON DIVIDED HIGHWAYS, IF TYPICAL SHOULDER IS 3 FT OR GREATER.
3. SHOULDER ADJACENT TO ONE-WAY RAMPS WHICH CONNECT TO ARTERIAL HIGHWAY, IF TYPICAL SHOULDER WIDTH IS 3 FT OR GREATER.
4. SHOULDERS ADJACENT TO CLIMBING LANES ON ARTERIAL HIGHWAYS, IF TYPICAL SHOULDER IS 3 FT OR GREATER.

RUMBLE STRIPS SHALL BE INCLUDED IN THE UNIT PRICE BID AND PAID FOR UNDER ITEM 402001, MARSHALL HOT-MIX ASPHALT SKID RESISTANT PAVEMENT.

FERTILIZER, SEEDING AND MULCHING

ALL DISTURBED SOIL AREAS ARE TO BE SEEDED, MULCHED AND FERTILIZED. SEEDING AND MULCHING WILL BE AS SPECIFIED IN SECTION 642 AND SECTION 652 OF THE STANDARD SPECIFICATIONS. TESTING WILL NOT BE REQUIRED ON THOSE ITEMS WHEN PURCHASED FROM A REPUTABLE DEALER.

DRAINAGE

THE CONTRACTOR SHALL MAINTAIN WORKING STORM DRAINAGE SYSTEMS THROUGH THE WORK AREAS AT ALL TIMES DURING CONSTRUCTION. THE WORKING SYSTEM MAY CONSIST OF THE EXISTING STORM DRAINAGE SYSTEM, THE PROPOSED SYSTEM OR A COMBINATION THEREOF. DRAINAGE PIPES FOR THE PROPOSED SYSTEM SHALL BE CONSTRUCTED IN SECTION LENGTHS NECESSARY TO MAINTAIN THE LANES OF TRAFFIC INDICATED IN THE MAINTENANCE OF TRAFFIC NOTES OR PLANS.

PIPE REMOVAL

ANY EXISTING PIPES THAT ARE REMOVED DURING CONSTRUCTION SHALL BECOME THE PROPERTY OF THE CONTRACTOR. THE COST OF THE REMOVAL OF THE EXISTING PIPES SHALL BE INCLUDED IN THE UNIT PRICE BID AND PAID FOR UNDER ITEM 201001-000. "CLEARING & GRUBBING", AND IS TO INCLUDE REMOVAL, DISPOSAL AND BACKFILL WITH SUITABLE MATERIAL.

PIPE PLUGGING AND CAPPING

THE COST OF PLUGGING AND CAPPING EXISTING AND TEMPORARY PIPES SHALL BE INCLUDED IN THE UNIT PRICE BID AND PAID FOR UNDER ITEM 201001-000, "CLEARING AND GRUBBING".

GUARDRAIL REMOVAL

THE COST OF GUARDRAIL TO BE REMOVED AND NOT RESET SHALL BE INCLUDED IN THE LUMP SUM BID PRICE FOR ITEM 201001-000, "CLEARING AND GRUBBING".

DOUBLE FACED END TERMINAL

DOUBLE FACED END TERMINALS LOCATED ON US 22 AT STA. 119+00 RT. AND STA. 122+62.5 LT. SHALL BE INSTALLED ACCORDING TO THE MANUFACTURER'S RECOMMENDATIONS. YELLOW REFLECTIVE ADHESIVE SHEETING SHALL BE APPLIED TO THE NOSE. COST OF THE DOUBLE FACED END TERMINAL AND REFLECTIVE SHEETING SHALL BE PAID FOR AS ITEM 607067-001, DOUBLE FACED END TERMINAL, PER EACH

UTILITIES

WHEN WORKING NEAR EXISTING UNDERGROUND UTILITIES, EXTREME CAUTION SHOULD BE USED. ALL EXCAVATIONS NEAR THE UNDERGROUND UTILITIES SHALL BE SHORED TO PREVENT MOVEMENT. ANY DAMAGE TO THE UTILITIES WILL BE THE RESPONSIBILITY OF THE CONTRACTOR. THE COST OF THE SHORING SHALL BE INCLUDED IN VARIOUS UTILITY RELOCATION ITEMS.

NOTICE TO CONTRACTORS

THE CONTRACTOR IS RESPONSIBLE FOR VERIFYING THE ORIGINAL CROSS-SECTIONS PRIOR TO THE START OF ANY CONSTRUCTION.

FREE DRAINING BASE

THE CONTRACTOR SHALL NOT PERMIT HEAVY EQUIPMENT TO USE THE ROADBED AFTER THE FREE DRAINING BASE HAS BEEN PLACED. THE SURFACE OF THE FREE DRAINING BASE SHALL NOT BE USED AS A HAUL ROAD.

UNDERDRAIN

UNDERDRAIN PIPE COLLECTOR SYSTEMS CONNECTING TO INLETS SHALL BE PLACED SO THAT THE TOP OF THE UNDERDRAIN PIPE COLLECTOR SHALL BE PLACED AT THE SAME ELEVATION AS THE TOP OF THE OUTLET PIPE.

ACCESS TO PUBLIC AND PRIVATE ROADS

THE CONTRACTOR SHALL MAINTAIN SUITABLE ACCESS TO ALL PUBLIC ROADS, PRIVATE ROADS, AND DRIVEWAYS DURING CONSTRUCTION.

WATER QUALITY

THE CONTRACTOR WILL BE RESPONSIBLE FOR WATER QUALITY THROUGHOUT THE DURATION OF CONSTRUCTION. THE PROJECT ENGINEER WILL WORK CLOSELY WITH THE PROJECT SUPERINTENDENT. THE CONTRACTOR WILL BE RESPONSIBLE FOR THE FOLLOWING:

- DEVELOPING AND IMPLEMENTING AN EFFECTIVE EROSION CONTROL PLAN.
- DIRECTING THE CONSTRUCTION, OPERATION, AND DISMANTLING OF TEMPORARY EROSION CONTROL FEATURES.
- IMPLEMENTING REMEDIAL ACTION REQUIRED TO REPAIR FAILING EROSION AND SEDIMENTATION CONTROL FEATURES.
- IMPLEMENTING STORM AND WINTER SHUTDOWN PROCEDURES.
- SHAPING THE EARTHWORK PRIOR TO THE SUSPENSION OF GRADING OPERATIONS EACH DAY IN A MANNER THAT WILL PERMIT STORM RUNOFF WITH A MINIMUM OF EROSION.
- EROSION CONTROL FEATURES INSTALLED BY THE CONTRACTOR WILL BE OPERATED AND MAINTAINED IN AN ACCEPTABLE CONDITION.
- WHEN ANY EROSION OR SEDIMENT CONTROL FEATURE HAS REACHED HALF OF ITS CAPACITY, THE DEVICE IS TO BE CLEANED OUT AND RESTORED TO ITS ORIGINAL CONDITION.

THE CONTRACTOR WILL BE REQUIRED TO PREPARE A SPILL PREVENTION, CONTROL, AND COUNTERMEASURES (SPCC) PLAN THAT ITEMIZES SPECIFIC MEASURES THAT WILL BE IMPLEMENTED TO PREVENT AND CLEAN UP CHEMICAL AND PETROLEUM PRODUCT SPILLS THAT MAY OCCUR DURING ALL PHASES OF PROJECT CONSTRUCTION. FUEL STORAGE AND REFUELING ACTIVITIES, EQUIPMENT MAINTENANCE ACTIVITIES, AND EQUIPMENT WASHING WILL BE KEPT AT LEAST 500 FEET AWAY FROM ANY PERENNIAL OR INTERMITTENT WATERCOURSE OR WETLAND.

ROCK BORROW EXCAVATION

ITEM 211002-000, ROCK BORROW EXCAVATION SHALL USE A MAXIMUM ROCK SIZE NOT GREATER THAN 6 INCHES IN ANY DIMENSION. THE SELECT EMBANKMENT (SE) SHOWN ON THE CROSS SECTIONS IS TO BE ROCK BORROW EXCAVATION.

REVISION NUMBER	SHEET NUMBER	REVISION	DATE	BY

THE WEST VIRGINIA DEPARTMENT OF TRANSPORTATION
DIVISION OF HIGHWAYS

GENERAL NOTES

HDR ENGINEERING, INC.
CONSULTING ENGINEERS
WEIRTON, WV (304) 748-8740

Q.C. CHECKED WWK DATE 12/05 P.M. CHECKED SAB DATE 12/05

DATE: 12/13/2005

FILE: x:\14361\roy_gms_3508c301.dgn

PUBLIC ROADS DIV.	STATE DIST. NO.	STATE PROJECT NO.	FEDERAL PROJECT NO.	FISCAL YEAR	COUNTY	SHEET NO.	TOTAL SHEETS
W.V.	6	U305-13 -0.02 00	BR-0013 (042)E	2006	BROOKE	10	163

SUMMARY OF ESTIMATED QUANTITIES

ALT. #	ITEM NO.	DESCRIPTION	UNIT	QTY
		ROADWAY		
	201001-000	CLEARING AND GRUBBING	LS	1
	204001-000	MOBILIZATION	LS	1
	207001-001	UNCLASSIFIED EXCAVATION	CY	8,065
	207002-000	SUBGRADE	CY	1,009
	207034-000	FABRIC FOR SEPARATION	SY	7,060
	211002-000	ROCK BORROW EXCAVATION	CY	363
	240001-000	CLEAN CULVERT	LF	249
	240002-000	CLEAN INLET	EA	5
	307001-000	AGGREGATE BASE COURSE, CLASS 1	CY	52
	311006-001	OPEN GRADED FREE DRAINING BASE COURSE	CY	731
	408002-001	BITUMINOUS MATERIAL	GA	253
	415005-001	REMOVE EXISTING PAVEMENT SURFACE	SY	2,877
	501005-012	12 INCH NON-REINFORCED PORTLAND CEMENT CONCRETE PAVEMENT	SY	1,064
	502001-012	12 INCH PORTLAND CEMENT CONCRETE APPROACH SLAB	SY	310
	605004-001	TYPE B INLET	EA	6
	605009-001	TYPE G INLET	EA	1
	605010-001	TYPE H INLET	EA	1
	606029-001	FREE DRAINING BASE TRENCH	LF	2,443
	606030-001	OUTLET PIPE, 6 INCH	LF	410
	607001-001	TYPE 1 GUARDRAIL, CLASS 1	LF	487.5
	607005-001	TYPE 5 GUARDRAIL, CLASS 1	LF	175
	607006-001	THRIE BEAM GUARDRAIL BRIDGE TRANSITION	EA	4
	607009-001	TYPE 1 GUARDRAIL REMOVED AND RESET	LF	443
	607030-001	SPECIAL TRAILING END TERMINAL	EA	4
	607065-001	FLARED END TERMINAL	EA	1
	607067-001	DOUBLE FACED END TERMINAL	EA	2
	609001-001	CONCRETE SIDEWALK	SY	137
	609002-001	BED COURSE MATERIAL	CY	15
	609005-001	SIDEWALK RAMP	EA	2
	610001-001	PLAIN CONCRETE CURBING, TYPE 1	LF	165
	610001-003	PLAIN CONCRETE CURBING, TYPE 11	LF	300
	636007-001	ERADICATION OF PAVEMENT MARKING	LF	2,760
	636008-001	TEMPORARY PAVEMENT MARKING-PAINT 4 IN SOLID LINE	LF	4,000
	636009-001	TEMPORARY PAVEMENT MARKING-TAPE 4 IN SOLID LINE	LF	7,850
	636011-001	TRAFFIC CONTROL DEVICE	UN	18,080
	636012-010	PROJECT TRAFFIC CONTROL DEVICE CLEANING	EA	3
	636013-001	INDIVIDUAL TRAFFIC CONTROL DEVICE CLEANING	EA	140
	636014-001	FLAGGER	HR	800
	636014-002	TRAFFIC DIRECTOR	HR	800
	636017-001	TEMPORARY CONCRETE BARRIER	LF	2,250
	636018-001	REMOVE AND RESET TEMPORARY CONCRETE BARRIER	LF	625
	636019-001	TEMPORARY GUARDRAIL BARRIER	LF	170
	636021-001	ELECTRIC ARROW	DA	560
	636022-001	CHANGAEBLE MESSAGE SIGN	DA	560
	636025-001	WARNING LIGHTS, TYPE B	DA	4,200
	636025-001	WARNING LIGHTS, TYPE C	DA	6,440
	637001-001	WATER FOR DUST PALLIATIVE	MG	17
	638002-001	RIGHT OF WAY MARKER	EA	6
	638004-001	OUTLET MARKER	EA	2
	639001-001	CONSTRUCTION LAYOUT STAKE	LS	1
	640003-001	BUILDING EQUIPMENT	LS	1
	640006-001	SMALL FIELD OFFICE	MO	18

SUMMARY OF ESTIMATED QUANTITIES

ALT. #	ITEM NO.	DESCRIPTION	UNIT	QTY
		ROADWAY		
	642004-001	SEED MIXTURE, TEMPORARY	LB	108
	642004-002	SEED MIXTURE, B	LB	139
	642004-003	SEED MIXTURE, D	LB	28
	642005-001	MULCH, STRAW OR HAY	TN	3.6
	642006-001	FERTILIZER	TN	0.7
	642007-001	FIBER MATTING	SY	280
	642010-001	AGRICULTURAL LIMESTONE	TN	2.7
	642011-001	HAY OR STRAW BALE	EA	223
	642012-001	SILT FENCE	LF	5,268
	642031-001	DITCH CHECK	EA	59
	642033-001	SEDIMENT TRAP	CY	265
	642036-001	SEDIMENT REMOVAL	CY	265
	642040-001	INLET PROTECTION	EA	9
	652001-001	AGRICULTURAL LIMESTONE	TN	2.7
	652002-001	FERTILIZER, 10-20-10	TN	0.9
	652002-002	FERTILIZER, UREA FORMALDEHYDE	TN	0.3
	652003-001	SEED MIXTURES, B, C-1, OR C-2	LB	135
	652003-002	SEED MIXTURE, D	LB	30
	652004-001	STRAW OR HAY MULCH	TN	3.6
	655002-001	PERMANENT EROSION MATTING, TYPE A	SY	146
	664001-008	IMPACT ATTENUATING DEVICE, TYPE IV	EA	4
	664001-009	REMOVE AND RESET G.R.E.A.T. ATTENUATOR DEVICE	EA	2
	699000-001	ON JOB TRAINING	HR	1000
		ROADWAY ALTERNATES		
AA1	307005-001	AGGREGATE BASE COURSE, STONE OR GRAVEL, CLASS 10	TN	372
AA2	307005-002	AGGREGATE BASE COURSE, SLAG, CLASS 10	TN	355
AA3	307005-003	AGGREGATE BASE COURSE, STEEL SLAG, CLASS 10	TN	394
BB1	401001-001	MARSHALL HOT-MIX ASPHALT BASE COURSE, STONE OR GRAVEL, TYPE 1	TN	1,246
BB2	401001-002	MARSHALL HOT-MIX ASPHALT BASE COURSE, SLAG, TYPE 1	TN	1,190
BB3	401001-003	MARSHALL HOT-MIX ASPHALT BASE COURSE, STEEL SLAG, TYPE 1	TN	1,322
CC1	401001-001	MARSHALL HOT-MIX ASPHALT BASE COURSE, STONE OR GRAVEL, TYPE 2	TN	1,138
CC2	401001-002	MARSHALL HOT-MIX ASPHALT BASE COURSE, SLAG, TYPE 2	TN	1,086
CC3	401001-003	MARSHALL HOT-MIX ASPHALT BASE COURSE, STEEL SLAG, TYPE 2	TN	1,206
DD1	402001-001	MARSHALL HOT-MIX ASPHALT SKID RESISTANT PAVEMENT, STONE OR GRAVEL, TYPE 4	TN	512
DD2	402001-002	MARSHALL HOT-MIX ASPHALT SKID RESISTANT PAVEMENT, SLAG, TYPE 4	TN	488
DD3	402001-003	MARSHALL HOT-MIX ASPHALT SKID RESISTANT PAVEMENT, STEEL SLAG, TYPE 4	TN	543
EE1	604076-016	18 INCH ALUMINUM COATED CORRUGATED STEEL PIPE, A2	LF	388
EE1	604009-016	18 INCH CORRUGATED STEEL PIPE END SECTION	EA	2
EE2	604037-016	18 INCH REINFORCED CONCRETE PIPE, CLASS 11	LF	388
EE2	604038-016	18 INCH REINFORCED CONCRETE PIPE END SECTION	EA	2
FF1	636002-001	AGGREGATE FOR MAINTAINING TRAFFIC, STONE OR GRAVEL	TN	20
FF2	636002-002	AGGREGATE FOR MAINTAINING TRAFFIC, SLAG	TN	19

REVISION NUMBER	SHEET NUMBER	REVISION	DATE	BY

THE WEST VIRGINIA DEPARTMENT OF TRANSPORTATION
DIVISION OF HIGHWAYS

SUMMARY OF ESTIMATED QUANTITIES

HDR ENGINEERING, INC.
CONSULTING ENGINEERS
WEIRTON, WV (304) 748-8740

Q.C. CHECKED WWK DATE 12/05 | P.M. CHECKED SAB DATE 12/05

DATE: 2/2/2006

FILE: v:\14361\dy_soq_350bridge1.dgn

PUBLIC ROADS DIV.	STATE DIST. NO.	STATE PROJECT NO.	FEDERAL PROJECT NO.	FISCAL YEAR	COUNTY	SHEET NO.	TOTAL SHEETS
W.V.	6	U305-13 -0.02 00	BR-0013 (042)E	2006	BROOKE	11	163

SUMMARY OF ESTIMATED QUANTITIES

ALT. #	ITEM NO.	DESCRIPTION	UNIT	QTY
		SIGNING		
	657006-001	S4X7.7, A-441 SUPPORT, GALVANIZED	LF	36
	657006-005	W6X12, A-441 SUPPORT, GALVANIZED	LF	137
	657010-001	3.00 LB CHANNEL POST	LF	280
	657017-001	CLASS B CONCRETE FOOTING, REINFORCED, ROADSIDE	CY	4.8
	657018-001	POST REMOVAL	EA	24
	658001-001	CLASS B CONCRETE FOOTING, REINFORCED, OVERHEAD	CY	15.9
	658002-001	OVERHEAD SIGN, STEEL-ALUMINUM COMBINATION, 01	EA	1
	658003-001	OVERHEAD SIGN, GALVANIZED STEEL, 02	EA	1
	659001-001	SIGN LIGHTING, TYPE 3, 01	LS	1
	659001-001	SIGN LIGHTING, TYPE 3, 02	LS	1
	661001-001	0.080 IN FLAT SHEET SIGN	SF	190
	661002-001	EXTRUDED PANEL SIGN	SF	137
	661004-001	DELINEATOR, REFLEX REFLECTOR, SINGLE WHITE	EA	4
	661006-001	DELINEATOR, NINE PER UNIT, YELLOW	UN	1
	661008-001	DELINEATOR BRACKET, TYPE C	EA	4
	661011-001	INSTALLATION OF REUSABLE SIGN	EA	13
	661013-001	PLASTIC DELINEATOR POST, WHITE	EA	39
	661013-001	PLASTIC DELINEATOR POST, YELLOW	EA	8
	663001-004	EDGE LINE, TYPE II, WHITE	LF	4,000
	663001-004	EDGE LINE, TYPE II, YELLOW	LF	875
	663002-005	LANE LINE OR CENTERLINE, TYPE II, WHITE	LF	425
	663002-005	LANE LINE OR CENTERLINE, TYPE II, YELLOW	LF	30
	663003-005	BARRIER LINE, TYPE II	LF	2,800
	663004-004	CHANNELIZING LINE, TYPE II, WHITE (8")	LF	715
	663005-010	STOP LINE, TYPE V (24")	LF	140
	663007-010	STRIPE, TYPE V, WHITE (12")	LF	475
	663007-010	STRIPE, TYPE V, YELLOW (12")	LF	360
	663008-005	YIELD TRIANGLE, TYPE V	EA	10
	663010-010	LANE ARROW, TYPE V	EA	11
	663011-010	LANE LETTER, TYPE V	EA	20
		SIGNAL		
	660001-002	SIGNAL CONTROLLER, INSTALLATION ONLY	LS	1
	660003-007	SIGNAL SECTION, INSTALLATION ONLY, V-12	EA	9
	660004-041	SIGNAL SUPPORT, INSTALLATION ONLY, C1	EA	1
	660007-001	MISCELLANEOUS SIGNAL	LS	1
		LIGHTING		
	662002-001	GALVANIZED STEEL CONDUIT, 01	LS	1
	662002-001	GALVANIZED STEEL CONDUIT, 02	LS	1
	662006-001	JUNCTION BOX, TYPE B	EA	5
	662006-001	JUNCTION BOX, TYPE H, 18" X 18"	EA	12
	662007-001	LUMINAIRE, 250W	EA	14
	662008-001	CABLE, 01	LS	1
	662008-001	CABLE, 02	LS	1
	662010-001	LIGHTING SUPPORT, TYPE 1, (40-10)	EA	1
	662010-001	LIGHTING SUPPORT, TYPE 1, (40-15)	EA	6
	662013-001	SERVICE AND CONTROL STATION, 01	LS	1
	662013-001	SERVICE AND CONTROL STATION, 02	LS	1
	662014-001	INCIDENTAL ELECTRICAL WORK	LS	1
	662015-001	ELECTRICAL TEST, 01	LS	1
	662015-001	ELECTRICAL TEST, 02	LS	1
		COMPUTER SYSTEM		
	640004-001	COMPUTER SYSTEM FOR FIELD OFFICE	LS	1

SUMMARY OF ESTIMATED QUANTITIES

ALT. #	ITEM NO.	DESCRIPTION	UNIT	QTY
		BRIDGE # 10565		
	203001-000	DISMANTLING STRUCTURE	LS	1
	212001-000	STRUCTURE EXCAVATION	CY	135
	212003-000	ROCK EXCAVATION	CY	94
	212005-000	SELECT MATERIAL FOR BACKFILLING	CY	246
	218004-001	8 INCH CRUSHED ROCK SLOPE PROTECTION	SY	801
	601002-001	CLASS B CONCRETE	CY	196
	601002-003	CLASS B CONCRETE, ARCHITECTURAL	CY	108
	601009-001	CLASS H CONCRETE	CY	558
	601009-003	CLASS H CONCRETE, ARCHITECTURAL	CY	122
	601014-001	TEST SLAB	LS	1
	602001-001	REINFORCING STEEL BAR	LB	33,824
	602002-001	EPOXY COATED REINFORCING STEEL BAR	LB	140,186
	614001-004	HP10X57 STEEL PILE	LF	497
	615001-001	STEEL SUPERSTRUCTURE	LS	1
	615029-001	NON-GUIDED BEARING, ELASTOMERIC	EA	14
	615075-001	MISCELLANEOUS BRIDGE WORK, BRIDGE REPAIR	LS	1
	617003-001	ALUMINUM RAILING	LF	248
	639001-001	CONSTRUCTION LAYOUT STAKE	LS	1

THE WEST VIRGINIA DEPARTMENT OF TRANSPORTATION
DIVISION OF HIGHWAYS

SUMMARY OF ESTIMATED QUANTITIES

REVISION NUMBER	SHEET NUMBER	REVISION	DATE	BY

HDR ENGINEERING, INC.
CONSULTING ENGINEERS
WEIRTON, WV (304) 748-8740

Q.C. CHECKED WWK DATE 12/05 | P.M. CHECKED SAB DATE 12/05

DATE: 2/8/2006

FILE: v:\14351\rdy_eng_3508ca01.dgn

PUBLIC ROADS DIV.	STATE DIST. NO.	STATE PROJECT NO.	FEDERAL PROJECT NO.	FISCAL YEAR	COUNTY	SHEET NO.	TOTAL SHEETS
W.V.	6	U305-13-0.02 00	BR-0013 (042)E	2006	BROOKE	12	163

CLEARING & GRUBBING / SEEDING & MULCHING

LOCATION STATION	LOCATION STATION	ITEM 201001-000 CLEARING AND GRUBBING S.F.	ITEM 201001-000 ACRES	ITEM 652 SEEDING AND MULCHING S.F.	ITEM 652 ACRES	ITEM 652001-001 AGRI-CULTURAL LIMESTONE TON	ITEM 652002-001 FERTILIZER 10-20-10 TON	ITEM 652002-002 UREA FORMAL-DEHYDE FERTILIZER TON	ITEM 652003-001 SEED MIXTURE B, C-1, OR C-2 LB.	ITEM 652003-002 SEED MIXTURE D LB.	ITEM 652004-001 STRAW OR HAY MULCH TON	ITEM 652003-003 WETLAND SEED TYPE K LBS.	REMARKS
CR 13													
101+00 TO 107+00		57,400	1.32	24,225	0.56	0.83	0.28	0.08	43	8	1.1		
107+00 TO 114+33		61,296	1.41	19,182	0.44	0.66	0.22	0.07	31	9	0.9		
RAMP A													
40+00 TO 41+68		5,950	0.14	3,675	0.08	0.13	0.04	0.01	8	1	0.2		
RAMP A2													
50+00 TO 52+89		11,506	0.26	9,281	0.21	0.32	0.11	0.03	11	7	0.4		
RAMP B													
60+50 TO 64+98		29,891	0.69	14,100	0.32	0.49	0.16	0.05	24	5	0.6		
RAMP D													
30+00 TO 32+77		14,020	0.32	8,239	0.19	0.28	0.09	0.03	18	0	0.4		
ST THOMAS													
10+70 TO 11+50		361	0.01	72	0.00	0.00	0.00	0.00	0	0	0.0		
TOTALS		180,424	4.15	78,774	1.80	2.7	0.9	0.3	135	30	3.6		

TEMPORARY POLLUTION CONTROL

LOCATION STATION	LOCATION STATION	ITEM 642001-001 TEMPORARY BERMS L.F.	ITEM 642002-001 SLOPE DRAINS L.F.	ITEM 642004-001 TEMPORARY SEED LBS.	ITEM 642004-002 SEED MIXTURE B LBS.	ITEM 642004-003 SEED MIXTURE D LBS.	ITEM 642005-001 STRAW OR HAY MULCH TON	ITEM 642005-002 WOOD CELL. FIBER MULCH TON	ITEM 642006-001 FERTILIZER TON	ITEM 642007-001 FIBER MATTING S.Y.	ITEM 642008-001 TEMPORARY PIPE L.F.	ITEM 642009-001 CONTOUR DITCH L.F.	ITEM 642010-001 AGRICULTURAL LIMESTONE TON	ITEM 642011-001 HAY OR STRAW BALES EA.	ITEM 642012-001 SILT FENCE L.F.	ITEM 642015-001 SUPER SILT FENCE L.F.	ITEM 642031-001 DITCH CHECKS EA.	ITEM 642032-001 CHECK DAMS EA.	ITEM 642033-001 SEDIMENT TRAP C.Y.	ITEM 642036-001 SEDIMENT REMOVAL C.Y.	ITEM 642040-001 INLET PROTECTION EA.	ITEM 642041-001 CULVERT PROTECTION EA.	ITEM 642042-001 FLOCCULANT BLOCK EA.	ITEM 642043-001 PRE-MANUFACTURED DITCH CHECK EA.	ITEM 642045-001 TURBIDITY CURTAIN S.Y.
CR 13																									
101+00	107+00			33.6	44.1	7.7	1.1		0.2				0.8	50	1200		10		60	60	2				
107+00	114+33			26.4	31.4	8.4	0.9		0.2				0.7	62	1466		7		73	73	3				
Ramp A																									
40+00	41+65			4.8	7.9		0.2						0.1	14	330		6		17	17					
Ramp A2																									
50+23	52+89			12.6	10.8	7.0	0.4		0.1	112			0.3	23	532		9		27	27					
Ramp B																									
60+31	64+99			19.2	24.5	4.9	0.6		0.1	168			0.5	39	936		21		47	47					
RAMP D																									
29+50	32+75			11.4	18.7		0.4		0.1				0.3	28	650		6		33	33					
ST THOMAS																									
10+73	11+50			0.1	1.5									7	154				8	8	4				
TOTAL				108	139	28	3.6		0.7	280			2.7	223	5268		59		265	265	9				

PERMANENT EROSION MATTING

LOCATION STATION	LOCATION STATION	LENGTH LEFT	LENGTH RIGHT	WIDTH	ITEM 655002-001 S.Y.	REMARKS
113+11	113+25	20		3	7	CR 13
62+00	64+50	250		5	139	RAMP B
TYPE A		146				
TYPE B		0				

REVISION NUMBER	SHEET NUMBER	REVISION	DATE	BY

THE WEST VIRGINIA DEPARTMENT OF TRANSPORTATION
DIVISION OF HIGHWAYS

QUANTITY TABLES

HDR ENGINEERING, INC.
CONSULTING ENGINEERS
WEIRTON, WV (304) 748-8740

Q.C. CHECKED WWK DATE 12/05 P.M. CHECKED SAB DATE 12/05

DATE: 12/13/2005

FILE: s:\14.361\-dy_qnt_350Bex01.dgn

PUBLIC ROADS DIV.	STATE DIST. NO.	STATE PROJECT NO.	FEDERAL PROJECT NO.	FISCAL YEAR	COUNTY	SHEET NO.	TOTAL SHEETS
W.V.	8	U305-13-0.02 00	BR-0013 (042)E	2006	BROOKE	13	163

PAVING QUANTITIES HOT - MIX ASPHALT

ROADWAY	LOCATION STATION	LOCATION STATION	LENGTH	ITEM 207002-000 SUBGRADE C.Y.	ITEM 207034-000 FABRIC FOR SEPARATION S.Y.	ITEM 307001-000 CL. I AGGREGATE C.Y.	ITEM 307005-001 PRIN. CL. 10 AGGREGATE TON	ITEM 307005-002 ALT. 1 CL. 10 SLAG TON	ITEM 307005-003 ALT. 2 CL. 10 ST. SLAG TON	ITEM 311006-001 FREE DRAINING BASE C.Y.	ITEM 401001-001 PRIN. STONE OR GRAVEL TYPE 1 TON	ITEM 401001-002 ALT. 1 SLAG TYPE 1 TON	ITEM 401001-003 ALT. 2 STEEL SLAG TYPE 1 TON	ITEM 401001-001 PRIN. STONE OR GRAVEL TYPE 2 TON	ITEM 401001-002 ALT. 1 SLAG TYPE 2 TON	ITEM 401001-003 ALT. 2 STEEL SLAG TYPE 2 TON	ITEM 402001-001 PRIN. STONE OR GRAVEL TYPE 4 TON	ITEM 402001-002 ALT. 1 SLAG TYPE 4 TON	ITEM 402001-003 ALT. 2 STEEL SLAG TYPE 4 TON	ITEM 408002-001 BIT. MAT. TACK COAT GAL.	ITEM 415005-001 REMOVE EXISTING PAVE. SUR. S.Y.	ITEM 606029-001 FDB TRENCH L.F.	REMARKS
CR 13	101+00.00	114+61.00	1,361	585	3,828	0	254	243	270	405	902	861	957	766	731	812	349	333	370	192	1,927	1,159	
RAMP A	40+00.00	41+68.46	168	63	292	0	17	16	18	48	52	50	55	65	62	69	23	22	25	7	216	99	
RAMP A2	50+23.57	52+88.91	265	68	544	0	24	23	25	52	115	110	122	77	73	81	26	25	27	0	0	265	
RAMP C	70+18.00	70+65.00	47	0	0	0	7	6	7	0	0	0	0	15	14	15	10	9	10	5	197	0	
RAMP D	30+00.00	32+75.99	276	19	226	0	18	17	19	55	42	40	44	111	106	118	36	34	38	19	347	134	
RAMP D SPUR	80+18.00	80+65.00	47	0	0	0	3	3	3	0	0	0	0	10	10	11	7	7	7	4	126	0	
ST. THOMAS DRIVE	10+73.00	11+74.40	101	72	624	0	0	0	0	53	118	113	126	84	80	89	30	28	32	16	64	207	
RAMP B (CONCRETE)	60+28.59	64+98.15	470	150	1,546	0	29	28	31	118	0	0	0	0	0	0	0	0	0	0	0	579	
APPROACH SLAB 1	106+16.58	106+38.08	22	26		26											16	15	17	5			
APPROACH SLAB 2	108+58.58	108+80.08	22	26		26											16	15	17	5			
MOT PHASE 1	105+60.00	109+90.00	430								17	16	18	10	10	11							
US 22 SHOULDERS	118+00.00	123+00.00	500				20	19	21														
TOTAL				1,009	7,060	52	372	355	394	731	1,246	1,190	1,322	1,138	1,086	1,206	512	488	543	253	2,877	2,443	

PAVING QUANTITIES CONCRETE

ROADWAY	LOCATION STATION	LOCATION STATION	LENGTH	ITEM 207002-000 SUBGRADE C.Y.	ITEM 207034-000 FABRIC FOR SEPARATION S.Y.	ITEM 307005-001 PRIN. CL. 10 AGG. AGGREGATE TON	ITEM 307005-002 ALT. 1 CL. 10 AGG. AGGREGATE TON	ITEM 307005-003 ALT. 2 CL. 10 AGG. AGGREGATE TON	ITEM 311006-001 FREE DRAINING BASE TON	ITEM 501005-012 NON-REINF. CONCRETE PAVEMENT S.Y.	ITEM 606029-001 FDB TRENCH L.F.	ITEM 502001-012 CONCRETE APPROACH SLAB S.Y.	ITEM 609001-004 CONCRETE SIDEWALK S.Y.	ITEM 609002-001 BED COURSE MATERIAL C.Y.	ITEM 609005-001 SIDEWALK RAMP EA.	REMARKS
RAMP B	60+28.59	64+98.15	470	150	1,546	29	28	31	118	1,064	579					
APPROACH SLAB 1	106+16.58	106+38.08	22									155				
APPROACH SLAB 2	108+58.58	108+80.08	22									155				
ISLAND	51+23	51+74											137	15	2	
TOTAL				150*	1546*	29*	28*	31*	118*	1064	579*	310	137	15	2	

* - SEE PAVING QUANTITIES HOT-MIX ASPHALT TABLE

THE WEST VIRGINIA DEPARTMENT OF TRANSPORTATION
DIVISION OF HIGHWAYS

QUANTITY TABLES

REVISION NUMBER	SHEET NUMBER	REVISION	DATE	BY

HDR ENGINEERING, INC.
CONSULTING ENGINEERS
WEIRTON, WV (304) 748-8740

Q.C. CHECKED WWK DATE 12/05 | P.M. CHECKED SAB DATE 12/05

DATE: 12/13/2005

FILE: k:\14361\dgn\qnt_350R6501.dgn

PUBLIC ROADS DIV.	STATE DIST. NO.	STATE PROJECT NO.	FEDERAL PROJECT NO.	FISCAL YEAR	COUNTY	SHEET NO.	TOTAL SHEETS
W.V.	8	U305-13 -0.02 00	BR-0013 (042)E	2006	BROOKE	14	163

NOTE: UNSUITABLE MATERIAL IS COMPRISED OF TOPSOIL, PAVEMENT, SOD, TRASH, ORGANIC SUBSTANCES, MUCK, AND ANY OTHER MATERIAL THAT CANNOT BE COMPACTED TO A STABLE AND DURABLE CONDITION.

GRADING SUMMARY

LOCATION STATION	LOCATION STATION	TOTAL UNCLASS. EXCAV. ITEM 207001-001 C.Y.	UNSUIT. EXCAV. C.Y.	USABLE EXCAV. C.Y.	SHRINK OR SWELL C.Y.	ADJUST. EXCAV. C.Y.	UNCLASS. EMBANK. C.Y.	SELECT EMBANK. C.Y.	TOTAL EMBANK. C.Y.	EXCESS (+) OR BORROW (-) C.Y.	REMARKS
CR 13											
101+00	107+00	1474	269	1205	0.95	1145	174	417	591	971	
107+00	114+33	3419	122	3297	0.95	3132	243	0	243	3054	
Ramp A											
40+00	00+00	63	6	56	0.95	54	0	0	0	56	
Ramp A2											
50+23	52+89	1026	131	895	0.95	850	0	0	0	895	
Ramp B											
60+31	64+99	1684	0	1684	0.95	1600	0	0	0	1684	
Ramp D											
29+50	32+75	156	0	156	0.95	149	0	0	0	156	
St. Thomas											
10+73	11+50	243	0	243	0.95	231	0	0	0	243	
TOTAL		8065	528	7536		7161	417	417	834	7059	

BORROW COMPUTATIONS *

SELECT EMBANKMENT REQUIRED (FROM TABLE "GRADING SUMMARY") = 417 C.Y.

SELECT EMBANKMENT AVAILABLE (FROM TABLE "PROBABLE SOURCE OF SELECT EMBANKMENT") = 0 C.Y.

SELECT EMBANKMENT NEEDED = 417 C.Y.

ROCK BORROW EXCAVATION REQUIRED TO MEET SELECT EMBANKMENT REQUIREMENTS WITH 15% SWELL FACTOR :

ITEM 211002-000, ROCK BORROW EXCAVATION = $\frac{\text{SELECT EMBANKMENT NEEDED}}{1+0.15}$ = 363 C.Y.

UNCLASSIFIED EMBANKMENT REQUIRED (FROM TABLE "GRADING SUMMARY") = 417 C.Y.

ADJUSTED EXCAVATION (FROM TABLE "GRADING SUMMARY") = 8065 C.Y.

SELECT EMBANKMENT AVAILABLE (FROM TABLE "PROBABLE SOURCE OF SELECT EMBANKMENT") = 0 C.Y.

8065 C.Y.

EMBANKMENT NEEDED = -7648 C.Y.

EXCAVATION REQUIRED TO MEET EMBANKMENT REQUIREMENTS WITH 5% SHRINK FACTOR:

ITEM 211001-000, UNCLASSIFIED BORROW EXCAVATION = $\frac{\text{EMBANKMENT NEEDED}}{1-0.05}$ = 0 C.Y.

* FOR INFORMATION ONLY

PIPE CULVERT SUMMARY

STATION TO STATION	ALTERNATE 1 604076-A2 604037-CLASS II -016 18" L.F.	-020 24" L.F.	-022 30" L.F.	-024 36" L.F.		ALTERNATE 2 604076-A7 604037-CLASS II -016 18" L.F.	-020 24" L.F.	-022 30" L.F.	-024 36" L.F.		TYPE H INLET 605010 -001 EA.	TYPE B INLET 605004 -001 EA.	TYPE G INLET 605009 -001 EA.	18" CMP NO ALT. 604076 -016 A2 L.F.	TYPE A MANHOLE 605001 -001 EA.	ALT. 2 18" END SECTION 604038 -016 EA.	ALT. 1 18" CMP END SECTION 604009 -016 EA.	CLASS B CONCRETE 601002 -001 C.Y.	WINGWALL (INFO. ONLY) EA.	CLEAN CULVERT 240001 -001 L.F.	CLEAN INLET 240002 -001 EA.	COMMENTS
106+14.00 LT TO 106+14.00 RT	62											1										
106+14.00 RT TO 106+00.30 RT	22											1				1	1					
108+83.00 LT TO 108+83.00 RT	62											1										
108+83.00 RT TO 109+01.30 RT	37											1				1	1					
11+35.80 RT TO 11+52.50 LT	67												1									
11+52.50 LT TO 114+32.88 LT	45										1											
10+90.00 RT TO 10+90.00 LT	32											1										
10+90.00 LT TO 11+52.50 LT	61											1										
100+88.00 LT TO 101+15.00 LT																				29	2	18" PIPE
114+33.00 LT TO 114+98.00 LT																				64	1	18" PIPE
11+498.00 LT TO 114+98.00 RT																				80	1	24" PIPE
29+27.00 LT TO 29+74.00 LT																				76	1	18" PIPE
TOTALS	388	0	0	0	0	0	0	0	0	0	1	6	1	0	0	2	2	0	0	249	5	

REVISION NUMBER	SHEET NUMBER	REVISION	DATE	BY

THE WEST VIRGINIA DEPARTMENT OF TRANSPORTATION
DIVISION OF HIGHWAYS

QUANTITY TABLES

HDR ENGINEERING, INC.
CONSULTING ENGINEERS
WEIRTON, WV (304) 748-8740

Q.C. CHECKED WWK DATE 12/05 P.M. CHECKED SAB DATE 12/05

DATE: 2/2/2006

FILE: w:\14.361\rdy_qnt_3508es01.dgn

PUBLIC ROADS DIV.	STATE DIST. NO.	STATE PROJECT NO.	FEDERAL PROJECT NO.	FISCAL YEAR	COUNTY	SHEET NO.	TOTAL SHEETS
W.V.	8	U305-13 -0.02 00	BR-0013 (042)E	2006	BROOKE	15	163

GUARDRAIL

LOCATION STATION	LOCATION STATION	ITEM 607001-001 TYPE 1, CLASS 1 LEFT	ITEM 607001-001 TYPE 1, CLASS 1 RIGHT	ITEM 607005-001 TYPE 5, CLASS 1 LEFT	ITEM 607005-001 TYPE 5, CLASS 1 RIGHT	FOR INFO. ONLY BUFFER END SECTION	ITEM 607030-001 S.T.E.T.	ITEM 607065-001 FLARED END TERMINAL	ITEM 607067-001 DOUBLE FACED END TERMINAL	ITEM 607006-001 THRIE BEAM GUARDRAIL BRIDGE TRANS.	REMARKS
105+55.83	106+24.58	50					1			1	
105+55.83	106+24.58		12.5					1		1	
108+73.08	110+15.08	137.5				1				1	
108+73.08	109+41.83		50				1			1	
119+00.00	120+50.00			112.50			1		1		DOUBLE FACED GUARDRAIL
120+50.00	121+62.50	112.5									US 22 GUARDRAIL
120+39.50	121+62.50		125				1				US 22 GUARDRAIL
121+62.50	122+62.50				62.5				1		DOUBLE FACED GUARDRAIL
TOTAL		487.5		175		1	4	1	2	4	

GUARDRAIL-REMOVE, RESET AND/OR STORED

REMOVE AND/OR RESET ITEM 607009-001 (TYPE 1) STATION	STATION	LEFT L.F.	RIGHT L.F.	RESET STATION	STATION	LEFT L.F.	RIGHT L.F.	REMARKS
110+65.00	114+33.00		368					CR 13
60+48.00	61+23.00	75						RAMP B
TOTAL		443						

CONCRETE CURB

LOCATION STATION	STATION	LENGTH LEFT L.F.	LENGTH RIGHT L.F.	TYPE	REMARKS
106+06.58	106+16.58	10		1	
106+06.58	106+24.58		18	1	
108+80.08	108+90.08	10		1	
108+72.08	108+90.08		18	1	
110+50.00		176		111	ISLAND
114+33.00	114+45.50	15		1	
10+85.00	11+23.55		63	111	
11+23.55	113+08.87		39	1	
10+85.00	11+45.67	61		111	
11+45.67	114+45.50	55		1	
TOTAL TYPE 1		165			ITEM 610001-001
TOTAL TYPE 111		300			ITEM 610001-003

FREE DRAINING BASE TRENCH

LOCATION STATION	STATION	LENGTH LEFT L.F.	LENGTH RIGHT L.F.	REMARKS
101+00.00	101+57.00		57	
101+00.00	106+16.00	516		
102+58.00	104+23.00		165	
105+74.00	106+16.00		42	
108+80.00	110+02.00		122	
108+84.00	110+07.00	123		
111+10.00	111+55.00		45	
112+20.00	113+09.00	89		
40+69.00	41+68.00		99	RAMP A
50+23.00	52+88.00	265		RAMP A2
60+28.00	64+98.00		470	RAMP B
60+28.00	61+00.00	109		RAMP B
30+55.00	31+25.40	70		RAMP D
32+12.00	32+76.00		64	RAMP D
10+90.00	11+74.00	97		ST THOMAS
10+90.00	11+74.00		110	ST THOMAS
TOTAL		2443*		

* FOR INFORMATION ONLY
SEE PAVING QUANTINTY TABS
FOR TOTALS.

OUTLET PIPE, 6"

STATION	LT. / RT.	ITEM 606030-001 LENGTH	45° BENDS	REMARKS
101+00.00	LT	20		TIE TO INLET
101+00.00	RT	10		
102+65.00	RT	48		
103+30.00	LT	25		
103+72.00	LT	10		
104+75.00	LT	15		
109+31.71	LT	17		
109+31.71	RT	30		
109+56.71	LT	17		LOW POINT
109+56.71	RT	35		LOW POINT
109+81.71	LT	17		
109+81.71	RT	30		
111+55.00	RT	15		
112+00.00	LT	25		
114+33.00	LT	2		TIE TO INLET
11+40.00	RT	15		TIE TO INLET
11+52.00	LT	2		TIE TO INLET
32+15.00	RT	15		
41+20.00	RT	17		
50+23.00	LT	10		
61+00.00	LT	10		
62+31.00	RT	15		
65+00.00	RT	10		
TOTAL		410		

RIGHT OF WAY MARKERS

ITEM 638002-001

STATION	OFFSET LEFT	OFFSET RIGHT	REMARKS
101+08	42		
101+08	70		
106+32	70		
112+38	73		
113+20	75		
113+41	107		
TOTAL	6		

OUTLET MARKER

ITEM 638004-000

STATION	OFFSET LT	OFFSET RT	REMARKS
95+75	65		
131+50		250	
TOTAL	2		

THE WEST VIRGINIA DEPARTMENT OF TRANSPORTATION
DIVISION OF HIGHWAYS

QUANTITY TABLES

REVISION NUMBER	SHEET NUMBER	REVISION	DATE	BY

HDR ENGINEERING, INC.
CONSULTING ENGINEERS
WEIRTON, WV (304) 748-8740

Q.C. CHECKED WWK DATE 12/05 P.M. CHECKED SAB DATE 12/05

DATE: 12/13/2005

FILE: x:\14361\rdy_ant_350Bes01.dgn

PUBLIC ROADS DIV.	STATE DIST. NO.	STATE PROJECT NO.	FEDERAL PROJECT NO.	FISCAL YEAR	COUNTY	SHEET NO.	TOTAL SHEETS
W.V.	6	U305-13 -0.02 00	BR-0013 (042)E	2006	BROOKE	16	163

EXISTING STRUCTURE FOR MAINTAINING TRAFFIC

THIS ITEM SHALL INVOLVE PROVIDING MATERIALS, LABOR, AND EQUIPMENT THAT WILL ESTABLISH A CONTINGENCY PLAN FOR THE EVENT OF A DECK REPAIR.

THE CONTRACTOR SHALL BE REQUIRED TO REPAIR ALL DECK HOLES.

THE REPAIRS SHALL BE SUBJECT TO THE FOLLOWING REQUIREMENTS AND LIMITATIONS:

1.) THE ENGINEER SHALL BE THE SOLE AUTHORITY IN DETERMINING THE NEED FOR DECK HOLE REPAIR.

2.) THERE SHALL BE NO LIMIT TO THE NUMBER OF DECK HOLES THAT THE CONTRACTOR SHALL BE REQUIRED TO REPAIR.

3.) THE TIME REQUIRED TO PATCH DECK HOLES SHALL NOT BE A BASIS FOR A REQUEST OF EXTENDING CONTRACT TIME.

4.) THE CONTRACTOR SHALL BE REQUIRED TO IMMEDIATELY INSTALL A DECK HOLE COVER PLATE UPON NOTIFICATION BY THE ENGINEER OF A DECK FAILURE. THE CONTRACTOR SHALL BE REQUIRED TO COMPLETE TEMPORARY COVERING OF THE HOLE WITHIN FIFTEEN (15) MINUTES.

5.) THE CONTRACTOR SHALL EFFECT A PERMANENT REPAIR OF ANY DECK HOLE DURING THE FIRST AVAILABLE "REPAIR WINDOW". THE "REPAIR WINDOW", FOR THE PURPOSE OF THIS CONTRACT, SHALL BE DEFINED AS THE TIME BETWEEN 9:00 P.M. AND 6:00 A.M. DURING THE "REPAIR WINDOW" THE CONTRACTOR SHALL DETOUR TRAFFIC ACCORDING TO THE APPROVED CONTINGENCY PLAN OR PROVIDE FLAGGING AS DIRECTED BY THE ENGINEER.

6.) THE CONTRACTOR SHALL BE REQUIRED TO SUBMIT FOR APPROVAL A CONTINGENCY PLAN THAT ADDRESSES EACH REQUIREMENT STATED HEREIN. THE PLAN SHALL INCLUDE A LIST OF ALL LABOR, EQUIPMENT, EXPENDABLE MATERIALS, SUBCONTRACTORS, ETC. NECESSARY TO MEET THESE REQUIREMENTS.

7.) ALL LABOR REQUIRED TO IMPLEMENT THE REPAIR PLAN SHALL BE PAID FOR ON A FORCE ACCOUNT BASIS FOR EACH INCIDENT THAT REQUIRES AN EMERGENCY REPAIR. ALL MATERIALS EXPENDED DURING AN EMERGENCY AND REQUIRED TO BE RESTOCKED PER THE CONTINGENCY PLAN SHALL BE PAID ON A FORCE ACCOUNT BASIS.

8.) ANY FAILURE OF THE CONTRACTOR TO COMPLY WITH THE REQUIREMENTS DESCRIBED ABOVE SHALL BE CAUSE FOR THE ENGINEER TO REQUIRE THAT ALL OTHER WORK ON THE PROJECT CEASE UNTIL THE DECK FAILURE IS REPAIRED. ANY TIME LOST DUE TO THIS REQUIREMENT SHALL NOT BE ADDED TO THE CONTRACT TIME.

THE CONTRACTOR SHALL MAINTAIN A STOCKPILE OF THE MATERIALS DESCRIBED BELOW ON THE SITE AT ALL TIMES. THIS STOCKPILE SHALL BE REQUIRED UNTIL THE NEW BRIDGE IS OPENED TO TRAFFIC.

1.) TWO (2) DECK HOLE COVER PLATES AS PER DETAIL.

2.) A SUFFICIENT QUANTITY OF DECK PATCHING MATERIAL TO COMPLETELY PATCH TWO (2) 3'x 3' FULL DEPTH HOLES AS PER DETAIL.

3.) ALL EQUIPMENT REQUIRED TO REPAIR ANY DECK HOLE THAT MAY OCCUR. THE CONTRACTOR SHALL BE REQUIRED TO RESPOND IMMEDIATELY TO ANY DECK REPAIR SITUATION AS DETERMINED BY THE ENGINEER.

4.) ANY FORMING AND/OR SHORING THAT MAY BE REQUIRED TO REPAIR ANY DECK HOLES THAT MAY OCCUR.

5.) ANY TEMPORARY LIGHTING THAT MAY BE REQUIRED TO PERMIT ANY DECK REPAIRS TO BE PERFORMED DURING THE HOURS OF 9:00 P.M. TO 6:00 A.M.

6.) ALL REQUIRED TRAFFIC CONTROL TO SETUP CASE B7 AND CASE E10 OF THE MANUAL FOR "TRAFFIC CONTROL FOR STREET AND HIGHWAY AND MAINTENANCE OPERATIONS". THE CONTRACTOR SHALL BE REQUIRED TO INSTALL AND COVER SIGNS PRIOR TO CLOSURE OF THE STRUCTURE.

7.) ANY MATERIAL EXPENDED TO COMPLETE A DECK REPAIR SHALL BE RESTOCKPILED. THE CONTRACTOR SHALL BE PAID ON A FORCE ACCOUNT BASIS FOR ALL MATERIAL REQUIRED FOR RESTOCKING PER THE APPROVED CONTINGENCY PLAN.

THE LUMP SUM BID PRICES FOR ITEM 615075-001, MISCELLANEOUS BRIDGE WORK SHALL INCLUDE ALL EXPENDABLE MATERIAL REQUIRED TO BE INITIALLY STOCKPILED AS DESCRIBED ABOVE AND ALL REUSABLE MATERIAL REQUIRED PER THE APPROVED CONTINGENCY PLAN, AND THE PREPARATION OF THE CONTINGENCY PLAN. PAYMENT OF THE LUMP SUM BID ITEM SHALL BE MADE FOLLOWING CERTIFICATION BY THE ENGINEER OF THE REQUIRED ON SITE STOCKPILE AND APPROVAL OF THE CONTINGENCY PLAN.

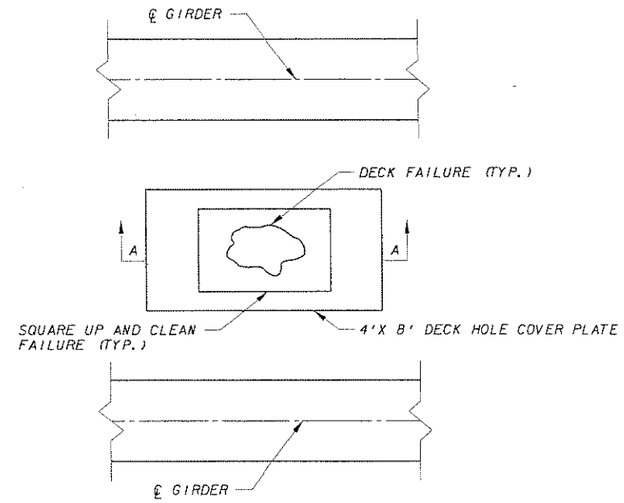

PLAN

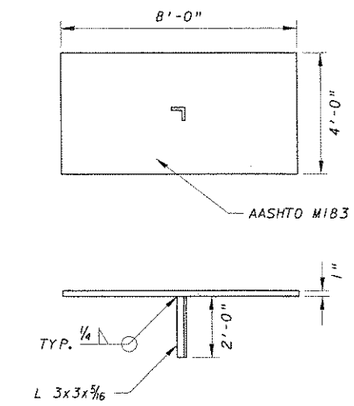

DECK HOLE COVER PLATE

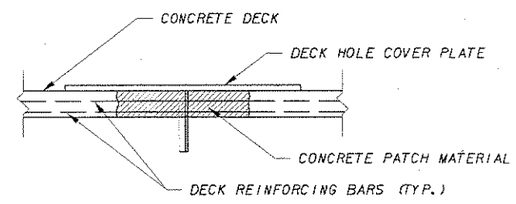

SECTION A-A

NOTE: REPAIR DECK HOLE WITH RAPID SET CEMENTIOUS CONCRETE MATERIAL PER APPROVED CONTINGENCY PLAN. MATERIAL MUST ACHIEVE 3000 PSI COMPRESSIVE STRENGTH WITHIN THE ALLOTTED "REPAIR WINDOW" TIME (9:00 P.M. - 6:00 A.M).

TYPICAL DECK FAILURE REPAIR

REVISION NUMBER	SHEET NUMBER	REVISION	DATE	BY

THE WEST VIRGINIA DEPARTMENT OF TRANSPORTATION
DIVISION OF HIGHWAYS

SPECIAL DETAILS

HDR ENGINEERING, INC.
CONSULTING ENGINEERS
WEIRTON, WV (304) 748-8740

Q.C. CHECKED WWK DATE 12/05 P.M. CHECKED SAB DATE

DATE: 12/13/2005

FILE: x:\14.SETV\dy_det_350Rc01.dgn

PUBLIC ROADS DIV.	STATE DIST. NO.	STATE PROJECT NO.	FEDERAL PROJECT NO.	FISCAL YEAR	COUNTY	SHEET NO.	TOTAL SHEETS
W.V.	6	U305-13 -0.02 00	BR-0013 (042)E	2006	BROOKE	17	163

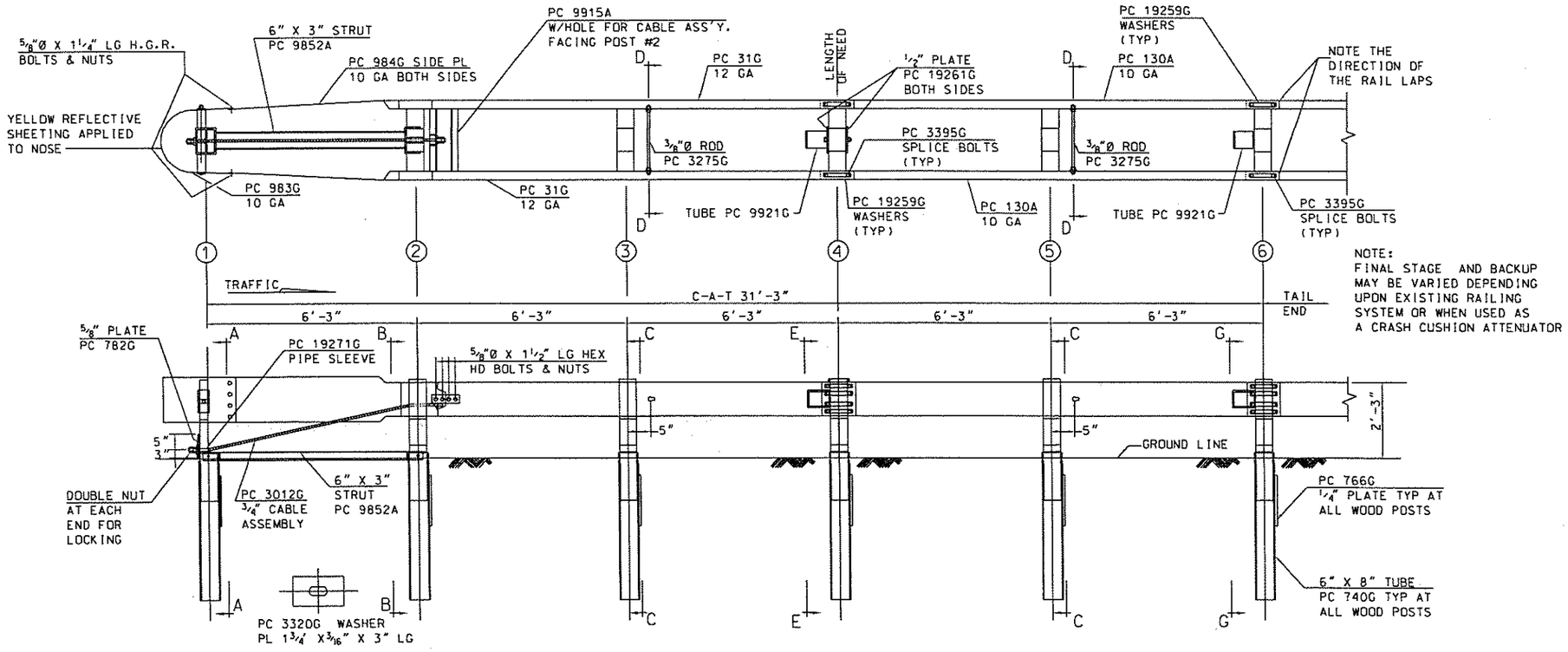

NOTE:
FINAL STAGE AND BACKUP MAY BE VARIED DEPENDING UPON EXISTING RAILING SYSTEM OR WHEN USED AS A CRASH CUSHION ATTENUATOR

C-A-T BILL OF MATERIAL

PRODUCT CODE	QTY	DESCRIPTION
31G	2	12/12'6/O CAT (GUARDRAIL)
130A	2	10/12'6/5'10:6'8/SP CAT(GUARDRAIL)
705G	1	2" x 5 1/2" PIPE
740G	6	4'6 TUBE SLEEVE
766G	6	1/4 x 18 x 24 SOIL PLATE
782G	1	5/8" x 8" x 8" BEARING PLATE
983G	1	10/NOSE PLATE/CAT/ROLLED
984G	2	10/SIDE PLATE CAT
3012G	1	CABLE 3/4 x 8'0/DBL SWG
3074B	5	WD 3'6 POST #2, 3, 4, 5, 6 CAT
3075B	1	WD 3'6 POST #1 CAT
3100B	2	WD BLOCK 1'2 #1 CAT
3101B	10	WD BLOCK 1'2 #2-6 CAT
3263G	4	3/8"Ø x 2" LAG SCREW
3275G	2	3/8"Ø x 24 1/2" RESTRAINT ROD
3300G	20	5/8" FLAT WASHER
3320G	4	3/16" x 1 3/4" x 3" RECT WASHER
3340G	85	5/8" G.R. NUT
3360G	16	5/8"Ø x 1 1/4" G.R. BOLT
3380G	8	5/8"Ø x 1 1/2" HEX BOLT
3395G	32	5/8"Ø x 1 3/4" HEX BOLT CAT
3478G	13	5/8"Ø x 7 1/2" HEX BOLT
3497G	6	5/8"Ø x 9 1/2" HEX BOLT
3650G	2	5/8"Ø x 25" G.R. BOLT
3900G	2	1" FLAT WASHER
3910G	4	1" HEX NUT
4252G	8	3/8" HEX NUT
3255G	4	3/8" FLAT WASHER
4258G	4	3/8" LOCK WASHER
4640G	8	5/8"Ø x 24" HEX BOLT
9852A	1	CHANNEL STRUT x 6'-6"
9915A	1	SPACER CHANNEL CAT
9916A	1	10/BENT PLATE SLEEVE
9921G	2	6" SLEEVE 6 x 8
19259G	32	3/16" x 2" x 10" PLATE WASHER
19261G	2	1/2 x 3 x 7 POST PLATE
19271G	1	1" x 2 1/2" PIPE SLEEVE CAT

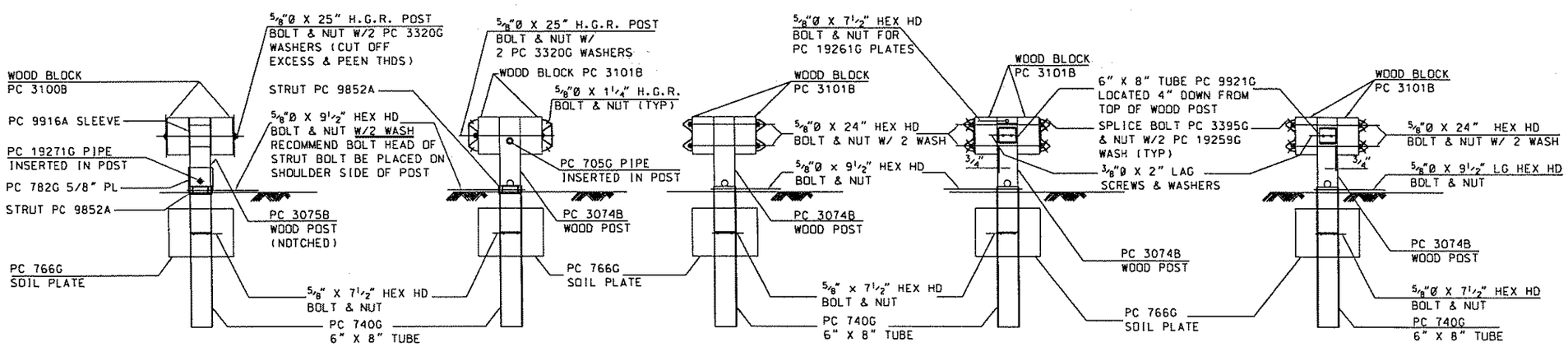

SECTION A-A ①

SECTION B-B ②

SECTION C-C ③ & ⑤

SECTION E-E ④

SECTION G-G ⑥

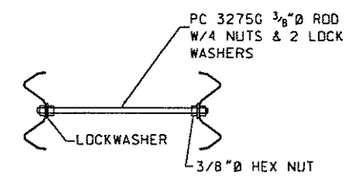

SECTION D-D

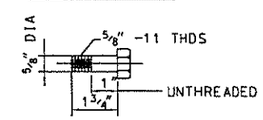

PC 3395G SPLICE BOLT

NOTE:
PC 3395G SPLICE BOLTS ARE USED TO ALLOW TELESCOPING ACTION.

NOTE: THE DOUBLE FACE END TERMINALS SHALL BE TYPE SYRO CAT-350 OR APPROVED EQUAL. THIS DRAWING IS PROVIDED FOR REFERENCE ONLY. REFER TO MANUFACTURER'S DRAWINGS FOR INSTALLATION DETAILS.

REVISION NUMBER	SHEET NUMBER	REVISION	DATE	BY

THE WEST VIRGINIA DEPARTMENT OF TRANSPORTATION
DIVISION OF HIGHWAYS

DOUBLE FACE END TREATMENT DETAIL

HDR ENGINEERING, INC.
CONSULTING ENGINEERS
WEIRTON, WV (304) 748-8740

Q.C. CHECKED WWK DATE 12/05 | P.M. CHECKED SAB DATE

DATE: 12/13/2005

FILE: w:\14.36\roy_det_350BcsD1.dgn

PUBLIC ROADS DIV.	STATE DIST. NO.	STATE PROJECT NO.	FEDERAL PROJECT NO.	FISCAL YEAR	COUNTY	SHEET NO.	TOTAL SHEETS
W.V.	6	U305-13 -0.02 00	BR-0013 (042)E	2006	BROOKE	18	163

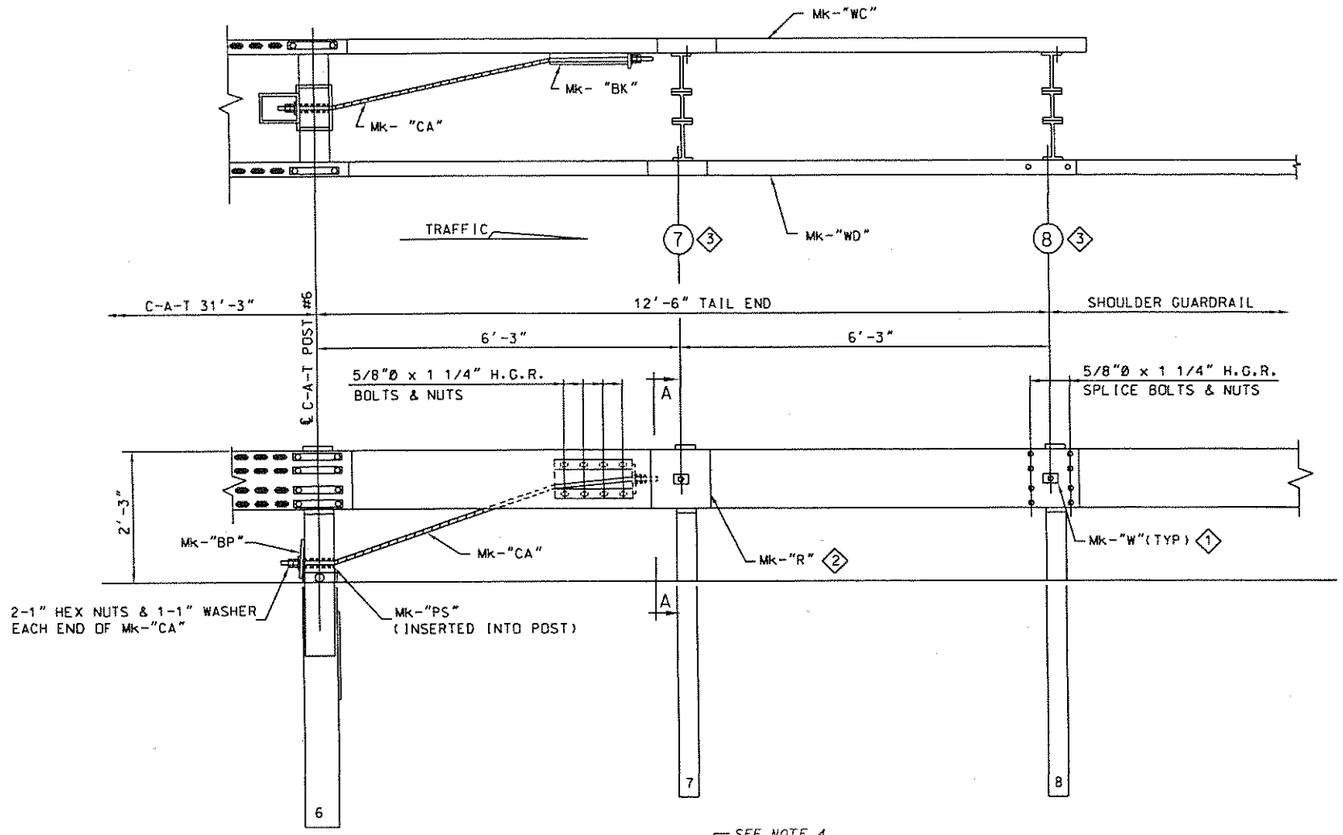

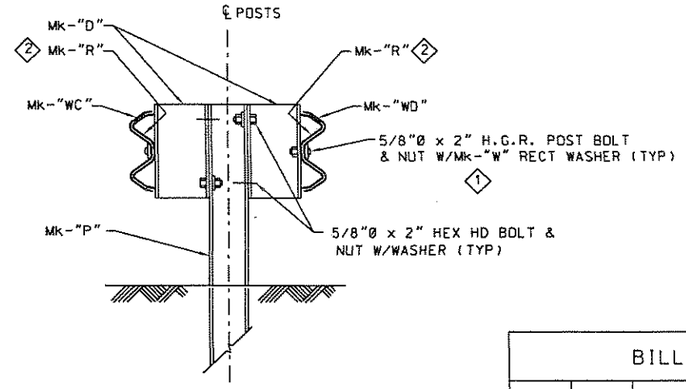

SECTION "A-A"
(SIMILAR @ POST 8)

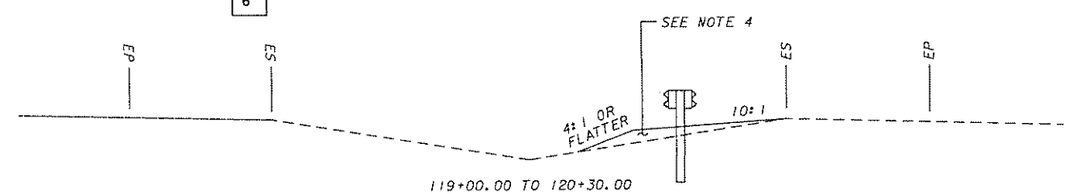

119+00.00 TO 120+30.00

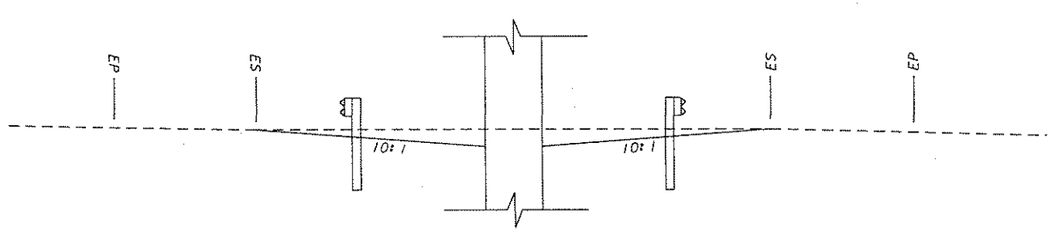

120+30.00 TO 121+70.00

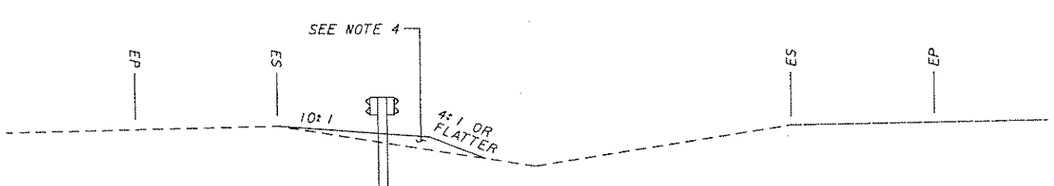

121+70.00 TO 122+62.50

GRADING PLAN
NOT TO SCALE

BILL OF MATERIAL

MK	QTY	DESCRIPTION
P	2	POST (W6 x 8.5#)
D	4	BLOCK (WB x 10#)
WC	1	DEEP BEAM GUARD RAIL (12GA)
WD	1	DEEP BEAM GUARD RAIL (12GA)
BK	1	BRACKET
BP	1	BEARING PLATE
PS	1	PIPE SLEEVE
CA	1	CABLE ASSEMBLY
R	2	DEEP BEAM BACKUP PL (12GA)
W	4	RECTANGULAR WASHER
		HARDWARE
	16	5/8"Ø x 1 1/4" H.G.R. SPLICE BOLT
	4	5/8"Ø x 2" H.G.R. POST BOLT
	8	5/8"Ø x 2" HEX HD BOLT
	20	5/8" H.G.R. NUT
	8	5/8" HEAVY HEX NUT
	8	5/8" WASHER
	4	1" HEX NUT
	2	1" WASHER

NOTES :

1.) VIEWS ON THIS DRAWING ARE FOR LEFT SHOULDER INSTALLATION. RIGHT SHOULDER INSTALLATION IS OPPOSITE HAND.

2.) DETAILS FOR THE TAIL END TREATMENT WERE DEVELOPED AND TESTED DURING THE V-A-T TESTING AT S.W.R.I..

3.) THIS DRAWING IS FOR REFERENCE ONLY. REFER TO MANUFACTURER'S DRAWINGS FOR INSTALLATION DETAILS.

4.) EXTEND GRADING 10' BEYOND CAT-350 NOSE. 20 TONS OF ITEM 307005-001 HAS BEEN ADDED FOR THIS WORK

REVISION NUMBER	SHEET NUMBER	REVISION	DATE	BY

THE WEST VIRGINIA DEPARTMENT OF TRANSPORTATION
DIVISION OF HIGHWAYS

DOUBLE FACE END TREATMENT DETAIL

HDR ENGINEERING, INC.
CONSULTING ENGINEERS
WEIRTON, WV (304) 748-8740

D.C. CHECKED WWK DATE 12/05 P.M. CHECKED SAB DATE

DATE: 12/13/2005

FILE: x:\14361\rdy_det_350Bz01.dgn

PUBLIC ROADS DIV.	STATE DIST. NO.	STATE PROJECT NO.	FEDERAL PROJECT NO.	FISCAL YEAR	COUNTY	SHEET NO.	TOTAL SHEETS
W.V.	6	U305-13 -0.02 00	BR-0013 (042)E	2006	BROOKE	19	163

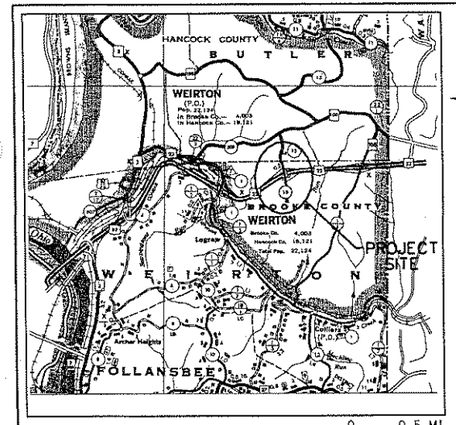

SCALE : 0 0.5 MI.

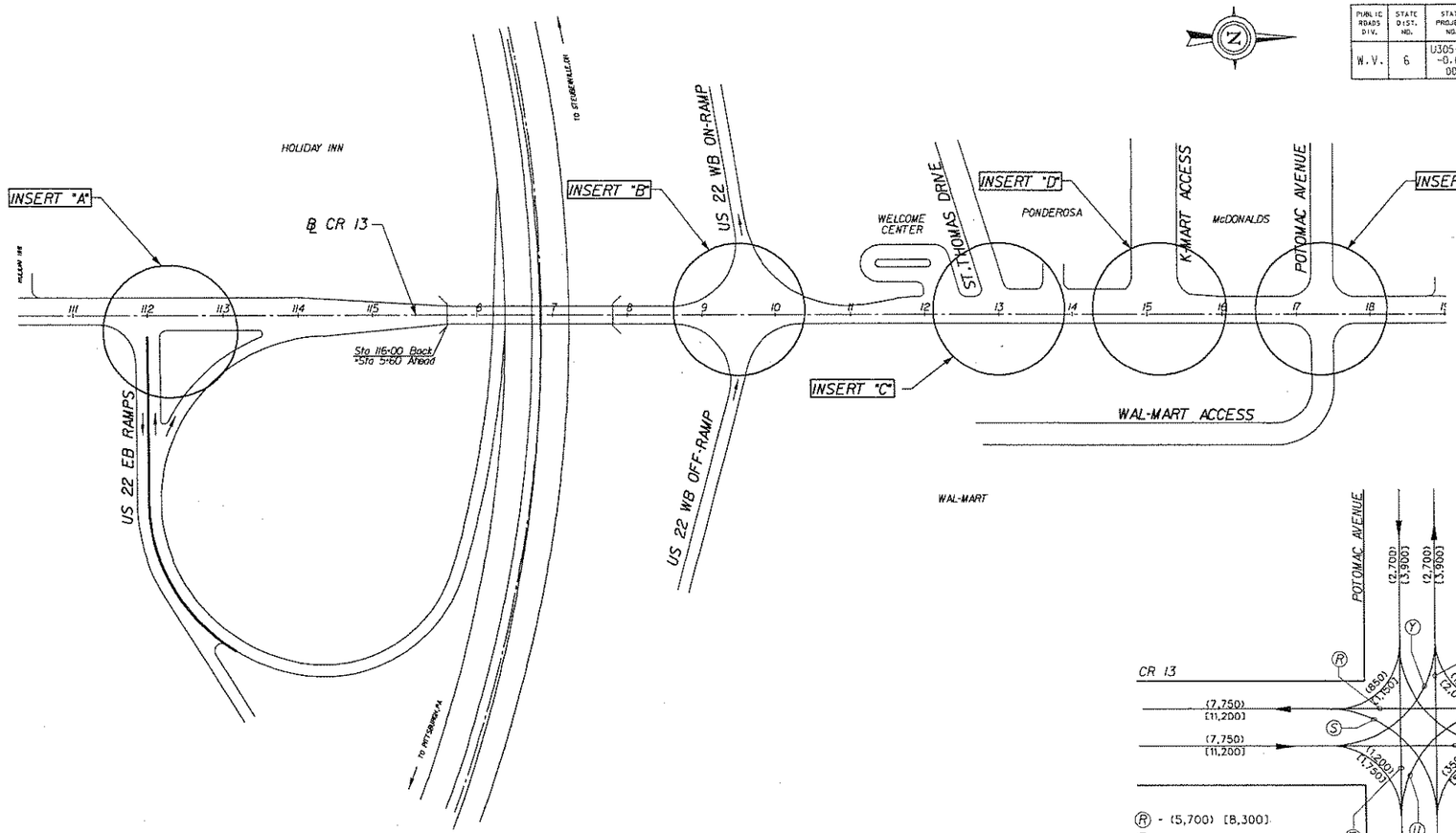

DESIGN DESIGNATION CR 13	
A.D.T. (2004)	=11,000 vpd
A.D.T. (2024)	=16,000 vpd
D.H.V.	=17%
D	=60/40
T	=1%
V	=30 MPH

LEGEND
A.D.T. 2004 (XXX)
A.D.T. 2024 [XXX]

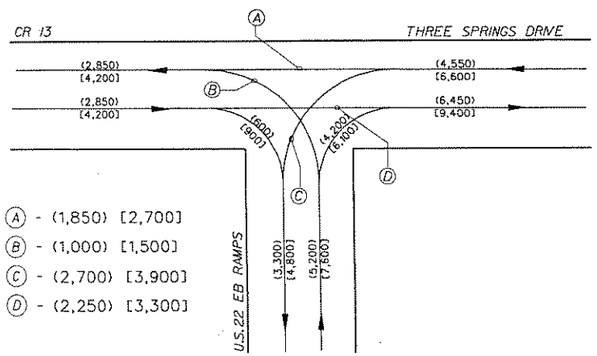

Ⓐ - (1,850) [2,700]
Ⓑ - (1,000) [1,500]
Ⓒ - (2,700) [3,900]
Ⓓ - (2,250) [3,300]

INSERT "A"
NOT TO SCALE

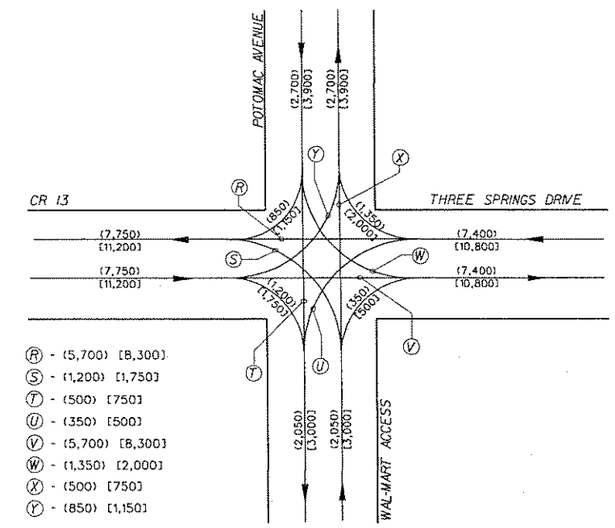

Ⓡ - (5,700) [8,300]
Ⓢ - (1,200) [1,750]
Ⓣ - (500) [750]
Ⓤ - (350) [500]
Ⓥ - (5,700) [8,300]
Ⓦ - (1,350) [2,000]
Ⓧ - (500) [750]
Ⓨ - (850) [1,150]

INSERT "E"
NOT TO SCALE

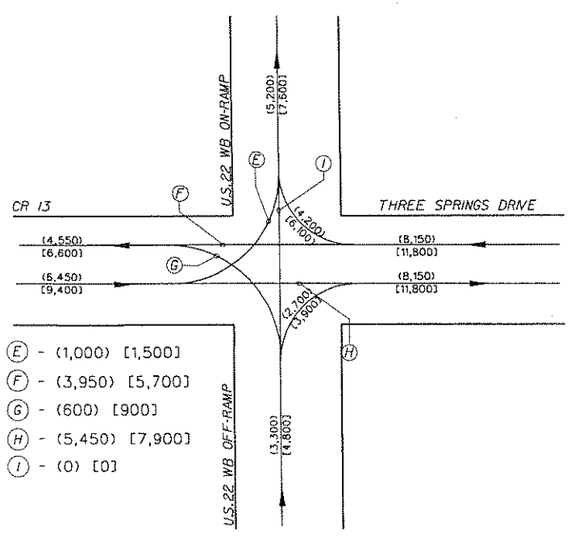

Ⓔ - (1,000) [1,500]
Ⓕ - (3,950) [5,700]
Ⓖ - (600) [900]
Ⓗ - (5,450) [7,900]
Ⓘ - (0) [0]

INSERT "B"
NOT TO SCALE

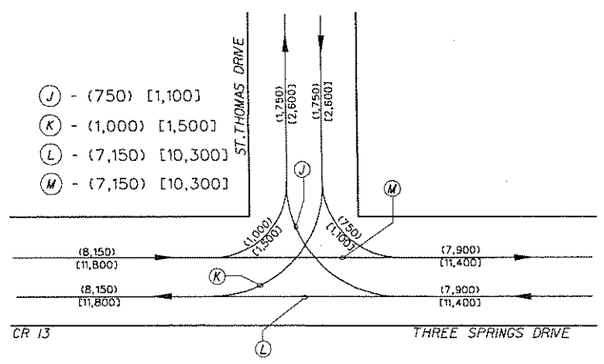

Ⓙ - (750) [1,100]
Ⓚ - (1,000) [1,500]
Ⓛ - (7,150) [10,300]
Ⓜ - (7,150) [10,300]

INSERT "C"
NOT TO SCALE

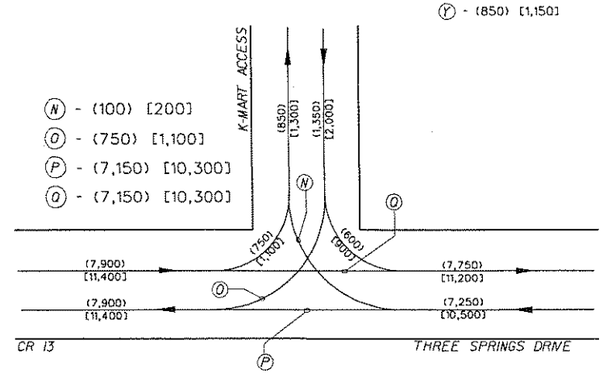

Ⓝ - (100) [200]
Ⓞ - (750) [1,100]
Ⓟ - (7,150) [10,300]
Ⓠ - (7,150) [10,300]

INSERT "D"
NOT TO SCALE

REVISION NUMBER	SHEET NUMBER	REVISION	DATE	BY

THE WEST VIRGINIA DEPARTMENT OF TRANSPORTATION
DIVISION OF HIGHWAYS

THREE SPRINGS DRIVE BRIDGE TRAFFIC SKETCH MAP

HDR ENGINEERING, INC.
CONSULTING ENGINEERS
WEIRTON, WV (304) 748-8740

Q.C. CHECKED WWK DATE 12/05 P.M. CHECKED SAB DATE 12/05

DATE 12/13/2005

FILE: X:\14361\dy_tsm_350Bcs01.dgn

PUBLIC ROADS DIV.	STATE DIST. NO.	STATE PROJECT NO.	FEDERAL PROJECT NO.	FISCAL YEAR	COUNTY	SHEET NO.	TOTAL SHEETS
W.V.	6	U305-13 -0.02 00	BR-0013 (042)E	2006	BROOKE	20	163

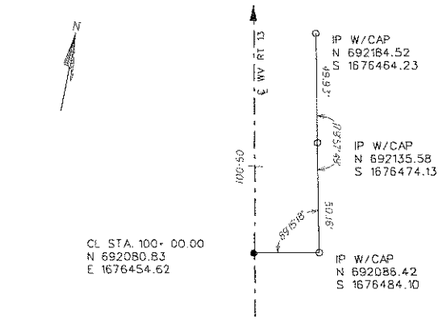

CL STATION 100+00.00
COUNTY ROUTE 13
NOT TO SCALE

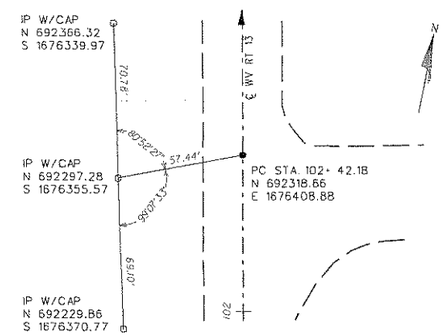

PC STATION 102+42.18
COUNTY ROUTE 13
NOT TO SCALE

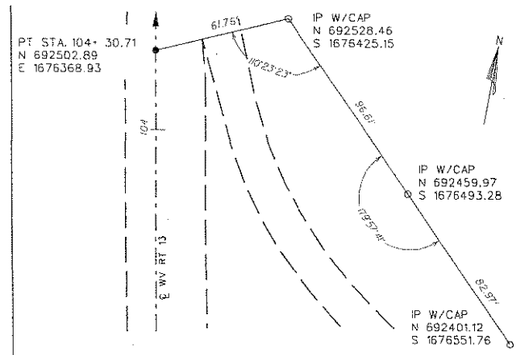

PT STATION 104+30.71
COUNTY ROUTE 13
NOT TO SCALE

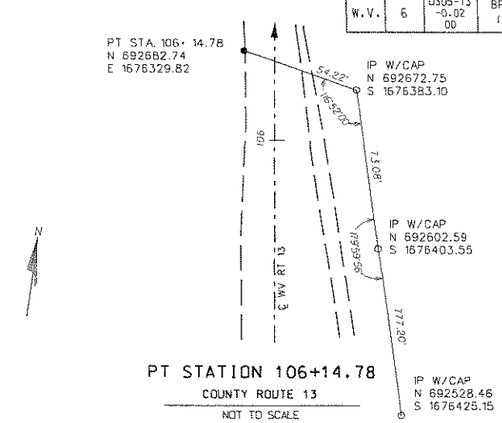

PT STATION 106+14.78
COUNTY ROUTE 13
NOT TO SCALE

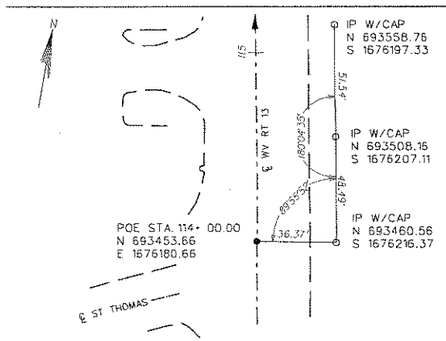

POE STATION 114+00.00
COUNTY ROUTE 13
NOT TO SCALE

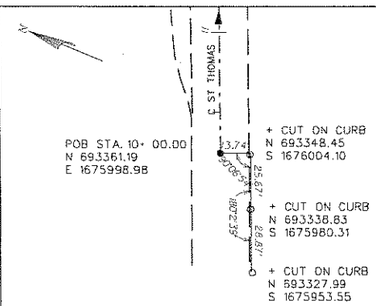

POB STATION 10+00.00
ST. THOMAS
NOT TO SCALE

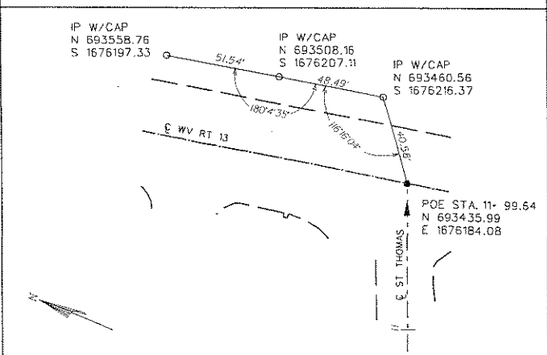

POE STATION 11+99.64
ST. THOMAS
NOT TO SCALE

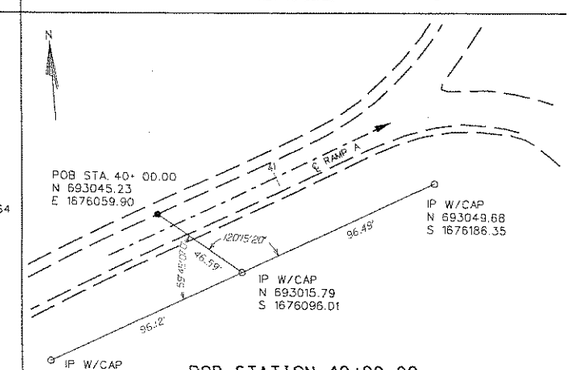

POB STATION 40+00.00
RAMP A
NOT TO SCALE

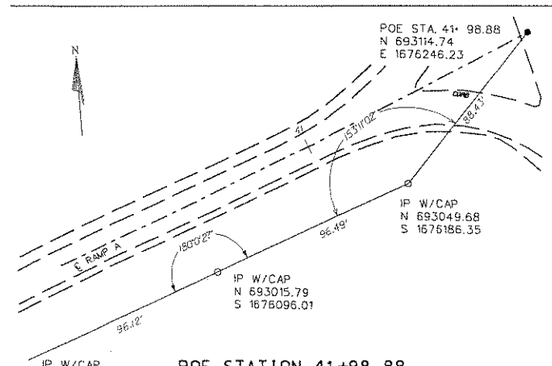

POE STATION 41+98.88
RAMP A
NOT TO SCALE

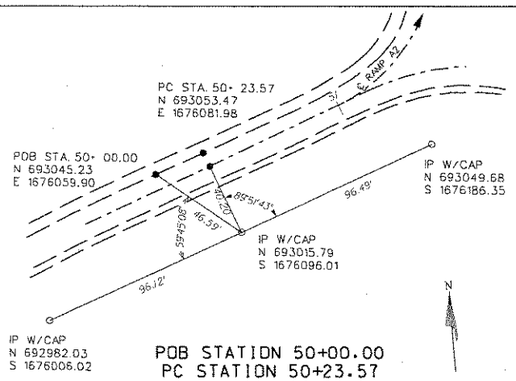

POB STATION 50+00.00
PC STATION 50+23.57
RAMP A2
NOT TO SCALE

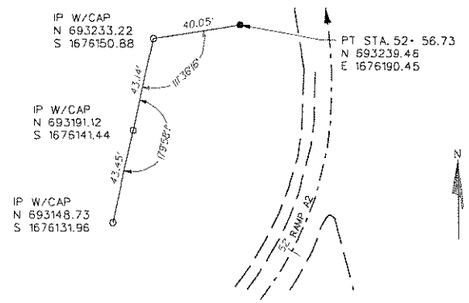

PT STATION 52+56.73
RAMP A2
NOT TO SCALE

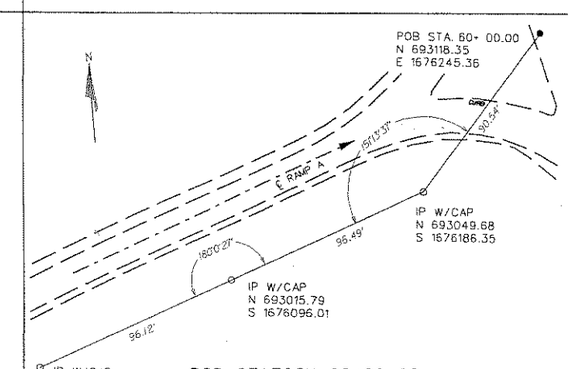

POB STATION 60+00.00
RAMP B
NOT TO SCALE

THE WEST VIRGINIA DEPARTMENT OF TRANSPORTATION
DIVISION OF HIGHWAYS

REFERENCE POINTS

REVISION NUMBER	SHEET NUMBER	REVISION	DATE	BY

HDR ENGINEERING, INC.
CONSULTING ENGINEERS
WEIRTON, WV (304) 748-8740

Q.C. CHECKED WWK DATE 12/05 | P.M. CHECKED SAB DATE 12/05

DATE: 12/13/2005

FILE: k:\14361\rdy_ref_350Bc01.dgn

PUBLIC ROADS DIV.	STATE DIST. NO.	STATE PROJECT NO.	FEDERAL PROJECT NO.	FISCAL YEAR	COUNTY	SHEET NO.	TOTAL SHEETS
W.V.	6	U305-13 -0.02 00	BR-0013 (042)E	2006	BROOKE	21	163

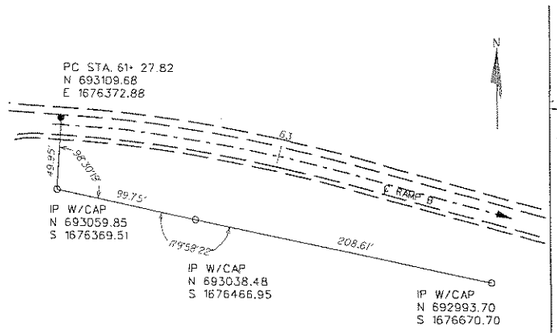

PC STATION 61+27.82
RAMP B
NOT TO SCALE

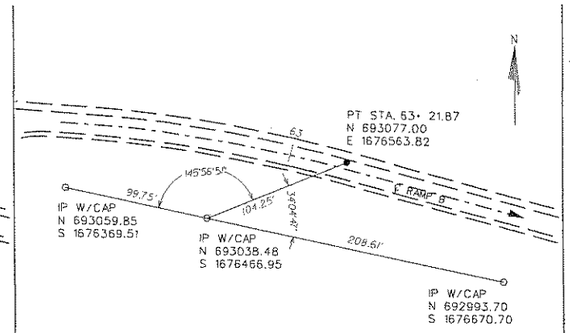

PT STATION 63+21.87
RAMP B
NOT TO SCALE

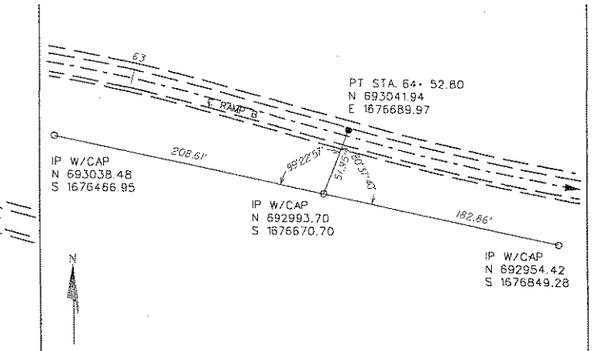

PC STATION 64+52.80
RAMP B
NOT TO SCALE

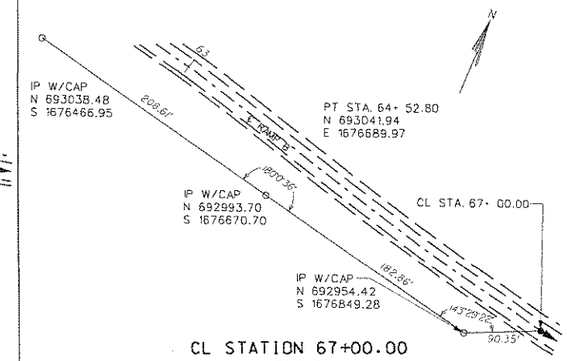

CL STATION 67+00.00
RAMP B
NOT TO SCALE

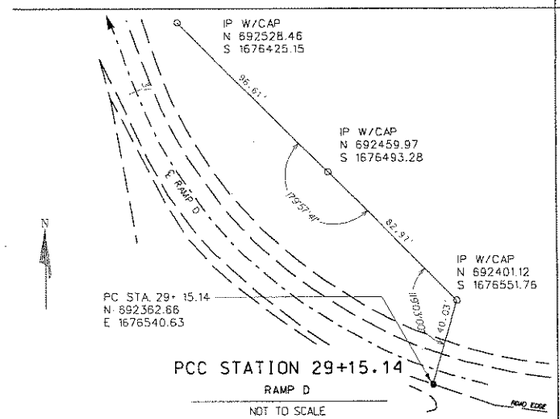

PCC STATION 29+15.14
RAMP D
NOT TO SCALE

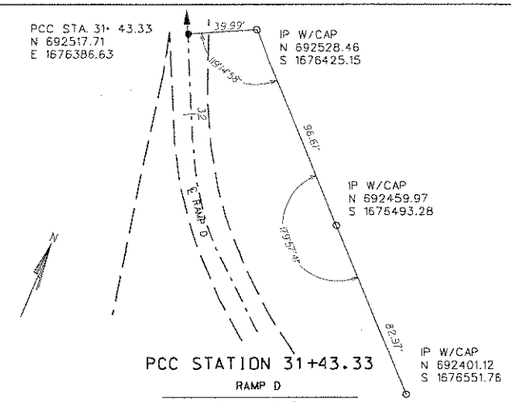

PCC STATION 31+43.33
RAMP D
NOT TO SCALE

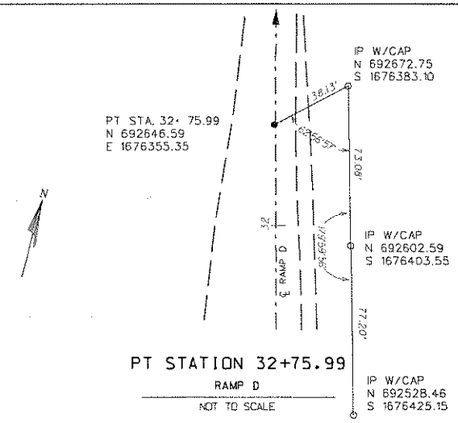

PT STATION 32+75.99
RAMP D
NOT TO SCALE

BENCHMARK TABLE

POINT ID	NORTH	EAST	ELEV.	DESCRIPTOR
BM 1	693742.06	1676109.70	1162.78	CHISELED + ON THE TOP OF CURB AT THE NORTHWEST CORNER OF A DROP INLET, 14.89 FEET LEFT OF COUNTY ROAD 13 CENTERLINE STATION 116+96.63.
BM 2	691779.57	1676481.16	1146.10	CHISELED + ON THE SOUTHEAST CORNER OF A DROP INLET 30.83 FEET LEFT OF COUNTY ROAD 13 CENTERLINE STATION 96+99.15.

THE WEST VIRGINIA DEPARTMENT OF TRANSPORTATION
DIVISION OF HIGHWAYS

REFERENCE POINTS

REVISION NUMBER	SHEET NUMBER	REVISION	DATE	BY

HDR ENGINEERING, INC.
CONSULTING ENGINEERS
WEIRTON, WV (304) 748-8740

Q.C. CHECKED WWK DATE 12/05 | P.M. CHECKED SAB DATE 12/05

DATE: 12/13/2005

FILE: w:\1436\rdy_ref_350Bcs01.dgn

PUBLIC ROADS DIV.	STATE DIST. NO.	STATE PROJECT NO.	FEDERAL PROJECT NO.	FISCAL YEAR	COUNTY	SHEET NO.	TOTAL SHEETS
W.V.	6	U305-13 -0.02 00	BR-0013 (042)E	2006	BROOKE	22	163

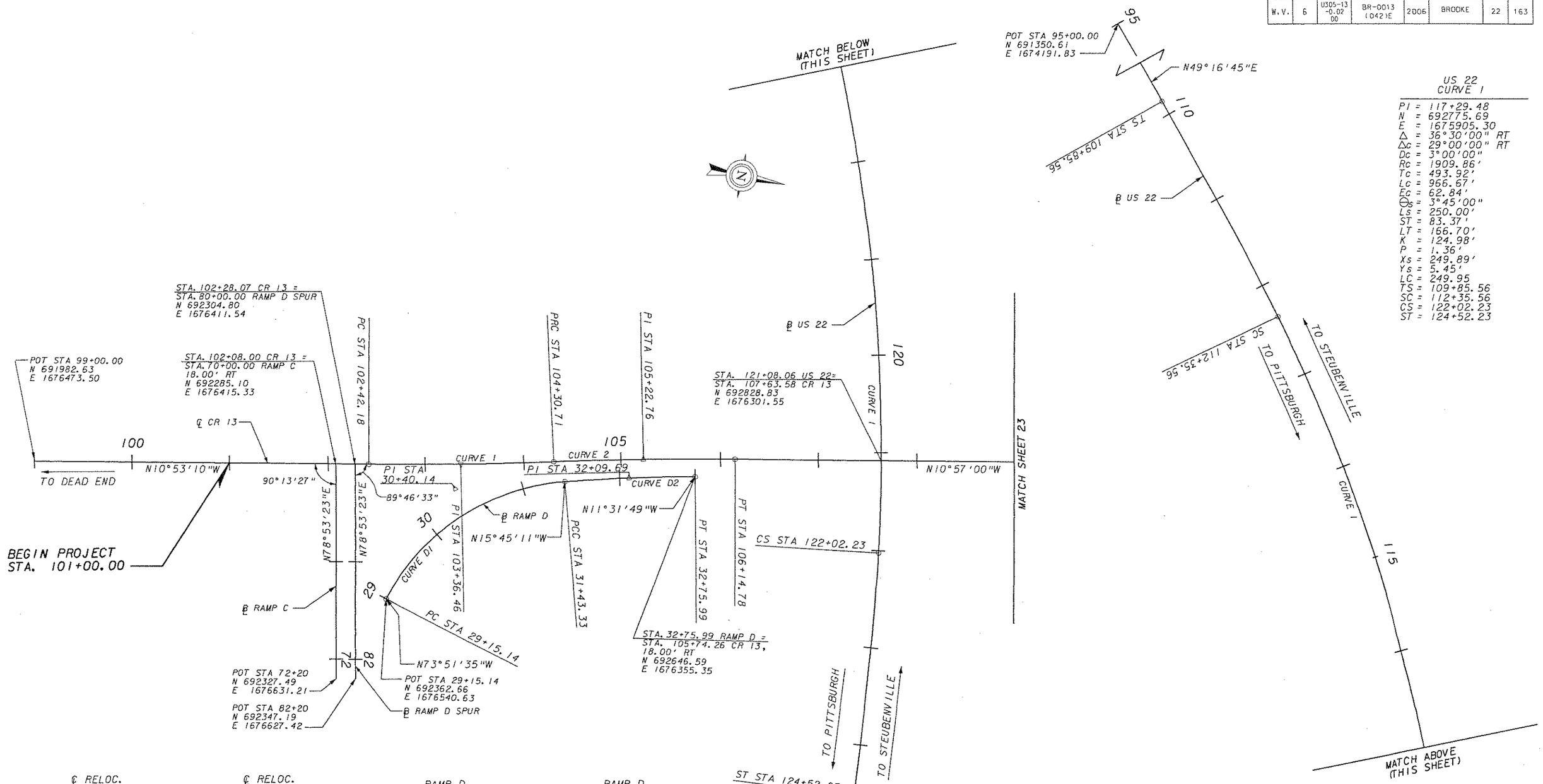

US 22
CURVE 1

PI = 117+29.48
N = 692775.69
E = 1675905.30
Δ = 36°30'00" RT
Δc = 29°00'00" RT
Dc = 3°00'00"
Rc = 1909.86'
Tc = 493.92'
Lc = 966.67'
Ec = 62.84'
Θs = 3°45'00"
Ls = 250.00'
ST = 83.37'
LT = 166.70'
K = 124.98'
P = 1.36'
Xs = 249.89'
Ys = 5.45'
LC = 249.95
TS = 109+85.56
SC = 112+35.56
CS = 122+02.23
ST = 124+52.23

℄ RELOC. CR 13 CURVE 1

PI 103+36.46
N 692411.24
E 1676391.07
Δ = 2°42'01.86" LT
Dc = 1°25'56.62"
R = 4000.00'
L = 188.53'
T = 94.28'
E = 1.11'
SE = N.C.
PC 102+42.18
PRC 104+30.71

℄ RELOC. CR 13 CURVE 2

PI 105+22.76
N 692592.36
E 1676347.30
Δ = 2°38'11.86" RT
Dc = 1°25'56.62"
R = 4000.00'
L = 184.07'
T = 92.05'
E = 1.06'
SE = N.C.
PRC 104+30.71
PT 106+14.78

RAMP D CURVE D1

PI 30+40.14
N 692397.41
E 1676420.57
Δ = 58°06'23.69" RT
Dc = 25°27'53.25"
R = 225.00'
L = 228.18'
T = 124.99
E = 28.31'
SE = 7.65%
PC 29+15.14
PCC 31+43.33

RAMP D CURVE D2

PI 32+09.69
N 692581.57
E 1676368.61
Δ = 4°13'21.56" RT
Dc = 3°10'59.16"
R = 1800.00'
L = 132.66'
T = 66.36'
E = 1.22'
SE = N.C.
PCC 31+43.33
PT 32+75.99

SCALE : 0 50 ft.

THE WEST VIRGINIA DEPARTMENT OF TRANSPORTATION
DIVISION OF HIGHWAYS

GEOMETRIC LAYOUT
THREE SPRINGS DRIVE

HDR ENGINEERING, INC.
CONSULTING ENGINEERS
WEIRTON, WV (304) 748-8740

REVISION NUMBER	SHEET NUMBER	REVISION	DATE	BY

Q.C. CHECKED WWK DATE 12/05 P.M. CHECKED SAB DATE 12/05

DATE: 12/13/2005

FILE: x:\14361\v-dy_geo_3508st.dgn

PUBLIC ROADS DIV.	STATE DIST. NO.	STATE PROJECT NO.	FEDERAL PROJECT NO.	FISCAL YEAR	COUNTY	SHEET NO.	TOTAL SHEETS
W.V.	6	U305-13 -0.02 00	BR-0013 (042)E	2006	BROOKE	23	163

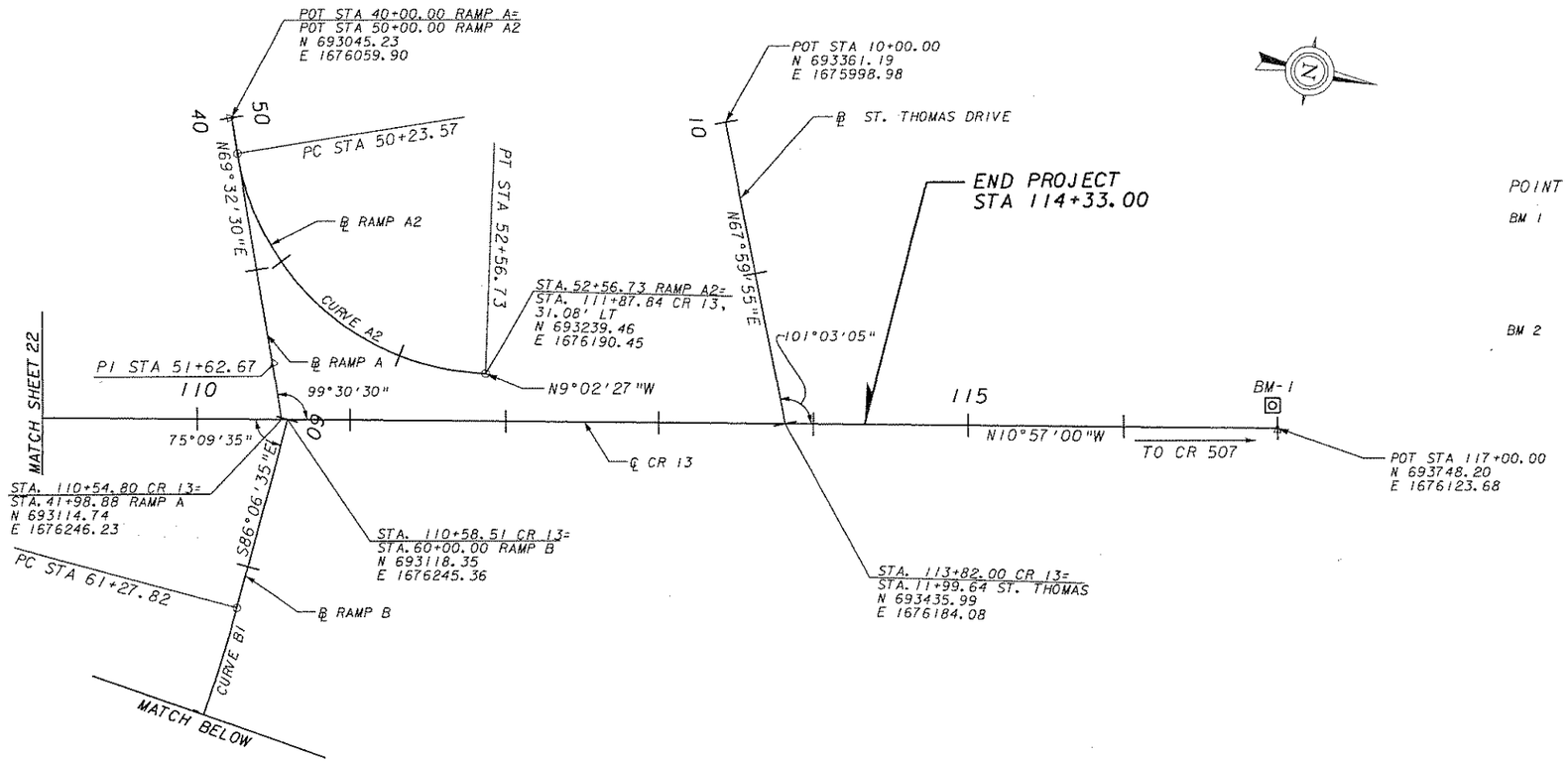

BENCHMARK TABLE

POINT ID	NORTH	EAST	ELEV.	DESCRIPTOR
BM 1	693742.06	1676109.70	1162.78	CHISELED + ON THE TOP OF CURB AT THE NORTHWEST CORNER OF A DROP INLET, 14.89 FEET LEFT OF COUNTY ROAD 13 CENTERLINE STATION 116+96.63.
BM 2	691779.57	1676481.16	1146.10	CHISELED + ON THE SOUTHEAST CORNER OF A DROP INLET 30.83 FEET LEFT OF COUNTY ROAD 13 CENTERLINE STATION 96+99.15.

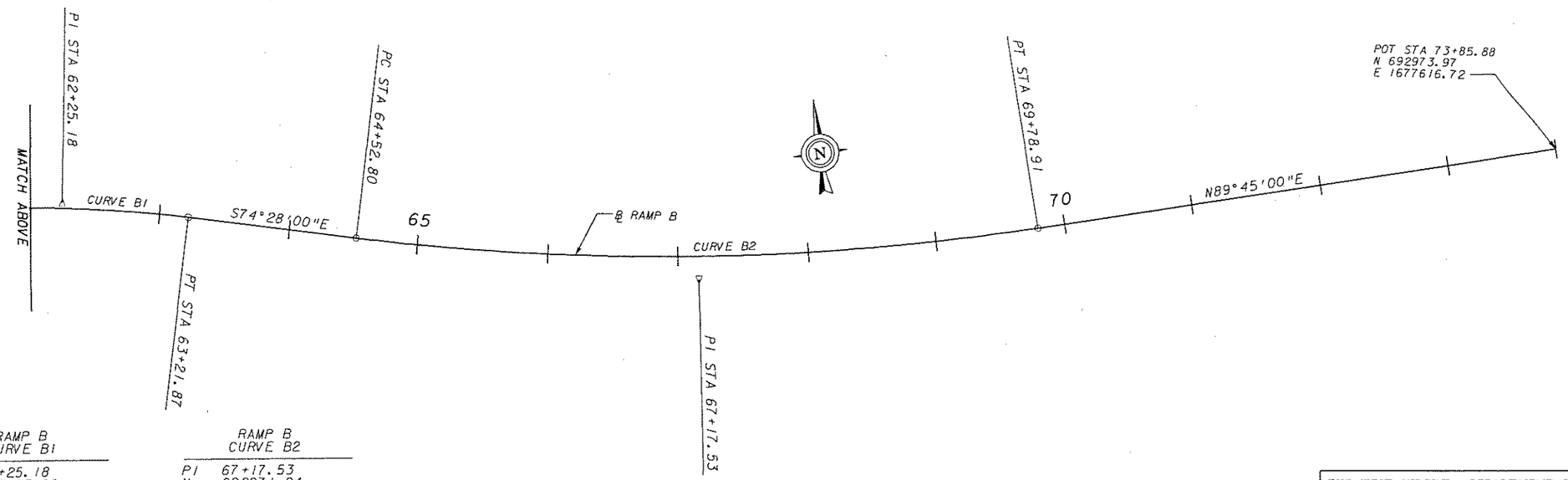

RAMP A2 CURVE A2

PI	51+62.67
N	693102.09
E	1676212.31
Δ =	78°34'57.00" LT
Dc =	33°42'12.24"
R =	170.00'
L =	233.16'
T =	139.10'
E =	49.66'
SE =	2.00%
PC	50+23.57
PT	52+56.73

RAMP B CURVE B1

PI	62+25.18
N	693103.08
E	1676470.02
Δ =	11°38'35.00" RT
Dc =	6°00'00.00"
R =	954.93'
L =	194.05'
T =	97.36'
E =	4.95'
SE =	MATCH EXISTING
PC	61+27.82
PT	63+21.87

RAMP B CURVE B2

PI	67+17.53
N	692971.04
E	1676945.03
Δ =	15°47'00.00" LT
Dc =	3°00'00.00"
R =	1909.86'
L =	526.11'
T =	264.73'
E =	18.26
SE =	MATCH EXISTING
PC	64+52.80
PT	69+78.91

SCALE : 0 50 ft.

THE WEST VIRGINIA DEPARTMENT OF TRANSPORTATION
DIVISION OF HIGHWAYS

GEOMETRIC LAYOUT
THREE SPRINGS DRIVE

HDR ENGINEERING, INC.
CONSULTING ENGINEERS
WEIRTON, WV (304) 748-8740

REVISION NUMBER	SHEET NUMBER	REVISION	DATE	BY

Q.C. CHECKED WWK DATE 12/05 P.M. CHECKED SAB DATE 12/05

DATE: 12/13/2005

FILE: w:\14561\rdy_grp_35080\dgn

GENERAL NOTES

1. MAINTENANCE OF TRAFFIC SHALL BE IN ACCORDANCE WITH SECTION 636 OF THE WEST VIRGINIA DEPARTMENT OF TRANSPORTATION, DIVISION OF HIGHWAYS SPECIFICATIONS, ROADS AND BRIDGES, ADOPTED JANUARY 1, 2000, AS AMENDED BY THE WEST VIRGINIA DEPARTMENT OF TRANSPORTATION, DIVISION OF HIGHWAYS, SUPPLEMENTAL SPECIFICATIONS, DATED JANUARY 1, 2003, AND THE MANUAL "TRAFFIC CONTROL FOR STREET AND HIGHWAY CONSTRUCTION AND MAINTENANCE OPERATIONS," DATED NOVEMBER 1994, WHICH IS MADE A PART OF THIS CONTRACT AND THE TRAFFIC PLAN FOR INDIVIDUAL SEGMENTS AS DESCRIBED BELOW.

2. LOCATIONS OF ALL TRAFFIC CONTROL DEVICES SHOWN ON THE MAINTENANCE OF TRAFFIC PLAN ARE APPROXIMATE. FINAL LOCATION OF THE TRAFFIC CONTROL DEVICES ARE TO BE ESTABLISHED IN THE FIELD BY THE ENGINEER.

3. WHEN COVERING EXISTING SIGNS, THE CONTRACTOR HAS THE OPTIONS OF USING:

   a. HEAVY DUTY BLACK OVERLAY (PLASTIC OR BURLAP TYPE)
   b. THIN WOOD OVERLAY (E.G. PLYWOOD)
   c. TAKING SIGNS DOWN AND REINSTALLING WHEN APPROPRIATE

   ANY DAMAGES CAUSED BY THE ABOVE NAMED SHALL BE REPAIRED OR REPLACED TO ORIGINAL CONDITIONS AT THE CONTRACTOR'S EXPENSE. ALL ABOVE OPERATIONS SHALL BE BID INCIDENTAL TO ITEM 636011-001

4. EXISTING SIGNS AND DELINEATORS - ANY SUCH EXISTING FACILITIES RELOCATED, REMOVED, OR DAMAGED BY THE CONTRACTOR SHALL BE REPLACED TO ITS ORIGINAL CONDITION BY THE CONTRACTOR AT HIS EXPENSE AS PART OF ITEM 636011-001. (OTHER THAN THOSE REPLACED BY THE FINAL SIGNING)

5. ANY ELECTRIC ARROWS SHALL HAVE A MINIMUM OF 1000 FT. SIGHT DISTANCE.

6. REFLECTIVE SHEETING ON TEMPORARY TRAFFIC CONTROL DEVICES SHALL BE OF NEW CONDITION AT THE BEGINNING OF THE PROJECT LIFE. THIS IS TO ENSURE THAT NIGHT VISIBILITY AND LEGIBILITY ARE MAINTAINED.

7. FLAGGER - WHEN WORK IS PERFORMED AT NIGHT WITH A FLAGGER, THE FLAGGER STATIONS SHALL BE ADEQUATELY ILLUMINATED. THIS COST SHALL BE PAID FOR UNDER ITEM 636014-001.

8. WINTER SHUTDOWN - THE CONTRACTOR SHALL PROVIDE THE DIVISION WITH A SCHEME THAT ENSURES THAT ALL LANES, SHOULDERS, SIDE ROADS, ETC. ARE FREE FLOWING AND NONRESTRICTED, EASILY TRAVERSABLE AND ALLOW SAFE TRAVEL. SUCH A SCHEME SHALL BE APPROVED IN WRITING BY THE ENGINEER.

   ANY MAINTENANCE OF TRAFFIC DEVICES UTILIZED DURING THE WINTER SHUTDOWN SHALL BE APPROVED BY THE DIVISION. THE CONTRACTOR IS RESPONSIBLE FOR "TAKE DOWN" OR "COVERING" ANY MAINTENANCE OF TRAFFIC DEVICES NOT UTILIZED.

   ALL DEVICES (SIGNS, BARRICADES, GUARDRAIL, TEMPORARY CONCRETE BARRIER, ETC.) AND PAVEMENT MARKINGS SHALL BE IN PLACE BEFORE WINTER SHUTDOWN AND MAINTAINED DURING THE WINTER SHUTDOWN BY THE CONTRACTOR.

   COSTS OF IMPLEMENTING THE WINTER SHUTDOWN SHALL BE BID INCIDENTAL TO ITEM 636011-001.

9. TEMPORARY PAVEMENT MARKING TAPE SHALL BE TYPE VIIB OR TYPE VIIC. ALL TEMPORARY TAPE SHALL BE MECHANICALLY APPLIED. SOLID LINES SHALL HAVE A 2-INCH GAP EVERY 50 FT.

10. ALL TEMPORARY CONCRETE BARRIER SHALL HAVE TYPE B-1 DELINEATORS (WHITE OR YELLOW AS APPROPRIATE) FACING TRAFFIC AT 20 FT. CENTERS. ALSO TO HAVE TYPE 'C' LIGHTS AT 100 FT. CENTERS.

11. MUST MAINTAIN TWO-WAY, TWO-LANE TRAFFIC OVERNIGHT, ON WEEKENDS, OR HOLIDAYS WITH NO MORE THAN ONE LIFT DIFFERENCE IN ELEVATION (TWO INCHES + OR -) BETWEEN ADJACENT LANES.

12. ALL TEMPORARY IMPACT ATTENUATORS SHALL BE TYPE VIII, 2 FT WIDE, 6-BAY, BI-DIRECTIONAL WITH APPROPRIATE BACKUP PER THE MANUFACTURER'S RECOMMENDATION. ANY TEMPORARY IMPACT ATTENUATOR SUFFERING DAMAGE SHALL BE REPAIRED OR REPLACED AS APPROPRIATE WITHIN 24 HOURS. SUCH OPERATIONS TO INCLUDE ALL REPAIR PARTS NECESSARY AND COSTS SHALL BE BID INCIDENTAL TO ITEM 664001-008. NOTE: ANY NEW DEVICE PURCHASED SHALL BE TYPE VIII, TYPE II, OR OTHER APPROVED DEVICE (SEE APPROVED PRODUCTS LIST).

13. ALL TEMPORARY CROSSOVERS, CONNECTIONS, AND ROADWAYS CONSTRUCTED FOR THE MAINTENANCE OF TRAFFIC OR OTHERWISE, SHALL BE REMOVED AFTER THEY ARE NO LONGER REQUIRED. THIS IS TO BE PAID FOR UNDER THE COST OF THE TEMPORARY PAVEMENT. SEE PAVING QUANTITIES FOR LOCATIONS, ITEMS, AND QUANTITIES.

14. THE CONTRACTOR SHALL INSTALL TEMPORARY PAINT FOR LANE LINES AND EDGE LINES ON COMPLETED TRAVEL LANES THAT ARE OPENED MORE THAN 24 HOURS PRIOR TO APPLYING THE FINAL PAVEMENT MARKINGS.

15. SPECIAL PROVISION FOR MOVING FLAGGER - ALL FLAGGERS SHALL BE FURNISHED BY THE CONTRACTOR AND ALL FLAGGERS SHALL BE HIS RESPONSIBILITY. WHERE MOVING FLAGGER IS NOTED OR CALLED FOR, TWO FLAGGERS SHALL BE PROVIDED AT EACH END OF THE AREAS WHERE TRAFFIC IS BEING STOPPED. ONE FLAGGER IS TO BE POSITIONED IN ACCORDANCE WITH THE MANUAL, WHILE THE OTHER FLAGGER IS TO CONTINUALLY MOVE WITH STOPPING TRAFFIC. TWO-WAY RADIOS SHALL BE PROVIDED TO THE FLAGGERS WHEN THEY ARE OUT OF SIGHT OF EACH OTHER.

16. USE "BUMP" AND "UNEVEN LANES" SIGNS AS NECESSARY. USE "LOW SHOULDER" SIGNS AT APPROXIMATELY 200' SPACING WHEN DIFFERENCE IN ELEVATION IS UP TO 2 INCHES; IF GREATER THAN 2 INCHES USE DRUMS AT 50' SPACING AND "SHOULDER DROP OFF" SIGNS AT APPROXIMATELY 200' SPACING.

17. REFER TO ITEM NUMBER 307001-000 (AGGREGATE BASE COURSE, CLASS 1) AND ITEM NUMBER 207034-000 (FABRIC FOR SEPARATION) FOR QUANTITY OF AGGREGATE USED FOR MAINTAINING TRAFFIC OVER THE FREE DRAINING BASE FOR TRAFFIC USING SIDE ROADS AND DRIVEWAYS. THESE ITEMS ARE ACCOUNTED FOR IN THE ROADWAY QUANTITIES.

18. WHEN SETTING OR REMOVING BEAMS OVER US 22, THE WORK SHALL BE PERFORMED BETWEEN THE HOURS OF 8:00 P.M. AND 6:00 A.M. ALL BEAMS OVER US 22 WHICH ARE PART OF PHASE 1 SHALL BE SET IN A MAXIMUM OF 5 NIGHTS. AFTER 6:00 A.M. THE CONTRACTOR SHALL BE ASSESSED A PENALTY OF $560 PER HOUR OR ANY FRACTION THEREOF FOR US 22 EB AND $100 PER HOUR OR ANY FRACTION THEREOF FOR US 22 WB.

    WHEN SETTING/REMOVING BEAMS OVER US 22 EB, DIVERT TRAFFIC USING DETOUR SHOWN ON MT-9 WITH TRAFFIC DIRECTORS AT THE LOCATIONS DESCRIBED.

    WHEN SETTING/REMOVING BEAMS OVER US 22 WB, DIVERT TRAFFIC AS DISCUSSED IN THE CONSTRUCTION SEQUENCING WITH TRAFFIC DIRECTORS AT THE LOCATIONS DESCRIBED.

19. WHEN RELOCATING THE EXISTING SIGN STRUCTURE ON US 22, THE WORK SHALL BE PERFORMED BETWEEN THE HOURS OF 8:00 P.M. AND 6:00 A.M. AFTER 6:00 A.M. THE CONTRACTOR SHALL BE ASSESSED A PENALTY OF $560 PER HOUR OR ANY FRACTION THEREOF.

    WHEN RELOCATING SIGN STRUCTURE ON US 22, USE CASE E6, COMPLETELY PREPARE SITE, AND THEN STOP TRAFFIC USING CMS, MOVING FLAGGERS AND TRAFFIC DIRECTOR FOR A MAXIMUM OF 15 MINUTES DURING THE OFF PEAK HOURS AS DESCRIBED ABOVE.

20. CHANGEABLE MESSAGE SIGNS
    ANY CHANGEABLE MESSAGE SIGNS USED ON THIS PROJECT SHALL CONFORM TO SUBSECTION 636.19 OF THE CURRENT SPECIFICATIONS, CURRENT SUPPLEMENTAL SPECIFICATIONS AND THE SPECIAL PROVISIONS WHICH ARE MADE A PART OF THESE PLANS. THESE SIGNS SHALL BE MANUFACTURED BY ADDCO, WINKOMATIC, OR AN APPROVED EQUAL. FOR LOCATIONS AND MESSAGES ALLOWED, CONTACT TRAFFIC ENGINEERING DIVISION IN CHARLESTON AT (304) 558-3063.

21. ACCESS TO ALL HOUSES AND BUSINESSES SHALL BE MAINTAINED AT ALL TIMES.

22. RELOCATION OF EXISTING SIGN STRUCTURE ON US 22

    PHASE 1: DISMANTLE EXISTING SIGN STRUCTURE
    - REMOVE EXISTING SIGN LIGHTING
    - REMOVE TRUSS PORTION OF STRUCTURE AND STORE ON BLOCKS SO THAT EXISTING CAMBER OF TRUSS IS MAINTAINED.
    - REMOVE UPRIGHT SUPPORTS AND STORE ON BLOCKS
    - REMOVE EXISTING FOUNDATIONS TO 12" BELOW GROUND LINE AND RESTORE GROUND TO ORIGINAL CONDITION.
    - CONTRACTOR IS TO STORE EXISTING SIGN STRUCTURE AND ALL RELATED COMPONENTS IN A SAFE LOCATION. ANY DAMAGE TO ANY COMPONENT TO INCLUDE ANY HARDWARE SHALL BE REPLACED/REPAIRED BY THE CONTRACTOR AS PART OF THE OVERHEAD SIGN BID ITEMS.
    - CONTRACTOR SHALL USE EXTREME CAUTION DUE TO THE PRESENCE OF EXISTING ELECTRICAL CONDUIT IN THE AREA.
    - IF SIGNS ARE REMOVED FROM ALUMINUM HALF-SPAN TRUSS- THEN ALSO REMOVE THE ACTUAL HALF-SPAN WITHIN ONE HOUR TO PREVENT HARMONIC VIBRATION.

    PHASE 2: RELOCATE EXISTING STRUCTURE
    - INSTALL NEW FOUNDATIONS AND GUARDRAIL (SEE SIGNING AND ROADWAY PLANS)
    - INSTALL UPRIGHT SUPPORTS AND TRUSS
    - INSTALL EXISTING SIGNS AND LIGHTING
    - REWIRE SIGN LIGHTING AS NECESSARY TO MAKE FUNCTION PROPERLY.
    - ANY DAMAGE TO ANY COMPONENT TO INCLUDE ANY HARDWARE SHALL BE REPLACED/REPAIRED BY THE CONTRACTOR AS PART OF THE OVERHEAD SIGN BID ITEMS.

CONSTRUCTION SEQUENCING

PUBLIC ROADS DIV.	STATE DIST. NO.	STATE PROJECT NO.	FEDERAL PROJECT NO.	FISCAL YEAR	COUNTY	SHEET NO.	TOTAL SHEETS
W.V.	6	U305-13 -0.02 00	BR-0013 (042)E	2006	BROOKE	24	163

PHASE 1
TRAFFIC: TRAFFIC ON EXISTING THREE SPRINGS DRIVE.

CONSTRUCTION ON US 22:
- PRIOR TO PIER CONSTRUCTION, CONTRACTOR IS TO DISMANTLE EXISTING SIGN STRUCTURE ON US 22 USING CASE E6 AS DESCRIBED IN NOTE 19. INSTALL TEMPORARY SIGNING FOR EB DIRECTION FOR INTERCHANGES 4 AND 5 (SEE GENERAL NOTES).
- CONSTRUCT PIER USING CASE E4 TO CLOSE THE INSIDE LANES FOR BOTH US 22 EB AND WB. CONCRETE BARRIER WITH TEMPORARY IMPACT ATTENUATORS TO BE USED.

CONSTRUCTION ON THREE SPRINGS DRIVE:
- CONSTRUCT NEW SB LANES OF BRIDGE.
- CONSTRUCT NEW SB LANES STA. 101+00 TO 114+33 (FULL DEPTH PAVEMENT REPLACEMENT AND WIDENING ON LEFT OF CENTERLINE).
- OVERLAY PAVEMENT STA. 101+00 TO 105+10 LEFT OF CENTERLNE

NIGHT-TIME OPERATIONS FOR PLACEMENT OF GIRDERS OVER US 22 EB:
- US 22 EB TRAFFIC DETOURED VIA EXIT 3 TO TO US22 EB AT EXIT 5, WITH TRAFFIC DIRECTORS AT THE FOLLOWING LOCATIONS (SEE MT-9):
  1) US 22 EB EXIT 3 OFF-RAMP (COVE ROAD)
  2) CR 1 (COVE ROAD) WITH US 22 EB OFF-RAMP INTERSECTION
  3) CR 1 (COVE ROAD) WITH CR 507 (COVE HILL ROAD) INTERSECTION
  4) CR 13 (THREE SPRINGS DRIVE) WITH CR 507 (COVE HILL ROAD) INTERSECTION
  5) CR 507 (COVE HILL ROAD) WITH CR 105 (PENNSYLVANIA AVENUE) INTERSECTION
  6) CR 105 (PENNSYLVANIA AVENUE) WITH CR 105 (COLLIERS WAY) INTERSECTION

NIGHT-TIME OPERATIONS FOR REMOVAL OF EXIST. GIRDERS AND PLACEMENT OF GIRDERS OVER US 22 WB:
- INTERMITTENT TRAFFIC STOPPAGES ON THREE SPRINGS DRIVE USING FLAGGERS.
- US 22 WB TRAFFIC DETOURED VIA EXIT RAMP WB TO ENTRANCE RAMP WB AT INTERCHANGE 4, WITH TRAFFIC DIRECTORS AT THE FOLLOWING LOCATIONS:
  1) US 22 WB EXIT 4 OFF-RAMP
  2) CR 13 (THREE SPRINGS DRIVE) WITH US 22 WB OFF-RAMP INTERSECTION

PHASE 2
TRAFFIC: TRAFFIC ON NEWLY CONSTRUCTED SB LANES OF THREE SPRINGS DRIVE.

CONSTRUCTION ON THREE SPRINGS DRIVE:
- PRIOR TO PIER CONSTRUCTION, CONTRACTOR IS TO REINSTALL EXISTING SIGN STRUCTURE ON US 22 USING CASE E6 (SEE GENERAL NOTES).
- CONSTRUCT PIER USING CASE E4 TO CLOSE THE INSIDE LANES FOR BOTH US 22 EB AND WB. CONCRETE BARRIER WITH A TEMPORARY IMPACT ATTENUATORS TO BE USED.
- CONSTRUCT NEW NB LANES OF BRIDGE.
- CONSTRUCT NEW NB LANES STA. 105+10 TO 111+55 (FULL DEPTH PAVEMENT REPLACEMENT AND PAVED SHOULDER ON RIGHT OF CENTERLINE).
- OVERLAY PAVEMENT STA. 101+00 TO 105+10 RIGHT OF CENTERLINE AND STA. 111+55 TO 114+33 RIGHT OF CENTERLINE.

CONSTRUCTION ON RAMP B:
- CONSTRUCT NEW LANE USING CASE F2.

NIGHT-TIME OPERATIONS FOR REMOVAL OF EXIST. GIRDERS AND PLACEMENT OF GIRDERS OVER US22 EB:
- US 22 EB TRAFFIC DETOURED VIA EXIT 3 TO TO US22 EB AT EXIT 5, WITH TRAFFIC DIRECTORS AT THE FOLLOWING LOCATIONS (SEE MT-9):
  1) US 22 EB EXIT 3 OFF-RAMP (COVE ROAD)
  2) CR 1 (COVE ROAD) WITH US 22 EB OFF-RAMP INTERSECTION
  3) CR 1 (COVE ROAD) WITH CR 507 (COVE HILL ROAD) INTERSECTION
  4) CR 13 (THREE SPRINGS DRIVE) WITH CR 507 (COVE HILL ROAD) INTERSECTION
  5) CR 507 (COVE HILL ROAD) WITH CR 105 (PENNSYLVANIA AVENUE) INTERSECTION
  6) CR 105 (PENNSYLVANIA AVENUE) WITH CR 105 (COLLIERS WAY) INTERSECTION

NIGHT-TIME OPERATIONS FOR PLACEMENT OF GIRDERS OVER US22 WB:
- INTERMITTENT TRAFFIC STOPPAGES ON THREE SPRINGS DRIVE USING FLAGGERS.
- US 22 WB TRAFFIC DETOURED VIA EXIT RAMP WB TO ENTRANCE RAMP WB AT INTERCHANGE 4, WITH TRAFFIC DIRECTORS AT THE FOLLWOING LOCATIONS:
  1) US 22 WB EXIT 4 OFF-RAMP
  2) CR 13 (THREE SPRINGS DRIVE) WITH US 22 WB OFF-RAMP INTERSECTION

PHASE 3
TRAFFIC: TRAFFIC ON NEW THREE SPRINGS DRIVE.

CONSTRUCTION ON THREE SPRINGS DRIVE:
- CONSTRUCT NEW BRIDGE SIDEWALK, BRIDGE RAILING, AND GUARDRAIL BARRIER.
- CONSTRUCT NEW TRAFFIC ISLAND ON RAMP A.

MT-1

THE WEST VIRGINIA DEPARTMENT OF TRANSPORTATION
DIVISION OF HIGHWAYS

MAINTENANCE OF TRAFFIC GENERAL NOTES

REVISION NUMBER	SHEET NUMBER	REVISION	DATE	BY

HDR ENGINEERING, INC.
CONSULTING ENGINEERS
WEIRTON, WV (304) 748-8740

Q.C. CHECKED JBI DATE 12/05 | P.M. CHECKED TPM DATE TDT2

FILE: w:\14361\rf1_tcp_350Bmt01.dgn DATE: 12/13/2005 AS-

PUBLIC ROADS DIV.	STATE DIST. NO.	STATE PROJECT NO.	FEDERAL PROJECT NO.	FISCAL YEAR	COUNTY	SHEET NO.	TOTAL SHEETS
W.V.	6	U305-13 -0.02 00	BR-0013 (042)E	2006	BROOKE	25	163

MAINTENANCE OF TRAFFIC SUMMARY

ITEM NO.	DESCRIPTION	QUANTITY UNIT	QUANTITY TOTAL
636002-001	AGGREGATE FOR MAINTAINING TRAFFIC, STONE OR GRAVEL	TN	20
636002-002	AGGREGATE FOR MAINTAINING TRAFFIC, SLAG	TN	19
636003-001	BITUMINOUS MATERIAL FOR DUST PALLIATIVE	GA	-
636005-001	TEMPORARY STRUCTURE FOR MAINTAINING TRAFFIC	LS	-
636006-001	PILOT TRUCK AND DRIVER	DA	-
636007-001	ERADICATION OF PAVEMENT MARKING	LF	2,760
636008-001	TEMPORARY PAVEMENT MARKING-PAINT 4 IN SOLID LINE	LF	4,000
636009-001	TEMPORARY PAVEMENT MARKING-TAPE 4 IN SOLID LINE	LF	7,850
636010-003	TEMPORARY RAISED PAVEMENT MARKER, TYPE TCZ	EA	-
636011-001	TRAFFIC CONTROL DEVICE	UN	18,080
636012-010	PROJECT TRAFFIC CONTROL DEVICE CLEANING	EA	3
636013-001	INDIVIDUAL TRAFFIC CONTROL DEVICE CLEANING	EA	140
636014-001	FLAGGER	HR	800
636014-002	TRAFFIC DIRECTOR	HR	800
636015-001	TEMPORARY GUARDRAIL CHANNELIZATION DEVICE	LF	-
636017-001	TEMPORARY CONCRETE BARRIER	LF	2,250
636017-002	DOH FURNISHED TEMPORARY CONCRETE BARRIER	LF	-
636018-001	REMOVE AND RESET TEMPORARY CONCRETE BARRIER	LF	625
636018-002	REMOVE AND RESET DOH FURNISHED TEMPORARY CONCRETE BARRIER	LF	-
636019-001	TEMPORARY GUARDRAIL BARRIER	LF	170
636020-001	REMOVE AND RESET TEMPORARY GUARDRAIL BARRIER	LF	-
636021-001	ELECTRIC ARROW	DA	560
636022-001	CHANGEABLE MESSAGE SIGN	DA	560
636023-001	TEMPORARY TRAFFIC SIGNAL	LS	-
636024-001	TEMPORARY PIPE FOR MAINTAINING TRAFFIC	LF	-
636025-001	WARNING LIGHTS, TYPE B	DA	4,200
636025-001	WARNING LIGHTS, TYPE C	DA	6,440
636026-001	TEMPORARY LIGHTING	LS	-
636028-001	SHADOW VEHICLE	DA	-
637001-001	WATER FOR DUST PALLIATIVE	MG	17.0
664001-008	IMPACT ATTENUATING DEVICE, TYPE IV	EA	4
664001-009	REMOVE AND RESET G.R.E.A.T. ATTENUATOR DEVICE	EA	2

TRAFFIC CONTROL DEVICE QUANTITIES

DEVICE	DESCRIPTION	VALUE IN UNITS	TOTAL QUANTITY	TOTAL UNITS
*1	SIGNS ON PORTABLE MOUNTS AND BARRICADES. (Total Sign Area 16 S.F. or Greater.)	170	0	0
*2	SIGNS ON PORTABLE MOUNTS AND BARRICADES. (Total Sign Area Less Than 16 S.F.)	80	8	640
*3	SIGNS ON PERMANENT POSTS. (Total Sign Area 16 S.F. or Greater.)	180	24	4,320
*4	SIGNS ON PERMANENT POSTS. (Total Sign Area Less Than 16 S.F.)	90	50	4,500
**5	BARRICADES - Type I	35	0	0
**6	BARRICADES - Type II	60	0	0
**7	BARRICADES - Type III	90	8	720
**8	DRUMS	60	100	6,000
9	CONES	5	20	100
10	VERTICAL PANELS OR GROUND MOUNTED DELINEATORS.	10	0	0
11	BARRIERS OR GUARDRAIL MOUNTED DELINEATORS. (TO BE BID INCIDENTAL TO THE COST OF THE BARRIER OR GUARDRAIL.)	0	135	0
12	TEMPORARY OVERLAYS AND TEMPORARY OVERSIZE SIGNS (INCL. 4 MAX FINE SIGNS)	300	6	1,800
	TOTAL			18,080

* - ORANGE SIGN SHEETING TO BE REFLECTIVE FLOURESCENT ORANGE, TYPE V

** - BARRICADES AND DRUM SHEETING TO BE 6" FLEXIBLE HIGH INTENSITY, TYPE IV

MT-2

THE WEST VIRGINIA DEPARTMENT OF TRANSPORTATION
DIVISION OF HIGHWAYS

MAINTENANCE OF TRAFFIC QUANTITIES

REVISION NUMBER	SHEET NUMBER	REVISION	DATE	BY

HDR ENGINEERING, INC.
CONSULTING ENGINEERS
WEIRTON, WV (304) 748-8740

Q.C. CHECKED JBI DATE 12/05 | P.M. CHECKED TPM DATE TDT2

DATE: 7/2/2006

FILE: x:\14351\vt_tcp_3508mt02.dgn

PUBLIC ROADS DIV.	STATE DIST. NO.	STATE PROJECT NO.	FEDERAL PROJECT NO.	FISCAL YEAR	COUNTY	SHEET NO.	TOTAL SHEETS
W.V.	6	U305-13-0.02 00	BR-0013 (042)E	2006	BROOKE	26	163

TYPICAL SECTION
BRIDGE CONSTRUCTION

PHASE 1

1. 401001-001 MARSHALL HOT-MIX ASPHALT BASE COURSE, TYPE 2, TN
2. 401001-001 MARSHALL HOT-MIX ASPHALT BASE COURSE, TYPE 1, TN
3. 307001-000 AGGREGATE BASE COURSE, CLASS 1, CY

DETAIL
TEMPORARY PAVEMENT

PHASE 1

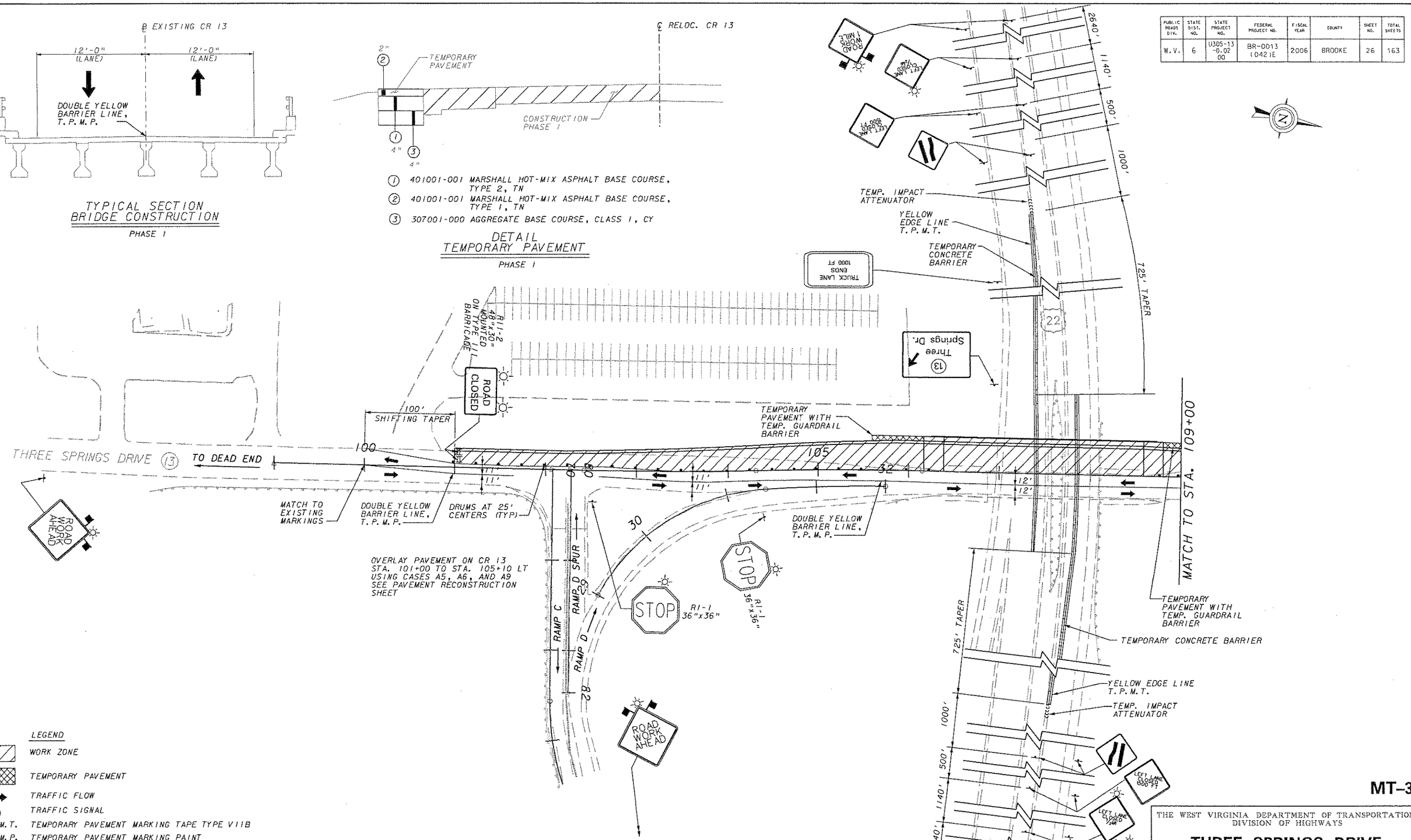

LEGEND

- WORK ZONE
- TEMPORARY PAVEMENT
- TRAFFIC FLOW
- TRAFFIC SIGNAL
- T. P. M. T. — TEMPORARY PAVEMENT MARKING TAPE TYPE VIIB
- T. P. M. P. — TEMPORARY PAVEMENT MARKING PAINT
- TEMPORARY CONCRETE BARRIER
- DRUMS
- TYPE III BARRICADE
- FLAG ORANGE, 18"x18" MIN.
- TYPE B FLASHING LIGHT
- TEMPORARY IMPACT ATTENUATOR

THREE SPRINGS BRIDGE GIRDER REMOVAL AND PLACEMENT: NIGHT-TIME OPERATIONS

SEE MT-9 FOR US 22 EB DETOUR ROUTE AND SIGNING.

US 22 WB TRAFFIC DETOURED VIA INTERCHANGE 4 WESTBOUND EXIT RAMP TO INTERCHANGE 4 WESTBOUND ENTRANCE RAMP, WITH TRAFFIC DIRECTORS AS NOTED ON MT-1.

THREE SPRINGS DRIVE- TEMPORARY INTERMITTENT TRAFFIC STOPPAGES USING FLAGGERS.

SCALE : 0 50 ft.

REVISION NUMBER	SHEET NUMBER	REVISION	DATE	BY

MT-3

THE WEST VIRGINIA DEPARTMENT OF TRANSPORTATION
DIVISION OF HIGHWAYS

THREE SPRINGS DRIVE MAINTENANCE OF TRAFFIC PHASE 1

HDR ENGINEERING, INC.
CONSULTING ENGINEERS
WEIRTON, WV (304) 748-8740

O.C. CHECKED JBI DATE 12/05 P.M. CHECKED TPM DATE TDT2

DATE 12/13/2005

FILE x:\14351\1/_tcp_3508m03.dgn

PUBLIC ROADS DIV.	STATE DIST. NO.	STATE PROJECT NO.	FEDERAL PROJECT NO.	FISCAL YEAR	COUNTY	SHEET NO.	TOTAL SHEETS
W.V.	6	U305-13 -0.02 00	BR-0013 (042)E	2006	BROOKE	27	163

LEGEND

- WORK ZONE
- TEMPORARY PAVEMENT
- ONE-LANE AT A TIME, ONE LIFT AT A TIME CONSTRUCTION WITH FLAGGERS
- TRAFFIC FLOW
- TRAFFIC SIGNAL
- T. P. M. T. TEMPORARY PAVEMENT MARKING TAPE TYPE VIIB
- T. P. M. P. TEMPORARY PAVEMENT MARKING PAINT
- TEMPORARY CONCRETE BARRIER
- DRUMS
- TYPE III BARRICADE
- FLAG ORANGE, 18"x18" MIN.
- TYPE B FLASHING LIGHT
- TEMPORARY IMPACT ATTENUATOR

NOTES:

1. CONTRACTOR IS TO RELOCATE EXISTING SIGNAL POLE P3 AS SHOWN ON THE SIGNAL PLANS. CONTRACTOR IS TO USE FLAGGING DURING SIGNAL DOWNTIME.
2. AT THE END OF PHASE 1, INSTALL NEW LOOPS ON ST. THOMAS DRIVE AS SHOWN ON THE SIGNAL PLANS.
3. CONTRACTOR IS TO ADJUST THE EXISTING SIGNAL HEADS TO BE IN THE LOCATIONS SHOWN ON THE SIGNAL PLANS.

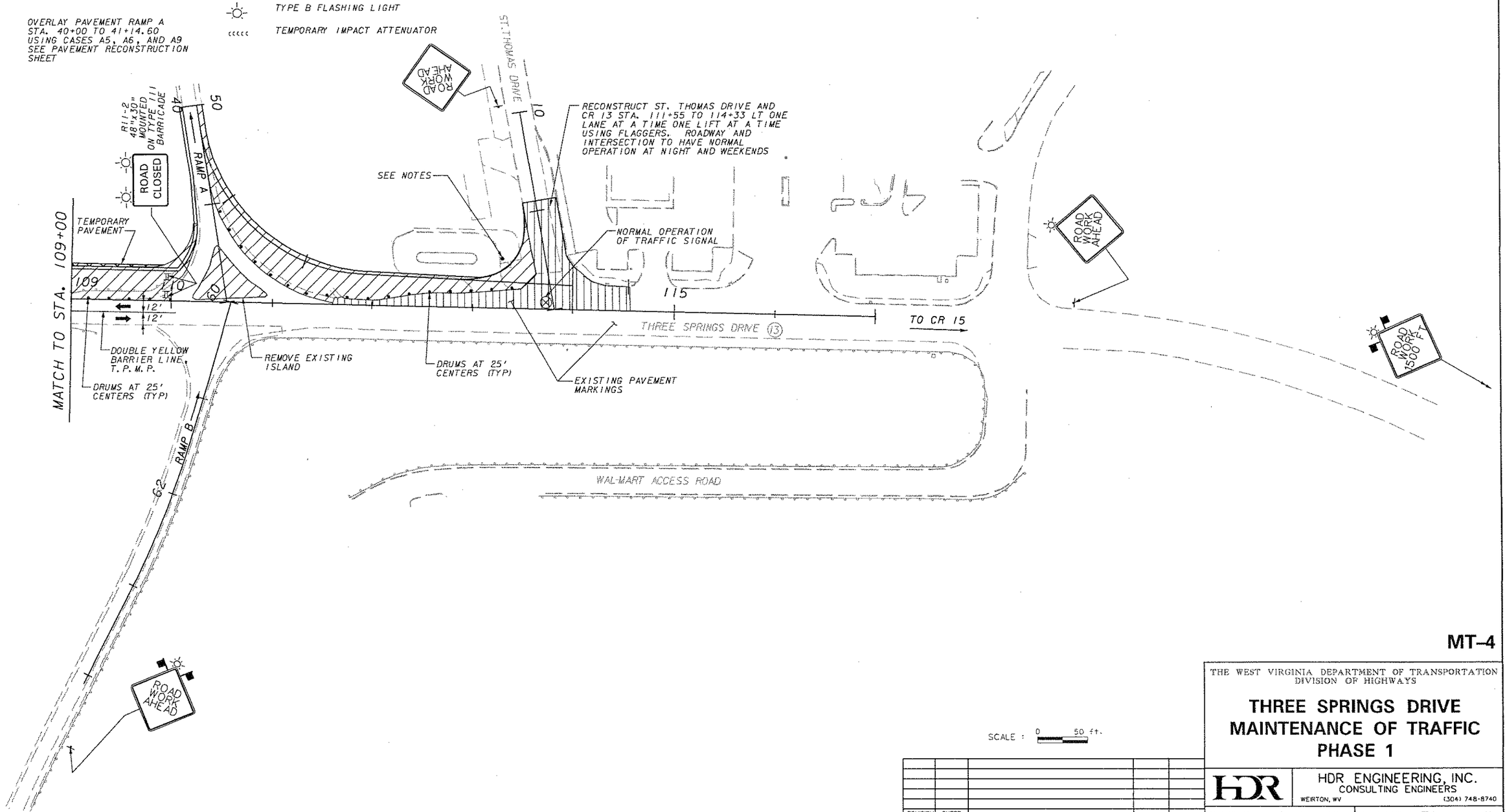

MT-4

SCALE : 0 50 ft.

REVISION NUMBER	SHEET NUMBER	REVISION	DATE	BY

THE WEST VIRGINIA DEPARTMENT OF TRANSPORTATION
DIVISION OF HIGHWAYS

THREE SPRINGS DRIVE MAINTENANCE OF TRAFFIC PHASE 1

HDR ENGINEERING, INC.
CONSULTING ENGINEERS
WEIRTON, WV (304) 748-8740

Q.C. CHECKED JBI DATE 12/05 P.M. CHECKED TPM DATE TDT2

DATE: 12/13/2005

FILE: w:\1436\trf_tcp_35098-114.dgn

PUBLIC ROADS DIV.	STATE DIST. NO.	STATE PROJECT NO.	FEDERAL PROJECT NO.	FISCAL YEAR	COUNTY	SHEET NO.	TOTAL SHEETS
W.V.	6	U305-13-0.02 00	BR-0013 (042)E	2006	BROOKE	28	163

TYPICAL SECTION
BRIDGE CONSTRUCTION

PHASE 2

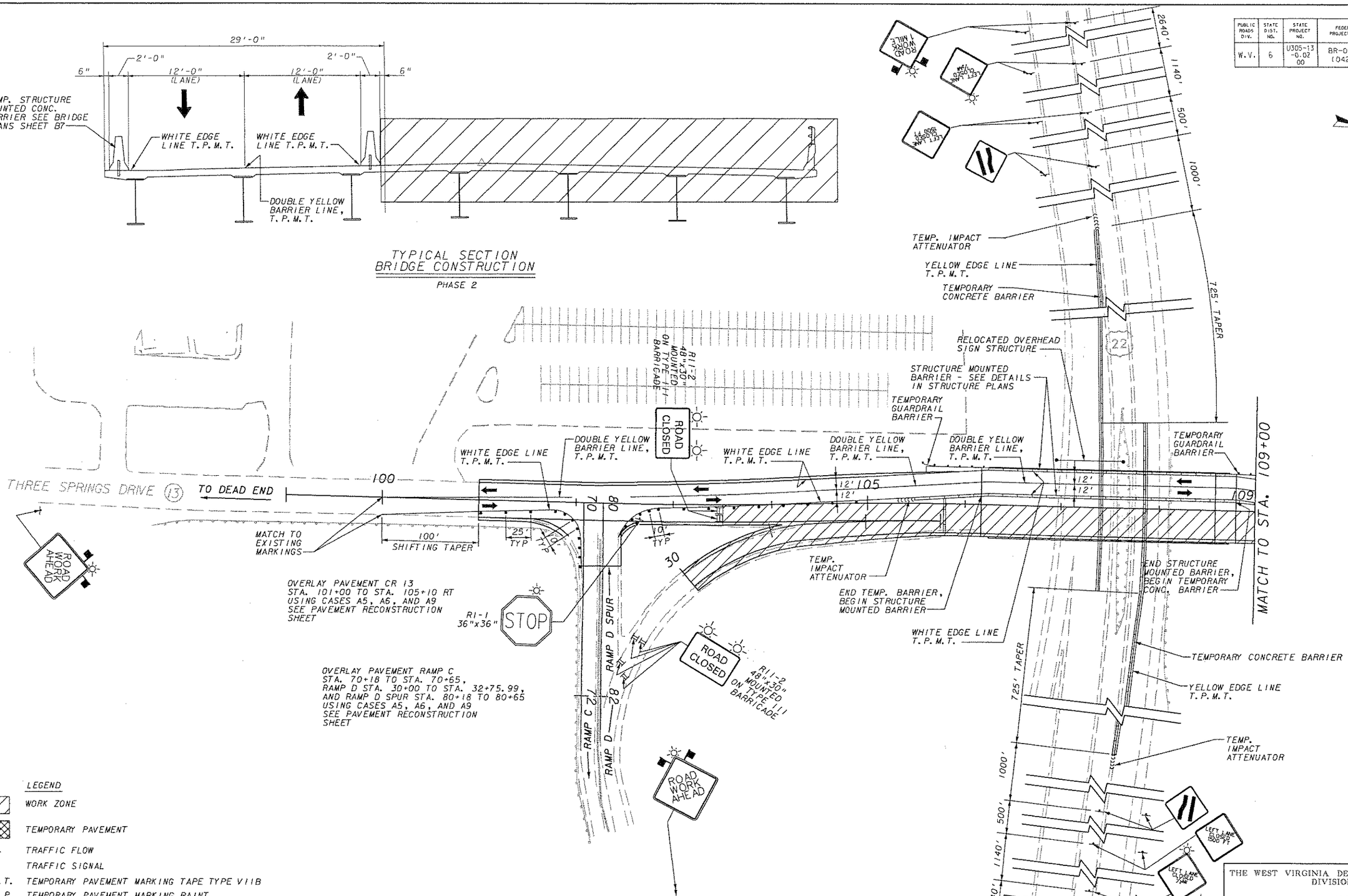

LEGEND

- WORK ZONE
- TEMPORARY PAVEMENT
- TRAFFIC FLOW
- TRAFFIC SIGNAL
- T.P.M.T. TEMPORARY PAVEMENT MARKING TAPE TYPE VIIB
- T.P.M.P. TEMPORARY PAVEMENT MARKING PAINT
- TEMPORARY CONCRETE BARRIER
- DRUMS
- TYPE III BARRICADE
- FLAG ORANGE, 18"x18" MIN.
- TYPE B FLASHING LIGHT
- TEMPORARY IMPACT ATTENUATOR

THREE SPRINGS BRIDGE GIRDER REMOVAL AND PLACEMENT: NIGHT-TIME OPERATIONS

SEE MT-9 FOR US 22 EB DETOUR ROUTE AND SIGNING.

US 22 WB TRAFFIC DETOURED VIA INTERCHANGE 4 WESTBOUND EXIT RAMP TO INTERCHANGE 4 WESTBOUND ENTRANCE RAMP, WITH TRAFFIC DIRECTORS AS NOTED ON MT-1.

THREE SPRINGS DRIVE- TEMPORARY INTERMITTENT TRAFFIC STOPPAGES USING FLAGGERS.

SCALE : 0 50 ft.

REVISION NUMBER	SHEET NUMBER	REVISION	DATE	BY

MT-5

THE WEST VIRGINIA DEPARTMENT OF TRANSPORTATION
DIVISION OF HIGHWAYS

THREE SPRINGS DRIVE MAINTENANCE OF TRAFFIC PHASE 2

HDR ENGINEERING, INC.
CONSULTING ENGINEERS
WEIRTON, WV (304) 748-8740

Q.C. CHECKED JBI DATE 12/05 P.M. CHECKED TPM DATE TDT2

DATE: 12/13/2005

FILE: K:\14361\rf_tcp_3508mt05.dgn

PUBLIC ROADS DIV.	STATE DIST. NO.	STATE PROJECT NO.	FEDERAL PROJECT NO.	FISCAL YEAR	COUNTY	SHEET NO.	TOTAL SHEETS
W.V.	6	U305-13 -0.02 00	BR-0013 (042)E	2006	BROOKE	29	163

LEGEND

- WORK ZONE
- TEMPORARY PAVEMENT
- TRAFFIC FLOW
- TRAFFIC SIGNAL
- T.P.M.T. TEMPORARY PAVEMENT MARKING TAPE TYPE VIIB
- T.P.M.P. TEMPORARY PAVEMENT MARKING PAINT
- TEMPORARY CONCRETE BARRIER
- DRUMS
- TYPE III BARRICADE
- FLAG ORANGE, 18"x18" MIN.
- TYPE B FLASHING LIGHT
- TEMPORARY IMPACT ATTENUATOR

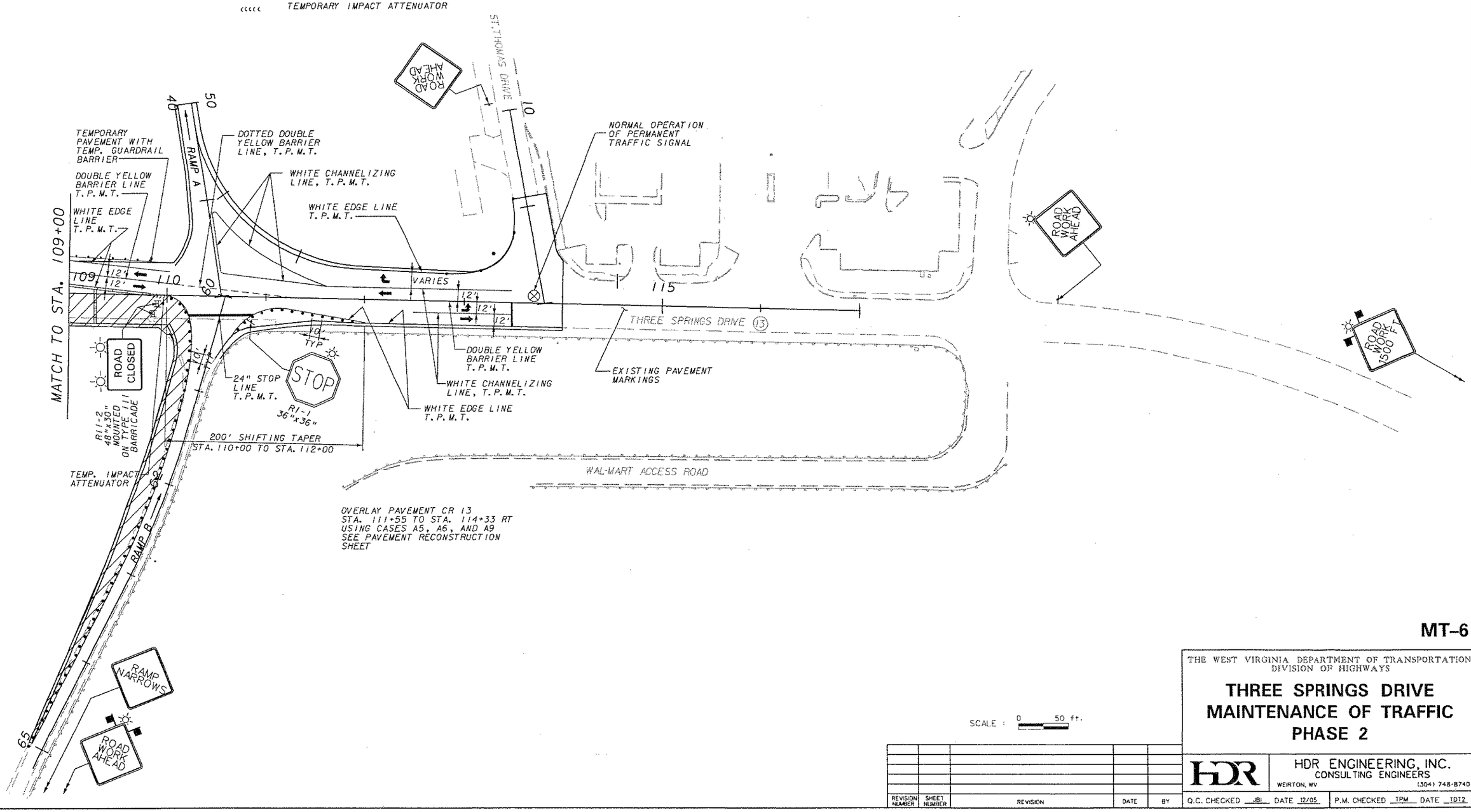

MT-6

THE WEST VIRGINIA DEPARTMENT OF TRANSPORTATION
DIVISION OF HIGHWAYS

THREE SPRINGS DRIVE MAINTENANCE OF TRAFFIC PHASE 2

HDR ENGINEERING, INC.
CONSULTING ENGINEERS
WEIRTON, WV (304) 748-8740

REVISION NUMBER	SHEET NUMBER	REVISION	DATE	BY

Q.C. CHECKED JBI DATE 12/05 P.M. CHECKED TPM DATE TDT2

DATE 12/13/2005

FILE x:\1438\tf_tcp_350bm05.dgn