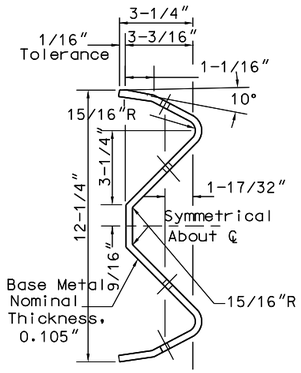


SECTION
RAIL ELEMENT

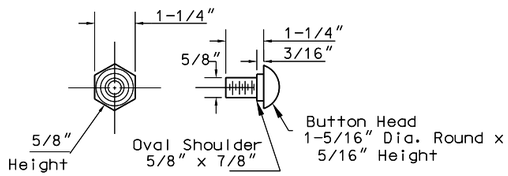


NUT SPLICE BOLT

SLICE BOLT: Similar Except Length

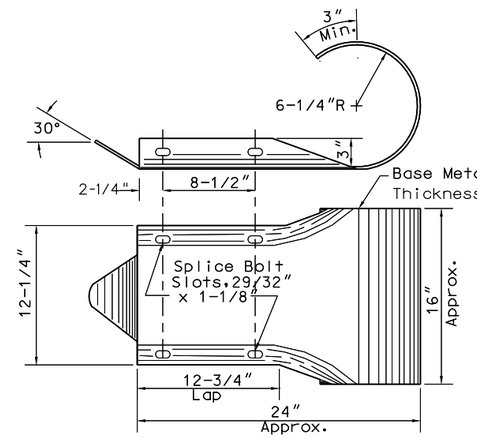


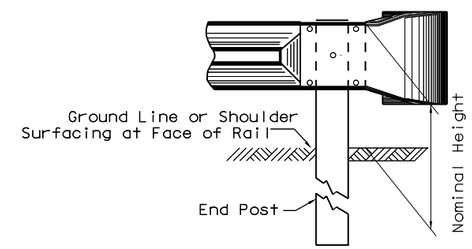


TERMINAL SECTION BUFFER END

(For Use Only on Unanchored Ends And on Special Trailing End Terminal)

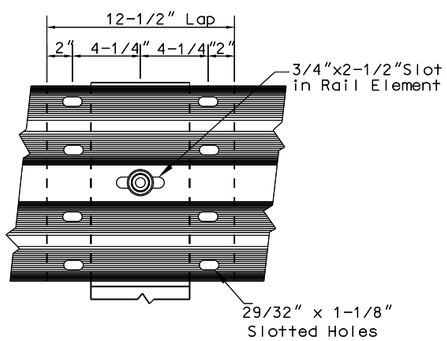


RAIL SPLICE - 28 1/2" HEIGHT ON POST

Eight (8) Splice Bolts are to be used at all Rail Splices

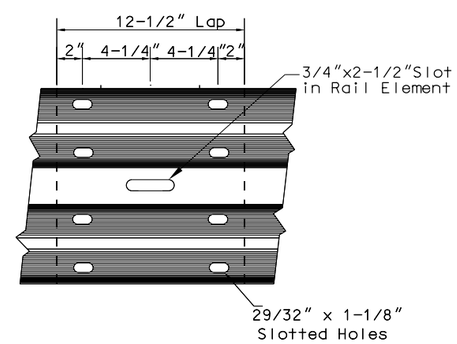


RAIL SPLICE - 31" HEIGHT OFF POST

Eight (8) Splice Bolts are to be used at all Rail Splices

WEST VIRGINIA DEPARTMENT OF TRANSPORTATION
DIVISION OF HIGHWAYS

REVISED STANDARD DETAIL

GUARDRAIL ELEMENT
BUFFER END

PREPARED 11-13-12

| REVISION DATE |
| --- |
| |

SHEET GR1-A