WEST VIRGINIA
Division of Culture and History

The Culture Center
1900 Kanawha Blvd., E.
Charleston, WV 25305-0300
Randall Reid-Smith, Commissioner
Phone 304.558.0220 • www.wvculture.org
Fax 304.558.2779 • TDD 304.558.3562
EEO/AA Employer

August 18, 2014

Mr. Ben L. Hark
Environmental Section Head
West Virginia Department of Highways
1900 Kanawha Boulevard East
Building Five Room 110
Charleston, West Virginia 25305

RE: Thurmond Bridge Project
State Project S310-25/2-0.10 Federal Project BR-0252(001)D
FR: 14-776-FA-1

Dear Mr. Hark:

We have reviewed the above mentioned project to determine its effects to cultural resources. As required by Section 106 of the National Historic Preservation Act of 1966, as amended, and its implementing regulations, 36 CFR 800: "Protection of Historic Properties," we submit our comments.

According to submitted information, the West Virginia Department of Highways evaluated the Thurmond Bridge as individually eligible for the National Register and is proposing modifications to the bridge.

Your requested our concurrence regarding these items:

The proposed direct Area of Potential Effect (APE) to bridge:
We concur on the proposed direct area as depicted in the map and all structures and buildings within the viewshed of the bridge.

The proposed plan for involving the public/concerned parties:
We recommend that you also invite the Fayette County Historic Landmark Commission, 218 Woods Avenue, Oak Hill, West Virginia 254901, as a consulting party.

The Identification of Historic Properties:
We concur that the Thurmond Bridge is listed on the National Register of Historic Places as part of two nominations, and appreciate the Historic Property form to document the bridge. Although already listed, we concur that the bridge is individually eligible according to Criterion C.

We appreciate the opportunity to be of service. If you have questions regarding our comments or the Section 106 process, please contact Ernest Blevins, Structural Historian, at (304) 558-0240.

Sincerely,

Susan M. Pierce

Susan M. Pierce
Deputy State Historic Preservation Officer

SMP/EEB

WEST VIRGINIA
Division of Culture and History

The Culture Center
1900 Kanawha Blvd., E.
Charleston, WV 25305-0300
Randall Reid-Smith, Commissioner
Phone 304.558.0220 • www.wvculture.org
Fax 304.558.2779 • TDD 304.558.3562
EEO/AA Employer

December 31, 2014

Mr. Ben Hark
Environmental Section Head
WV Division of Highways
1900 Kanawha Blvd. East
Building Five Room 110
Charleston, WV 25305-0430

RE: Thurmond Bridge Project
State Project S310-25/2-0.10; Federal Project BR-0252(001)D
FR#: 14-776-FA-2

Dear Mr. Hark:

We have reviewed the above mentioned project to determine its effects to cultural resources. As required by Section 106 of the National Historic Preservation Act of 1966, as amended, and it's implementing regulations, 36 CFR 800: "Protection of Historic Properties," we submit our comments.

The information submitted includes plans for the rehabilitation of the Thurmond Bridge. The scope of work includes stabilization, strengthening, and repair of the bridge. The preferred alternative also incorporates the addition of refuge bays on the upstream (east) side of the bridge to address pedestrian safety concerns identified by the National Park Service.

After review of the information submitted, it is our opinion that the preferred alternative will result in an adverse effect to the Thurmond Bridge. The bridge is eligible as part of the Thurmond Historic District as well as the Dunlop Branch Railroad. On its own, the bridge is significant under Criterion C due to its unusual combination of a railroad and vehicular bridge. The removal of sections of the bridge to create the refuge bays will be taking away portions of the historic bridge. Additionally, there will be a visual change to the bridge from the river. We also have concerns regarding how the material used on the refuge bays will weather over time in comparison to the original bridge materials.

The report submitted to our office indicates that the National Park Service, as well as the Town of Thurmond has been included in the discussion of the rehabilitation of the bridge. Please continue to include these parties in the ongoing conversation, as well as keep the Fayette County Historic Landmark Commission and Preservation Alliance of West Virginia apprised of the project.

While we have concerns regarding the new refuge bays, we do appreciate the Division of Highways work to rehabilitate the bridge and make it safe for all forms of traffic. However, the addition of the bays is a visual change, therefore, an adverse effect. Please contact my staff to discuss appropriate mitigation prior to drafting a Memorandum of Agreement.

We appreciate the opportunity to be of assistance. If you have any questions regarding our comments or the Section 106 process, please contact Jennifer Brennan, Structural Historian, at 304-558-0240.

Sincerely,

Susan M. Pierce
Deputy State Historic Preservation Officer

SMP/JLB

WEST VIRGINIA
Division of Culture and History

The Culture Center
1900 Kanawha Blvd., E.
Charleston, WV 25305-0300
Randall Reid-Smith, Commissioner
Phone 304.558.0220 • www.wvculture.org
Fax 304.558.2779 • TDD 304.558.3562
EEO/AA Employer

January 14, 2015

Mr. Ben Hark
Environmental Section Head
WV Division of Highways
1900 Kanawha Blvd. East
Building Five Room 110
Charleston, WV 25305-0430

RE: Thurmond Bridge Project
State Project S310-25/2-0.10; Federal Project BR-0252(001)D
FR#: 14-776-FA-3

Dear Mr. Hark:

We have reviewed the above mentioned project to determine its effects to cultural resources. As required by Section 106 of the National Historic Preservation Act of 1966, as amended, and it's implementing regulations, 36 CFR 800: "Protection of Historic Properties," we submit our comments.

The information submitted includes plans for the rehabilitation of the Thurmond Bridge. The scope of work includes stabilization, strengthening, and repair of the bridge. The preferred alternative also incorporates the addition of refuge bays on the upstream (east) side of the bridge to address pedestrian safety concerns identified by the National Park Service.

This letter will serve as clarification to our previous correspondence December 31, 2014. After review of the proposed work, it is our opinion that the project will be an adverse effect to the Thurmond Historic District as well as the Dunloup Branch Railroad. Please contact my staff to discuss appropriate mitigation prior to drafting a Memorandum of Agreement.

We appreciate the opportunity to be of assistance. If you have any questions regarding our comments or the Section 106 process, please contact Jennifer Brennan, Structural Historian, at 304-558-0240.

Sincerely,

Susan M. Pierce
Deputy State Historic Preservation Officer

SMP/JLB

WEST VIRGINIA
Division of Culture and History

The Culture Center
1900 Kanawha Blvd., E.
Charleston, WV 25305-0300
Randall Reid-Smith, Commissioner
Phone 304.558.0220 • www.wvculture.org
Fax 304.558.2779 • TDD 304.558.3562
EEO/AA Employer

September 15, 2015

Mr. Ben L. Hark
Environmental Section Head, Engineering Division
West Virginia Division of Highways
1334 Smith Street
Charleston, West Virginia 25301

RE: Thurmond Bridge Project
State Project: S310-25/2-0.10 / Federal Project: BR-0252(001)D
FR# 14-776-FA-4

Dear Mr. Hark:

We have reviewed the above mentioned project to determine its effects to cultural resources. As required by Section 106 of the National Historic Preservation Act of 1966, as amended, and its implementing regulations, 36 CFR 800: "Protection of Historic Properties," we submit our comments.

According to submitted information, the West Virginia Division of Highways (DOH) proposes to rehabilitate the Thurmond Bridge which spans the New River in Fayette County, WV. The scope of work includes stabilization, strengthening, and repair of the bridge. The preferred alternative incorporates the addition of refuge bays on the upstream (east) side of the bridge. The refuge bays address pedestrian safety concerns identified by the National Park Service.

We have reviewed the submitted Memorandum of Agreement (MOA). Stipulation II states: "The rehabilitation of the bridge is part of the mitigation to save this historic structure. Refuge bays are being added for safety for the public. Plans will be submitted to the State Historic Preservation Office for a 30 day review and comment period."

In our December 31, 2014 and January 14, 2015 letters to your office, we requested that you contact our office to discuss appropriate mitigation measures in light of the adverse effect to the National Register of Historic Places (NRHP) eligible Thurmond Bridge, the NRHP-eligible Dunloup Branch Railroad, and the NRHP-listed Thurmond Historic District. Rather than continue discussion regarding mitigation, my office received an MOA for signature. We believe it is premature to proceed to an MOA and are unable to sign the MOA at this time.

The proposed mitigation is basically flawed. The inclusion of a stipulation that identifies the cause of the adverse effect is not actually mitigation. Discussion about the refuge bays among the various consulting parties - the National Park Service, the Preservation Alliance of West Virginia, the Fayette County Historic Landmark Commission, the Town of Thurmond, and our office - should continue prior to preparation of an MOA. If this consultation measure is included in the MOA, then the MOA must address how this consultation will actually impact the design. There is no indication that DOH will actually consider or implement suggestions provided by any of the consulting parties. How far along is DOH in the design and engineering of the refuge bays? Upon receipt of the proposed refuge bay design, we will comment further.

We are also concerned that DOH continues to rely on the stipulation that it will create a website for historic bridges. This stipulation has been included in multiple bridge replacement Memoranda. To date, there has been no evident action taken to complete this stipulation for any bridge. Please provide our office with a list of all of the bridges scheduled for inclusion on this website and provide a status of the creation of this electronic resource. If DOH cannot demonstrate that this website is under development, then please suggest alternate mitigation.

We appreciate the opportunity to be of service. *If you have questions regarding our comments or the Section 106 process, please contact Jeffrey S. Smith, Structural Historian, at (304) 558-0240.*

Sincerely,

Susan M. Pierce
Deputy State Historic Preservation Officer

SMP/JSS

WEST VIRGINIA DEPARTMENT OF TRANSPORTATION
Division of Highways
1900 Kanawha Boulevard East • Building Five • Room 110
Charleston, West Virginia 25305-0430 • (304) 558-3505

Earl Ray Tomblin
Governor

Paul A. Mattox, Jr., P. E.
Secretary of Transportation/
Commissioner of Highways

October 23, 2015

Ms. Susan Pierce
Deputy State Historic Preservation Officer
West Virginia Division of Culture and History
1900 Kanawha Boulevard, E.
Charleston, West Virginia 25305

Dear Ms. Pierce:

State Project S310-25/2-0.10
Federal Project BR-0252(001)D
Thurmond Bridge Rehabilitation Project
FR#14-776-FA
Fayette County

In response to your September 15, 2015 letter and October 21, 2015 conference call is information regarding the railing on the refuge bays for the Thurmond Bridge Rehabilitation Project. Attached is the plan sheet detailing the railing along with the railing company brochure. In the brochure there are red boxes around the details proposed for the railing. The WVDOH is proposing to do 4" x 4" square tube posts with 2" x 2" square wall posts and 3" rounded top rail.

Should you have any questions, please contact Sondra Mullins, of our Environmental Section at (304) 558-9487.

Very truly yours,

Ben L. Hark

Ben L. Hark
Environmental Section Head
Engineering Division

H:h
Attachments

Bcc: DDE (SM)

WEST VIRGINIA
Division of Culture and History

The Culture Center
1900 Kanawha Blvd., E.
Charleston, WV 25305-0300
Randall Reid-Smith, Commissioner
Phone 304.558.0220 • www.wvculture.org
Fax 304.558.2779 • TDD 304.558.3562
EEO/AA Employer

September 15, 2015

RECEIVED
SEP 18 2015
ENGINEERING DIVISION

Mr. Ben L. Hark
Environmental Section Head, Engineering Division
West Virginia Division of Highways
1334 Smith Street
Charleston, West Virginia 25301

RE: Thurmond Bridge Project
State Project: S310-25/2-0.10 / Federal Project: BR-0252(001)D
FR# 14-776-FA-4

Dear Mr. Hark:

We have reviewed the above mentioned project to determine its effects to cultural resources. As required by Section 106 of the National Historic Preservation Act of 1966, as amended, and its implementing regulations, 36 CFR 800: "Protection of Historic Properties," we submit our comments.

According to submitted information, the West Virginia Division of Highways (DOH) proposes to rehabilitate the Thurmond Bridge which spans the New River in Fayette County, WV. The scope of work includes stabilization, strengthening, and repair of the bridge. The preferred alternative incorporates the addition of refuge bays on the upstream (east) side of the bridge. The refuge bays address pedestrian safety concerns identified by the National Park Service.

We have reviewed the submitted Memorandum of Agreement (MOA). Stipulation II states: "The rehabilitation of the bridge is part of the mitigation to save this historic structure. Refuge bays are being added for safety for the public. Plans will be submitted to the State Historic Preservation Office for a 30 day review and comment period."

In our December 31, 2014 and January 14, 2015 letters to your office, we requested that you contact our office to discuss appropriate mitigation measures in light of the adverse effect to the National Register of Historic Places (NRHP) eligible Thurmond Bridge, the NRHP-eligible Dunloup Branch Railroad, and the NRHP-listed Thurmond Historic District. Rather than continue discussion regarding mitigation, my office received an MOA for signature. We believe it is premature to proceed to an MOA and are unable to sign the MOA at this time.

The proposed mitigation is basically flawed. The inclusion of a stipulation that identifies the cause of the adverse effect is not actually mitigation. Discussion about the refuge bays among the various consulting parties - the National Park Service, the Preservation Alliance of West Virginia, the Fayette County Historic Landmark Commission, the Town of Thurmond, and our office - should continue prior to preparation of an MOA. If this consultation measure is included in the MOA, then the MOA must address how this consultation will actually impact the design. There is no indication that DOH will actually consider or implement suggestions provided by any of the consulting parties. How far along is DOH in the design and engineering of the refuge bays? Upon receipt of the proposed refuge bay design, we will comment further.

We are also concerned that DOH continues to rely on the stipulation that it will create a website for historic bridges. This stipulation has been included in multiple bridge replacement Memoranda. To date, there has been no evident action taken to complete this stipulation for any bridge. Please provide our office with a list of all of the bridges scheduled for inclusion on this website and provide a status of the creation of this electronic resource. If DOH cannot demonstrate that this website is under development, then please suggest alternate mitigation.

We appreciate the opportunity to be of service. *If you have questions regarding our comments or the Section 106 process, please contact Jeffrey S. Smith, Structural Historian, at (304) 558-0240.*

Sincerely,

Susan M. Pierce

Susan M. Pierce
Deputy State Historic Preservation Officer

SMP/JSS

Public Roads Div.	State Dist. No.	State Project No.	Federal Project No.	Fiscal Year	County	Sheet No.	Total Sheets
W. V.	9	S310-25/2-0.10 00	BR-0252 (003)D	2015	FAYETTE	C38	C47

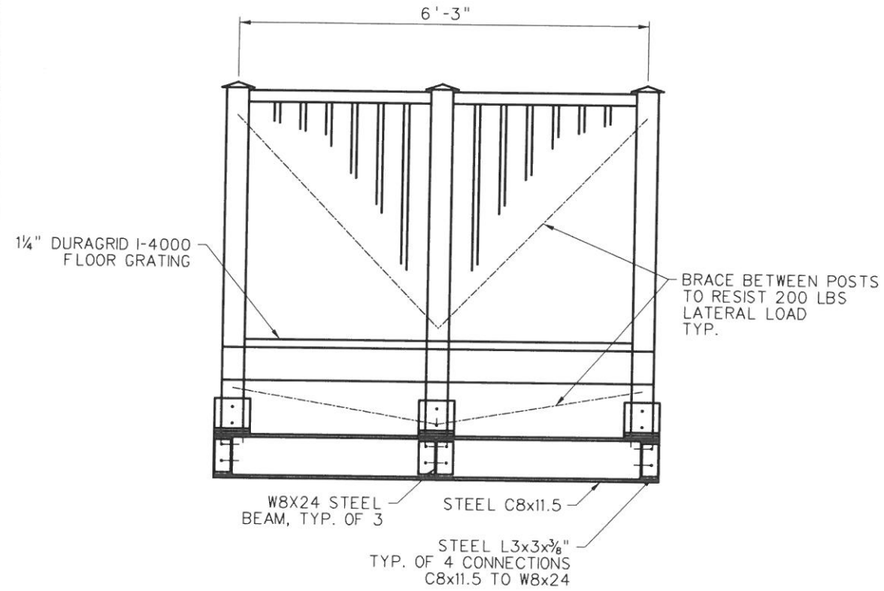

REFUGE BAY ELEVATION

SCALE: ⅞" = 1'-0"

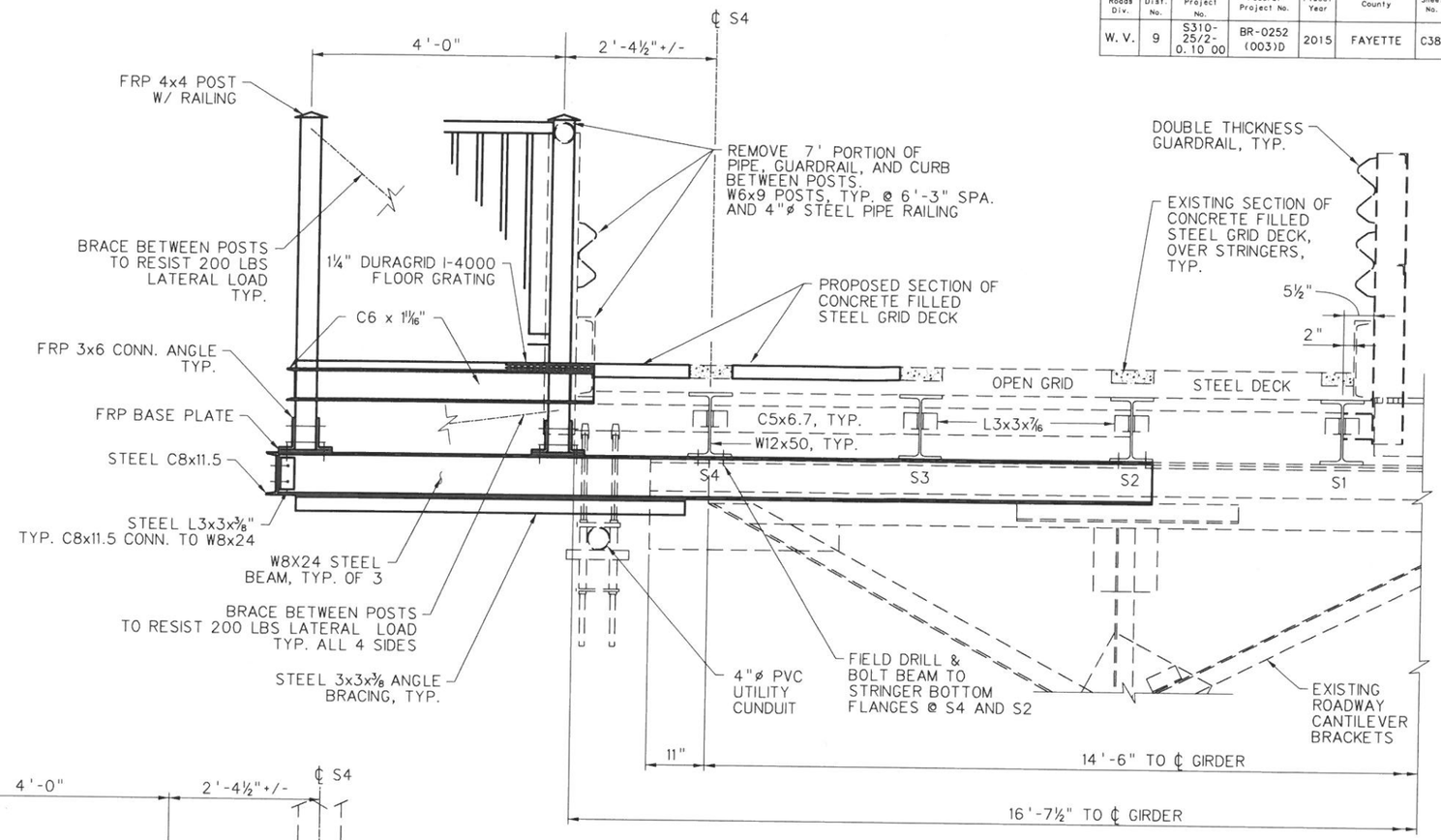

SECTION Q-Q
REFUGE BAY TYPICAL SECTION (R1)

SCALE: ⅞" = 1'-0"

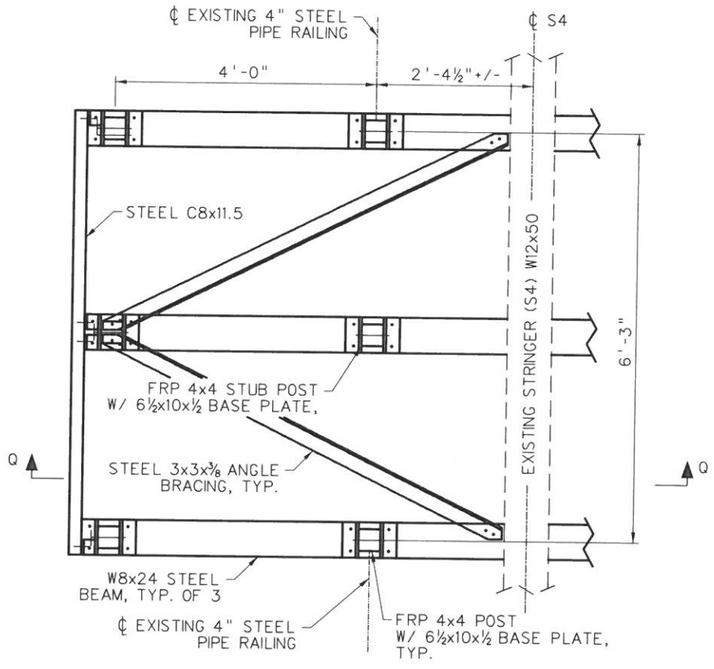

REFUGE BAY LOWER PLAN

SCALE: ⅞" = 1'-0"

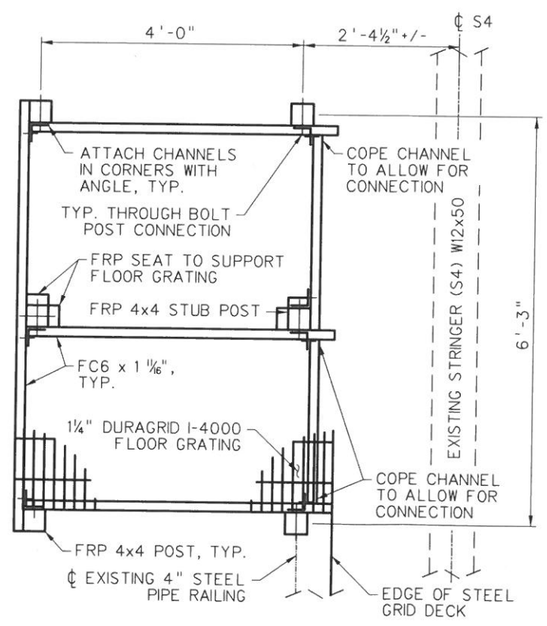

REFUGE BAY UPPER PLAN

SCALE: ⅞" = 1'-0"

REPAIR (R1) NOTES:

1. FRP DETAILED DESIGN SHALL BE PERFORMED BY FRP MANUFACTURER. DETAILED SHOP DRAWINGS AND CALCULATIONS SHALL BE SUBMITTED FOR APPROVAL AND STAMPED BY A PROFESSIONAL ENGINEER REGISTERED IN THE STATE OF WEST VIRGINIA.
2. BASIS OF DESIGN IS STRONGWELL, INC. FRP SHALL BE EXTREN 525 OR 625 AS MANUFACTURED BY STRONGWELL. MATERIALS, DESIGN AND FABRICATION SHALL BE PER CURRENT VERSION OF STRONGWELLS DESIGN MAUNUAL AND SPECIFICATIONS. ALTERNATIVE MANUFACTURERS ARE ACCEPTABLE IF SHOWN TO BE EQUAL TO STRONGWELL.
3. COLOR OF ALL MATERIALS SHALL MATCH, BLACK OR GRAY.
4. ALL CONNECTION HARDWARE SHALL BE STAINLESS STEEL.
5. RAILING SYSTEM SHALL BE STRONGWELL STRONGRAIL SYSTEM. SUBMIT OPTIONS FOR DECORATIVE RAILINGS AND POST CAPS AVAILABLE. RAILING SHALL BE INDEPENDENT OF THE EXISTING PIPE RAILING SYSTEM.
6. USE BONDING ADHESIVE ON CONNECTIONS AS REQUIRED.
7. ALL CONNECTIONS SHALL HAVE A MINIMUM OF 2 BOLTS. MINIMUM SIZE STRUCTURAL BOLTS SHALL BE ⅝" DIAMETER.
8. USE LOCKING WASHERS ON ALL BOLTS AND CUT THEADS TO PREVENT REMOVAL.

REVISION NUMBER	SHEET NUMBER	REVISION	DATE	BY

THE WEST VIRGINIA DEPARTMENT OF TRANSPORTATION
DIVISION OF HIGHWAYS

THURMOND BRIDGE RENOVATION REFUGE BAY PLAN & TYP. SECTION

DESIGNED	DATE
RMH	10/14
DRAWN JMB	10/14
CHECKED JDH	5/15
CHECKED	

[redacted]

PARKERSBURG, WV **BURGESS & NIPLE**

SHEET C38 OF C47

BRIDGE NO. 903.2

J04C22C03 - BRIDGE b

P:\P5027\Cadd\01-Rep_Observation bsy.dgn 9/17/2015 1:36:07 PM

STRONGWELL®

STRONGRAIL®

ARCHITECTURAL FIBERGLASS HANDRAIL AND FENCING SYSTEMS

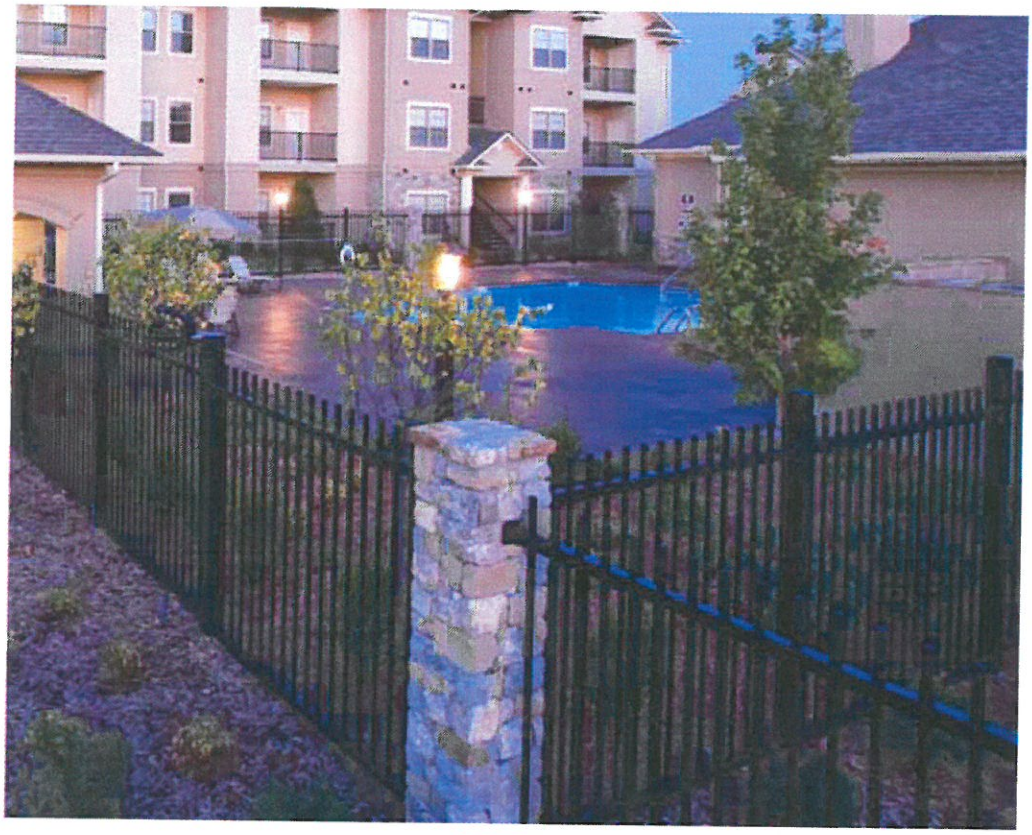

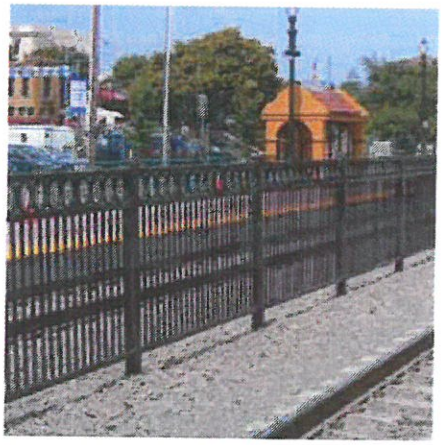

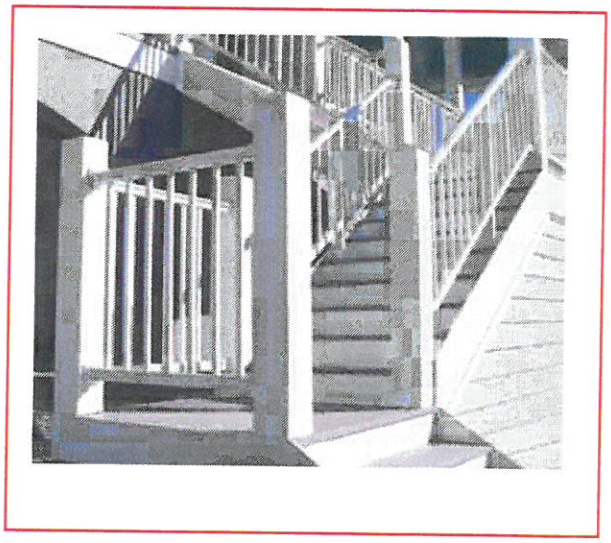

STRONGRAIL® Architectural Fiberglass Handrail and Fencing Systems

STRONGRAIL® architectural handrail technology integrates aesthetic appeal with an easy-to-install, cost-effective picket rail system for 1st Class Homes NC in Topsail Island, North Carolina.

The Moody Gardens Convention Center parking garage in Galveston, Texas is also outfitted with STRONGRAIL®. The durable fiberglass architectural handrail system is the ideal solution for a building that experiences high levels of traffic like this one.

STRONGRAIL® architectural handrail and fencing systems are a strong, attractive and safe solution to your structural needs. The standard systems are fabricated from pultruded fiberglass components produced by Strongwell and molded thermoplastic connectors. The railing systems are particularly well-suited to corrosive environments like those found in commercial structures with urban and salt air corrosion. Systems can be made to meet ADA requirements, adding safety and beauty to your property.

STRONGRAIL® architectural fiberglass handrail and fence systems are:

- Corrosion resistant
- Structurally strong
- Impact resistant
- Lightweight
- Easy to field install
- Low in thermal conductivity
- Low electrical conductivity

STRONGRAIL® systems are the result of more than 40 years of experience in the manufacture, design and fabrication of fiberglass handrail and fence systems. The systems offer the following advantages:

- **Ease of Assembly** — STRONGRAIL® systems are produced in lightweight standard sections that include both post and rail. Systems can be prefabricated in large sections and shipped to the site for easy installation with simple carpenter tools.
- **Cost Effective** — An easy-to-install design provides reduced labor and maintenance, resulting in long-term savings and elimination of the cost and inconvenience of "downtime for repairs."
- **Internal Connection System** — All connections fit flush, resulting in a pleasing, streamlined appearance. The internal connections allow the construction of continuous handrail systems.
- **Safety Features** — STRONGRAIL® systems feature low electrical conductivity and exhibit high strength. Systems meet IBC 2009 with a 2:1 factor of safety with a 4-foot (1200mm) maximum post spacing.
- **Low Maintenance** — Corrosion resistant fiberglass with molded-in color will outlast aluminum or steel systems with virtually no maintenance.

An industrial grade polyurethane UV coating is standard on all STRONGRAIL® architectural fiberglass handrail and fencing systems. Also, a polyester resin system is standard for Strongwell's architectural handrail systems but other resin systems are available upon request.

Materials of Construction

STRONGRAIL® is an engineered composite consisting of:

- Continuous glass fibers
- Two continuous strand glass mats
- A synthetic surfacing veil
- Fire-retardant polyester resin

This unique combination provides the ultimate in strength, stiffness and long-term corrosion and UV protection.

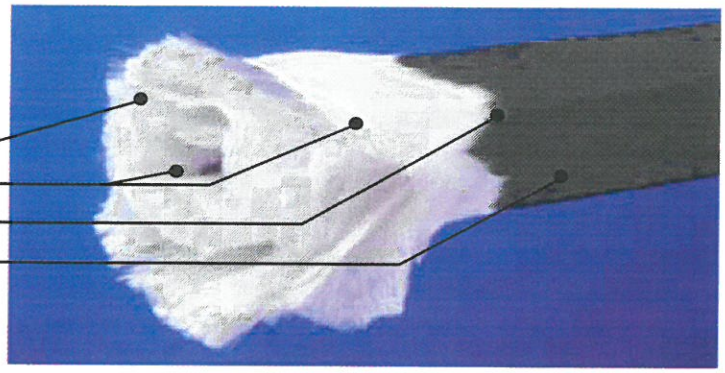

Standard STRONGRAIL® Options

When choosing the best STRONGRAIL® fiberglass architectural handrail system for your project, several options are available to achieve the look you need.

- **Top Railing:** 2" square top rails or 3" rounded top rails
- **Pickets:** square or round
- **Colors:** white or black color (other custom colors are available upon request)

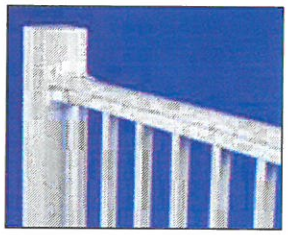

Rounded STRONGRAIL® system with square pickets in white.

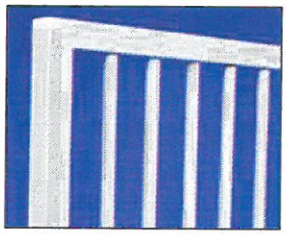

White, square STRONGRAIL® system with round pickets.

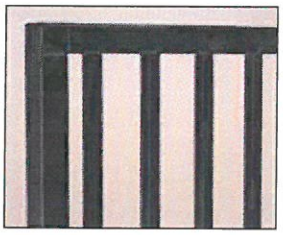

Square, black STRONGRAIL® system with square pickets.

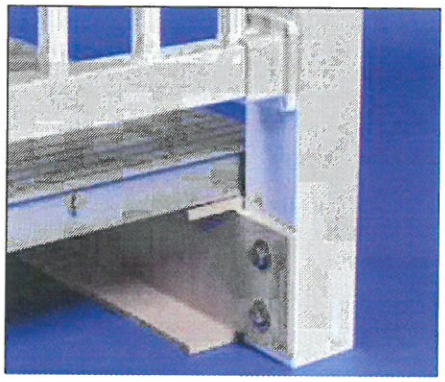

STRONGRAIL® architectural handrail and fencing systems mount quickly and easily to posts and walls.

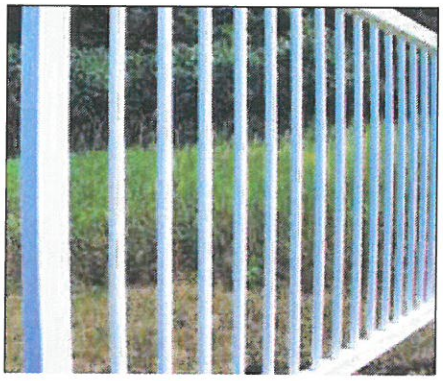

A white, square STRONGRAIL® architectural handrail system with round pickets.

STRONGRAIL® Handrail Applications

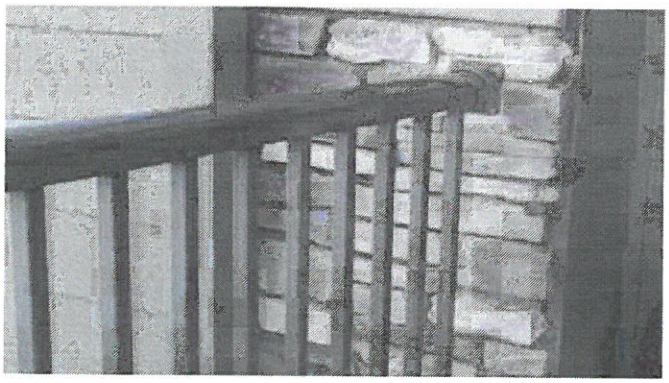

STRONGRAIL® with square pickets and a rounded top rail was produced in a custom color to compliment the exterior of this residential area.

This sun deck wrapped with STRONGRAIL® will outlast wood, PVC, aluminum and steel systems with virtually no maintenance.

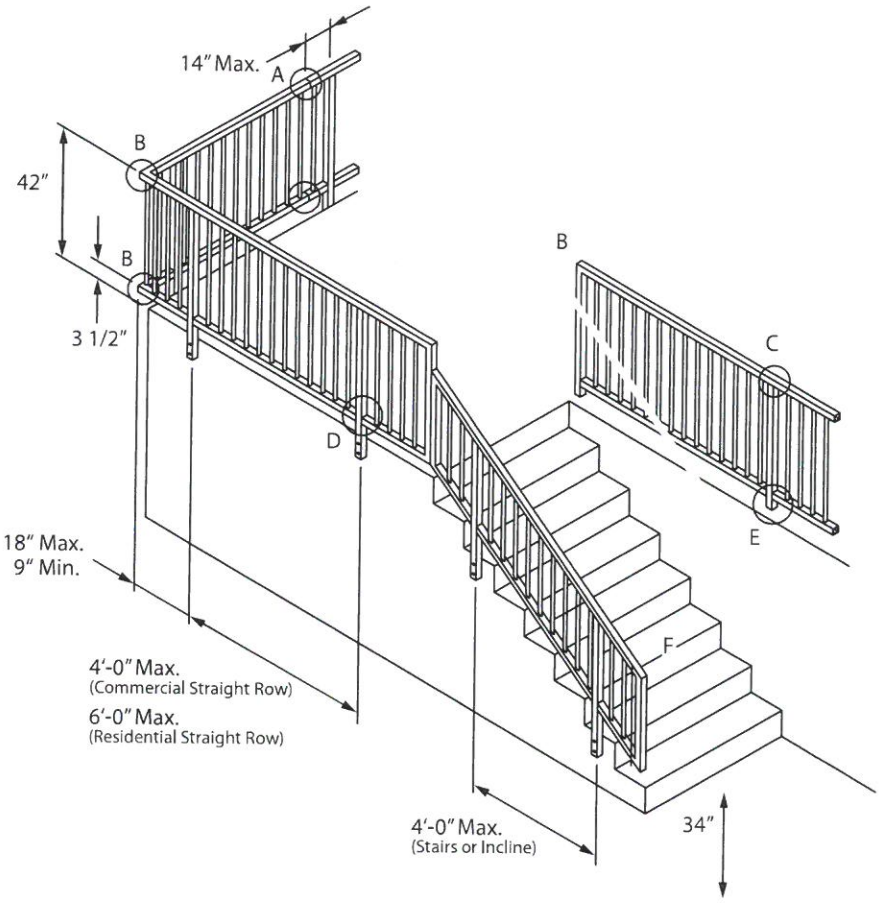
14" Max.
A
B
42"
B
3 1/2"
B
C
D
E
18" Max.
9" Min.
F
4'-0" Max.
(Commercial Straight Row)
6'-0" Max.
(Residential Straight Row)
4'-0" Max.
(Stairs or Incline)
34"

Typical 3" Rounded Top Rail Construction

Picket Specifications
Pickets are available as 1" round or 1" square tubes spaced at 4.75" on center.

Connection Details
All components secured with an epoxy adhesive.

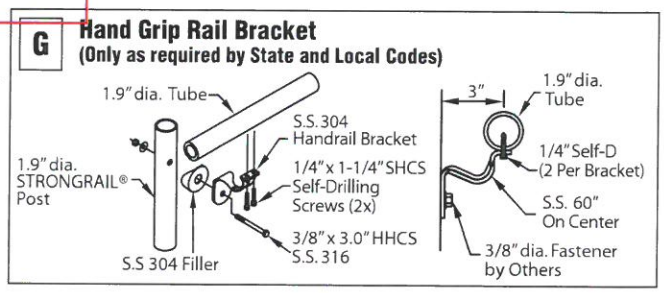

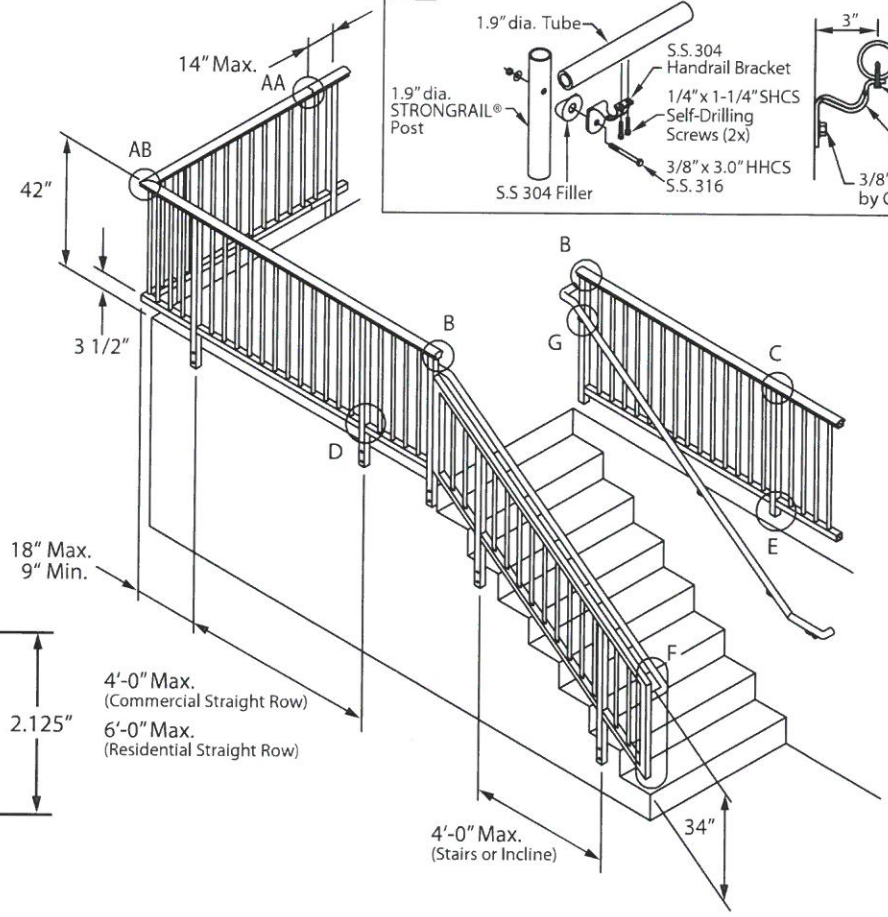

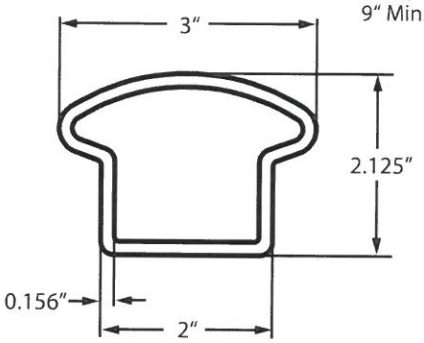

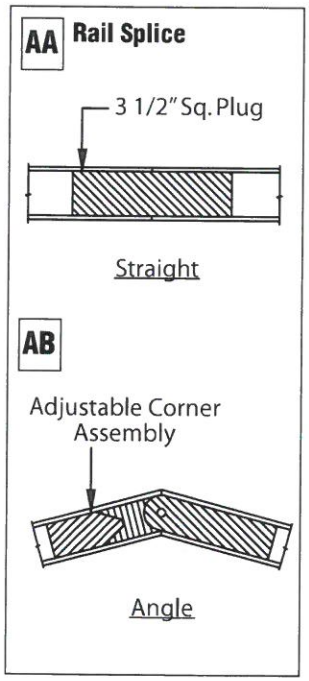

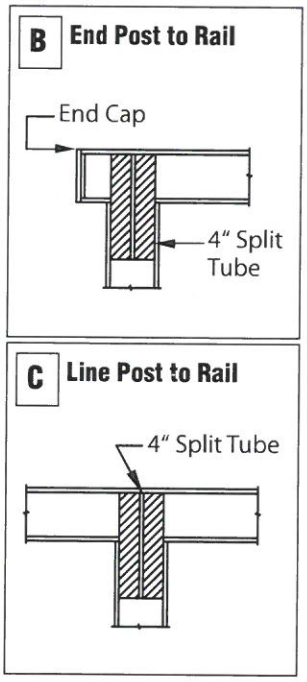

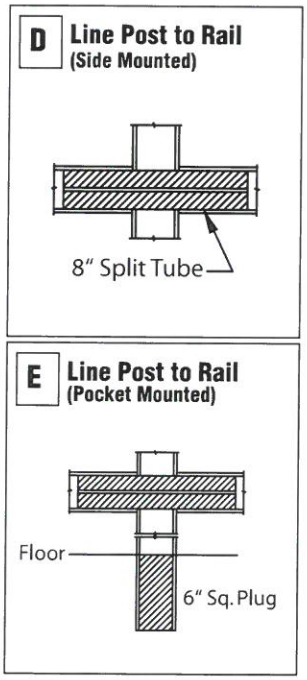

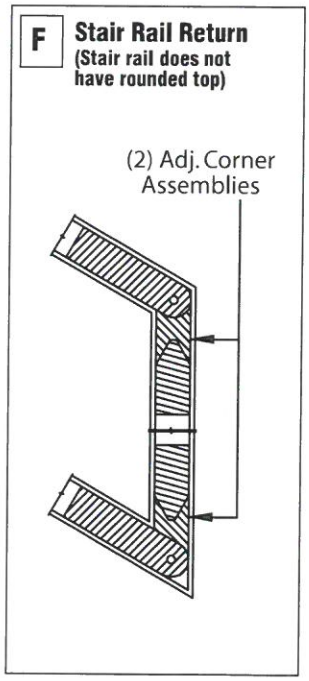

Typical 2" Square Wall or Post Construction

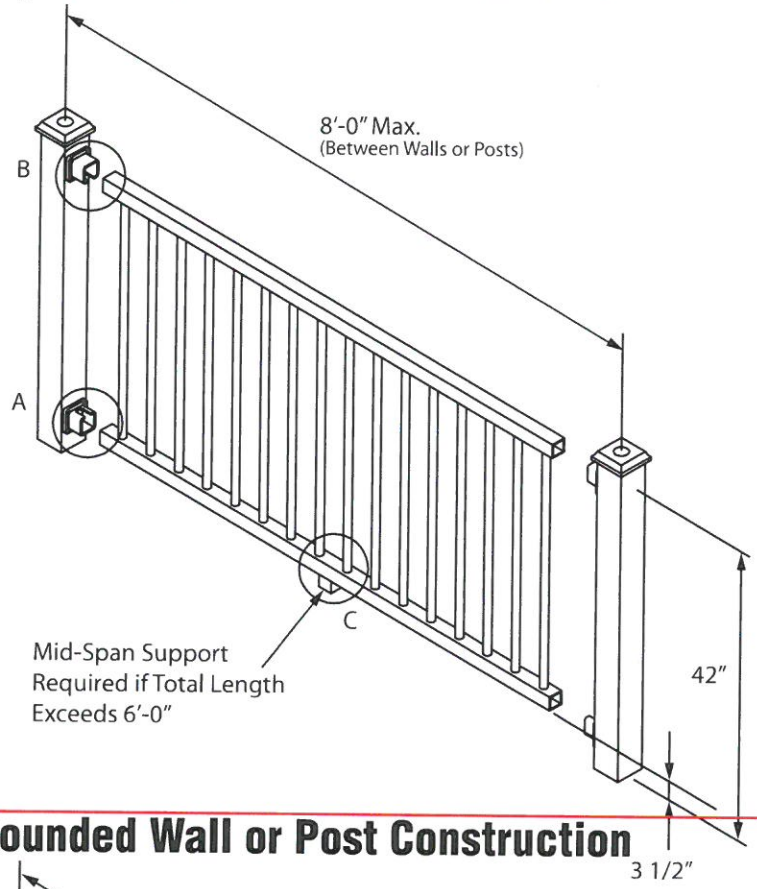

Typical 3" Rounded Wall or Post Construction

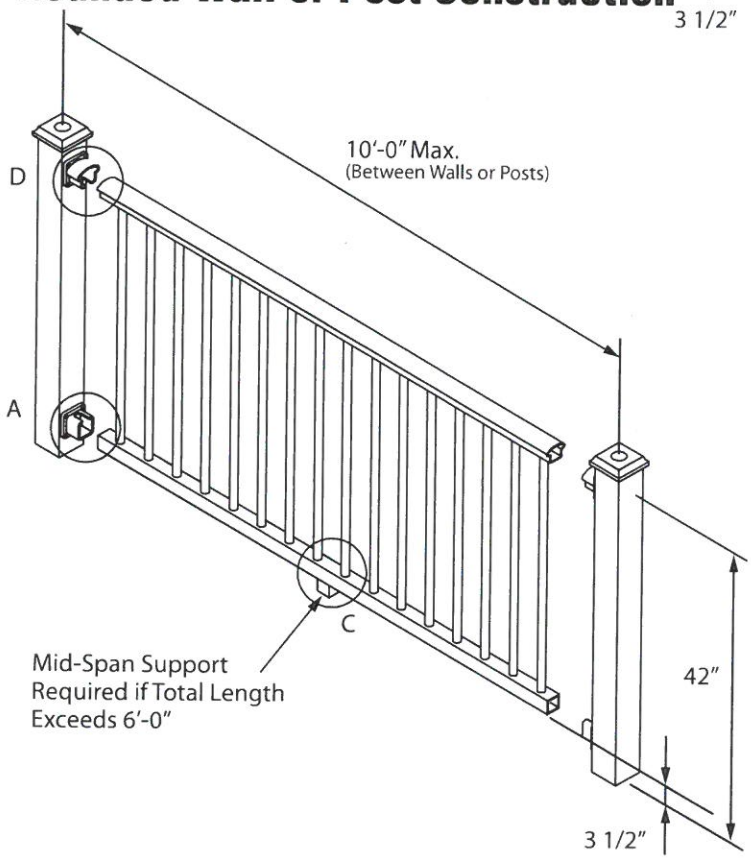

Connection Details

All components secured with an epoxy adhesive.

A End Bracket 2" Square Tube

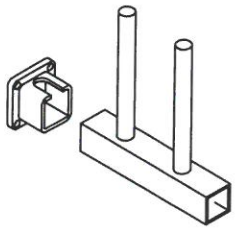

B End Bracket 2" Square Tube

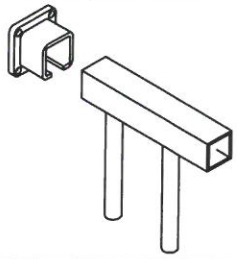

C Mid-Span Support

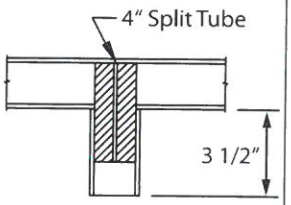

D End Bracket 3" Rounded Top

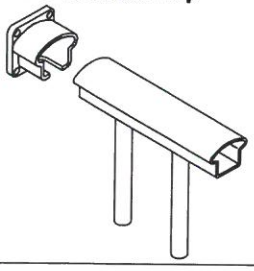

STRONGRAIL® Architectural Fencing Systems

Design Criteria

- **Maximum bending moment on post**: 8400 in.-lb. (Lateral load, P = 200 lb. is applied at height of 42 inches above base)
- **Wind load**: 30 psf (Applied as a concentrated load to the top of post)
- **Square Rail and Post dimensions:** 2" x 2" x 0.156" or 4" x 4" x 0.156"
- **Picket diameter:** 1.0 inch
- **Picket spacing:** 4.75 inches on center

STRONGRAIL® 2" x 2" Post Spacing

FENCE HEIGHT	MAXIMUM SPAN	RECOMMENDED SPAN	PICKETS PER SPAN
48" (4.0')	115"	96" (8.0')	19
60" (5.0')	77"	72" (6.0')	14
72" (6.0')	53"	48" (4.0')	9

NOTE: For fence height above 72" (6.0') contact Strongwell.

Alternate Post Base Plate Detail

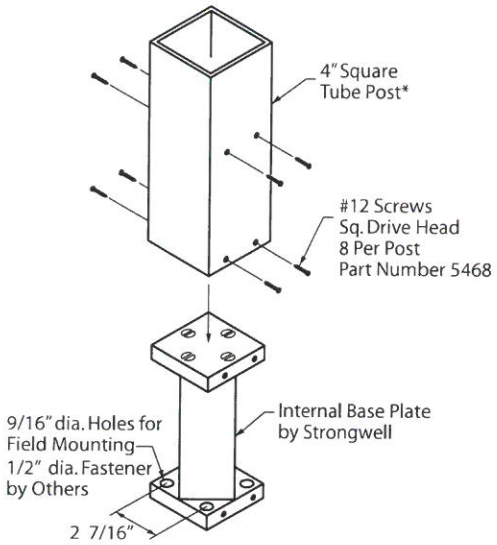

* 4" x 4" square tube post may be spaced 10' on center.

STRONGRAIL® Fencing Applications

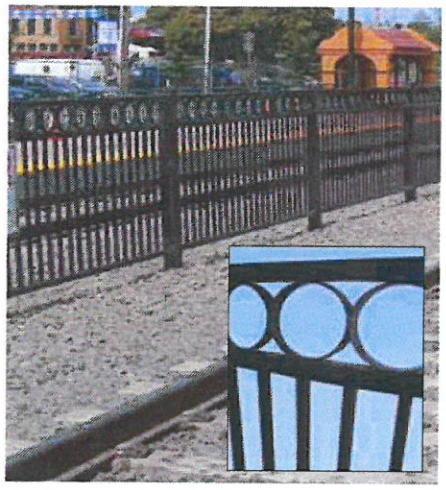

Crusader Fence Co, Inc. selected STRONGRAIL® fiberglass architectural fencing system for customer San Mateo County Transit District in California. The handrail serves as a safety fence, preventing pedestrians from contacting electrified train track rails.

STRONGRAIL® outlines the entrance to the New Mexico Military Institute. The fiberglass fencing's low maintenance, ease of installation and aesthetic quality were driving factors behind the institute's selection of STRONGRAIL®.

Rupe Building Co. installed Strongwell's maintenance-free fiberglass fencing (foreground) & handrail (background) for this apartment complex in Oklahoma. The fencing mimics the "wrought iron look" without rusting worries.

Custom Handrail and Fencing Applications

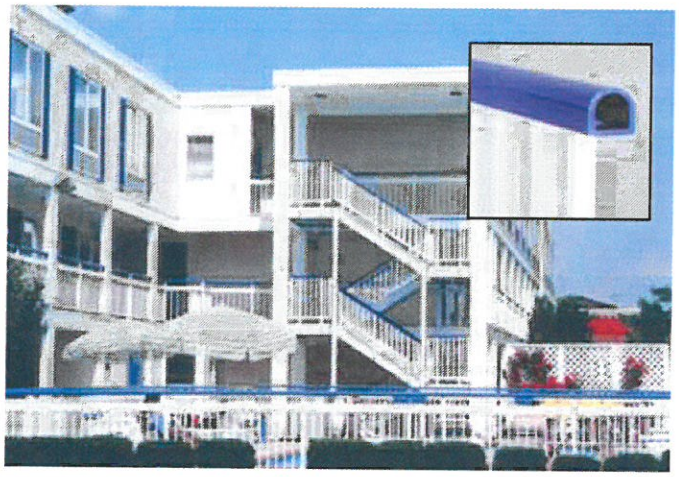

This custom half round top rail is used by Fairfield Inn hotels to reduce maintenance and provide long lasting good looks.

A custom handrail system installed for Karlo's Bistro blends with surrounding architecture and adds aesthetic appeal.

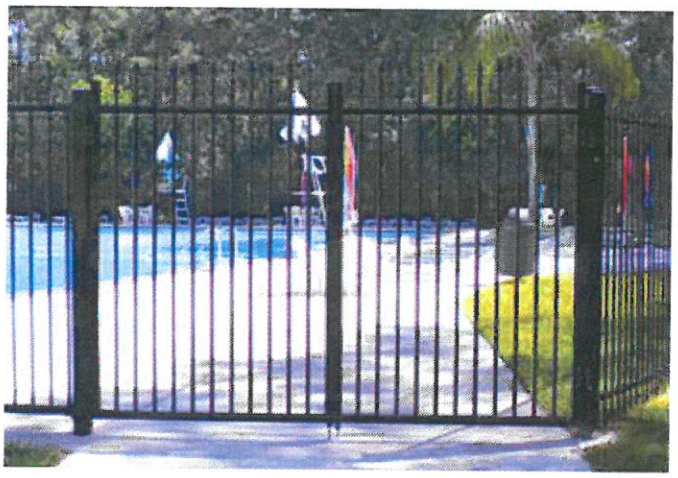

An 8' tall, custom fiberglass fence replaced wrought iron at this Kingwood, Texas community pool. The fiberglass fence provides aesthetic appeal like the wrought iron, but without the corrosion problems faced at a pool side environment.

The Moody Gardens Theme Park has embraced the low maintenance and corrosion resistance of Strongwell's custom fiberglass handrail systems. A day dock at the popular destination features an ADA compliant custom handrail system that uses several of Strongwell's pultruded fiberglass structural profiles.

STRONGWELL

ISO-9001: 2008 Certified Manufacturing Plants

BRISTOL DIVISION
400 Commonwealth Ave., P. O. Box 580, Bristol, VA 24203-0580 USA
(276) 645-8000 Fax (276) 645-8132

CHATFIELD DIVISION
1610 Highway 52 South, Chatfield, MN 55923-9799 USA
(507) 867-3479 Fax (507) 867-4031

www.strongwell.com

ST0711
© 2011 Strongwell

WEST VIRGINIA
Division of Culture and History

RECEIVED
NOV 24 2015
ENGINEERING DIVISION

The Culture Center
1900 Kanawha Blvd., E.
Charleston, WV 25305-0300
Randall Reid-Smith, Commissioner
Phone 304.558.0220 • www.wvculture.org
Fax 304.558.2779 • TDD 304.558.3562
EEO/AA Employer

November 20, 2015

Mr. Ben L. Hark
Environmental Section Head, Engineering Division
West Virginia Division of Highways
1334 Smith Street
Charleston, West Virginia 25301

RE: Thurmond Bridge Rehabilitation Project
State Project: S310-25/2-0.10 / Federal Project: BR-0252(001) D
FR# 14-776-FA-6

Dear Mr. Hark:

We have reviewed the above mentioned project to determine its effects to cultural resources. As required by Section 106 of the National Historic Preservation Act of 1966, as amended, and its implementing regulations, 36 CFR 800: "Protection of Historic Properties," we submit our comments.

According to submitted information, the West Virginia Division of Highways (DOH) proposes to rehabilitate the Thurmond Bridge which spans the New River in Fayette County, WV. The scope of work includes stabilization, strengthening, and repair of the bridge. The preferred alternative incorporates the addition of refuge bays on the upstream (east) side of the bridge. The refuge bays address pedestrian safety concerns identified by the National Park Service.

We have reviewed the revised Memorandum of Agreement (MOA). We believe that the stipulations present appropriate mitigation measures for the adverse effect to the Thurmond Bridge, listed in the National Register of Historic Places (NRHP). We note that the Town of Thurmond and the National Park Service, consulting parties for this project's consultation - are included as signatories. We request that you provide our office with a copy of the fully executed MOA.

We appreciate the opportunity to be of service. *If you have questions regarding our comments or the Section 106 process, please contact Jeffrey S. Smith, Structural Historian, at (304) 558-0240.*

Sincerely,

Susan M. Pierce

Susan M. Pierce
Deputy State Historic Preservation Officer

SMP/JSS