BRIDGE DESIGN MANUAL

WEST VIRGINIA DEPARTMENT OF TRANSPORTATION
DIVISION OF HIGHWAYS
ENGINEERING DIVISION

March 1, 2004

Includes 2006 Interim and Errata

FOREWORD

This Bridge Design Manual was prepared by SITE-Blauvelt Engineers, Inc. for the West Virginia Division of Highways (WVDOH), Engineering Division. This manual is intended to be a guide for Engineers working on bridge design projects for the WVDOH. It provides policies, procedures and methods for developing and documenting the design process. It is not intended to replace the engineering analysis and judgment that must be applied to each project. The benefits of this Manual will be the standardization of: the structure design process, common details, and the layout of the contract plans. In addition, it will provide minimum design standards for structures in West Virginia and provide interpretation and consistency in the application of the AASHTO Specifications.

The layout of the Bridge Design Manual follows the general steps involved in the bridge development process. It begins with Section 1 - Introduction, which discusses scope and limitations. Next, in Section 2 the information necessary for the preliminary design process is presented. Following the preliminary design process, the criteria for final bridge design and detailing are given in Section 3. Section 4 focuses on general plan presentation, including CADD standards. Sections 5 and 6 contain WVDOH standard drawings and generally accepted computer design software, respectively. Shop drawing requirements are given in Section 7. Finally, the Appendices provide additional information regarding plan notes, permit checklists, bridge design forms, coatings and references. A Glossary and Index are also provided for convenience.

Revisions to this Manual will be made on a yearly bases. The revisions will be handled, as interims and the Manual will be republished as deemed necessary by the WVDOH.

Prepared by:

SITE BLAUVELT
ENGINEERS
a TRC company

One Kenton Drive, Suite 200
Charleston, West Virginia 25311-1256
Phone: (304) 346-2599
Fax: (304) 346-2591

PRINTED BY WVDOT OFFICE SERVICES DIVISION

2003
First Edition

TABLE OF CONTENTS

FOREWORD iii

SECTION 1 - INTRODUCTION

1.1 POLICY 1-1
1.1.1 Scope 1-1
1.1.2 Limitations 1-1

SECTION 2 - BRIDGE DEVELOPMENT PROCESS

2.1 PROJECT DESIGN CRITERIA 2-1
2.1.1 Typical Deck Transverse Section 2-1
2.1.2 Environmental Documentation 2-1
2.1.3 Right-of-Way 2-2
2.1.4 Line and Grade Geometrics 2-2
2.1.5 Highway Drainage 2-2
2.1.6 Existing Project Related Information 2-2
2.1.7 Hydrology and Hydraulics 2-2
2.2 BRIDGE LAYOUT CRITERIA 2-3
2.2.1 Geometric Guidelines 2-3
2.2.2 Bridge Length 2-6
2.2.2.1 Stream Crossings 2-6
2.2.2.2 Highway Crossings 2-7
2.2.2.3 Railroad Crossings 2-7
2.2.2.4 Cultural and Natural Resources Crossings 2-7
2.3 GEOTECHNICAL INVESTIGATIONS 2-7
2.3.1 Introduction 2-7
2.3.2 Structure Boring Requirements 2-9
2.3.2.1 Bridges 2-9
2.3.2.2 Approach Embankments 2-10
2.3.2.3 Retaining Walls and Miscellaneous Structures 2-11
2.3.3 Geotechnical Tasks 2-11
2.3.3.1 Planning, Development, and Engineering Phase 2-11
2.3.3.2 Project Design Phase 2-11
2.3.3.3 Construction Phase 2-12
2.3.3.4 Post-Construction Phase 2-12
2.4 STRUCTURAL SYSTEM SELECTION 2-12
2.4.1 Steel Superstructure Types 2-13
2.4.1.1 Rolled Beams 2-14
2.4.1.2 Plate Girders 2-14
2.4.1.3 Box Girders 2-16

2.4.1.4 Trusses 2-17
2.4.1.5 Cable Stayed 2-17
2.4.1.6 Tied Arch 2-17
2.4.2 Concrete Superstructure Types 2-18
2.4.2.1 Slab Bridges 2-18
2.4.2.2 Box Beams 2-19
2.4.2.3 Prestressed Concrete Beams 2-19
2.4.2.4 Post-Tensioned I-Beams (Drop-In) 2-21
2.4.2.5 Segmental Concrete Boxes 2-21
2.4.2.6 Cable Stayed 2-22
2.4.3 Abutment Types 2-22
2.4.3.1 Wall Abutment 2-22
2.4.3.2 Pedestals 2-22
2.4.3.3 Stub Abutment 2-23
2.4.3.4 Integral Abutment 2-23
2.4.3.5 Semi-Integral Abutment 2-23
2.4.3.6 Wingwalls 2-23
2.4.4 Pier Types 2-24
2.4.4.1 Cap-and-Column Type Piers 2-24
2.4.4.2 T-Type or Hammerhead or Wall Type Piers 2-24
2.4.4.3 Post-Tensioned Concrete/Integral Pier Caps 2-24
2.4.4.4 Steel Pier Caps 2-24
2.4.5 Foundation Types 2-24
2.4.5.1 Spread Footing 2-25
2.4.5.2 Piling 2-25
2.4.5.3 Drilled Caissons 2-25
2.5 ADDITIONAL DESIGN CONSIDERATIONS 2-26
2.5.1 Curved Bridges 2-26
2.5.2 Slope Stability 2-26
2.5.3 Aesthetics 2-27
2.5.4 Approval of Vendor Supplied Products 2-27
2.5.5 Protective Fencing 2-28
2.6 MISCELLANEOUS STRUCTURES 2-29
2.6.1 Timber Structures 2-29
2.6.2 Pedestrian Structures 2-29
2.6.3 Buried Structures 2-29
2.7 BRIDGE REHABILITATION 2-30
2.7.1 Bridge Inspection 2-30
2.7.2 Widening 2-31
2.7.3 Rehabilitation Techniques 2-31
2.7.3.1 Steel 2-32
2.7.3.1.1 Cracks 2-32
2.7.3.1.2 Painting 2-33
2.7.3.1.3 Fatigue 2-33
2.7.3.1.4 Section Loss 2-33
2.7.3.2 Concrete 2-36

2.7.3.2.1 Concrete Decks 2-37
2.7.3.2.2 Deck Overlays 2-37
2.7.3.3 Additional Rehabilitation Issues 2-37
2.7.3.4 Timber 2-38
2.7.3.5 Deck Joints 2-38
2.7.3.5.1 Open Joints 2-39
2.7.3.5.2 Closed Joints 2-39
2.7.3.6 Bearings 2-40
2.7.3.7 Historical Structures 2-41
2.8 BRIDGE PERMITS 2-41
2.8.1 Coast Guard 2-41
2.8.2 U. S. Army Corps of Engineers 2-43
2.8.3 106 Process (Historic) 2-43
2.9 ALTERNATE BRIDGE DESIGN 2-44
2.10 RAILROAD CONSIDERATIONS 2-44
2.10.1 Approval 2-44
2.10.2 Crash Walls 2-44
2.10.3 Clearances 2-46
2.10.4 Drainage 2-46
2.11 BRIDGE DOCUMENT SUBMISSIONS 2-47
2.11.1 Design Report 2-47
2.11.2 Pre-Span Arrangement Meeting 2-47
2.11.3 Span Arrangement Study 2-48
2.11.4 Type, Size and Location (TS&L) 2-49
2.11.4.1 Geotechnical Report 2-51
2.11.5 Final Detail Plans 2-51
2.11.6 Plans, Specifications and Estimates (PS&E) 2-51
2.11.6.1 Establishing Contract Duration 2-52
2.11.6.2 Engineer's Cost Estimate 2-53
2.11.7 Tracings 2-53

SECTION 3 - DESIGN

3.1 DESIGN CRITERIA 3-1
3.1.1 Working Stress Design 3-1
3.1.2 Strength Design (LFD) 3-1
3.1.3 Load and Resistance Factor Design (LRFD) 3-1
3.1.4 Loads and Load Factors 3-1
3.1.4.1 Loads 3-1
3.1.4.1.1 Permanent Loads 3-2
3.1.4.1.2 Live Loads 3-2
3.1.4.1.3 Vehicular Collision Force 3-2
3.1.4.1.4 Ice and Snow Loads 3-3
3.1.4.1.5 Earthquake Effects 3-3
3.1.4.1.6 Force Effects due to Temperature 3-3

3.1.4.1.7 Vessel Collision Force 3-3
3.1.4.1.8 Construction Loading 3-4
3.1.4.2 Limit States and Load Factors 3-4
3.1.4.3 Live Load Distribution Factors 3-5
3.1.5 Materials 3-5
3.1.5.1 Concrete 3-5
3.1.5.2 Reinforcing Steel 3-6
3.1.5.3 Structural Steel 3-6
3.1.5.4 Prestressing Steel 3-6
3.1.6 Curved Superstructure Design Criteria 3-6
3.2 DECKS 3-7
3.2.1 Design of Concrete Deck Slabs 3-7
3.2.1.1 Deck Overhangs 3-8
3.2.1.2 Removable Forms 3-8
3.2.1.3 Permanent Metal Deck Forms 3-8.1
3.2.1.4 Deck Protection Criteria 3-9
3.2.2 Barriers 3-9
3.2.2.1 Continuous Barriers for Deflection Control of Bridges 3-10
3.2.3 Construction Sequences 3-11
3.2.4 Deck Drainage 3-11
3.2.5 Deck Surface Preparation 3-13
3.2.6 Steel Grid Decks 3-13
3.2.7 Timber Decks 3-14
3.2.8 Sidewalks 3-14
3.3 STEEL SUPERSTRUCTURES 3-14
3.3.1 Material Properties 3-15
3.3.1.1 Specifying Grade, Toughness Level and Special Provisions 3-15
3.3.1.1.1 Grade 3-15
3.3.1.1.2 Toughness 3-15
3.3.1.1.3 Special Provisions 3-15
3.3.1.2 Limitations of Grade Selection 3-15
3.3.2 Design Guidelines 3-16
3.3.2.1 Web Plates 3-16
3.3.2.1.1 Transverse Intermediate Stiffeners 3-17
3.3.2.1.2 Diaphragm Connection Plates 3-17
3.3.2.1.3 Bearing Stiffeners 3-17
3.3.2.1.4 Auxiliary Stiffeners 3-21
3.3.2.1.5 Longitudinal Stiffeners 3-21
3.3.2.1.6 Jacking Stiffeners 3-21
3.3.2.2 Flange Plates 3-21
3.3.2.3 Erection Requirements 3-23
3.3.3 Fatigue 3-23
3.3.4 Fracture Critical 3-23
3.3.5 Diaphragms, Cross Frames and Lateral Bracing 3-23
3.3.6 Connection Design 3-25
3.3.6.1 Welded Connections 3-25

3.3.6.2 Bolted Connections 3-26
3.3.7 Non-Destructive Testing (NDT) Requirements 3-26
3.3.7.1 Straight Beam and Girder Bridges 3-27
3.3.7.2 Curved or Other Complex Bridges 3-27
3.3.8 Composite Construction 3-27
3.3.8.1 Limits of Composite Regions 3-27
3.3.8.2 Steel Stud Shear Connectors 3-28
3.3.9 Weathering Steel 3-28
3.3.9.1 General Guidelines 3-28
3.3.9.2 Site Selection and Design Details 3-28
3.3.10 Steel Curved Girder Bridges 3-29
3.4 CONCRETE SUPERSTRUCTURES 3-31
3.4.1 General 3-31
3.4.2 Prestressed Concrete Beams 3-32
3.4.2.1 Requirements for Prestressed Beams 3-32
3.4.3 Adjacent Box Beams 3-33
3.4.3.1 Alteration of Standard Sheets 3-34
3.4.3.2 Design Loading 3-34
3.4.3.3 Odd Length Beams 3-34
3.4.3.4 Additional Design Information 3-35
3.4.4 Segmental Concrete Structures 3-37
3.4.4.1 Introduction 3-37
3.4.4.2 Methods of Construction 3-37
3.4.4.3 Specifications 3-37
3.4.4.4 Notation 3-38
3.4.4.5 Loadings 3-38
3.4.4.5.1 Thermal Effect 3-38
3.4.4.5.2 Creep and Shrinkage 3-38
3.4.4.5.3 Prestressing 3-39
3.4.4.6 Materials 3-39
3.4.4.6.1 Concrete 3-39
3.4.4.6.2 Prestressing Steel 3-40
3.4.4.7 Allowable Stresses 3-41
3.4.4.7.1 Concrete Allowable Stresses 3-41
3.4.4.7.2 Prestressing Allowable Stresses 3-41
3.4.4.8 Box Girder Proportions 3-41
3.4.4.9 Analysis Method and Mathematical Computer Modeling 3-42
3.4.4.10 Design Method 3-42
3.4.4.11 Shear and Torsion 3-43
3.4.4.12 Total Web Reinforcement 3-43
3.4.4.13 Segmental Construction Joints 3-43
3.4.4.14 Shear Keys 3-44
3.4.4.15 Erection Schedule and Construction 3-44
3.4.4.16 Construction Data Elevations and Camber Curve 3-44
3.4.4.17 Integrated Drawings 3-45
3.4.5 Miscellaneous Shapes/Types 3-45

3.5 TIMBER SUPERSTRUCTURES 3-45
3.5.1 Limitations 3-45
3.5.2 Types 3-46
3.5.2.1 Glulam System 3-46
3.5.2.2 Longitudinal Glulam Deck 3-46
3.5.3 Design Procedure 3-46
3.6 BEARINGS 3-47
3.6.1 Bearing Design Criteria 3-48
3.6.2 Bearing Replacement 3-49
3.7 EXPANSION DEVICES 3-49
3.7.1 Transverse Joints 3-50
3.7.1.1 Thermal Movement Less Than Two Inches 3-50
3.7.1.2 Thermal Movement From Two to Four Inches 3-50
3.7.1.3 Thermal Movement Greater Than Four Inches 3-50
3.7.2 Longitudinal Joints 3-53
3.8 ABUTMENTS 3-53
3.8.1 Abutment Design Criteria 3-53
3.8.2 Bridge Seat 3-53
3.8.3 Backwalls 3-59
3.8.4 Stem 3-59
3.8.5 Wingwalls 3-59
3.8.6 Foundation 3-60
3.9 JOINTLESS BRIDGE ABUTMENTS 3-62
3.9.1 Integral Abutments 3-62
3.9.2 Semi-Integral Abutments 3-68
3.10 RETAINING WALLS 3-69
3.10.1 Retaining Wall System Selection Process 3-70
3.10.1.1 Identify Need for an Earth Retaining System 3-70
3.10.1.2 Site Constraints and Project Requirements 3-70
3.10.1.3 Evaluation of Wall System Alternates 3-70
3.10.1.4 Wall System Selection 3-71
3.10.2 Permanent Retaining Walls 3-71
3.10.2.1 Gravity Walls 3-71
3.10.2.2 Cantilever Walls 3-71
3.10.2.3 Pile Walls 3-74
3.10.2.4 Tie-Back Walls (Anchored Walls) 3-74
3.10.2.5 Proprietary Walls 3-74
3.10.2.5.1 Concrete Panel 3-75
3.10.2.5.2 Modular Block 3-75
3.10.2.5.3 Wire Faced 3-75
3.10.2.5.4 Advantages and Disadvantages 3-76
3.10.2.5.5 Designer Notes 3-76
3.10.3 Temporary Retaining Walls 3-77
3.10.3.1 Example Drawings 3-77
3.10.4 Shop Drawing Review 3-77

3.11 PIERS 3-82
3.11.1 Pier Caps 3-82
3.11.2 Pier Columns 3-82
3.11.3 Pier Foundations 3-83
3.12 FOUNDATIONS 3-83
3.12.1 General 3-83
3.12.2 Spread Footings 3-83
3.12.3 Pile Foundations 3-84
3.12.4 Drilled Caisson Foundations 3-85
3.12.5 Slope and Foundation Protection 3-86
3.12.5.1 Slope Protection 3-86
3.12.5.2 Foundation Protection 3-86
3.13 SCOUR 3-87
3.14 APPROACH SLABS 3-88
3.14.1 General 3-88
3.14.2 Design 3-88
3.14.2.1 Reinforcement 3-88
3.14.2.2 Joint Type Between Approach Slab and Approach Pavement or Bridge Transition Pavement 3-89
3.14.2.3 Detailing 3-89
3.15 LOAD RATING OF NEW BRIDGE DESIGN 3-89
3.15.1 Rating Computations 3-90
3.15.1.1 Tangent Structures – Steel Beams and Girders 3-91
3.15.1.1.1 Flexural Strength Rating 3-91
3.15.1.1.2 Shear Strength Rating 3-93
3.15.1.2 Tangent Structures – Prestressed Concrete Beams 3-93
3.15.1.3 Curved Structures – Steel Beams and Girders 3-95
3.15.1.3.1 Moment Ratings 3-95
3.15.1.3.2 Shear Ratings 3-96
3.15.1.4 Sample Calculations 3-97
3.15.1.4.1 Flexure Rating – Tangent Steel Girder 3-97
3.15.1.4.2 Moment Rating – Curved Steel Girder 3-100
3.15.1.4.3 Shear Rating – Steel Girder 3-103
3.15.1.4.4 Prestressed Concrete Beam 3-104
3.15.2 Conversion Factors for Refined Analyses 3-108
3.16 GUARDRAIL 3-109
3.17 BRIDGE IDENTIFICATION PLATE 3-109
3.18 CONDUIT ATTACHMENT TO BRIDGES 3-110
3.19 FUTURE INSPECTIONS 3-110
3.20 BRIDGE DEMOLITION/DISMANTLING PLAN 3-111
3.21 TEMPORARY STRUCTURES 3-111
3.22 SALVAGEABLE MATERIALS 3-111

SECTION 4 - GENERAL PLAN PRESENTATION

4.1 COMPUTER-AIDED DESIGN AND DRAFTING 4-1
4.1.1 Electronic Data Exchange Compatibility 4-1
4.1.1.1 Contract Plans 4-1
4.1.1.1.1 Graphic File Format 4-1
4.1.1.1.2 Identification and File Nomenclature 4-1
4.1.1.1.3 Media Data Formats 4-2
4.1.1.1.4 Electronic Data Submittal Checklist 4-2
4.1.2 Standard Drawings 4-3
4.1.2.1 Standard Details And Drawing Files 4-3
4.1.2.1.1 Standard Prestressed Concrete Box Beam Files 4-3
4.1.2.1.2 Cell and Resource Files 4-3
4.1.2.2 Dimensions 4-3
4.1.2.3 Physical Size Of Drawings, Scales 4-3
4.1.2.4 Sheet Size And Format 4-4
4.1.2.5 Scales 4-4
4.1.3 Level Methodology 4-4
4.2 ESTIMATE OF QUANTITIES 4-5
4.2.1 Accuracy of Quantity Estimates 4-5
4.2.1.1 Combine Work 4-7
4.2.1.2 New Bid Item Number 4-7
4.2.2 Round Off 4-7
4.3 STANDARD SPECIFICATIONS AND SPECIAL PROVISIONS 4-7
4.3.1 Standard Specifications 4-7
4.3.2 Supplemental Specifications 4-7
4.3.3 Special Provisions 4-8
4.3.3.1 Specification Hierarchy 4-8
4.4 BASIC LAYOUT – BRIDGES 4-9
4.4.1 Drawing Sequence 4-9
4.4.1.1 General Plan And Elevation 4-9
4.4.1.1.1 Bridges Over Waterways 4-10
4.4.1.1.2 Bridges Over Railroads 4-11
4.4.1.1.3 Bridges Over Roadways 4-11
4.4.1.2 Index Of Drawings 4-11
4.4.1.3 General Notes 4-12
4.4.1.4 Estimate Of Bridge Quantities 4-13
4.4.1.5 Construction Sequence 4-13
4.4.1.6 Temporary Construction Access 4-14
4.4.1.7 Foundation Layout 4-14
4.4.1.8 Substructure Drawings 4-14
4.4.1.8.1 Abutments 4-14
4.4.1.8.2 Piers 4-16
4.4.1.9 Superstructure Drawings 4-17
4.4.1.9.1 Framing Plan 4-17
4.4.1.9.2 Beam or Girder Elevation 4-18

4.4.1.9.3 Superstructure Details 4-18
4.4.1.10 Deck Drawings 4-20
4.4.1.10.1 Deck Layout 4-20
4.4.1.10.2 Typical Deck Section 4-21
4.4.1.10.3 Barrier and/or Sidewalk Details 4-21
4.4.1.10.4 Deck Construction Joints 4-21
4.4.1.11 Roadway Elevations And Dead Load Deflections 4-23
4.4.1.12 Miscellaneous Details 4-23
4.4.1.13 Erection Details 4-24
4.4.1.14 Approach Slabs 4-24
4.4.1.15 Situation Plan 4-25
4.4.1.16 Core Borings 4-26
4.4.1.17 Existing Bridge Plans 4-26
4.4.1.18 Load Rating Sheets 4-26
4.4.2 Reinforcing Schedules 4-27
4.5 BASIC LAYOUT – RETAINING WALLS 4-28
4.5.1 Drawing Sequence 4-28
4.5.1.1 General Notes 4-28
4.5.1.2 Index Of Drawings 4-29
4.5.1.3 Estimate Of Retaining Wall Quantities 4-29
4.5.1.4 Plan And Elevation 4-29
4.5.1.5 Typical Wall Sections 4-30
4.5.1.6 Reinforcing Schedules 4-31
4.5.1.7 Miscellaneous Details 4-32
4.5.1.8 Situation Plan 4-32
4.5.1.9 Core Borings 4-32

SECTION 5 - STANDARD DRAWINGS

5.1 STANDARD BRIDGE PLANS 5-1
5.2 TYPICAL SECTIONS AND RELATED DETAILS 5-3

SECTION 6 - COMPUTER DESIGN SOFTWARE

6.1 GENERAL INFORMATION 6-1
6.2 HYDRAULIC PROGRAMS 6-1
6.3 ACCOUNTABILITY 6-1

SECTION 7 - SHOP DRAWINGS

7.1 INTRODUCTION 7-1
7.2 REQUIRED INFORMATION 7-1

7.2.1 General 7-1
7.2.2 Structural Steel 7-2
7.2.3 Prestressed Concrete 7-2
7.2.4 Timber 7-3
7.2.5 Other Items Subject to Approval 7-3
7.3 APPROVAL PROCEDURES 7-4
7.3.1 Prior to Approval 7-4
7.3.2 Approval 7-4
7.3.3 After Approval 7-4
7.4 CONTRACT PLAN REVISIONS 7-5

APPENDIX A

A.1 MANDATORY PLAN NOTES A-1
A.1.1 Weathering (Unpainted) Steel Bridges A-1
A.1.2 Deck Removal A-4
A.1.3 Steel Stud Shear Connectors A-5
A.2 TYPICAL PLAN NOTES A-5
A.2.1 Elastomeric Bearing with Load Plate A-5
A.2.2 Strip Seals A-5
A.2.3 Finger Joints A-5.1
A.2.4 Retaining Walls A-6
A.2.5 Deck Slab Overhang Form A-7
A.2.6 Erection Requirements A-7
A.2.7 Lead Based Paint Coating A-7
A.2.8 Asbestos A-7

APPENDIX B

B.1 GENERAL B-1
B.2 US ARMY, CORPS OF ENGINEERS B-1
B.2.1 Nationwide Permits B-1
B.2.2 Individual Permits B-1
B.3 US COAST GUARD B-2

APPENDIX C

C.1 BRIDGE SAFE LOAD CAPACITY – ANALYSIS AND JUSTIFICATION REPORT (FORM DS-25) C-1
C.2 STRUCTURE INVENTORY AND APPRAISAL (FORM DS-21) C-5
C.3 SCOUR EVALUATION SUMMARY (FORM DS-34) C-17

APPENDIX D

D.1 STEEL COATINGS D-1
D.1.1 General D-1
D.1.2 Coating New Structures D-1
D.1.2.1 Types of Coatings Available D-1
D.1.2.1.1 Weathering Steel Uncoated D-1
D.1.2.1.2 Galvanizing D-2
D.1.2.1.3 Metalizing (Thermal Spray Applied) D-2
D.1.2.1.4 Zinc-Rich Primer without Topcoats (711.20) (Section 688.2.9 of the Standard Specifications) D-2
D.1.2.1.5 Zinc-Rich Primer with Topcoats (711.6, 711.20 and 711.22) D-3
D.1.2.2 Items for Consideration by the Designer D-3
D.1.3 Coating Existing Structures D-4
D.1.3.1 Strategy D-4
D.1.3.2 Interpretation of Coating Condition Data D-9
D.1.3.3 Guide 6: Guide for Containing Debris Generated During Paint Removal Operations D-10
D.1.3.3.1 Removal of Coatings Containing Lead and Other Toxic Metals D-10
D.1.3.3.2 Containment System Classes D-12
D.1.3.3.3 Methods of Assessing the Quantity of Emissions D-13
D.1.3.4 General Comments D-14
D.2 CONCRETE COATINGS D-15

APPENDIX E

REFERENCES E-1

GLOSSARY

GLOSSARY 1

INDEX

INDEX 35

SECTION 1 - INTRODUCTION

1.1 POLICY

1.1.1 Scope

This Bridge Design Manual will serve as a guide to the Designer in order to provide consistency in bridge designs throughout the state and to aid new designers and consultants on the policy, standards, and preferences of the West Virginia Division of Highways (WVDOH). The *AASHTO* (American Association of State Highway and Transportation Officials) *LRFD* (Load and Resistance Factor Design) *Bridge Design Specifications* will continue to be the basis for all highway bridges designed for the WVDOH. It is essential that designers maintain the needed flexibility to promote economical and creative designs. Therefore, exceptions based on sound engineering and practicality of construction will be evaluated. The benefits of this Manual will be the standardization of: the structure design process, common details, and the layout of the contract plans. In addition, it will provide minimum design standards for structures in West Virginia and provide interpretation and consistency in the application of the AASHTO Specifications. Finally, this Manual will replace the system of Structural Directives by incorporating them into the various sections of this manual. This manual may be found on the WVDOH's Engineering Publications and Manuals website at http://www.wvdot.com/engineering/TOC_engineering.htm.

Any questions, comments or suggestions are welcomed and should be addressed to:

Director, Engineering Division
West Virginia Division of Highways
1900 Kanawha Blvd., East
Building 5, Room 317
Charleston, West Virginia 25305-0430
www.wvdot.com

1.1.2 Limitations

Due to the nature of this manual, it is not intended to be a design specification, providing all the information necessary to design a bridge or other structure in West Virginia. Rather, it is intended that this manual will: standardize the design process, provide information on required contents of contract drawings, and provide typical details. Even though this Manual was developed as a guide, it is expected that deviations to this Manual, the AASHTO Specifications and the WVDOH Design Directives (DD) be properly documented and submitted to the WVDOH Project Manager prior to proceeding with the plan development.

The Bridge Designer should always determine at the beginning of the project who is responsible for the project management. It may be the Engineering Division, District Offices, Maintenance Division, Materials Division or many others. The WVDOH directory can be found on the web at www.wvdot.com/3_roadways/3d_doh.htm.

SECTION 2 - BRIDGE DEVELOPMENT PROCESS

2.1 PROJECT DESIGN CRITERIA

All designs shall be in accordance with the latest edition of the *AASHTO LRFD Bridge Design Specifications* (Governing Specifications), including all interim specifications and the *West Virginia Division of Highways Standard Specifications, Road and Bridges* (Standard Specifications) including the latest supplemental specifications.

See Section 600 of the Design Directives (DD) for information that is applicable to the roadway design criteria associated with bridge planning. Reference is also made to DD-202, which contains the Bridge Submission Checklists for each phase of the project.

When a project consists of total Bridge Replacement or a Bridge Rehabilitation Project is converted to a Bridge Replacement, the Project Manager shall verify that the Bridge Sufficiency Rating is less than 50 if Federal Funding is being utilized.

2.1.1 Typical Deck Transverse Section

The typical deck transverse section shall be determined by the Project Manager (see DD-601).

Generally, the bridge width shall not be less than that of the approach roadway section and barriers shall be provided in accordance with the Governing Specifications.

2.1.2 Environmental Documentation

The WVDOH and/or Consulting Engineer will perform environmental evaluations. These documents will be supplied to the Project Manager for use in the design. Design Directives 201 and 206 discuss the environmental process and the necessary documentation.

Under most circumstances, bridge rehabilitations, reconstruction, and replacement projects will require a Class II (categorical exclusion) environmental action as defined in 23 CFR Section 711.117 (Code of Federal Regulations, U. S. Congress). Those structures requiring a Class I or Class III (Environmental Impact Statement or Environmental Assessment, respectively) environmental action are generally on a new alignment and will be part of a larger corridor study.

When requested by the Division of Highways, representatives from the WVDOH and/or the Consulting Engineer shall attend public information meetings to answer questions and provide information about the environmental study.

2.1.3 Right-of-Way

Right-of-way requirements shall be coordinated with the Right-of-Way Division of the Division of Highways (see DD-301).

2.1.4 Line and Grade Geometrics

The WVDOH will determine the line and grade on a project. If a Consultant is designing the project, then the line and grade will be determined by the Consultant, pending approval from the Project Manager. See DD-601 through 620.

2.1.5 Highway Drainage

See Design Directives Section 500 for information dealing with highway drainage.

The Governing Specifications requirements for hydraulic studies shall be met. The depth of the study is dependent on the classification of the highway.

2.1.6 Existing Project Related Information

Early in the project, the Bridge Designer should gather as much existing information about the project as possible. This information could prove to be extremely useful during the planning phase of the project. Available information could consist of inspection reports, bridge replacement studies, as-built plans on the existing bridge and roadway, among other items.

2.1.7 Hydrology and Hydraulics

The WVDOH has developed a comprehensive Drainage Manual that shall be utilized in establishing design frequencies for new and replacement structures.

Hydraulics is the study of stream valley cross-sections and bridge geometry data to determine flow velocities and water surface elevations along a stream or river. In most cases, a one-dimensional steady flow model will suffice. The HEC-RAS computer model (Hydrologic Engineering Center – River Analysis System) can be used to determine the flow velocities and water surface profile. When a more detailed or site-specific analysis is needed, unsteady flow and/or two-dimensional models may be used.

When determining water surface elevations, two conditions must be analyzed for comparison: the existing conditions and the proposed conditions. If there is published

data or a published study for the stream, from Federal Emergency Management Agency (FEMA) or another agency, then that data or study shall be obtained and appropriately considered in the analysis. Where a FEMA regulatory floodway has been established, the Designer's model (preferably based on the original study) shall match published water surface elevations for the 100-year event, with no increase in the water surface elevation.

The proposed water surface elevation must be submitted to the local Flood Plain Coordinator. A Conditional Letter of Map Revision (CLOMR) and/or a Letter of Map Revision (LOMR) may be required when the water surface elevation will be increased by the proposed bridge or at the request of the Flood Plain Coordinator.

See WVDOH Drainage Manual for additional information.

A scour analysis shall be performed on all waterway or stream/river crossings and a DS-34 Form submitted (see Appendix C).

2.2 BRIDGE LAYOUT CRITERIA

2.2.1 Geometric Guidelines

The following are guidelines in the geometric layout of new or replacement structures:

- The desirable berm width in front of an abutment shall be as follows (see Figure 2.2.1A):
  - A minimum berm width of 3 FT shall be used under dry conditions.
  - For wet conditions, a berm width of 5 FT is preferred.
  - When very steep terrain is encountered, a berm width of 10 FT is desirable to facilitate safe construction practices.
- The berm should be at an elevation below the bridge seat that will allow access to the bridge seat for future maintenance (see Figure 2.2.1B).
  - A minimum 1.5 FT clearance between the berm and superstructure is required. However, if the berm width is greater than 10 FT a minimum 3 FT clearance should be used to provide clearance for ventilation, vegetation and access.
  - Where conditions warrant (e.g., steep terrain or where additional construction clearance is required) a 3 FT minimum clearance is preferred.
- The maximum desirable skew is 30°; however, elimination of skew is preferable.

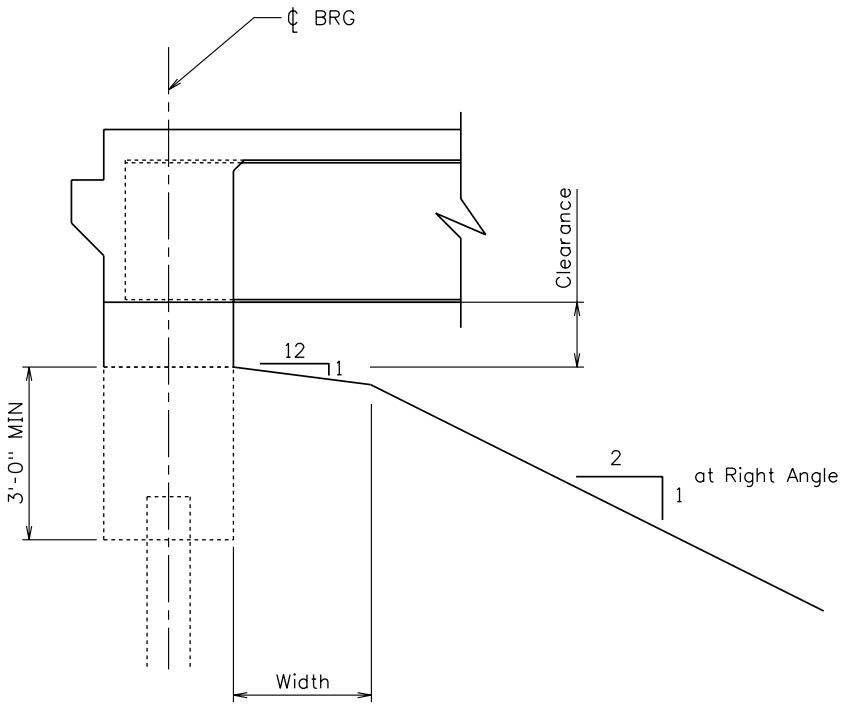

BERM LAYOUT SECTION

Figure 2.2.1A

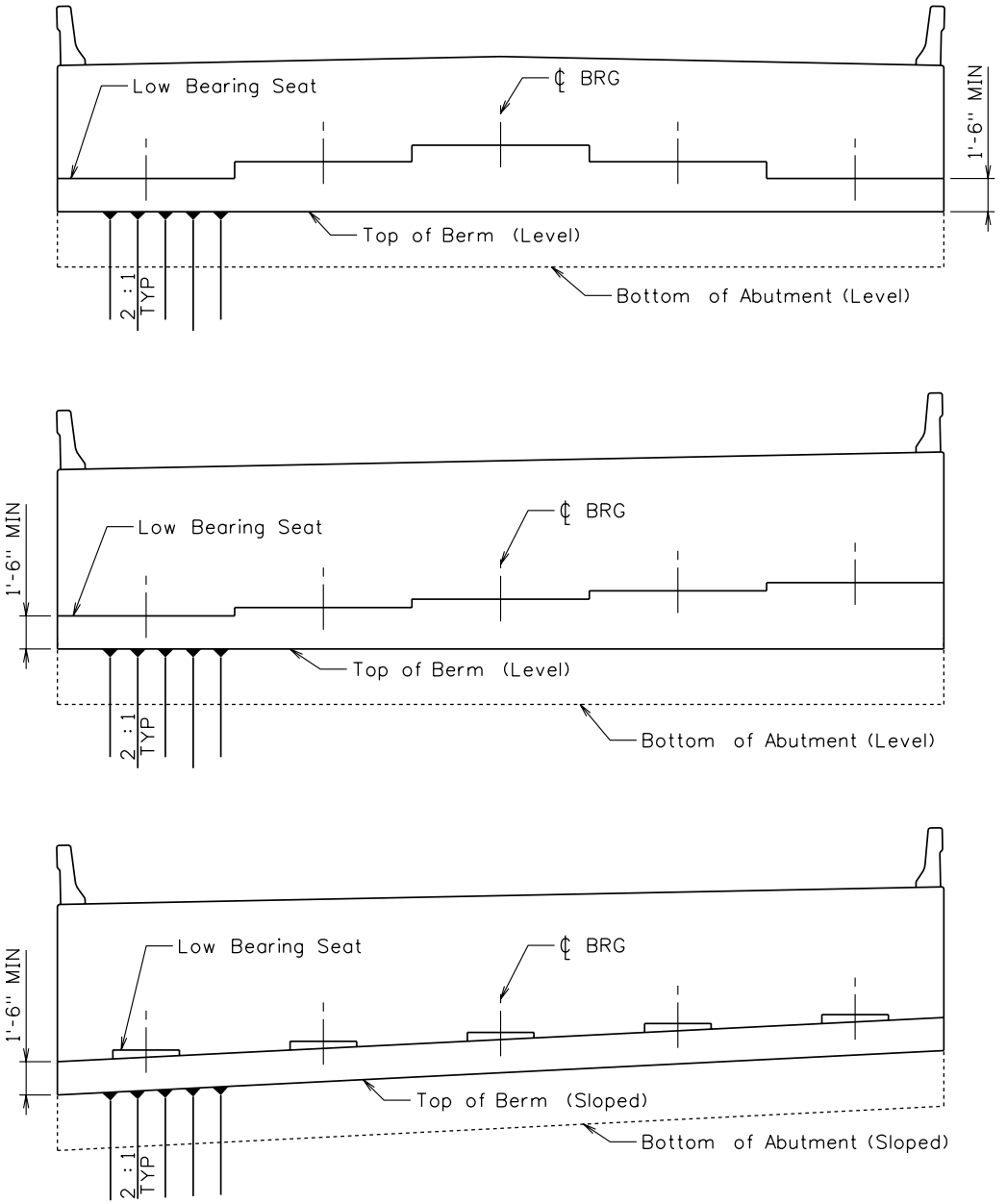

BERM LAYOUT ELEVATION

Figure 2.2.1B

- The maximum skew for the ends of box beams is 30°. When the bridge is skewed greater than 30°, additional bridge seat width may be required along with a stepped backwall to compensate for the difference in skew angles.
- Substructure units that are either parallel to one another or radial to the roadway curvature are desirable. The number of substructure units is determined by cost comparisons of various span arrangements and the topography of the site.
- All horizontal and vertical clearances for roadways, railroads, navigable waterways or any adjacent features, that require a clear zone, shall be maintained. If they cannot be maintained, appropriate measures shall be taken to protect the public and the structure.
- The Bridge Designer shall consider the location of environmental features during the bridge layout phase.
- The maximum side slope of embankments is generally 2:1. Flatter slopes may be warranted by the existing topography, aesthetics, or slope stability concerns. However, steeper slopes up to 1 ½:1 may be utilized if soil/rock conditions permit and a geotechnical analysis is performed.

2.2.2 Bridge Length

The length of the bridge is determined by the attributes that they cross, such as streams, highways, railroads, and cultural and natural resources.

2.2.2.1 Stream Crossings

The necessary waterway opening is determined by hydraulic design based on approved software such as HEC-RAS. The design discharge, expected water surface elevation and scour risks must be calculated before the bridge length can be estimated. Freeboard, the clear distance above the design discharge elevation and the lowest portion of the superstructure, ideally is 2 FT, with assurance that the bridge bearings are above the design discharge elevation. The structure depth is a function of the span length, which is not yet finalized. For the assumed bridge configuration, a superstructure depth must be estimated to perform the hydraulic analysis. The final bridge grade may require adjustment if the estimated structure depth is significantly different from that of the original estimate.

The embankment toe location is used to determine the bridge length and shall be chosen to provide the proper discharge opening. The Designer should refer to the *WVDOH Drainage Manual* for further guidance.

The Designer should avoid a span arrangement that places a pier in or near the center of the stream. It is preferable for pier columns to be located outside the normal flow.

2.2.2.2 Highway Crossings

Bridge layouts for highway crossings are usually controlled by the cross section of the roadway below. Minimum vertical underclearances, horizontal safety clearances and adequate sight distances will frequently control not only the overall length of the bridge, but the span arrangement as well.

Relatively extreme gradients at either roadway grade require careful consideration of the vertical clearances. The point of minimum underclearance can be beneath any of the superstructure members at any point in the traveled way below. The superelevation rates for both alignments must be evaluated throughout the layout process. The Designer should consider the effects of future widening and the final grade shall provide the minimum vertical clearance.

When possible, obstructions (abutments, piers, etc.) should be placed outside of the clear zone. If an obstruction is within the clear zone, appropriate safety measures shall be incorporated, such as (but not limited to), guardrails, crashwalls, etc.

Table 2.2.2.2 shows horizontal and vertical clearances for highway crossings. For additional information, see DD-601.

2.2.2.3 Railroad Crossings

The two principle railroads currently operating in West Virginia are the Norfolk Southern Corporation (NS) and CSX Transportation, Inc. The proposed bridge length is determined from the embankment slopes and berm requirements similar to those for highway crossings. See Section 2.10 for clearance and additional railroad requirements.

2.2.2.4 Cultural and Natural Resources Crossings

The Designer should avoid any cultural and/or natural resources in the project area. The Designer must receive permission from the Director of Engineering Division when these areas cannot be avoided, prior to the advancement of the bridge layout.

2.3 GEOTECHNICAL INVESTIGATIONS

2.3.1 Introduction

The purpose of this information is to provide Design Engineers a guide to the proper procedures in the performance of geotechnical investigations. Specifically, this section is

Horizontal and Vertical Clearances for Highway Crossings		
Classification*	**Horizontal Clearance to Obstructions**	**Minimum Vertical Clearance**
Local Roads	10 FT from edge of traveled way.	14.5 FT over the entire roadway. This value includes a 6 IN future resurfacing allowance for new structures.
Rural Collectors	Design speeds of 40 MPH and below - 10 FT from edge of pavement. Design speeds of 50 MPH and above - see the current edition of the AASHTO Roadside Design Guide.	14.5 FT over the entire roadway. This value includes a 6 IN future resurfacing allowance for new structures.
Two-Lane Arterial	See the current edition of the AASHTO Roadside Design Guide	16.5 FT over the entire roadway and usable shoulder. This value includes a 6 IN future resurfacing allowance for new structures.
Divided Arterial	See the current edition of the AASHTO Roadside Design Guide.	16.5 FT over the entire roadway and usable shoulder. This value includes a 6 IN future resurfacing allowance for new structures.
Freeway	See the current edition of the AASHTO Roadside Design Guide.	16.5 FT over the entire roadway and usable shoulder. This value includes a 6 IN future resurfacing allowance for new structures. A minimum of 17.5 FT should be provided to pedestrian overpasses, sign trusses, and from the bridge deck to cross bracing on through trusses.

* The AASHTO functional classification system is to be used as a design type of highway for design purposes.

Table 2.2.2.2

intended to define the procedures that may be involved in performing a subsurface investigation and the various geotechnical aspects of the design and construction of roadways and roadway structures. For the purpose of preliminary foundation design, existing geotechnical data or presumptive values found in the Governing Specifications may be used at the service limit state. All foundations, including pile foundations, must be designed in accordance with the Governing Specifications.

Each project presents unique considerations and requires engineering judgment based on a thorough knowledge of the individual situation. This section is not intended to serve as the geotechnical scope of services for individual projects. The scope of services dictates the specific practices, which are to be used on a particular project. Additionally, the

scope defines the required interaction between the Design Engineer and those performing the geotechnical work.

Details of coring requirements shall be contained in the Core Boring Contract Documents in the Span Arrangement Report. Core Boring Contract Documents are available from the Engineering Division. Determination of soil properties shall be in accordance with the Governing Specifications.

2.3.2 Structure Boring Requirements

The purpose of structure borings is to provide sufficient information about the subsurface materials to permit proper design and construction of the structure foundations. All structure borings shall include Standard Penetration Testing (SPT) at regular intervals unless other sampling methods and/or in-situ testing are being performed. It is the Engineer's responsibility to assure that appropriate explorations are carried out for each specific project. The following general criteria should satisfy this purpose on most projects.

2.3.2.1 Bridges

In most cases, two borings shall be obtained at each substructure unit. However, one boring may be adequate for smaller structures, with the approval of the Bridge Project Manager. The hole pattern should be staggered so that borings occur at the opposite ends of adjacent piers. Pier foundations or abutments may require at least two borings, preferably at the extremities of the proposed substructure. For structure widening, the total number of borings may be reduced depending on the information available for the existing structure. Additional borings to define general site conditions may be needed. General site conditions will include construction and post construction effects on: slope stability of stream banks, adjacent natural hillsides, adjacent cut slopes, approach embankments, erosion and scour potential, and any other bridge related considerations requiring subsurface information. Unanticipated findings may require supplemental borings.

If pier locations are unknown, their approximate locations may be deduced based on experience and a preliminary design concept for the structure. Generally, place borings at no more than 100 FT intervals along the alignment if this is not possible. Additionally, for projects with a pier in water, at least one boring should be located in the water when practical, depending on the width of the crossing.

Continue the borings until all unsuitable foundation materials have been penetrated and the predicted stress from the foundation loading is less than 10% of the original overburden pressure, or until a minimum of 10 FT of competent rock has been penetrated. If no data is available for predicting the foundation stress, extend the boring

until at least 20 FT of bedrock or other competent bearing material (n – values of 50 or greater) is encountered. Scour and lateral requirements must be taken into account.

When using the Standard Penetration Test, split-spoon samples shall be obtained at a maximum interval of 2.5 to 3 FT and at the top of each stratum. Continuous SPT sampling in accordance with ASTM D 1586 is recommended in the top 15 to 20 FT unless the material is obviously unacceptable as a founding material.

When cohesive soils are encountered, undisturbed samples shall be obtained at 5 FT intervals in at least one boring. Undisturbed samples shall be obtained from more than one boring where possible.

When rock is encountered, successive core runs shall be made with the objective of obtaining the best possible core recovery. SPT's shall be performed between core runs, typically at 5 FT intervals.

In-situ vane, pressure-meter, or dilatometer tests are recommended where soft clays are encountered.

Corrosion tests are required on all new bridge projects. As a minimum, one on the soil and one on the water shall be done.

When drilling for a bridge over a stream, samples of streambed materials and each underlying stratum shall be obtained for determination of the median particle diameter, D50, needed for scour analysis. The RQD should also be determined for each rock layer for use in determining limits of rock scour.

For projects where the potential for large ship impacts exists, the pressure meter test is recommended to be performed within seven foundation element diameters below the deepest scour elevation at the pier location.

The type of foundation selected for a substructure unit shall be based on the findings from the core borings obtained.

2.3.2.2 Approach Embankments

At least one boring shall be taken at the point of highest fill; usually the borings taken for the bridge abutment will satisfy this purpose. If settlement or stability problems are anticipated, as may occur due to the height of the proposed embankment and/or the presence of poor foundation soils, additional borings shall be taken along the alignment. The first of these borings shall be no more than 15 FT from the abutment. Extend borings below any unsuitable founding material.

Sampling and in-situ testing criteria are the same as for bridges.

2.3.2.3 Retaining Walls and Miscellaneous Structures

The maximum interval between borings is 100 FT, as close to the structure's foundation as possible. Borings shall be extended below the bottom of the foundation at least 10 FT into competent material. This applies to proprietary systems as well as precast and cast-in-place wall sections. Sampling and in-situ testing criteria are the same as for bridges.

2.3.3 Geotechnical Tasks

This section is designed to present information in the same sequence, as it would occur during project development. A general outline of the tasks that should be performed by a Design Engineer during a project is discussed. Methods of subsurface investigation, analyzing data and solving problems are not discussed in detail.

2.3.3.1 Planning, Development, and Engineering Phase

- Prepare geotechnical scope of services for consultant projects
- Review existing information
- Perform field reconnaissance of site and existing structures
- Plan and supervise field investigation program, field and laboratory testing.
- Analyze all data available
- Prepare preliminary geotechnical report summarizing available data and provide recommendations
- Identify potential construction requirements and problems (predrilling requirements, vibration and sound impacts)

2.3.3.2 Project Design Phase

- Perform additional field investigations and provide additional or revised recommendations if called for in the geotechnical report or if the project has substantially changed since earlier investigations.
- Design and, if applicable, perform load test programs or special instrumentation monitoring as deemed necessary.
- Review plans, special provisions and/or supplemental specifications for compliance with the geotechnical report.
- Perform constructability review with respect to geotechnical activities. Identify potential construction conflicts and recommend changes to minimize potential construction problems and claims. Determine if specialized construction techniques are necessary such as pre-drilling. Consider other impacts such as vibration and sound levels, etc.

2.3.3.3 Construction Phase

- Establish construction criteria for geotechnical portions of project
- Inspect construction procedures to assure compliance with design and specifications
- Assist in design, installation, performance, monitoring, and evaluation of load test programs and/or instrumentation systems
- Assist in solution of unforeseen foundation and/or roadway geotechnical problems

2.3.3.4 Post-Construction Phase

- Assist in assessment of, and provide solutions to, roadway and structure maintenance problems, which are related to the geotechnical characteristics of the site
- Summarize construction procedures and/or problems and any changes in design made during construction
- Provide information to the Geotechnical Department for reference during the design of future projects

2.4 STRUCTURAL SYSTEM SELECTION

The WVDOH encourages diversity in studying a wide range of bridge systems for each project. However, the number and complexity of the systems studied will vary for each specific site. A bridge structural system consists of a superstructure and substructure.

All feasible superstructure types must be considered in the preliminary phases of the project. Haul lengths and weight limits should be verified by the Designer by contacting suppliers in the area. Prior to the submission of the Span Arrangement, the Designer shall meet with the Bridge Project Manager to discuss the span arrangement alternatives that will be included in the submission. In the case of a bridge design by a consultant, this meeting is referred to as the Pre-Span Arrangement meeting. At this meeting, the Designer and the Bridge Project Manager will make decisions on what superstructure, abutment, pier types and span arrangements should be studied in the span arrangement phase of the project. The following sections discuss some of the steel and concrete superstructure types that are used by the WVDOH. All structures studied shall accommodate their anticipated movements. In this regard, jointless bridges are to be used whenever possible. However, for very long structures, the Bridge Designer shall minimize the number of intermediate expansion joints.

The substructure consists of abutments and piers founded on various types of foundations. Common abutment and pier types along with foundation types are also described later in this section.

2.4.1 Steel Superstructure Types

Steel superstructures should be considered for any span length ranging from 20 to 650 FT or more. Generally, the following table (Table 2.4.1) can be used as a guideline for selecting steel superstructure types.

SPAN LENGTH (FT)	SUPERSTRUCTURE TYPE
20 to 100	Rolled Beams
60 to 130	Rolled Beams with Cover Plates
80 to 400	Welded Plate Girders
200 to 400	Box Girders
400 to 900	Truss
500+	Cable Stayed
650+	Tied Arch

Table 2.4.1

The superstructure should be designed such that the structure has redundant load paths and is not considered fracture critical. Some designs, especially truss and tied arch designs, are generally, by their very nature, fracture critical. As defined in the Governing Specifications, a fracture critical member (FCM) or member component is a "*component in tension whose failure is expected to result in the collapse of the bridge or the inability of the bridge to perform its function.*" The Designer is to declare at Span Arrangement or TS&L if the structure is fracture critical. Fracture critical design must be approved by the Director of Engineering Division. Design calculations, welding procedures, and material specifications can be incorporated into the project to make the use of these superstructure types acceptable.

Unpainted weathering steel in bridge construction has been shown to be a cost effective choice when the site conditions are appropriate for its use. The cost savings associated with the use of weathering steel is realized both in initial construction and in long-term maintenance of the structure. Unpainted weathering steel will be used for construction whenever appropriate. For a more detailed discussion, see Section 3.3.9.

High performance steel should also be considered when determining viable superstructure alternatives. It has been found to not only provide cost savings but also increase the serviceability of a structure. For a more detailed discussion, see the WVDOH's policy on high performance steel, Section 3.3.1.2.

Painted steel may be used where the use of weathering steel is not permitted. These locations include:

- Wet environments
- Industrial areas where concentrated chemical fumes may drift directly onto the structure
- Grade separations resulting in "tunnel-like" conditions
- Low level water crossings
- Other locations as determined by the Bridge Project Manager

The following section discusses the various types of steel superstructure types and guidelines for when to consider them.

2.4.1.1 Rolled Beams

Rolled beams should be considered for any span length ranging from 20 to 100 FT. With cover plates, the span range of rolled beams can be extended to 130 FT. However, only end bolted cover plates shall be used (see Figure 2.4.1.1). The Designer shall determine the availability of any rolled section considered, including lengths and grade of steel.

The Designer should minimize the number of beam lines. Rolled beam bridges should have a minimum of three stringer lines.

Continuous spans shall be used for multi-span bridges. The ratio of the length of the end spans to the intermediate spans should preferably be 0.75.

2.4.1.2 Plate Girders

Plate girders should be considered for any span length ranging from 80 to 400 FT. The Designer shall carefully evaluate the bridge cross section to ensure appropriate girder spacing. Substantial cost savings may be realized early in the design process. The following shall be considered during the span arrangement study:

- Use of wider girder spacing to eliminate one girder line, in some cases, may increase the total weight of the steel. However, the savings realized through fabrication of one less girder, fewer cross frames and bearings, as well as savings realized through shorter erection time will often offset an increase in raw steel cost. Three girder lines is the minimum unless the system is structurally redundant and not fracture critical.
- Consultation with fabricators and erectors is recommended to assess the fabrication and erection costs of the girders.

Generally, continuous spans shall be used for multi-span bridges. The ratio of the length of the end spans to the intermediate spans should preferably be 0.75. If the end span to

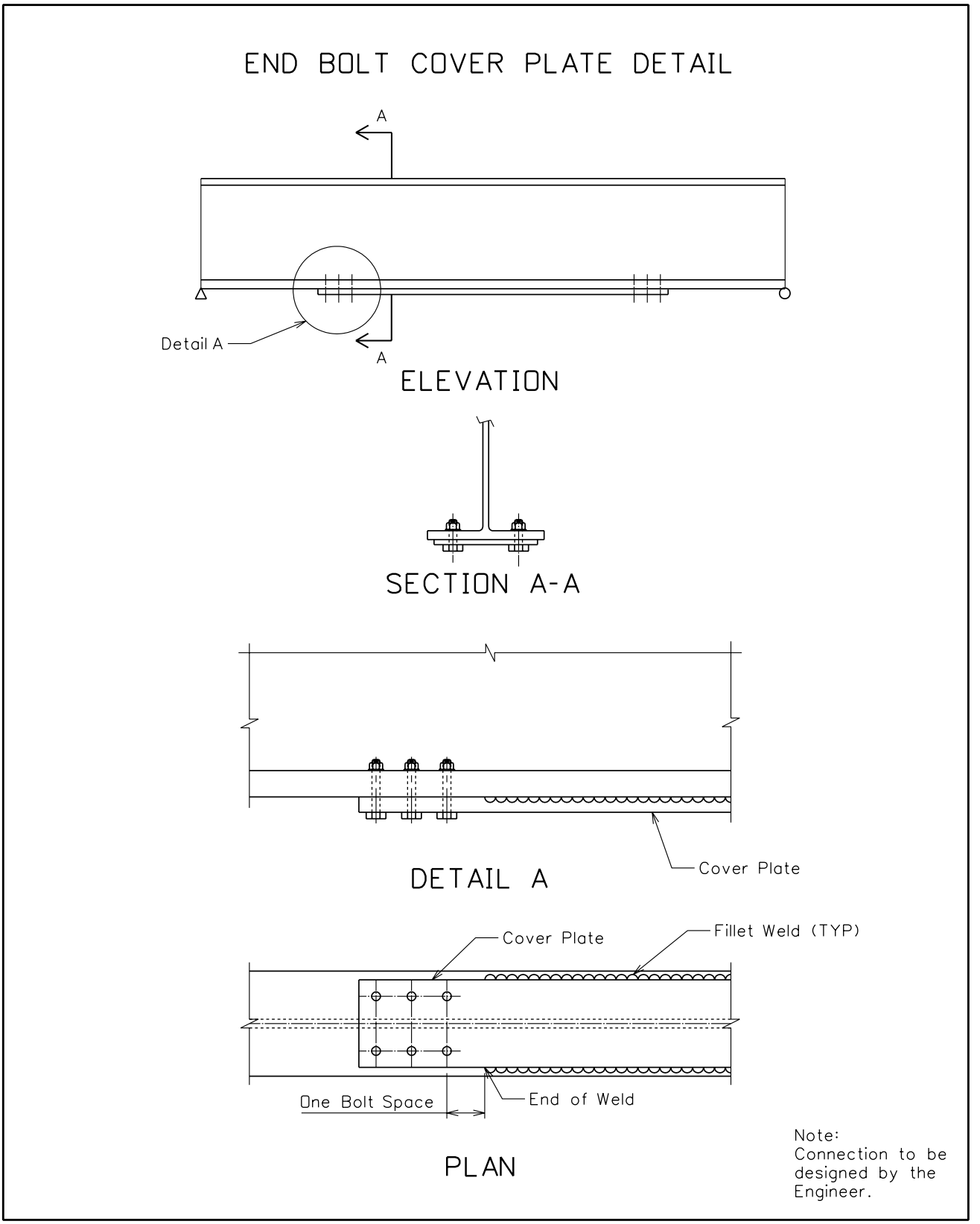
END BOLT COVER PLATE DETAIL
A
Detail A
A
ELEVATION
SECTION A-A
Cover Plate
DETAIL A
Cover Plate
Fillet Weld (TYP)
One Bolt Space
End of Weld
PLAN
Note:
Connection to be designed by the Engineer.

Figure 2.4.1.1

intermediate span ratio is small, anchored end spans shall be considered to eliminate any uplift problems at the abutments. The Bridge Designer should also consider the economics of a system designed span by span (i.e., simply supported for dead load and continuous for live load).

Detailing interior and exterior girders the same is often desirable for curved bridges with three to five girder lines and for most tangent bridges. Therefore, when designing tangent bridges, consider "balancing" the total factored design moment for interior and exterior girders to yield similar performance. Balancing factored design moments is accomplished by adjustment of girder spacing and overhang dimensions. This type of study may be efficiently performed using simple line girder analyses. For curved structures with five or more girders, consider grouping the girders into two similar designs, one for girders interior of the centerline of the bridge and one for girders exterior to the centerline of the bridge. Consult with fabricators to ascertain the least cost approach.

Limit girder spacing to 15 FT for typical girder structures. For girder/sub-stringer framing arrangements, the main girders may be efficiently spaced at 20 to 22 FT. Large girder spacings may cause an increase in the structural thickness of the deck slab. Therefore, evaluation of larger girder spacings must be accompanied by an evaluation and cost analysis of the deck slab. Steel fabrication and erection savings may be partially offset by an increase in deck cost.

Optimize the girder weight by investigating various web depths.

The minimum web thickness for plate girders is $^{7}/_{16}$ IN. Increment the web thickness by a minimum of $^{1}/_{16}$ IN. It is generally more economical to maintain a constant web thickness throughout a project. However, the web thickness may be varied at field splices, or less desirable, at shop splices. The Designer shall consult with a steel fabricator to determine the most economical location of a splice, and whether or not the added cost of additional web thickness will be offset by changing the web thickness.

2.4.1.3 Box Girders

Steel box girders can be considered as an alternate for steel plate girders for span length ranging from 200 to 400 FT.

A box girder has two or more vertical or inclined webs, a continuous bottom flange plate connecting the webs, and narrow top flange plates on each web. The box girder cross-section having a hollow rectangular or trapezoidal section is a suitable candidate in an urban setting where aesthetics play an important role in bridge type selection. The closed section of a box girder has high torsional resistance, which makes them economical for curved bridges.

2.4.1.4 Trusses

Trusses can be used for bridges over navigable river crossings with spans from 400 to 900 FT. The main structural elements of a typical bridge truss consist of stringers, floor beams, top chord, bottom chord, vertical and diagonal members of the main longitudinal trusses, lateral bracings and sway bracings. Chord members carry the bending moment while the diagonals carry the shear. Axial loads are the predominant forces in all truss members.

Based on aesthetics and the object of reducing the total truss weight, it is preferable to use a curved chord truss rather than a truss with parallel chords. Truss bridges can be designed as simple or continuous spans. Simple span trusses for multi span bridges are recommended only when problems due to excessive foundation settlement is anticipated. For a continuous truss bridge with three or more spans, a common method of construction utilizing cantilevered end spans that support the central suspended span can be used.

The stringers can be designed similar to steel rolled beam bridge members. The floor beams are generally plate girders with variable plate sizes. Generally, the truss members are composite box sections made of welded plates and the bracing members are rolled W, T or channel shapes. The use of high performance steel shall be investigated in the span arrangement study for main truss members, stringers, and floor beams.

2.4.1.5 Cable Stayed

Cable-stayed bridges are competitive for medium and long spans (500 to 1500 FT). The superstructure, consisting of a concrete deck on steel girders, is supported at several intermediate points by cables radiating from one or more towers. Generally, a cable-stayed bridge system consists of a three span structure with a long main span and two smaller end spans.

2.4.1.6 Tied Arch

Tied arch bridges can also be used for medium and long spans (650 to 1700 FT). A tied arch may also be used as a center span in conjunction with plate girder approach spans. The high horizontal reactions induced in large span arches are carried by the tie-grider, which is essentially a tension member connecting both ends of the arch itself. The rib of an arch bridge can be either a girder member or a truss.

2.4.2 Concrete Superstructure Types

Concrete superstructure types should be considered for any span length ranging from 20 to 650 FT or more. Generally, the following table (Table 2.4.2) can be used as a guide for selecting concrete superstructure types.

SPAN LENGTH (FT)	SUPERSTRUCTURE TYPE
up to 30	Slab Bridges
20 to 100	Box Beams
35 to 165	I - Girders
165 to 300	Post Tensioned I - Girders (Drop-In)
100 to 180	Segmental Concrete Boxes (Span-By-Span)
150 to 450	Segmental Concrete Boxes (Precast)
450 to 700	Segmental Concrete Boxes (Cast-In-Place)
500+	Cable Stayed

Table 2.4.2

The possible exceptions to the use of precast concrete beams are: structures with severe horizontal curvature, vertical curvature, limitations on structure depth, skew greater than acceptable limits, and restrictions on transportation.

Concrete compressive strengths for commonly used precast beams shall be no more than 6000 PSI at release (f'_{ci}) with a final compressive strength of 8000 PSI (f'_c).

High strength concrete (HSC) should also be considered when determining possible concrete superstructure alternatives. Precast beams may be designed using high strength concrete with a final compressive strength of up to 10000 PSI and a release strength of up to 9000 PSI with approval of the Director of the Engineering Division. HSC allows engineers to: design structures with smaller beams when clearance criteria needs to be met, reduce dead loads for more cost efficient substructures, and increase span lengths over conventional concrete.

The following sections discuss the various types of concrete superstructure types and guidelines for when to consider them.

2.4.2.1 Slab Bridges

This superstructure type consists of a reinforced concrete slab with the main reinforcing parallel to the direction of traffic. This type of structure may be economical for very short span bridges, generally less than 30 FT in length.

2.4.2.2 Box Beams

For short span bridges of 100 FT or less, prestressed concrete box beams may be considered an economical solution.

Three basic cross-sectional configurations are commonly used. They are:

- adjacent box beams with or without a hot-laid bituminous concrete (HLBC) wearing surface,
- adjacent box beams with a composite reinforced concrete deck, and
- spread box beams with a composite reinforced concrete deck.

Factors involved in the choice of box beam configuration design should include but are not limited to: economics, traffic type and volume, time constraints, and method of construction (whether by contract or state construction crews which generally have limited construction capabilities). The Bridge Designer should verify capabilities with the District prior to designing a structure that will be built with state forces.

2.4.2.3 Prestressed Concrete Beams

AASHTO Type I, II, III, IV or Type IV Modified prestressed concrete beams should be considered for bridges with spans from 25 to 145 FT. The maximum span length is based on the haul capacity for a particular project site and shall be verified with a prestressed concrete beam supplier familiar with the project location. For continuous spans, the bridge system shall be designed simply supported for dead load and continuous for live load and superimposed dead load only. The Designer should minimize the number of beam lines. Prestressed concrete beam bridges should have a minimum of three stringer lines.

The design of all structures that utilize prestressed concrete I-beam sections will be accomplished using one of the beam sections from Figure 2.4.2.3. AASHTO Type V and Type VI sections shall not be used unless approved by the Director of Engineering Division.

Alternate beam sections may be used for special design situations. Proposed sections, other than those shown in the following tables must also be approved by the Director of Engineering Division.

Prestressed concrete beams shall be spaced to optimize girder size and strand usage. Examples of beam types, spacings and span lengths are shown in Table 2.4.2.3.

WVDOT-DOH STANDARD PRESTRESSED CONCRETE I-BEAM SECTIONS

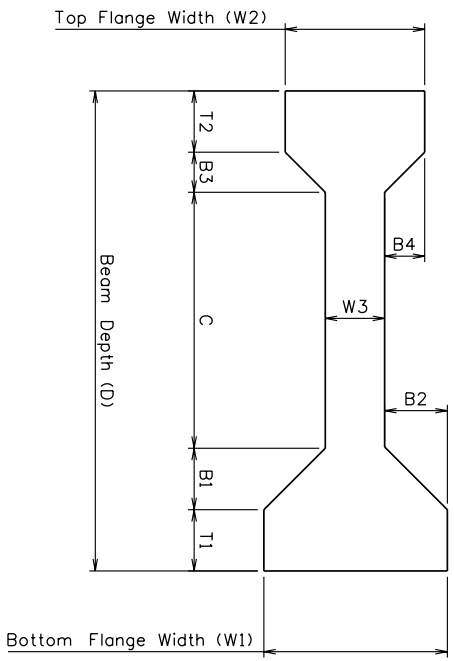

AASHTO I-BEAM
Typical-Type II, III & IV

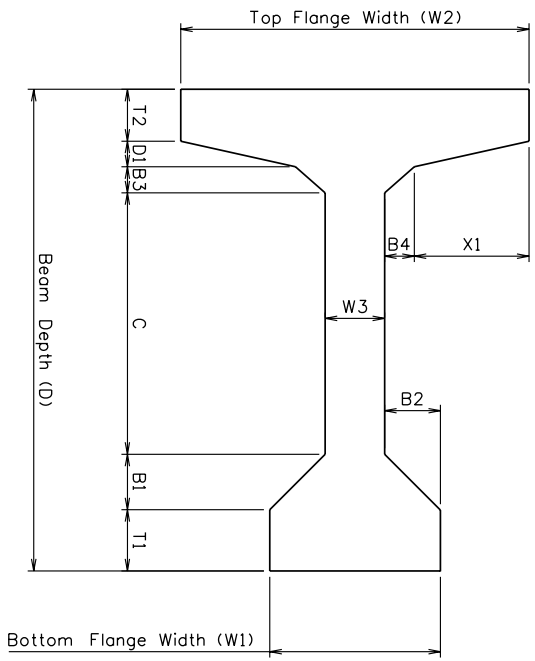

AASHTO I-BEAM
Typical-Type IV MOD, V* & VI*

Beam Designation	Top Flange Width (IN) W2	Bottom Flange Width (IN) WI	Depth (IN) D	Depth (IN)						Flange (IN)			Web Thickness (IN) W3	Basic Beam Properties		
				T2	D1	B3	C	B1	T1	X1	B4	B2		Area (IN^2)	Y_b (IN)	I_{xx} (IN^4)
II	12	18	36	6	-	3	15	6	6	-	3	6	6	369	15.8	50,980
III	16	22	45	7	-	4½	19	7½	7	-	4½	7½	7	560	20.3	125,390
IV	20	26	54	8	-	6	23	9	8	-	6	9	8	789	24.7	260,730
IV MOD	36	26	60	4	2	3	34	9	8	11	3	9	8	860	28.8	384,248
IV MOD	36	26	66	4	2	3	40	9	8	11	3	9	8	908	31.6	491,660
IV MOD	36	26	72	4	2	3	46	9	8	11	3	9	8	956	34.4	615,361
IV MOD	36	26	78	4	2	3	52	9	8	11	3	9	8	1,004	37.3	756,222
IV MOD	36	26	84	4	2	3	58	9	8	11	3	9	8	1,052	40.2	915,113
V*	42	28	63	5	3	4	33	10	8	13	4	10	8	1,013	31.9	521,180
VI*	42	28	72	5	3	4	42	10	8	13	4	10	8	1,085	36.4	733,320

* Use only when specifically approved by the Director of Engineering Division.

Figure 2.4.2.3

		Beam Spacing (FT)				
		14	**12**	**10**	**8**	**6**
AASHTO Type	**I**	25	30	35	40	45
	II	40	45	50	55	60
	III	60	65	70	75	85
	IV	75	85	90	95	105
	V	95	100	110	120	125
	VI	105	115	120	130	135
Type IV Modified	**60 IN**	85	95	100	110	120
	66 IN	95	100	110	120	125
	72 IN	100	110	120	125	135
	78 IN	110	115	125	130	140
	84 IN	115	125	130	135	145

Table of Approximate Maximum Span Lengths (FT)

NOTE: These values are approximate and should be used for preliminary design purposes only. These values shall not be used for final design. The designs were based on single span (simply supported) bridges with 32 IN Type F barriers, no sidewalks and utilizing concrete with a release strength (f'_{ci}) of 6000 PSI and a final strength (f'_c) of 8000 PSI.

Table 2.4.2.3

2.4.2.4 Post-Tensioned I-Beams (Drop-In)

Using post-tensioned drop-in spans can increase span lengths for prestressed concrete beams. The drop-in segments will be field spliced with pier segments and then the entire girder will be post-tensioned. At the field splice locations, temporary shoring towers or strongbacks may be required.

2.4.2.5 Segmental Concrete Boxes

Segmental concrete boxes are an economical solution for bridges with span lengths over 100 FT and where repetition of the box fabrication can be achieved. There are three methods of construction for segmental concrete: span-by-span, balanced cantilever, and cast-in-place. Each offers advantages in different situations.

2.4.2.6 Cable Stayed

Cable-stayed bridges are competitive for medium and long spans (500 to 1500 FT). The superstructure, consisting of a concrete deck on prestressed concrete beams, is supported at several intermediate points by cables radiating from one or more towers. Generally, a cable-stayed bridge system consists of a three span structure with a long main span and two smaller end spans.

2.4.3 Abutment Types

Abutments are structures positioned at the beginning and end of a bridge, which support the superstructure and approach roadway and retains the earth embankment.

Abutments can be classified into the following five types:

- Wall Type Abutment
- Pedestals
- Stub Abutment
- Integral Abutment
- Semi-Integral Abutment

2.4.3.1 Wall Abutment

This type of abutment, also known as a full height abutment, may be used when right-of-way is critical or the site does not permit a longer bridge with sloping embankments. Span lengths can be reduced using a wall type abutment. The footing may transfer loads by direct bearing (spread footing) or it may be supported on piles or drilled caissons.

The maximum exposed face should generally be 30 FT, measured from gutter line to ground line in the profile view. Taller heights may be permitted, with permission of the Bridge Project Manager, when the negative effects of a tall structure on the traveling public or aesthetics are not a governing factor. Otherwise, where walls greater than 30 FT are required, a stepped (terraced) wall configuration shall be used.

2.4.3.2 Pedestals

The beam seat is supported on columns/drilled caissons or pedestals resting on individual footings. This configuration is useful for meeting unique construction problems, e.g., widely varying elevations of competent rock.

2.4.3.3 Stub Abutment

Stub abutments are relatively short abutments that resemble wall type abutments. These abutments are generally placed on the approach embankment and are supported on rock, piles or drilled caissons.

2.4.3.4 Integral Abutment

Integral abutments are generally short abutments supported on a single row of piling. These abutments, like stub abutments, are generally placed on approach embankments and are well suited for bridges with limited thermal movements. The ends of the bridge beams are cast directly into the abutments, thereby eliminating the need for expansion devices.

This abutment type can be used in combination with MSE walls to provide the benefits of a wall type abutment while satisfying the preference for using jointless bridges.

See Section 3.9 for limitations on the use of integral abutments.

2.4.3.5 Semi-Integral Abutment

Semi-integral abutments can be either wall or stub type abutments. The difference between a semi-integral and an integral abutment is that for semi-integral abutments, the beams are cast in a closure diaphragm that is structurally independent from the stem. This type also eliminates the need for expansion devices.

See Section 3.9 for limitations on the use of semi-integral abutments.

2.4.3.6 Wingwalls

Wingwalls are walls on either side of an abutment used to retain the roadway embankment. Wingwalls can be constructed of cast-in-place concrete or MSE walls and shall be designed as retaining walls. They shall be sufficiently sized to prevent the roadway embankment from spilling onto the abutment seats or into the clear area under the bridge.

U-shaped or turned-back wingwalls are commonly used in embankment situations and straight wings are used in cut sections. Flared wingwalls between these extremes can also be appropriate based on site conditions. The Designer must study the existing and proposed surfaces to determine which type of wingwall best fits the site. Wingwalls with a tapered bottom surface shall be avoided due to compaction difficulties beneath the wall. The top surface of U-shaped wingwalls may be tapered parallel to the roadway slope to match the finished grade.

2.4.4 Pier Types

Piers are intermediate supports in a multi-span bridge system. All feasible pier types must be considered in the preliminary phases of the project.

2.4.4.1 Cap-and-Column Type Piers

Cap-and-column type piers have two or more circular or rectangular columns connected on top with a cap (a reinforced concrete beam that supports the superstructure). Generally, the pier cap ends will be cantilevered. For columns greater than 100 to 150 FT, the use of a compression strut at mid-height, similar to the pier cap, shall be investigated. The individual columns will be supported on an appropriate foundation.

2.4.4.2 T-Type or Hammerhead or Wall Type Piers

T-type or Hammerhead piers have a deep rectangular tapered beam carrying the superstructure supported on a single wide rectangular or oval column in the middle. For wall type piers, the width of the rectangular column will be very close to the length of the pier cap. The single column will be supported on an appropriate foundation. In some situations, the feasibility of using a single large circular column instead of a wide rectangular or oval column has to be investigated during the preliminary design phase of the project.

2.4.4.3 Post-Tensioned Concrete/Integral Pier Caps

To satisfy the vertical clearance requirement beneath a pier cap, a post-tensioned or integral pier cap shall be investigated.

2.4.4.4 Steel Pier Caps

Steel pier caps are fracture critical. If used, the design shall allow for reasonable access to the interior for future maintenance, inspection and repair.

2.4.5 Foundation Types

All feasible foundation types must be considered in the preliminary phases of the project. The WVDOH's policy is to found all new bridge foundations on competent rock.

2.4.5.1 Spread Footing

Spread footings have been found to be economical for depths to 20 FT. Spread footings are to be founded on competent rock unless an alternate founding material is approved by the WVDOH. Spread footings on rock fill or soil may be considered only if significant savings in cost and/or time can be achieved and if all other concerns are addressed. In situations where a cofferdam may be required for the construction of a spread footing, the cost of the cofferdam shall be included when comparing foundation options. Spread footing foundations shall be placed below the scour depth. Other concerns to consider include the stability of approach embankments, differential settlement, etc.

2.4.5.2 Piling

Piling must be designed for both axial and lateral loads as appropriate. Loads may include external (non-structure related) as well as structural loads. For example, pile foundations might be used to enhance stability of the approach embankment if the embankment factor of safety is questionable.

Piling to competent rock will normally be designed as end bearing and driven to refusal. Additional loading from negative skin friction (downdrag forces), resulting from embankment settlement, must be added to that from structural loads and any other external loads. Battered piles may be required to help resist lateral loads. The cost for pile tips, if necessary, shall be included in the cost estimate for the pile foundation.

With permission of the Bridge Project Manager, friction piles and end bearing piles on non-competent rock strata may be considered when site-specific conditions warrant and when all other concerns (such as settlement or scour) are addressed.

The minimum piling length shall be 10 FT. See Section 3.12.3 for further discussion.

For integral abutments, single-line piling systems shall be used.

Foundations supported on piling should be placed below the scour depth. When the bridge scour computations indicate that the steel piling may be exposed due to scour, then the piling cap placement must be designed in accordance with Section 3.12.3.

2.4.5.3 Drilled Caissons

Drilled caissons provide: superior scour protection versus traditional steel piling, greater resistance against high lateral and uplift loads, accommodation of site concerns

associated with the pile driving process (vibrations, interference due to battered piles, etc.), and in some cases exclude the need of cofferdams. In addition, drilled caissons may eliminate the need of caisson caps, for certain configurations such as single or multiple column piers.

The high cost of equipment mobilization should be considered for the installation of a limited number of drilled caissons. If integral abutments are utilized, the cost of mobilization may decrease with the equipment required to pre-drill the steel piling.

Construction techniques shall be in accordance with the Standard Specifications. These include, but are not limited to, pre-installation core holes, providing a test hole and crosshole sonic logging (CSL) testing. Higher project costs could arise from these testing methods for large projects.

Results from the CSL testing may show inadequate structural integrity and continuity. Further investigations such as core drilling for each of the unacceptable caissons would then be required, causing construction down time and added expenses.

2.5 ADDITIONAL DESIGN CONSIDERATIONS

2.5.1 Curved Bridges

Bridge Designers are cautioned to design curved structures for all relevant forces as specified in the Governing Specifications, even if the girders are straight and the deck is curved.

For moderately curved bridges, the use of straight steel girders or prestressed concrete beams with spacings satisfying the minimum and maximum deck overhang requirements shall be investigated.

Slab bridges, cast-in-place and precast segmental bridges are other options for curved concrete bridges.

2.5.2 Slope Stability

Instability of approach embankments has been a very costly problem. A stability analysis should be performed on approach embankments. Some concerns that may be addressed during this geotechnical analysis are:

- excess pore pressure during construction,
- ground water seepage during wet weather on hillsides on which the approach embankments are founded, and

- slides in natural hillside slopes that can change structures.

The hydraulic and scour effects on the stability of slopes adjacent to bridges are also a concern.

2.5.3 Aesthetics

The Bridge Designer shall determine and offer proposals of aesthetic treatment to the Bridge Project Manager in charge of the project.

General desirable traits include:

- uniform superstructure depth,
- homogenous girder material throughout the structure,
- symmetric span arrangements, and
- orientation of substructure units should be aesthetically consistent with the features they cross and the overall bridge layout.

For additional aesthetic requirements, see the Governing Specifications.

2.5.4 Approval of Vendor Supplied Products

All products designed and supplied by the Contractor or their Vendor shall be subject to approval of the Bridge Project Manager and the Materials, Control, Soils and Testing Division. These products include, but are not limited to: culverts, proprietary retaining walls, bearings, expansion devices, inspection walkways, stay-in-place forms and any prefabricated item used on a structure other than those specifically designed and detailed in the contract plans.

If the product is not specified in the Standard Specifications, the Designer is responsible for writing a Special Provision to describe the product and the criteria it has to meet. This shall include directions to the Contractor as to the necessary information to submit for approval by the Engineer. The following is a partial list of items the Designer is to provide the Vendor: all applicable loads, critical dimensions, design method to be used (LRFD) and any additional information that may be required for the product to be designed and detailed.

Vendor submissions should include items such as design calculations, design method, detailed drawings, construction sequence, induced loads, etc. and shall be stamped by an Engineer registered in West Virginia.

When a proprietary item is proposed, the Designer shall justify the benefits of the product and show that no other alternate exists. Proprietary items may also be warranted when a new technology or product is being evaluated. The use of the proprietary item shall then

be submitted for approval to the Bridge Project Manager. The Bridge Project Manager will then submit the request to the Deputy State Highway Engineer, Development, who will then forward it to the Federal Highway Administration (FHWA) for approval.

2.5.5 Protective Fencing

It shall be the policy of the WVDOH to evaluate the need for screening on bridges and overpasses when:

- a new structure is being designed,
- an existing structure is being renovated, and
- a pattern of accidents or public complaints indicates that there is a problem with objects or debris being thrown or dropped from an existing overpass or viaduct.

The intent of this section is to assist the designer in identifying those bridges where the probability of occurrence is high or where problems are known to exist and to assure that reasonable protective measures are taken at those locations. It will be the responsibility of the Bridge Designer to document the decision to, or not to install screening, the factors influencing the decision and the reasons for the type of screening chosen. This decision shall be included in the TS&L Report for review by the Bridge Project Manager.

Factors that shall be considered in the decision to install, or not to install, screening shall be as follows:

- Presence of a sidewalk.
- The proximity to a school, playground or neighborhood that may generate a significant number of children who may play on or around the structure. In addition to protecting those below, the screening may prevent children from climbing on the railing and falling off the structure.
- The presence of a transportation facility such as a roadway, a railroad or a navigable waterway below the overpass or bridge. In the case of a railroad, or navigable waterway, the frequency and sensitivity of the traffic passing under the structure shall be taken into account.
- Requirements of the entity or agency over which the structure passes, such as a railroad, the Corps of Engineers or the National Park Service.
- Effect on aesthetics or on maintenance, including inspection, snow removal or ice control or navigation lights, and the maintenance of the screening itself.
- Effects on the safety of vehicles crossing the structure, especially where speeds are high.

2.6 MISCELLANEOUS STRUCTURES

2.6.1 Timber Structures

Timber structures should not be considered as a superstructure type unless the project is designated by the WVDOH as such. Timber structures may be considered for pedestrian bridges.

2.6.2 Pedestrian Structures

Pedestrian bridges should undergo the same design evaluations as vehicular structures. All applicable superstructure types, including timber, shall be considered. In addition, pedestrian bridges should consider aesthetics, from both the user's standpoint as well as the view of the structure by motorists. See AASHTO *Guide Specifications for Design of Pedestrian Bridges*.

2.6.3 Buried Structures

Buried structures such as box culverts and culverts of other configurations may be designed as precast or cast-in-place, or the contract plans may leave the option to the contractor.

All cast-in-place culverts shall be fully designed and detailed in the contract plans. When precast products are specified, the Designer shall also specify all necessary design criteria including design method. Certified design calculations and drawings shall be submitted to the Engineer for approval for precast products.

The Designer should make every effort to use single cell boxes; single cell openings with clear spans up to 16 FT are routinely used. Box culverts of three or more cells should be avoided, due to high construction and maintenance costs. However, high fill heights or other restraints can make three or more cell boxes cost effective.

Future maintenance of the boxes must be considered in the proposed layout. Such considerations should include a maintenance road to the inlet and outlet of the box and debris racks.

Buried structures with 3 FT or less of fill shall be designed with epoxy coated reinforcing steel in the top slab of the structure.

Due to stream mitigation requirements, some box culvert bottom slabs may need to be buried and a natural streambed developed. The Bridge Designer should check to see if this is required on their project.

Culverts shall be designed for discharges as required by the *WVDOH Drainage Manual* and Section 500 of the Design Directives.

2.7 BRIDGE REHABILITATION

In the course of maintaining the State's highway system to accepted standards, it becomes necessary to rehabilitate or replace structures that have become either functionally or structurally obsolete or physically deteriorated to the point that structural capacity is significantly impaired. If rehabilitation is chosen, the durability of the repaired component shall be at least as durable as the original member. The Designer shall verify that the existing bridge components are not adversely affected by the new "global conditions" created from the rehabilitation. The extent of bridge rehabilitation is based on an assessment of current conditions, estimates of future travel demands, and anticipated capital and maintenance investments that will be realized through a specific year. The District Bridge Engineer plays a key role in the selection of bridges for replacement or rehabilitation. Cost estimates should be done to help determine if either replacement or rehabilitation of a structure is needed. Inspection reports are a good basis for determining rehabilitation needs. These reports are available from the Maintenance Division. However, these reports should not be the sole source used by the Designer to develop the contract plans. Generally, a detailed inspection, by the Designer, is required along with material testing. This additional inspection work must be sufficient to detail and quantify the necessary repairs.

See DD-604 and DD-605 for additional information pertaining to bridge rehabilitation.

2.7.1 Bridge Inspection

Bridges are inspected on a periodic basis based on their condition or type. The current frequency for bridges inspection is generally two years with an in-depth inspection every six years. For bridges in good condition, the frequency is sometimes increased to every four years. Bridges that have conditions that warrant concern may be inspected at frequencies less than two years. The Division of Highways determines this frequency based on various criteria approved by the Federal Highway Administration. The inspection can be classified as inventory inspection and report, in-depth periodic inspection, periodic inspection, interim inspection or special inspection per the requirements of the current WVDOT *Bridge Inspection Manual 1990 (Revised July 1996*). This manual is available at the Division of Highways in the Evaluation Section of the Maintenance Division. This manual incorporates by reference, various documents including the following: the AASHTO *Manual for Condition Evaluation of Bridges, 2nd edition*, the U. S. Department of Transportation Bridge Inspector's Training Manual and the National Bridge Inspection Standards (NBIS). All inspections shall be performed in accordance with these documents.

2.7.2 Widening

Widening is usually considered for deck bridges supported on steel or concrete beams or girders. The following items should be addressed in a widening project on all components:

- Materials used in the construction of the widening shall preferably have the same thermal and elastic properties as the existing.
- The widening of the structure should be accomplished in a manner such that the new construction blends with the existing structure.
- The main load carrying members should be proportioned to provide similar longitudinal and transverse load distribution characteristics as the existing structure. The final design shall result in a structure with a uniform stiffness over the entire cross section.
- The construction sequence and degree of interaction between the widening and the existing structure after completion shall be fully considered in determining the distribution of the dead load for design of the widening and stress checks for the existing structure.
- The design of the widening shall conform to the Governing Specifications. This shall include the verification of all existing components using LRFD.
- The use of beams that are the same type as the existing beams are preferred.
- All dimensions that affect the details that the Designer is preparing shall be confirmed by the Designer or the Contractor. The dimensions that are to be checked by the Contractor must be called out for in the contract plans.
- All horizontal and vertical clearances shall be checked. For decks with normal crown or superelevation, the new fascia beam may become the lowest point on the deck, so vertical clearance must be checked.
- The widened deck section should be structurally attached to the existing deck and the transfer of moment and shear shall be provided using dowels with sufficient splice laps. A concrete shear key is not necessary but a roughened construction joint should be used. A closure pour should be generally used when construction staging does not prohibit its use.
- A construction sequence detail, including maintenance of traffic details, shall be shown on the preliminary bridge plan submittal for all projects utilizing phased construction. In addition, the final plans shall include a complete outline of the order of construction.
- Changes to existing drainage must be investigated.

2.7.3 Rehabilitation Techniques

The following sections describe various methods for repairing and rehabilitating bridges. These are in no way meant to limit the Designer to these methods but to give guidance in accepted procedures. All plans developed for rehabilitation shall include appropriate

details to comply with AASHTO Standard Specifications for Seismic Design of Highway Bridges.
The following shall be considered on all rehabilitation projects:

- Structural integrity and general acceptability of design
- Future maintenance considerations
- Hydraulic considerations (waterway opening, backwater effect, etc.)
- Geometric safety (roadway width, guardrail, etc.)
- Right-of-way clearance
- Department of Natural Resources (DNR) and Corps permit clearance
- Erosion Control
- Suitability of the sequence of construction required by the design

All material used in any rehabilitation or repair project shall be in accordance with the Standard Specifications and supplemented by project specific special provisions, as necessary.

2.7.3.1 Steel

Repair of steel members may be necessary to correct deficiencies associated with cracking, corrosion, and fatigue. This includes cracking of joints and welded connections, partial length cover plates, and brackets. Fracture-critical members require special assessment because their failure would be expected to result in bridge collapse. All repairs shall consider the dead load that exists in original members and the original members shall not be stressed beyond their original allowable inventory stress level. All steel repairs shall be in accordance with the Steel Structures section of the Governing Specifications. All repairs to welds on steel members shall be in accordance with the AASHTO/AWS D1.5M/D1.5: 2002, *Bridge Welding Code*.

2.7.3.1.1 Cracks

One method for preventing crack propagation is by drilling holes at the ends of the crack. Consideration shall also be given to filling the hole with a tightened high strength bolt to aid in arresting further propagation. Dye penetrant is used to locate and determine the extent of surface cracks. The center of the drilled hole should be positioned so that the end of the crack is located within the hole. If the crack is visible on both sides of the plate, the position of the outside diameter of the hole is at the end of crack that has propagated farthest. Dye penetrant is again used to ensure that the crack did not propagate through the drilled hole. The Federal Highway Administration has published guidelines on this procedure that are available at the Division of Highways.

Welding can be used to repair typical cracks in flanges and webs of beams or girders. Welding in connection with crack repair shall be done in accordance with AWS and the Governing Specifications. The weldability of the bridge material must be assessed prior

to the repair procedure to insure a successful weld repair. See the section on fatigue to avoid use of fatigue-critical weld details.
Superficial nicks and gouges should be repaired by grinding rather than by welding repairs.

2.7.3.1.2 Painting

Repair work for corrosion may include painting of the structure. This consists of surface preparation, prime coating, and finish coating and shall be in accordance with the Painting Steel Structures section of the Standard Specifications and Appendix D, Coatings.

The Designer is responsible for determining the presence or absence of lead based coatings by requesting that the Division of Highway's Materials Control, Soils and Testing Division conduct a field survey. If a lead based coating is present then the project plans shall contain a note as follows: "The contractor's attention is directed to the fact that the existing structure contains lead based paint coatings".

2.7.3.1.3 Fatigue

In zones of tension stress, when fatigue critical details exist, action must be taken to improve the expected fatigue life of the detail unless a cumulative damage fatigue analysis yields adequate life. The Designer should not use Category D, E or E' weld details for a repair or a new design. The fatigue life analysis shall be performed in accordance with the current version of the *AASHTO Guide Specifications for Fatigue Evaluation of Existing Steel Bridges.*

In designing a fatigue repair, an examination of the existing connections should be performed. The repair should be one that attempts to reduce the fatigue category of the existing connections. The Designer shall consult the Governing Specifications for common connection details and their fatigue category. Figures 2.7.3.1.3A and 2.7.3.1.3B illustrate two accepted fatigue repairs.

2.7.3.1.4 Section Loss

Cover plates are an effective means for restoring section loss in a member. The member must be analyzed to ensure its original capacity can be attained with the addition of cover plates. Details of repairs are largely up to the Designer's creativity. The Designer must consider the fatigue characteristics of the repairs they design. If excessive deterioration exists, then replacement of the member may be required.

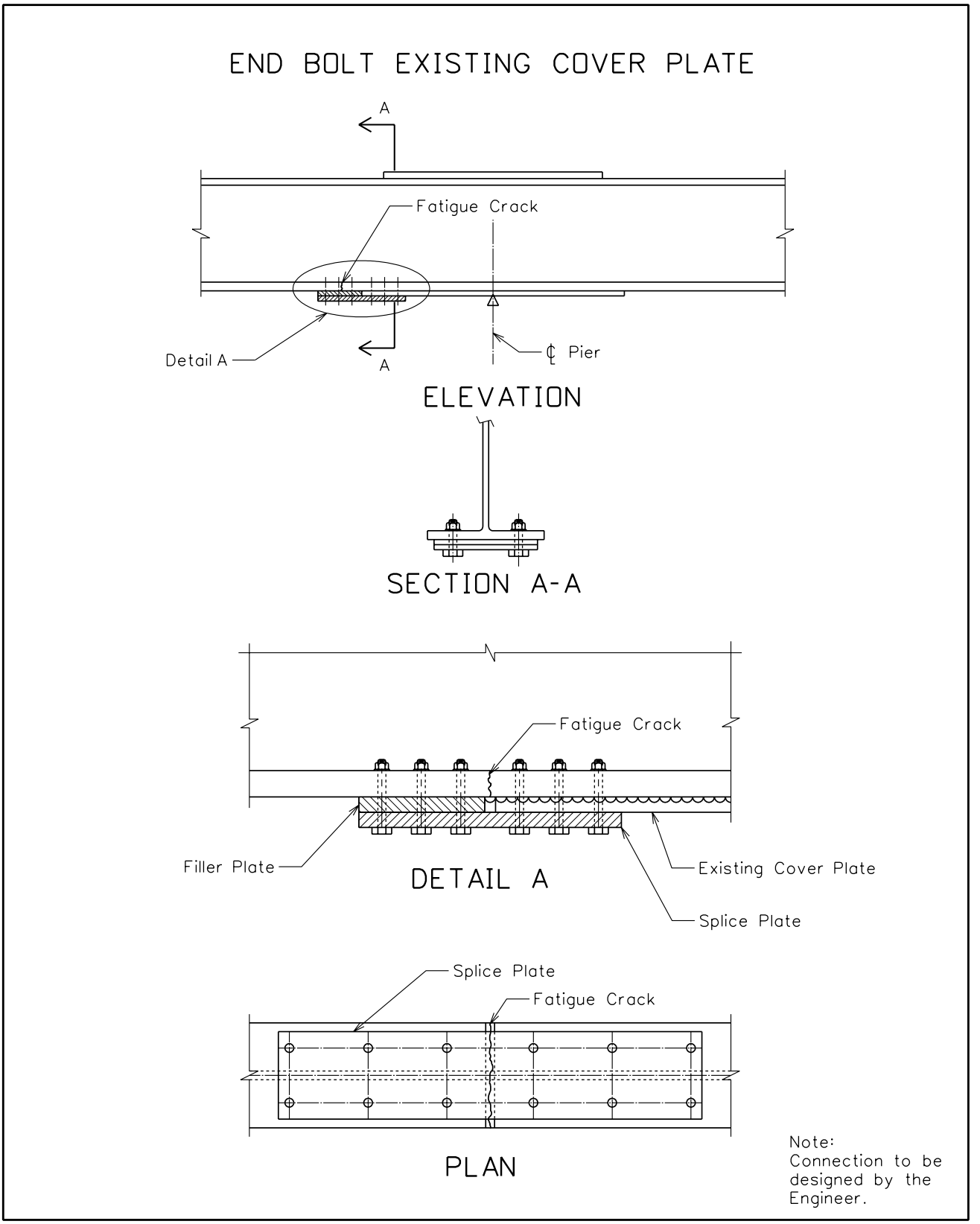

Figure 2.7.3.1.3A

TYPICAL WEB FATIGUE CRACK REPAIR DETAIL

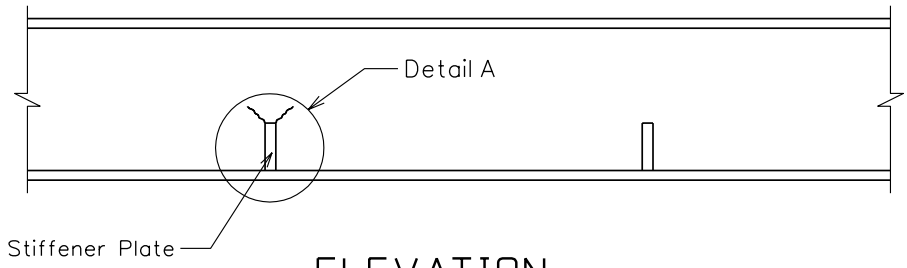

ELEVATION

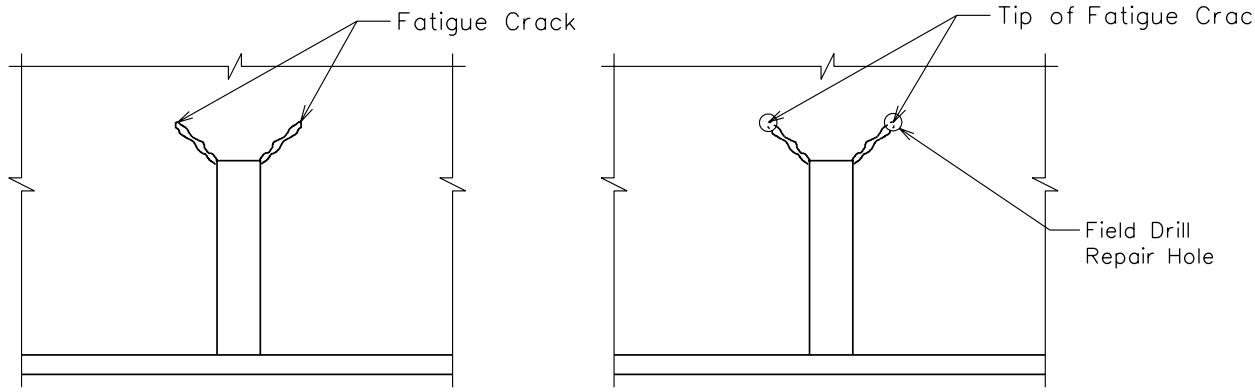

EXISTING REPAIR

DETAIL A

Note:
Hole diameter to be determined by the Engineer.

Figure 2.7.3.1.3B

2.7.3.2 Concrete

The intent of repairing concrete is to restore the structural integrity and function of the concrete. Typically, concrete repairs consist of removing deteriorated concrete and replacing it with cement mortar or another suitable material. Restoring proper cover, where existing cover is inadequate, is important in selecting repair materials. The following factors should be considered:

- structural compatibility of the material and its expected performance with the original construction,
- availability, cost and anticipated life, and
- ease of construction and availability of qualified contractors in the area.

Initially, all exterior concrete surfaces should be thoroughly examined by means of soundings with hammers to determine loose or defective areas that may exist beyond the visual assessment of deficiencies and deterioration. Defective areas should be removed to a depth necessary to eliminate any loose and disintegrated materials. All exposed reinforcement should be cleaned, care being taken to not damage the steel. Loose reinforcement should be tied back into place and, where necessary, concrete adjacent to loose bars shall be carefully undercut to a depth that permits a minimum of one inch of new concrete around the reinforcement bars. Sections with deteriorated bars should be re-evaluated and capacities restored, when necessary. The area of concrete removal should be large enough to allow for adequate bar splicing. The exposed area of concrete should be cleaned. Where concrete deterioration requires removal beyond half the depth of the member, consideration may be given to the replacement of the entire section in the deteriorated area.

A good bond between the repair material and existing concrete surfaces is essential in concrete repair. An epoxy-bonding coat applied just before the repair material can help to obtain a good bond. Dowel bars may be required in a section that is subjected to forces where the bond between the new concrete and the old section is not considered sufficient to transfer the loads. Dowels may consist of expansion anchors, grouted anchors, power-activated anchors, and epoxy and polymer grouts and resins. External or internal vibrators may be used for compaction. Proper curing is essential to ensure that excessive shrinkage will not occur.

Shotcrete can be used as a means for rebuilding an area where deteriorated concrete has been removed. Shotcrete applications are justified where large areas must be repaired and where conventional methods of forming and placing concrete are less suited to the damaged areas, such as vertical and overhead surfaces. Shotcrete application shall be in accordance with the Pneumatically Applied Mortar section of the Standard Specifications.

Cracks in concrete must be repaired to stop intrusion of water or chemicals into the concrete, and restore the uniform appearance of the concrete surface. Epoxy grouts are typically used for crack repair. This involves injection of low viscosity material under

pressure with the intent to seal the crack and restore structural continuity. Where active cracking conditions exists, it must be dealt with by addressing the cause directly.

Grouting can also be used for the repair of concrete substructures submerged in water. This type of repair may necessitate the use of pile jackets or formwork.

All concrete repairs shall be in accordance with the Governing Specifications.

2.7.3.2.1 Concrete Decks

Most repairs needed in bridge decks are associated with increased traffic, heavier vehicles, deicing chemicals, and geometric deficiencies as a result of the initial construction. Common problems are cracking, spalling, chloride contamination, potholing, and delaminating. Cracking in the deck can be repaired as described in the previous section. Minor spalling, potholes, etc. may be temporarily repaired with patches. Patches cannot be considered a permanent solution. Eventually, a bridge deck becomes a composition of patches with no end to the repair process. As the patching process is repeated to repair more damaged areas, an overlay will be needed to serve as a wearing surface and a moisture barrier.

When repairs on a concrete slab become too costly, partial or complete replacement of the deck is needed. See Section 3.2 for design details for concrete decks.

See Appendix A for the Deck Removal-Grinding note to be included on the General Notes sheet for all projects requiring partial or complete deck removal on existing bridges.

2.7.3.2.2 Deck Overlays

When a specialized concrete overlay (SCO) is used on a deck greater than 7.0 IN thick, the deteriorated concrete shall be removed by rotomilling to 1.0 IN above the rebar followed by hydro-demolition. Conventional concrete removal, such as rotomilling and the use of pavement breakers shall not be utilized for slabs less than 7.0 IN thick. For slabs, 6.5 to 7.0 IN thick, special consideration must be given to methods of removal of the deteriorated concrete, such as hydro-demolition, so that damage of the remaining slab is minimized. A specialized concrete overlay will not be considered an acceptable method for deck retrofit for any bridge deck where the original slab thickness is less than 6.5 IN.

2.7.3.3 Additional Rehabilitation Issues

In past years, it was general practice in the steel bridge building industry to attach miscellaneous brackets, supports and details to the top flanges of stringers and floor

beams by field welding. This work was not detailed on contract plans or steel fabrication drawings and was done to facilitate temporary support of various construction aids. The welding may have been performed under limited or no supervision, without proper preheat of the base material using electrodes of unknown quality and condition. Most of these welds were not removed prior to placing the deck.

The industry has since learned that these unauthorized welds are a potential source of fatigue cracking in the negative moment regions of the member flanges and should be removed during subsequent deck replacement. After removal, nondestructive testing is also appropriate to assure integrity of the member flange.

2.7.3.4 Timber

Timber members may experience deterioration from decay, insect attacks, and mechanical damage.

Surface treatments or coatings are applied to existing bridge members to protect the wood. This is most effective when applied before decay begins and is used to treat splits, delaminations, mechanical damage or areas that were field-fabricated during construction. Shallow penetration limits its effectiveness against established internal decay. Creosote is the preferred treatment. The wood surface should be thoroughly saturated with the treatment so that all cracks and crevices are coated. However, care must be exercised to prevent excessive amounts from spilling or running off the surface and contaminating water or soil. The effectiveness of surface treatments depends on the thoroughness of application, wood species, size, and moisture content at the time of treatment.

Mechanical repair methods use steel fasteners and additional wood or steel components to strengthen or reinforce members. These methods include splicing and stress laminating. Splicing is used to restore load transfer at a break, split, or other defect. Stress laminating may be used for the repair of nail-laminated decks.

Epoxy resins are used as a bonding agent in timber repairs. Epoxy seals the affected area, preventing water and other debris from entering. This should be limited to cosmetic repairs involving surface damage, not internal insect damage.

All timber repairs shall be in accordance with the Governing Specifications.

2.7.3.5 Deck Joints

The following sections describe rehabilitation techniques associated with commonly used types of expansion joints. It is the WVDOH's policy to eliminate deck joints where practical. When replacing an expansion joint, the installation procedures shall be in accordance with the Governing Specifications and the Manufacturer's instructions.

2.7.3.5.1 Open Joints

Finger joints are considered open joints. The major problems associated with finger joints are poor drainage, closed fingers, and loose attachments.

Improper drainage allows deicing chemicals, roadway grit, and gravel to collect on supporting beams and substructure units, causing accelerated rusting and concrete deterioration. Poor drainage can be corrected by first flushing the area to remove debris, then installing sheet metal deflectors or a neoprene trough to divert drainage and prevent the accumulation of debris. Future drainage problems can be prevented through frequent clearing of the drain troughs.

Finger joints that have become permanently closed can exert considerable forces on adjacent structural elements. Closed finger joints are a result of excessive movements of substructure units or insufficient allowances for roadway expansion. If roadway expansion is the cause of the joint closure, a pressure relief joint should be installed in the concrete approach pavement. When joints close due to excessive substructure movements, the unit that is causing the closure should be shifted to correct the problem. If the substructure unit is an abutment, the preferred solution, if practical, is to remove the joint and construct a semi-integral abutment. If the previously stated repairs are not economical, then the suggested means of relieving the pressure is to trim the expansion fingers or to remove and reinstall the entire joint system.

Structural components that have become loose, as a result of vehicular impact, can cause the joint to move in unanticipated ways and damage adjacent concrete. Excessive vertical movement may result in misalignment that can pose a roadway hazard. Finger bars that have broken loose at the welds should be repositioned and welded. Damaged curb plates, if still properly attached, should be straightened in place. Damaged concrete adjacent to the finger joint should be replaced.

2.7.3.5.2 Closed Joints

Elastomeric expansion devices, compression seals, and strip seals are considered closed joints. Each type of closed joints has specific problems associated with them.

Elastomeric expansion devices are a sealed, waterproof joint consisting of steel plates and angles molded into a neoprene covering. Common joint failure occurs in the form of leaking, delamination, loosened or damaged anchor bolts, and damage caused by snowplows during snow removal. An elastomeric joint that shows signs of leaking can be repaired by resealing the joint. Where severe leakage has occurred, the entire section should be replaced. Elastomeric joints that have become delaminated should be replaced. Proper anchorage can be achieved by replacing loose or damaged anchor bolts with new bolts. A section of an elastomeric device that has been damaged by snowplows shall be replaced with a new elastomeric section.

Compression seals are extruded neoprene shapes that are chemically bonded to the adjacent structures. One common failure of compression seals is the loss of bond between the joint material and the adjoining concrete or steel section. The neoprene can also become twisted if the concrete surrounding the joint armoring is not fully consolidated. An acceptable repair for these problems is a complete replacement of the compression seal with a two-part silicone sealant. However, this should only be performed if the concrete headers are found to be in satisfactory condition. If headers have failed, replace with an elastomeric expansion device. If it is practical, the desired repair for a compression seal is to replace the joint and convert the abutment into an integral or semi-integral abutment.

Strip seals consist of a heavy duty-neoprene gland, snaplocked into an extruded steel anchorage. Failures found in strip seals are similar to the ones associated with those of a compression seal; loss of anchorage and deformation of the neoprene gland. A common repair is to remove the damaged neoprene gland and spalling concrete, patch the concrete with an elastomeric concrete, then reinstall the neoprene gland after the concrete has cured. If it is practical, the desired repair for a strip seal is to replace the joint and convert the abutment into an integral or semi-integral abutment.

2.7.3.6 Bearings

The following section will briefly discuss problems common to all types of bearings. This applies to expansion, fixed, pot, sliding and elastomeric bearings. The accumulation of debris on bridge seats attracts and retains moisture. This, combined with deicing chemicals, will cause corrosion of any steel member; particularly components subjected to movement and large forces. Any repairs shall be in accordance with the Governing Specifications.

The decision to repair or replace should be based on the ability of the device to transfer vertical loads and to accommodate superstructure movement. Deficiencies that in most cases warrant repair include the following:

- light rust or surface scaling of non-contact surfaces,
- loss of lubrication,
- debris and dirt accumulation on the bearing seat,
- minor tilting and displacement of bearing components,
- rusted masonry and keeper plates, and
- missing nuts or deteriorated anchor bolts.

Bearings requiring replacement are ones that are severely deteriorated, suffered loss of function, and exhibit signs of imminent structural instability. The following can be used as a guideline in the choice of bearing replacement:

- the ability of the bearing to provide the same functions as the existing in terms of load transfer and movement,

- compatibility with the environment,
- dimensions of new bearing, particularly the height, and
- structural compatibility of the bearing with other bridge components.

2.7.3.7 Historical Structures

Historic structures that are scheduled for rehabilitation shall adhere to the United States Department of Interior's *Standards for the Treatment of Historic Properties*. These standards can be obtained from the WVDOH's Environmental Section. The Designer shall work closely with the WVDOH on historic rehabilitation projects.

2.8 BRIDGE PERMITS

The Designer shall contact the Engineering Division of the WVDOH at the span arrangement stage to determine the required permits based on anticipated construction methods. The Bridge Designer is responsible for preparing the required permit package. See Appendix B for permit checklists. The Project Manager submits the permit to the appropriate agency.

The Designer shall obtain confirmation from the Bridge Project Manager on whether a mussel survey, for freshwater or endangered mussels, should be performed in the project area.

2.8.1 Coast Guard

The U. S. Coast Guard (USCG) requires their prior approval for navigable stream crossings.

The Engineering Director is responsible for obtaining a permit from the Commandant, United States Coast Guard. The permit approves the location and plans for the construction or alteration of any bridge on the State Highway System over navigable streams. Alteration is taken to mean changes to the existing navigation clearances.

Navigation lights and vertical clearance gauges are conditions of the permit and are subject to Coast Guard approval. The Coast Guard, not the State, makes the determination of need for this permit. In general, permits are required throughout West Virginia for streams to the head of navigation and three miles further upstream.

The following is quoted from the *Coast Guard Bridge Permits* publication:

> "Waterway Requiring Bridge Permits:
>
> Coast Guard jurisdiction is limited to the construction or alteration of bridges and causeways over waterways that have been determined to be navigable waterways of the United States by the U. S. Coast Guard. Navigable waterways of the United States for bridge administrative purposes are: (1) All waters that (i) are used, or are susceptible for use, by themselves or in connection with other waters in highways for substantial interstate or foreign commerce, or (ii) a governmental or non-governmental body having expertise in waterway improvement determines that the waterway is capable of improvement at a reasonable cost to provide, by its self or in connection with other waters, highways for substantial interstate or foreign commerce; or (2) all waters subject to the ebb and flow or the tide; or (3) tributaries and embayments which are lateral extensions of navigable waterways from the confluence up to the upstream to the limit of ordinary high water (navigable-in-law).
>
> For these reasons, anyone planning to construct a bridge or causeway over a waterway which might be considered navigable under the above criteria, should contact the…[Eighth Coast Guard District, Bridge Branch, 1222 Spruce Street, St. Louis, Missouri 63103-2398, Telephone No. (314) 539-3900, Ext. 2378 for assistance]. However, prospective bridge builders are under no obligation to seek out a determination from the Coast Guard unless the nature and character of the waterway belies any reasonable conclusion that the waterway is navigable; the burden, if any, rests with the Coast Guard to determine the facts and reach a determination on its own motion or in response to a complaint.
>
> Advance Approval Category Waterways:
>
> The commandant, U. S. Coast Guard, has given his advance approval to the location and plans of bridges to be constructed across certain minor waterways navigable-in-law but not actually navigated other than by logs, log rafts, rowboats, canoes and small motorboats. In such cases, the clearances provided for high water stages will be considered adequate to meet the reasonable needs of navigation. Persons planning to construct a new bridge or causeway or alter an existing bridge or causeway over a navigable waterway are urged to contact the Coast Guard. Any case of reasonable doubt will be resolved by the usual practice of notice or hearing prior to a specific approval of the location and plans for the proposed structure based upon findings made at the time and under the conditions then existing."

In early project development stages, the designer in consultation with the WVDOH is responsible for assessing the need for a Coast Guard permit. The Designer should initiate contact with the USCG at the earliest possible stage of project development, providing opportunity for Coast Guard involvement throughout the environmental review process in accordance with 23 CFR, Part 771. The environmental section should be consulted for coordination procedures.

2.8.2 U. S. Army Corps of Engineers

The U. S. Army Corps of Engineers (Corps), under the authority of Section 404 of the Federal Clean Water Act, requires a landowner to obtain a permit from the Corps prior to beginning any non-exempt activity involving the placement of dredged or fill material in waters of the United States, including wetlands. "Waters of the United States" includes lakes, rivers, streams, wetlands, and other aquatic sites.

Any activities that will result in the excavation, discharge or placement of dredged or fill material into waters of the United States, including wetlands, will require a section 404 permit.

Individual permits are issued to a single entity (individuals or companies) to authorize specific activities. Once the U. S. Army Corps of Engineers receives a complete permit application, a public notice is issued which describes the proposed project. The Corps evaluates all comments received and makes a final permit decision.

General permits are issued to the public-at-large to authorize specific activities that have minimal environmental impacts such as bank stabilization activities or construction of farm buildings. A general permit can be issued on a state, regional, or nationwide basis. Activities authorized by a general permit require less review than an individual permit would require. The WVDOH does not have any state or regional permits. Therefore, individual or nationwide permits must be used.

2.8.3 106 Process (Historic)

The Bridge Designer shall be responsible for discussing with the Project Manager to determine if the bridge is considered historic and if there are any special requirements to be included in the design. Having environmental clearance does not mean that there are no other considerations to include.

2.9 ALTERNATE BRIDGE DESIGN

On large, complex bridges, it is likely that limiting the design to one material type will unnecessarily limit the number and competitiveness of potential bidders. It is in these cases that alternate designs are economical in terms of the extra design cost and additional time. When alternate designs are required, it is desirable that one superstructure is to be designed with steel and one with concrete. Alternate designs utilizing the same materials, on occasion, can be possible. In certain cases, it may be appropriate to have different superstructure material types for main spans and approach spans.

The Director of Engineering Division will determine, on a case-by-case basis, when alternate designs are to be required. Both alternates shall have the same design life, take a similar amount of time to construct, and shall have similar serviceability.

2.10 RAILROAD CONSIDERATIONS

The preliminary plans for bridges to be constructed over railroads shall be submitted to the owner of the railroad by the Project Manager for review and approval. Bridge structures over railroads should generally be prepared following the basic geometric clearances shown in Figure 2.10. This figure represents the geometric requirements of the Norfolk Southern Corporation and CSX Transportation, Inc. and may vary when applied to other railroads.

2.10.1 Approval

The designer shall provide the clearance information for submission to the Railroad for their approval. The data shall identify the railroad division, the railroad valuation station at the centerline of bridge, the distance from the nearest milepost to centerline of bridge, the WVDOH crossing number and the state project number.

2.10.2 Crash Walls

To limit damage by the redirection and deflection of railroad equipment, piers supporting bridges over railroads and with a clear distance of less than 25 FT from the centerline of a railroad track shall be of heavy construction (defined below from *CSX Transportation Criteria for Overhead Bridges*) or shall be protected by a reinforced concrete crash wall. Crash walls for piers 12 to 25 FT clear from the centerline of track shall have a minimum height of 6 FT (10 FT for Norfolk Southern) above top of rail. Piers less than 12 FT clear

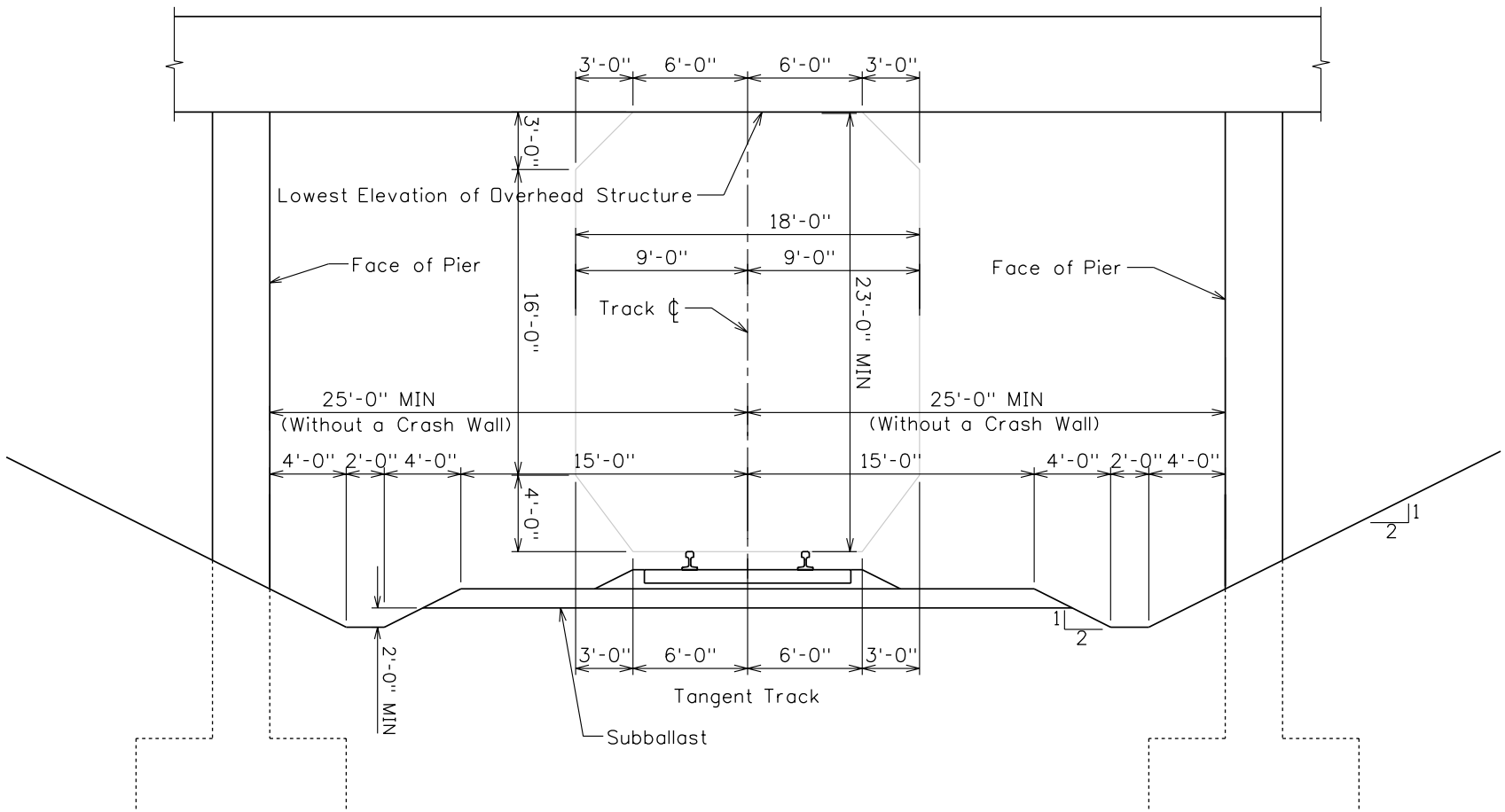

CLEARANCES REQUIRED FOR OVERHEAD STRUCTURES
TYPICAL ROADBED SECTION WITH STANDARD DITCHES

NOTE:
For multiple tracks, standard track centers is 15'-0".

From CSX Transportation Criteria for Overhead Bridges

Figure 2.10

from the centerline of track shall have a minimum crash wall height of 12 FT above the top of the rail.

The crash wall shall be at least 2.5 FT thick and at least 12 FT long. When two or more columns compose a pier, the crash wall shall connect the columns and extend at least one foot beyond the outermost column parallel to the track. The crash wall shall be anchored to the footings and columns, if applicable, with adequate reinforcing steel extending to at least 4 FT below the lowest surrounding grade.

> "Piers shall be considered of heavy construction if they have a cross-sectional area equal to or greater than that required for the crash wall and the larger of its dimensions if parallel to the track."

Consideration may be given to providing protection for bridge piers over 25 FT from the centerline of track, as conditions warrant. In making this determination, account shall be taken of such factors as horizontal and vertical alignment of the track, embankment height, and an assessment of the consequences of serious damage in the case of a collision.

2.10.3 Clearances

Minimum vertical clearance above the high rail shall be 23 FT. Rehabilitated or widened bridges will generally be allowed to maintain existing vertical clearance, but no less.

The preferred horizontal clearance from centerline of track to the face of the structural element is 25 FT. The absolute minimum on all new construction is 12 FT. Rehabilitation bridges will generally be allowed to maintain existing horizontal clearance, but no less.

See Figure 2.10 for an illustration of vertical and horizontal clearances.

The Railway-Highway Provisions of the Standard Specifications state there can be no work within railroad right-of-way without first obtaining authority from the Railroad's Chief Engineer. The designer should consider these restrictions in the design process to minimize encroachments.

2.10.4 Drainage

Proper drainage of railroad right-of-way must be considered during the layout and design of a railroad overpass.

Substructure units and embankment slopes shall not interfere with railroad ditches.

Deck drains shall be placed to prevent discharge onto the railroad right-of-way.

The Designer shall verify any additional drainage issues with the Bridge Project Manager.

2.11 BRIDGE DOCUMENT SUBMISSIONS

A detailed checklist for each submission is included in DD-202. The following sections give a brief description about each submission.

2.11.1 Design Report

A design report is a preliminary engineering study of proposed alignments for a project. The report will be subject to two scheduled reviews: Design Report Field Review and Design Report Office Review. Refer to DD-202 for more details for each submission requirements.

The Bridge Designer's tasks are to provide the necessary bridge information, cost estimates, and sketches for the report to be developed. This requires the Bridge Designer to look at existing conditions (geometry, major utilities, right-of-way, existing and/or adjacent structures, etc.), historical data, hydraulic opening, and proposed alignments to assist in the development of the report. The Bridge Designer should develop a cost and a plan and profile drawing for each alternate. These drawings are simple line drawings with minimal details (stationing, grades, vertical and horizontal curve data, etc.). The cost estimates shall be based on historic data for similar structures on a cost per square foot basis.

2.11.2 Pre-Span Arrangement Meeting

Prior to the submission of the Span Arrangement Report, the Bridge Designer shall meet with the Bridge Project Manager to discuss the feasible structural systems and span arrangements that should be included in the report. The purpose of this meeting will be to eliminate or add additional alternates for further consideration. This will save considerable time in the Span Arrangement submission stage. The Bridge Project Manager will make this final decision on what alternates should be studied.

At this meeting, the Bridge Designer should provide the following:

- Preliminary line and grade.
- Draft site plan for each recommended alternate showing both plan and profile views. Abutment location should be fairly accurate at this time. Piers should be located for each alternate being studied.
- Discussions on why alternates were chosen and others were not.

- Location of utilities, environmental concerns, roads, railroad tracks, etc. Include any obstacles that may influence recommendations.
- Superstructure types being considered.

At this time, no cost estimates, or girder analysis should be completed.

2.11.3 Span Arrangement Study

The Span Arrangement shall be submitted with the Preliminary Field Review Plans for the line and grade studies. The purpose of the Span Arrangement Study shall be to investigate all types of feasible structural systems, span arrangements, and establish all basic design and plan preparation parameters. Following the approval of the Span Arrangement Report and the Preliminary Field Review Plans, the Designer may obtain structural borings for the bridge. Approval of the Span Arrangement Report on any project shall not limit or preclude the taking of additional borings required by the Division of Highways following review of the TS&L nor does it constitute final acceptance of structure type or span arrangement. Please refer to Section 2.3, Geotechnical Investigations, concerning core borings and foundations.

The following list describes some of the information that should be included in the report. See DD-202 for a detailed list for each submission.

- Alignment, grades, typical sections, and superelevations used shall be documented in the Preliminary Field Review Plans.
- Consider all viable construction materials. Equal treatment between alternates is essential in ensuring competition and optimum cost-effectiveness. Uniformity of design criteria, material requirements, and appropriate unit costs shall be considered and documented.
- Hydraulic study (if crossing a waterway) justifying the proposed span arrangement, scour features, and grade shown in the Preliminary Field Review Plans.
- Discuss constructability, any special staged construction, clearance criteria (if crossing a road, railroad, or navigable waterway), freeboard (if crossing a waterway), and maintenance of traffic requirements.
- A description of the proposed superstructure depth and preliminary superstructure type utilized in the study, for each alternative span arrangement.
- All proposed computer software to be used during the "Combined TS&L" phase and final design phases of the bridge project.
- Deck drainage, superstructure joint, and bearing device requirements.
- Special environmental, aesthetic, and utility considerations.
- A description of the assumed foundation type used for cost estimates and geotechnical data.
- A preliminary total structure cost estimate for each span arrangement studied.

- Note proposed right-of-way limits, construction easements, and future maintenance operations.
- A detailed discussion documenting the Designer's recommended bridge layouts, to be advanced to the Combined TS&L phase, and the reasons for their selection. In most cases, the Bridge Designer is encouraged to recommend advancement of at least one concrete and one steel superstructure alternate. However, more than two alternates may be advanced.
- Unit prices shall be submitted for approval for all pay items that may be used during the plan development process.

The decision on what alternates are advanced is based on several factors:

- Cost of each alternate (cost differences of 10% or less at this stage are considered to be the same cost)
- Future maintenance costs
- Aesthetics
- Environmental concerns
- Constructability
- Redundancy
- Additional construction costs inherent of complex structures

All of these factors shall be taken into consideration, with present cost being the primary concern, to determine the recommended alternates. The ultimate decision is made by the Bridge Project Manager.

2.11.4 Type, Size and Location (TS&L)

Preliminary superstructure and substructure plans shall be submitted to the Engineering Division for approval of the recommended alternate prior to proceeding with final bridge design and the Final Detail Plan Submission.

Based on the approved Span Arrangement Study and approved Preliminary Field Review Plans, various alternates shall be studied to determine the most suitable structure. Consideration shall be given to both steel and concrete superstructures based on economics, serviceability, aesthetics, maintenance, and future use. Each alternate shall be developed equally. Recommendations should not be made until all information is complete for each alternate.

The specified grade(s) of steel used in the design will be as determined through performance requirements, availability and initial and long-term costs. Comparative studies will be completed during the TS&L Study. Results and recommendations will be provided in a clear and concise format, providing sufficient justification for the recommendations made.

At the time of selecting the preferred material type, life cycle costs may be considered. This consideration may include initial cost as well as expected maintenance cost and service life. For routine structures, this evaluation should be very informal and it will be the decision of the Bridge Designer to recommend the appropriate superstructure type based on experience and knowledge of the site.

It is recommended that two superstructure types be considered for most bridges in the TS&L stage. However, with the approval of the Bridge Project Manager, some smaller bridge projects may require the consideration of only one alternate.

The following list describes some of the information that should be included in the Combined TS&L Submission. See DD-202 for a detailed list.

- Key dimensions for superstructure and substructure. These dimensions should be very close to the final plans.
- Final grading.
- Deck drainage type.
- Design data - live load, future wearing surface, method of design, etc.
- Type of expansion joints (if applicable).
- Type of bearings and justification for their use.
- Detailed hydraulic study and design, including the scour analysis and design form DS-34 shall be submitted as follows
    - For District Design - Submit copy at TS&L stage to the District Bridge Engineer.
    - For Engineering Division In-House Design - The original copy of DS-34 will be submitted to the District Bridge Engineer.
    - For Consultant Design - The DS-34 form shall be submitted to the Engineering Division, Consultant Review Section.
- Discussion and full description of the various superstructure and substructure types that were considered. This shall include a discussion of any structure types that were not considered and the reason for elimination.
- Any proposed proprietary walls shall be investigated for applicability.
- A detailed total structure cost estimate for each appropriate superstructure/substructure combination to be developed in the Final Detailed Plan Submission.
- A detailed discussion of the advantages and disadvantages of the various structure types studied.
- The recommended superstructure and substructure to be developed in the Final Detailed Plan Submission. The ultimate decision shall be made by the Bridge Project Manager.
- A complete list of all project specific Special Provisions.
- Discussion of external stability for walls, embankment and temporary works.

2.11.4.1 Geotechnical Report

The Geotechnical Report shall be submitted with the TS&L Submission. It shall contain an evaluation for each foundation type (piling, spread footings, drilled caissons, etc.). It shall also include the background information used, subsurface information, test results, assumptions made, and a discussion on the foundations recommended for final design.

External influences (e.g., slope stability and scour) must be addressed, and remedial measures must be recommended when required. Potential problems, which might require more information or further consideration before final design or during construction, should also be cited.

2.11.5 Final Detail Plans

The Final Detail Plan Submission shall be submitted to the WVDOH for approval prior to submission of the PS&E Plans for comments and approval. At this stage, the plans and design shall be 100% complete. They should be ready to go to contract if no comments are given.

The following list describes some of the information that should be included with the plan submission. See DD-202 for a detailed list.

- Plans in 11 x 17 format
- Detailed cost estimate
- All applicable special provisions
- Contract completion time chart
- Reference to standard bridge and roadway drawings
- Copy of TS&L comments and actions taken
- Final Hydraulic Report
- Table of loads and factors to be used for bridge rating purposes
    - See DD-202 for bridge rating checklist

All plans shall be developed in accordance with Section 4 of this manual, General Plan Presentation.

2.11.6 Plans, Specifications and Estimates (PS&E)

The PS&E Submission is a project level submission, where the bridge plans are incorporated into the roadway plans.

This submission will be used to advertise the project for construction; it may be referred to as the PS&E Package. It shall include all revisions requested at the Final Plan Submission stage.

Plans include the following:

- Final plans in 11 x 17 format
- Standard Details (see Section 4)
- Contract Plans (see Section 4)
- Right-of-way Plans (see DD-301)
- See the following Design Directives for further information on plans
  - 701 – Plan Presentation
  - 702 – Title Sheet Signature Block
  - 703 – Plan Revision Blocks
  - 704 – General Notes
  - 705 – Quantities
- Full size mylar of title sheet, stamped by engineer registered to perform design work in West Virginia
- Electronic plans (if requested)

Specifications include the following:

- Standard Specifications (see Section 4)
- Supplemental Specifications (see Section 4)
- Special Provisions (see Section 4)

Estimates include the following:

- Contract Time Determination (see DD-803)
- Engineer's Cost Estimate (see DD-707)

A more detailed description of these components can be found in DD-706.

In order to assure consistent PS&E Packages, the Project Manager is responsible for the inclusion of the PS&E Checklist in the PS&E Package.

2.11.6.1 Establishing Contract Duration

The Designer is responsible for the development of a contract duration time bar chart. This chart is to be included in the submittal of a project for PS&E to determine the contract completion date. As a guide in this process, the WVDOH has published the *Guidelines for Production Rates and Chart for Contract Duration* (DD-803). This document is to be used as a starting point in determining contract duration, and should be augmented with outside sources of information, past experience with work of a similar nature, and good engineering judgment.

2.11.6.2 Engineer's Cost Estimate

The Engineer's Cost Estimate shall be an accurate reflection of the anticipated costs of the various items of work that are contained in the construction project. It is the responsibility of the Designer to provide this with the PS&E Package. Design Directive 707 details the requirements for the Engineer's Cost Estimate. In addition, the WVDOH annually compiles a book of Average Unit Bid Prices for the previous year's construction projects. This publication can be used to begin the estimating process for any individual items of work that are to be utilized on a project.

It is advisable to consult past projects of a similar nature and scope near the project that is being estimated to arrive at realistic cost data.

2.11.7 Tracings

This submission includes the reproducible set of tracings, design calculations and electronic plans, if requested.

SECTION 3 - DESIGN

3.1 DESIGN CRITERIA

3.1.1 Working Stress Design

Effective July 1, 1998, the Working Stress Design Method is no longer approved for the design of structures.

3.1.2 Strength Design (LFD)

Effective July 1, 1998, the Strength Design (LFD) Method is no longer approved for the design of structures, except for curved girders (see Section 3.3.10) and load rating (see Section 3.15), without the approval of the Director of the Engineering Division.

3.1.3 Load and Resistance Factor Design (LRFD)

All structure designs started after July 1, 1998, shall be in accordance with the latest edition (including interim specifications) of the AASHTO Load and Resistance Factor Design (LRFD) Specifications, hereafter referred to as the Governing Specifications or AASHTO.

3.1.4 Loads and Load Factors

3.1.4.1 Loads

The Designer must consider all loads that are expected to be applied to the structure. These loads shall include but not be limited to permanent loads, live loads, water loads, construction loads, wind loads, ice loads, earthquake effects, earth pressure, vehicular collision force, force effects due to superimposed deformations, friction forces and vessel collision forces. These loads shall be in accordance with Section 3 of the Governing Specifications, unless specified otherwise within this document.

The Owner's decisions on various design criteria are listed herein.

3.1.4.1.1 Permanent Loads

Permanent loads shall include dead loads due to the weight of all structural components including future wearing surface, earth surcharge (as applicable) and horizontal earth pressure.

The Designer shall use a load of 15 PSF for permanent deck forms. When girder or beam spacing 14 feet or greater are utilized, the designer shall determine if the 15 PSF for permanent deck forms needs to be increased. All structures shall be designed for a future wearing surface of 25 PSF. Unless a more refined analysis is performed to calculate active earth pressure, the Designer shall use a minimum of 40 PCF for equivalent fluid pressure (see AASHTO 3.11.5).

3.1.4.1.2 Live Loads

All structures shall be designed for the HL-93 live load. Fatigue load frequency, $ADTT_{SL}$ (number of trucks per day in one direction in a single lane over the design life-75 years), shall be provided to the Designer by the Bridge Project Manager. Otherwise, a factor, provided by the Bridge Project Manager, shall be used to reduce the ADTT (number of trucks per day in one direction averaged over the design life-75 years) to a single lane.

The dynamic load allowance may be reduced for components other than joints, if justified by sufficient evidence, in accordance with the provisions of AASHTO 4.7.2.1, Vehicle-Induced Vibrations). Approval by the WVDOH is required. The dynamic load allowance can be reduced by 50% for timber bridges and wood components of bridges.

3.1.4.1.3 Vehicular Collision Force

The Designer's attention is drawn to the vehicular collision force requirement of the Governing Specifications. Exceptions to this requirement are when the structure is protected by an embankment, a ground-mounted 54 IN high barrier passing TL-5 test level located within 10 FT of the structure or a 42 IN high barrier passing TL-5A test level located more that 10 FT from the component. If there is no protection for any component within 30 FT of the edge of lane, or within 50 FT to the centerline of a railway track, the component shall be designed with a 400 KIP equivalent static force acting 4 FT above the ground.

3.1.4.1.4 Ice and Snow Loads

Bridge components subject to ice forces shall be designed for these conditions:

- Q_{10} elevation
- 32 KSF ice load
- 6 IN ice thickness
- If Q_{50} > 50,000 CFS, a study to determine the ice forces shall be performed

No special snow loads are required on bridges.

3.1.4.1.5 Earthquake Effects

All bridges in West Virginia are assigned Seismic Performance Zone 1. The Owner shall classify a bridge's importance category for seismic design. These classifications shall be based on the following:

- A bridge may be classified as "critical" at the direction of the Director of Engineering Division. A "critical" bridge shall be designed based on a 2500-year return period event.
- All National Highway System bridges are classified as "essential" unless a direct road detour is near the bridge. An "essential" bridge shall be designed based on a 475-year return period event.
- All other bridges shall be designed based on a 50-year return period event.

3.1.4.1.6 Force Effects due to Temperature

For force effects due to temperature change, the temperature range for bridges designed in West Virginia, shall be as follows:

- Steel or Aluminum -30° to 120° F
- Concrete 0° to 80° F
- Wood 0° to 75° F

3.1.4.1.7 Vessel Collision Force

Structures subject to vessel collisions in navigable waterways shall be designed based on "regular" criteria except at the direction of the Director of Engineering Division.

If barge traffic exists or could exist on a river, as determined by the Bridge Project Manager, a jumbo 3 x 5 barge will be used for collision loads unless otherwise directed.

For further information on vessel collisions, please refer to the AASHTO *Guide Specification and Commentary for Vessel Collision Design of Highway Bridges*.

3.1.4.1.8 Construction Loading

Construction loading shall be in accordance with the Governing Specifications. This loading shall include, but not be limited to, the erection and handling of girders and the effects of deck casting.

3.1.4.2 Limit States and Load Factors

Bridges shall be designed for specified limit states as described in AASHTO 1.3. Each component and connection of the structure shall satisfy the following equation for all limit states:

$$\sum \eta_i \gamma_i Q_i \leq \varphi R_n$$

Where:

η_i	=	The load modifier factor is a function of ductility factor η_D, redundancy factor η_R and importance factor η_I
γ_i	=	load factor from Table 3.4.1.1 of the Governing Specifications
Q_i	=	force effect determined from structural analysis
R_n	=	nominal resistance determined per the Governing Specifications
φ	=	resistance factor determined per the Governing Specifications

The ductility factor η_D, redundancy factor η_R and importance factor η_I shall be determined as follows:

- Ductility factor η_D = 1.0 for all structures. Non-ductile components and connections shall not be used.
- Redundancy factor η_R = 1.0, except for components and connections that are found to be fracture critical, use η_R = 1.05. Where feasible, the Designer is encouraged to design alternate load paths for all members.
- Importance factor η_I.
  - η_I = 0.95 for bridges that meet ALL of the following criteria:
    - Length less than 50 FT.
    - Design ADT less than 500.
    - Detour less than 10 miles or capability of erecting a temporary crossing in less than 2 days.

- η_I = 1.05 for bridges that meet ANY of the following criteria:
  - Total bridge construction cost that exceeds 20 million dollars.
  - Design ADT greater than 50,000.
  - Detour length greater than 50 miles.
- η_I = 1.00 for all other bridges.

For new bridge design, the Strength II (evaluation permit vehicle) load case is not required.

3.1.4.3 Live Load Distribution Factors

For preliminary design, live load distribution factors may be developed using approximate hand calculations based on averages. However, for final design, live load distribution factors shall be calculated per the Governing Specifications, using computer software that will take into account variability in span lengths, section properties, etc.

When the line supports are skewed and the difference between skew angles of two adjacent lines of support does not exceed 10°, the bending moments shall be reduced in accordance with AASHTO Table 4.6.2.2.2e-1.

A table of live load distribution factors shall be provided in the plans. The load rating calculations performed in Section 3.15 shall also utilize these live load distribution factors.

3.1.5 Materials

3.1.5.1 Concrete

- Normal weight concrete shall be used in the design of concrete superstructures and substructures.
- The mix design, curing and placement requirements shall per the Standard Specifications.
- Class K or H concrete shall be used in all bridge decks and parapets with a compressive strength of 4000 PSI.
- Concrete compressive strengths for precast beams shall be no more than 6000 PSI at release (f'_{ci}) with a final compressive strength of 8000 PSI (f'_c). Precast beams may be designed using high strength concrete with a release strength of up to 9000 PSI and a final strength of up to 10000 PSI with approval of the Director of Engineering Division.
- Class B Concrete with a compressive strength of 3000 PSI should be used for abutments, wingwalls and most piers. Class B Modified concrete with a compressive strength of 4000 PSI may be used for piers, if required for

strength. Concrete strengths greater than 4000 psi can be used subject to the approval of the Director of the Engineering Division.

3.1.5.2 Reinforcing Steel

Reinforcing steel shall be Grade 60 steel conforming to the requirements of AASHTO M 31 with a yield stress, F_y, of 60 KSI and a modulus of elasticity of 29,000 KSI.

3.1.5.3 Structural Steel

Structural steel shall be Grade 50, Grade 50W or High Performance Steel (HPS) Grade 50W or 70W conforming to the requirements of the AASHTO M270. The use of Grade 36 steel is generally limited to miscellaneous components.

3.1.5.4 Prestressing Steel

Prestressing steel shall conform to the following specifications:

- Strand tendons shall conform to AASHTO M203 Grade 270, low relaxation
  - Ultimate strength of prestressing steel (f_{pu}) 270 KSI
  - Yield stress (f_{py}) may be taken as $0.9f_{pu}$ 243 KSI
  - Apparent modulus of elasticity 28,500 KSI
- Bar tendons (high strength threaded bars) shall conform to AASHTO M275 Grade 150
  - Ultimate strength of bar (f_{pu}) 150 KSI
  - Yield stress (f_{py}) may be taken as 0.8fpu 120 KSI
  - Modulus of elasticity 30,000 KSI

Stress-Relieved strand tendons conforming to AASHTO M203 may be specified with the approval of the Bridge Project Manager.

3.1.6 Curved Superstructure Design Criteria

The effects of curvature in determining primary bending moments may be neglected on open cross-sections whose radius is such that the central angle subtended by the span is less than the following:

Number of Beams	Angle for One Span	Angle for 2 or more Spans
2	2°	3°
3 or 4	3°	4°
5 or more	4°	5°

Table 3.1.6

When these thresholds are exceeded, specialty computer programs (Grid or Finite Element) shall be used.

Curved bridges shall be evaluated for construction during the design process. The evaluation shall consider erection and handling of the girders, the effects of deck casting and the calculation of camber; properly accounting for deflection due to primary bending and torsion.

Hybrid sections are not allowed for curved girders.

3.2 DECKS

3.2.1 Design of Concrete Deck Slabs

Class K or H concrete shall be used in all bridge decks and barriers conforming to Section 3.1.5.1. The bridge deck width shall not be less than that of the approach roadway section (see DD-601).

The Empirical Design Method for the design of concrete deck slabs (AASHTO 9.7.2) shall be used, provided all required design conditions are met (AASHTO 9.7.2.4). If the Empirical Design Method is not applicable, then the deck shall be designed using the Traditional Method (AASHTO 9.7.3).

The following information is for monolithic concrete bridge decks:

- The minimum allowable thickness is 8.0 IN,
- 1.0 IN clearance at the bottom of the slab,
- 2.5 IN clearance at the top of the slab, and
- 2.0 IN clearance elsewhere.

The following information is for bridge decks utilizing a specialized concrete overlay (SCO):

- The minimum allowable thickness is 8.5 IN,
- 2 IN composite SCO,
- 1.0 IN clearance at the bottom of the slab,
- 3.0 IN clearance at the top of the slab, and
- 2.0 IN clearance elsewhere.

The top ¼ IN of slab is to be considered a wearing course and shall not be included as part of the structural capacity of slab.

The deck haunch shall be vertical from the flange tips.

For bridges with a skew angle of 25° or less, the transverse reinforcement may be placed parallel to the skew where economy warrants; otherwise it shall be placed perpendicular to the bridge centerline. For bridge decks skewed greater than 25°, additional reinforcement shall be added in the end zones of the deck (AASHTO 9.7.2.5).

Concrete Appurtenances (curbs, barriers, sidewalks, etc) shall be made structurally continuous.

Typical deck details including end zone reinforcement placement are available from the WVDOH.

3.2.1.1 Deck Overhangs

The reinforcing for deck overhangs is not included in the Empirical Design Method. The WVDOH has prepared deck overhang design drawings for our standard barriers referenced in Section 3.2.2. As long as the deck overhang meets the dimensional criteria shown in these drawings, the reinforcement is adequate and no further design work will be required. If the deck overhang does not meet this criteria or an alternate crash tested barrier is employed, the overhang shall be designed for all loads including the railing impact loads of AASHTO 9.7.1.5 and the provisions of AASHTO 9.7.2 and detailed to be compatible with the empirical deck system. For bridges with structurally continuous concrete barriers, the minimum total overhang width shall be 3.0 times the depth of the deck, measured from the center of the exterior girder (AASHTO 9.7.2.4). The maximum total overhang width shall be the smaller of 0.625 times the girder spacing and 6 FT.

Plan notes shall be added requiring the contractor to ensure that precautions have been taken to prevent permanent lateral deformations of the exterior girder, caused by overhang brackets used during the deck pouring operation (See Section 615.2.2 of the WVDOH Standard Specifications).

3.2.1.2 Removable Forms

Removable formwork on interior bays is not permitted without permission from the Director of Engineering Division.

When removable forms are to be used, approval of the forming plan will not be required, except when the slab overhang at the fascia girder is greater than 2 FT from the edge of the flange. If this occurs, see Appendix A for the plan note to include in the General Notes sheet.

3.2.1.3 Permanent Metal Deck Forms

All bridge decks shall be detailed with permanent metal deck forms, unless the Director of Engineering Division approves another type.

[This page left intentionally blank]

When corrugated stay-in-place forms are used, the design depth is taken as the minimum concrete thickness. Fill corrugations with concrete. The use of foam in the corrugations of stay-in-place formwork is prohibited. Deck forms shall be mechanically tied at common edges and fastened to their support. No welding of steel formwork is permitted. Steel formwork shall not be considered composite with the concrete slab.

3.2.1.4 Deck Protection Criteria

All reinforcing in the slab, barriers, medians, curbs and sidewalks shall be epoxy coated, except when alternate protection systems are approved by the Director of Engineering Division.

A dual protection deck system shall be provided for all concrete bridge decks on projects meeting either of the following criteria:

- Design ADT greater than 3500 vehicles per day (VPD)
- National Highway System (NHS) bridge

The dual protection shall be obtained by utilizing a Class H full depth concrete deck on all bridges with a maximum span length less than or equal to 350 FT.

All bridges with spans greater than 350 FT shall utilize a deck system with a specialized concrete overlay in combination with a Class K concrete deck. The overlay is placed after most of the dead load deflections have taken place, thus providing better control over the final elevation of the concrete deck.

To provide necessary information to field personnel in constructing specialized concrete decks and to help prevent rideability problems, Bridge Designers are required to:

- Provide cambers and deflections for stringers and floorbeams in the contract documents.
- Place an overlay on the deck whereby the overlay thickness is part of the 3.0 IN minimum clearance over the reinforcing steel bars.

3.2.2 Barriers

All new or replacement bridge barriers shall meet or exceed the following criteria:

- TL-3, when any of the following conditions apply:
  - National Highway System (NHS) Bridge
  - Design speed greater than 45 MPH
  - Design ADT greater than 3500 VPD
  - Deck type is concrete slab on girders
- TL-2, for all other bridges

- Design speed must be less than 45 MPH to use a TL-2 barrier

The 32 IN Type F barrier is the standard barrier for all new and replacement projects, utilizing a TL-3 barrier. The Designer should note that the 32 IN Type F barrier meets TL-4 requirements. As with all railings, the attachment and supporting elements shall be designed to exceed the strength capacity of the barrier, per AASHTO Section 13. The 42 IN barrier may be specified for special projects based on geometric constraints. If there is a bicycle path adjacent to the barrier, the overall barrier height shall be 54 IN (including railing). Details for these barriers can be obtained from the WVDOH.

Sidewalk barriers shall be designed in accordance with AASHTO Section 13, Railings and Section 2.3.2.2.2. Sidewalk barriers subject to vehicular collision shall meet crash test requirements (AASHTO 13.11.1).

The barrier is constructed without vertical construction joints but is vertically scored for control joints. Longitudinal reinforcement shall be continuous.

The Type F barrier transition and guardrail attachment details can be obtained from the WVDOH. This transition shall occur outside the limits of the bridge, typically on the wingwalls or approach slabs.

3.2.2.1 Continuous Barriers for Deflection Control of Bridges

Generally, for short to medium span bridges, the AASHTO suggested limits for live load deflection may not govern the design of the main structural members. However, for medium to long span bridges and bridges with HPS 70W steel girders, serviceability criteria, such as live load deflection, become increasingly significant when proportioning the main members.

These provisions are also applicable to bridges designed in accordance with LFD. The following live load provisions will supersede the live load provisions of Article 2.5.2.6.2 when designing bridges in accordance with the AASHTO Standard Specifications for Highway Bridges:

- Continuous composite barriers and other structural appurtenances shall be used in the service and fatigue limit states. They shall not be utilized for other load cases without the approval of the Director of Engineering Division.
- To ensure satisfactory performance for strength and serviceably criteria, deflection control of bridges will be evaluated during design in accordance with AASHTO 2.5.2.6.2. The principles suggested by AASHTO 2.5.2.6.2 for deflection control and evaluation will be implemented in the design of bridges. Particular emphasis is placed on considering the entire bridge cross-section, including the entire width of the roadway and the structurally continuous portions of railings, sidewalks and median barriers, as effective for stiffness of compositely designed structures.

- The live load portion of Load Group III of Table 3.22.1A shall be used, including impact.
- The live load will be the HS25, 125% of HS20 as specified in Article 3.7.6, applied as specified in Article 3.11 for maximum positive moment.
- The provisions for reduction in load intensity of Article 3.12 apply.

3.2.3 Construction Sequences

A deck placement sequence shall be provided on the bridge plans for all multiple span bridges with a cast in place concrete deck (see Figure 3.2.3). The purpose of the placement sequence is to reduce deck cracking over the piers. In general, the recommended deck placement sequence shall specify that all positive moment regions of the deck shall be placed first. The negative moment areas shall not be placed until the positive moment regions have reached the minimum strength required in the Standard Specifications. The positive moment region pours shall be limited to a length that can be completed prior to the initial setting of the concrete. If special structural situations warrant, consideration may be given to an alternate deck placement sequence. The bridge superstructure shall be analyzed for the proposed deck placement sequence.

Under some circumstances, the deck may be placed in one continuous pour. These circumstances include, but are not limited to, single span bridges or multi-span bridges of a length that can be placed in one casting operation. On multi-span bridges, the initially placed concrete must remain plastic during the entire casting operation.

The Designer shall be aware of, and take into consideration, the proximity of concrete facilities, pour volumes and quantity of concrete a contractor can place when determining the deck placement sequence.

3.2.4 Deck Drainage

Provide sufficient inlets to drain a 2-year design discharge from the highway or bridge surface. For roadways designed for speeds of 40 mph or greater, spread of the flow on a bridge deck or curbed section of pavement is generally limited to 5 feet or the shoulder width, whichever is greater. If the design speed is less than 40 mph, spread is generally limited to 5 feet, or the shoulder width plus 2 feet into the traveled way, whichever is greater. If a parking lane is present, then the spread will be limited to 8 feet.

FHWA publication *Design of Bridge Deck Drainage*: Hydraulic Engineering Circular No. 21 shall be utilized for deck drainage design methodology. Deck drains shall be placed, as required, based on the hydraulic computations for the subject bridge (AASHTO 2.6.6.2). The design storm for deck drainage shall be as described in the preceding paragraph. Deck drainage systems shall be designed and sized to efficiently and quickly remove surface water from bridge decks and direct it away from bridge superstructure and substructure elements.

The drainage system shall be designed to be accessible for cleaning.

[This page left intentionally blank]

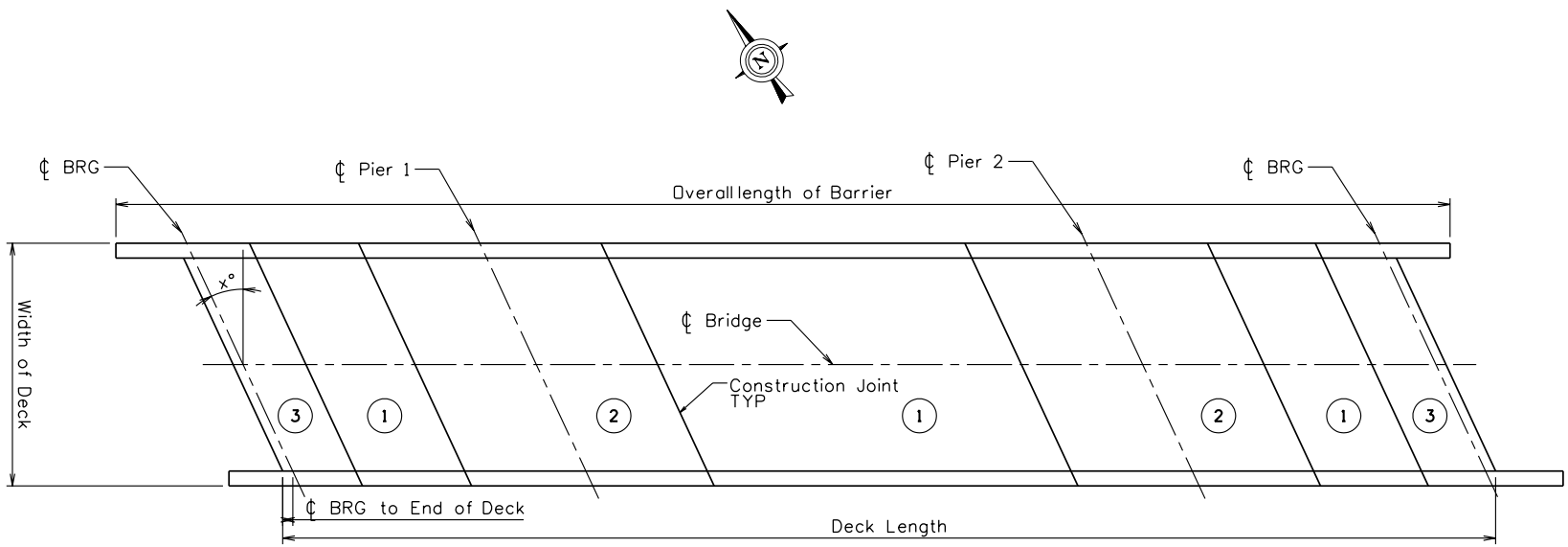

DECK PLAN VIEW

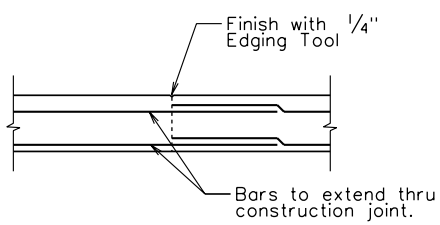

TRANSVERSE
CONSTRUCTION JOINT

Notes:

- Pours labeled as (1) may be placed simultaneously.
- Pours labeled as (2) may be placed simultaneously following set of (1) pours per the standard specifications.
- Pours labeled as (3) must be placed following pours (1) and (2).
- A general deck placement sequence is shown. (See Section 3.2.3)

Figure 3.2.3

All components of the deck drainage system shall be of similar color to their adjacent bridge component. Unpainted galvanized components are acceptable adjacent to concrete superstructures and substructures.

Steel components of bridge drain systems shall be galvanized except as noted. Galvanized components will include but not be limited to: scuppers, grates, drain pipes, pipe connectors, clamps, bolts, nuts and washers.

Galvanizing will be specified to be hot dipped galvanizing in accordance with AASHTO Specification M 111 or M 232 as appropriate.

Fiberglass deck drainage systems may be used with permission from the Bridge Project Manager. Fiberglass components shall also be of similar color to their adjacent bridge component.

On Interstate bridges where pedestrian and bicycle traffic are prohibited, drainage grates shall provide openings parallel to the roadway centerline. Grates shall be designed and detailed to be bicycle and pedestrian safe on all other facilities where drains are required and where pedestrian and bicycle traffic are not prohibited.

3.2.5 Deck Surface Preparation

All concrete bridge decks shall be given a groove finish as described in Section 601.11.4 of the Standard Specifications.

3.2.6 Steel Grid Decks

Open steel grid bridge decks are not permitted without prior approval from the Director of Engineering Division. However, open grid may be used, with approval, in such situations as temporary detours, in emergencies where opening the structure to traffic as quickly as possible is of utmost importance, or where the live load capacity of a structure is severely reduced by the weight of the concrete fill. Open grid decks shall be connected to their supporting structures by mechanical fastening.

A steel grid deck may be completely or partially filled with concrete (AASHTO 9.8.2.1). For completely filled decks, provide a 1.5 IN thick structural concrete overfill. Filled and partially filled grid decks shall be connected to their supporting structures through shear connectors or by welding, to transfer shear forces between the adjacent surfaces.

A reinforced concrete slab may be placed on top of an open steel grid deck. Composite action shall be provided between the slab and grid deck, and the grid deck and supporting structure, using shear connectors or other suitable means. AASHTO Section 5, Concrete Structures, shall govern the design of the concrete slab. One layer of reinforcement in each principal direction may be used (AASHTO 9.8.2.4.2).

3.2.7 Timber Decks

Glued laminated decks shall normally be used when timber decks are utilized. For panels parallel to traffic, interconnection of panels shall be made with transverse stiffener beams connected to the underside of the glued laminated deck at a spacing not to exceed 8 FT. For panels perpendicular to traffic, interconnection of panels may be made with mechanical fasteners, splines, dowels or stiffener beams.

Nail laminated decks may be utilized on annual plan projects or Category 6 bridges when approved by the Bridge Project Manager.

For decks skewed less than 25°, transverse laminations may be placed parallel to the skew. Otherwise, the transverse laminations shall be placed perpendicular to the supporting members.

Deck panels shall be attached to their supporting component as specified in AASHTO 9.9.4.2. Non-interconnected decks shall only be used on secondary rural roads.

Timber decks shall be provided with a wearing surface (AASHTO 9.9.8).

3.2.8 Sidewalks

The curb height for raised sidewalks on a bridge should be no more than 8 IN. If a barrier curb is required, the curb height should not be less than 6 IN. If the curb height on the bridge differs from the adjacent roadway, it shall be uniformly transitioned over a distance greater than or equal to 20 times the change in height (AASHTO 13.11.2). This transition shall occur outside the bridge limits, normally on the approach slab.

3.3 STEEL SUPERSTRUCTURES

The Designer is not limited to the span-to-depth ratios provided by the Governing Specifications. The design of steel bridges will be based on economics and aesthetics.

The load carrying capacity of exterior beams shall not be less than the load carrying capacity of interior beams.

3.3.1 Material Properties

3.3.1.1 Specifying Grade, Toughness Level and Special Provisions

Typical steel grades considered for fabrication of bridges are as specified by the Governing Specifications. Grade 100 and HPS 100W are not permitted for bridge structures unless approved by the Director of Engineering Division.

3.3.1.1.1 Grade

The specified grade(s) of steel used in the design will be as determined through performance requirements, availability and initial and long-term cost. Comparative studies will be completed during the TS&L study. Results and recommendations will be provided in a clear and concise format, providing sufficient justification for the recommendations made.

3.3.1.1.2 Toughness

Fracture toughness requirements for all main components and connections sustaining tensile forces shall be identified on the contract drawings. Toughness requirements shall conform to Zone 2 Charpy V-Notch impact test requirements of AASHTO M 270.

3.3.1.1.3 Special Provisions

Special provisions shall be prepared for materials, fabrication or construction not specifically addressed in the Governing Specifications.

3.3.1.2 Limitations of Grade Selection

The use of high-strength steel is desirable when strength is the major design criterion. Historically, when deflection or other service criteria governed, the use of Grade 36 steel was preferred. However, the cost differential between high-strength Grade 50 steel and Grade 36 steel has narrowed, or may even be negligible. Therefore, the added strength of Grade 50 steel is worth the minimal cost premium.

The use of HPS 70W steel shall be considered in the design of all structures. Hybrid girders (configured as described below) are generally most economical for tangent structures. This type of girder utilizes different grades of steel in the beam cross section. Generally, the use of HPS 70W steel in the top and bottom flanges of the negative flexure regions and the bottom flange of the positive moment regions with Grade 50 steel in the top flange of the positive moment regions and in the web throughout is considered to be

the most economical design. Other configurations may be studied at the request of the Bridge Project Manager.

Hybrid sections are not allowed for curved girders. Frequently, for curved girders the use of HPS 70W steel in negative flexure regions is used in conjunction with Grade 50 steel in positive flexure regions.

The use of uncoated high-strength weathering steel provides significant initial and long-term cost savings and will be considered at TS&L for all projects meeting the requirements of Section 3.3.9, Weathering Steel.

The use of weathering steel requires unique specification requirements for fabrication, painting and construction techniques. These unique requirements are contained in a set of standard plan notes included in Appendix A, Miscellaneous Plan Notes. The notes were developed to apply to all structure types, including integral bridges, and will require slight modification to suit individual project conditions and designs. Designers must verify that these notes are applicable to their project and do not conflict with other plan notes.

When the use of coated or painted steel structures are specified, see Appendix D for coating specifications.

3.3.2 Design Guidelines

The following subsections address design guidelines that shall be considered during the analysis and detailing of steel bridge structures, as appropriate.

3.3.2.1 Web Plates

The minimum web thickness for plate girders is 7⁄16 IN. Increment the web thickness by 1⁄16 IN minimum. It is generally more economical to maintain a constant web thickness throughout a project. However, web thickness may be varied at field splices, or less desirable, at shop splices. Design partially stiffened webs, defined as webs stiffened near support locations with positive flexure regions largely unstiffened. The Designer shall consult with steel fabricators to determine the most economical location of a splice, and whether or not changing the web thickness will offset the added cost of the additional web thickness.

For long-span bridges, evaluate haunched webs versus constant depth webs. Typically, haunched webs should be fabricated using a straight taper. Parabolic haunches will be considered for aesthetic reasons with approval of the WVDOH. The Designer shall consult with a steel fabricator to determine the additional cost of fabrication.

3.3.2.1.1 Transverse Intermediate Stiffeners

Transverse intermediate stiffeners are used to increase the shear-buckling strength of girders with slender webs as defined by the Governing Specifications. "Transverse stiffeners shall consist of plates or angles welded or bolted to either one or both sides of the web" (AASHTO 6.10.8.1.1).

For fascia girders, design intermediate transverse stiffeners on the interior side of the web only. For interior girders, intermediate transverse stiffeners may be paired at the same location on opposite sides of the web. See Figure 3.3.2.1.1 for details of transverse stiffeners.

3.3.2.1.2 Diaphragm Connection Plates

Connection plates serve to attach diaphragms and cross frames to the girders. Connection plates will be designed to meet the criteria of transverse stiffeners as prescribed in the Governing Specifications and as follows:

- Connection plate width will be sized to suit the connection details.
- Connection plates will be connected to both the top and bottom flanges to prevent distortion-induced fatigue cracking.
- In the absence of more detailed loading information, for tangent non-skewed structures, the attachment of the connection plate to the girder will be designed for a transverse force of 20 KIPS.

See Figures 3.3.2.1.2A and 3.3.2.1.2B for details of connection plates.

3.3.2.1.3 Bearing Stiffeners

Bearing stiffeners are used to resist bearing reactions and other concentrated loads, either in the final state or during construction. Bearing stiffeners are to be placed on the web of girders at all bearing locations and other points of concentrated loads. "Bearing stiffeners shall consist of one or more plates or angles welded or bolted to both sides of the web. The connection to the web shall be designed to transmit the full bearing force due to the factored loads" (AASHTO 6.10.8.2.1). The plates, or outstanding legs of the angles, should extend as close as practical to the outer edges of the bottom flange. The stiffeners shall be finished to be tight fit against the bottom flange and fillet welded. See Figures 3.3.2.1.2A and 3.3.2.1.2B for details of bearing stiffeners.

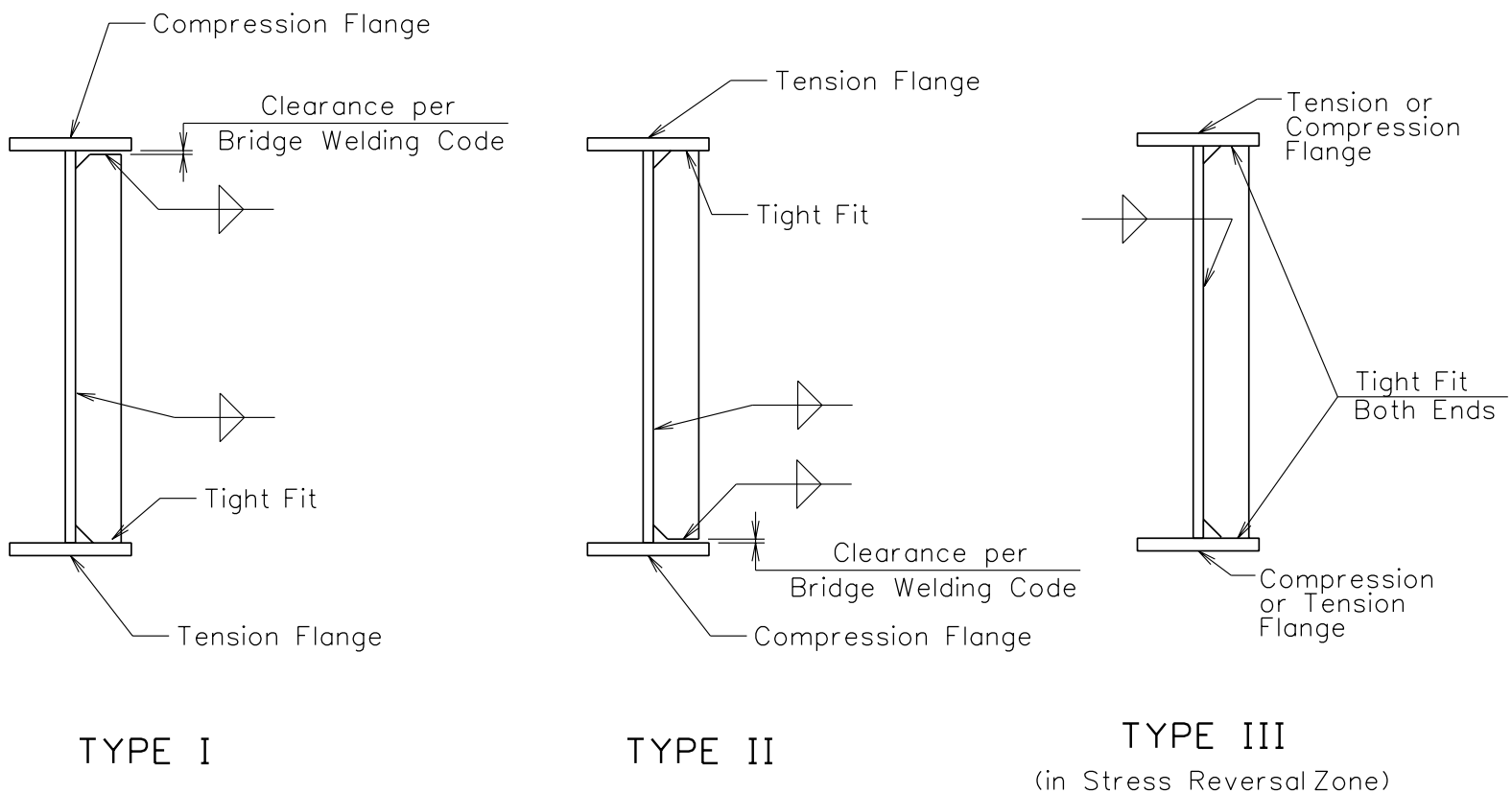

INTERMEDIATE STIFFENER DETAILS

Details from SCEF Mid-Atlantic States.

Note:
See Figure 3.3.3.1.2A for notes.

Figure 3.3.2.1.1

STIFFENER DETAILS

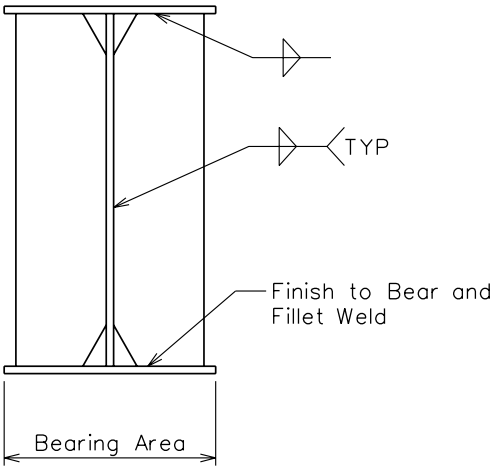

BEARING STIFFENER

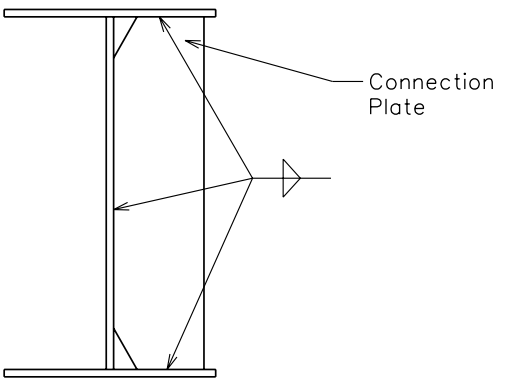

CONNECTION PLATE

Notes:
1. Stiffener size must be shown on plans.
2. Fillet weld size shall be shown on plans unless minimum weld size as per AASHTO/AWS D1.5 is to be used.
3. If a bearing stiffener is used as a connection plate for cross frames, fillet welds are required.
4. When longitudinal stiffeners are required, place all transverse stiffeners on one side of the web and place the longitudinal stiffener on the opposite side.
5. Detail is simialr for paired stiffeners.

Details from SCEF Mid-Atlantic States.

Figure 3.3.2.1.2A

STIFFENER DETAILS

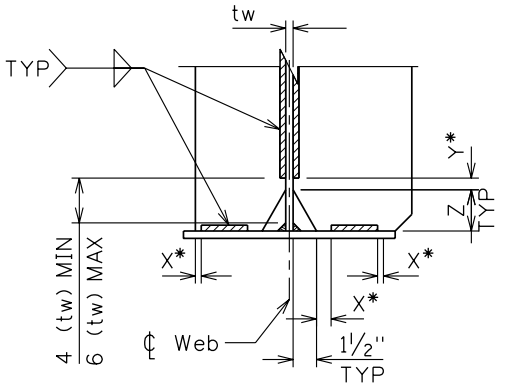

X = ¼" ± ⅛"
Y = ½" ± ¼"
Z — 2½" for ½" web
3" for 9/16" web
4" for ¾" web
* 0" for groove weld

DETAIL AT END OF STIFFENER OR CONNECTION PLATE

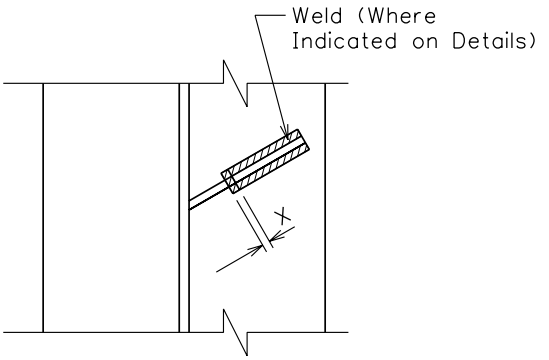

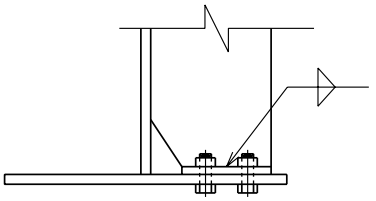

ALTERNATE DETAIL AT TENSION FLANGE WHERE STRESS RANGE EXCEEDS CATEGORY C

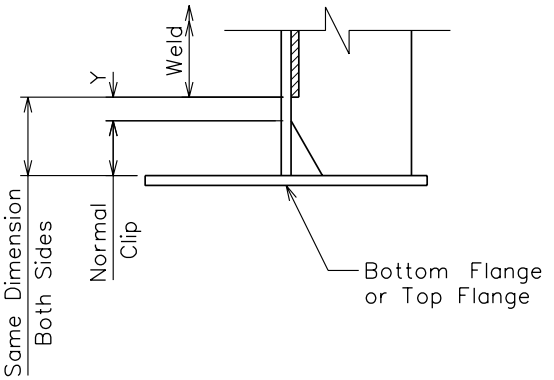

STIFFENER WELDING DETAIL

For Skewed Stiffeners

Details from SCEF Mid-Atlantic States.

Figure 3.3.2.1.2B

3.3.2.1.4 Auxiliary Stiffeners

Auxiliary stiffeners are partial depth bearing stiffeners used at bearing locations to reinforce the girder web and ensure full bearing of the girder over the bearing device. Auxiliary stiffeners are positioned and sized to resist a portion of the total reaction based on the projected area of the bearing device. The resistance of the auxiliary stiffeners is disregarded when designing bearing stiffeners, defined in 3.3.2.1.3, for the full bearing reaction in accordance with the Governing Specifications. The length and connection of auxiliary stiffeners to the girder web will be sufficient to transmit the design force into the girder web. See Figure 3.3.2.1.4 for details of auxiliary stiffeners.

3.3.2.1.5 Longitudinal Stiffeners

Longitudinal stiffeners increase the resistance to flexural buckling of the girder web. Longitudinal stiffeners should consist of a welded plate or bolted angle positioned longitudinally on one side of the web. Longitudinal stiffeners are not permitted without the permission of the Director of Engineering Division.

3.3.2.1.6 Jacking Stiffeners

Jacking stiffeners are installed at future jacking locations to reinforce the girder web. The design of jacking stiffeners for new structures shall be in accordance with the AASHTO provisions for bearing stiffeners. For rehabilitation projects, the detail length and connection of jacking stiffeners to the girder web will be at a minimum sufficient to transmit the design jacking force into the web.

3.3.2.2 Flange Plates

The minimum flange plate size is ¾ IN thick by 10 IN wide. Refer to the Governing Specifications for minimum plate sizes with respect to handling, transportation and erection considerations.

Typically, no more than one flange plate thickness transition is economical between interior support locations and field splices. For some long-span girders, bottom flange transitions may prove economical in positive flexure regions. All transitions must be evaluated for economy during the design process. Roughly, 700 LBS of steel must be saved to offset the cost of a transition butt weld. The Designer shall consult with fabricators to gain up-to-date cost factors for design.

STIFFENER DETAILS

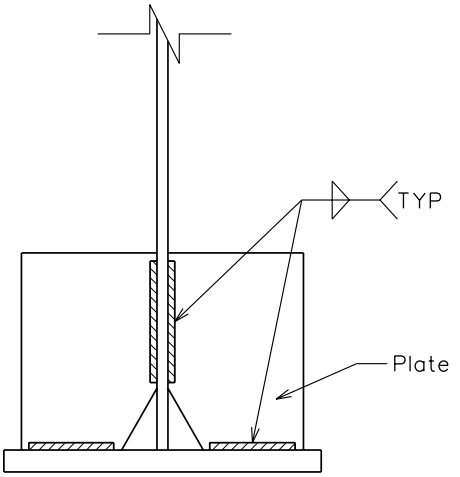

AUXILIARY
BEARING STIFFENER

Note:
See Figure 3.3.3.1.2A for notes.
See Figure 3.3.3.1.2B for dimensions

Figure 3.3.2.1.4

Items to consider for the design of flange plates:

- Maintain constant-width flanges within field sections.
- Group flange sizes during design and locate flange transitions for adjacent girders at equal distance from support locations to facilitate fabrication of multiple girders.
- Minimize specifying plates of different thickness in girder details. Whenever possible, use common plate sizes throughout the girder.
- Do not reduce the cross-sectional area at flange transitions by more than one-half the area of the larger flange plate.
- Avoid bottom flange lateral bracing for wind whenever possible.
- Consider making the top flange width the same for entire length of structure to reduce deck framing costs.

3.3.2.3 Erection Requirements

The Designer shall provide the anticipated erection scheme, which is to be consistent with the project's permitting.

See Appendix A for Erection Plan Notes.

3.3.3 Fatigue

Fatigue shall be considered in the design of a new structure, reconstruction or major rehabilitation of an existing structure. See Section 3.1.4.1.2 Live Loads for fatigue load frequency.

Structural details identified as Detail Category D, E, or E' by AASHTO are not acceptable for the design of fatigue susceptible regions of new structures.

3.3.4 Fracture Critical

As recommended by the Governing Specifications, the design of new structures will employ continuity or redundancy to provide one or more alternate load paths. Where the use of fracture critical members (FCM) is unavoidable and approved by the WVDOH, the FCM should be clearly designated on the contract drawings with the appropriate tension zones indicated and shall be fabricated according to Section 12 of AASHTO/AWS D1.5M/D1.5: 2002, *Bridge Welding Code*, (Bridge Welding Code).

3.3.5 Diaphragms, Cross Frames and Lateral Bracing

Cost-effective design of steel bridges involves particular attention to the design of the details. Cross frames and diaphragms are a significant example. Cross frames and diaphragms typically account for a small percentage of the total structure weight of steel. Nevertheless, due to labor-intensive fabrication, they usually are a significant percentage of the total erected steel cost. The need for, and location of cross frames and diaphragms shall be carefully evaluated. Cross frame spacing is to be established by rational analysis for all stages of construction and the final condition. Diaphragms, in lieu of cross frames, shall be used on beams less than 36 IN.

Cross frames and diaphragms shall be oriented perpendicular to the girder webs (radial for curved bridges). For regions near skewed supports, cross frame forces can become large due to significant differential deflection of adjacent girders. The Designer shall investigate the elimination of specific cross frames near skewed supports to relieve "stiffness" of the framing as needed to reduce cross frame forces.

In order to mitigate distortion and fatigue-prone details on heavily skewed bridges (30º or more), slot the diaphragm or cross frame connection holes. These connections shall not be completely tightened until all of the superstructure concrete is placed.

For analysis using refined methods, the cross frame members will be included in the structural model and subsequently be designed for the forces generated by the analysis. The force effects considered in design shall at a minimum include dead load, live load, wind load and, as required, thermal forces. When approximate methods of analysis are used, dead load, live load and thermal forces cannot be easily obtained. The cross frame members will be designed, at a minimum, for wind loading and slenderness requirements as specified by AASHTO. When cross frames are designed members, they then become subject to the same fracture toughness testing as the main members. As discussed previously, cross frame forces near the supports of skewed bridges can be significant in magnitude. Careful evaluation is needed regardless of the analysis method used.

Cross frames may be K-type or X-type. K-type cross frames will be used when the ratio of the girder spacing to the girder depth is greater than 1.5:1. K-type cross frames will be oriented with diagonals connecting to the mid-point of the bottom strut. At support locations, K-type diaphragms will be used except for the purposes of jacking where solid plate diaphragms are needed. K-type diaphragms at end supports will be oriented with the diagonals attached to the mid-point of the top strut. Generally, for aspect ratios less than 1.5:1, X-type cross frames should be considered. Top struts and/or bottom struts in either type may be eliminated only when accompanied by an analysis and plan showing that adequate flange support will be provided during construction.

Member selection is based upon the design forces. For highly loaded cross frame members in compression, WT sections connected through the flange usually provide an efficient section, otherwise use single angles. The designer should consult with fabricators prior to the selection of member types to avoid specifying shapes not readily

available. Since significant premiums are levied on "non-stocked" shapes, the least weight shapes are not necessarily the least costly.

The AASHTO Standard Specifications (LFD) do not accurately address the behavior of single angles subjected to combined flexure and compression. When designing using the LRFD Method, the Governing Specifications (commentary to Article 6.12.2.2.4b) refers designers to the AISC *Specification for Load and Resistance Factor Design of Single Angle Members*, contained in the AISC *Load and Resistance Factor Design Manual of Steel Construction,* (AISC LRFD). Therefore, design of single angle members will be in accordance with the AISC LRFD Specifications.

Permanent steel end diaphragms or cross frames shall not be used in conjunction with integral or semi-integral abutments that utilize permanent concrete end diaphragms. Temporary bracing may be required to ensure a stable system while the deck slab is placed.

The need for lateral bracing shall be investigated for all stages of the assumed construction sequence. Girder flanges attached to the decks with sufficient rigidity to brace the flange will not require lateral bracing. The wind load stresses in steel girders can be reduced by either changing the flange size, reducing the diaphragm or cross-frame spacing or by adding lateral bracing in the exterior bays. See Section 6.7.4 of the Governing Specifications for additional information.

3.3.6 Connection Design

Design of connections shall be in accordance with the Governing Specifications. The connection shall be designed for moment, shear and tension as applicable. Refer to the Governing Specifications for loads and load combinations. Connections should be detailed as simple as practical, using a minimum number of fasteners and/or weld length.

3.3.6.1 Welded Connections

When designing welded connections, the following shall be considered:

- No field welding is permitted unless approved by the WVDOH.
- Use fillet welds wherever possible. The minimum fillet weld size is ¼ IN for materials up to and including ¾ IN thick, and 5⁄16 IN for materials over ¾ IN. Fillet weld sizes should generally be limited to a maximum of 5⁄16 IN in order to allow for single pass welds in fabrication.
- Minimize the fit up requirements for the connection using pre-qualified joints per Bridge Welding Code.
- Avoid the use of partial and full-penetration welds. If required, specify them as partial joint penetration (PJP) or complete joint penetration (CJP) respectively on the contract drawings to permit the Fabricator to select a least

cost pre-qualified joint for approval. PJP joints require appropriate indication of minimum effective weld throat as per design requirements.

- Unless specifically required for strength, full penetration welds should not be specified except for splicing flanges, webs, longitudinal stiffeners and any other member subjected to live load and wind load tension and flexural stresses.

3.3.6.2 Bolted Connections

When designing bolted connections, consider the following:

- Use high-strength AASHTO M 164 bolts, minimum ⅞ IN diameter. Other sizes or strengths may be used with the approval of the Bridge Project Manager.
- Bearing-type connections shall be permitted only for joints subjected to axial compression and joints on secondary/bracing members (AASHTO 6.13.2.1.2). All other bolted connections shall be designed as slip-critical connections (AASHTO 6.13.2.1.1).
- Bolt size, spacing, gage and edge distance will be in accordance with AASHTO. The Designer should refer to AISC LRFD for general detailing and the requirements for assembly of bolted connections.
- Type B faying surfaces shall be specified for slip-critical connections on new structures. Appropriate faying surfaces shall be established for rehabilitation of existing structures.
- If the design permits, eliminate gusset plates by bolting cross frame members directly to the stiffeners. If gusset plates are required, shop-weld cross frame members to the gusset plates. Field connections for cross frames shall be bolted.
- Stems of WT sections and outstanding legs of angles shall be turned in common orientation to facilitate fabrication of cross frames.

3.3.7 Non-Destructive Testing (NDT) Requirements

The Bridge Welding Code (BWC) adequately describes the types of welds (groove, fillet, etc.) that require NDT and specifies the type of NDT (radiographic, ultrasonic, magnetic particle, etc.) appropriate for the type of welds. In general, the BWC only requires NDT for welds on "main members" in the "tension and/or stress reversal" area of the structure. The Designer's responsibility is limited to assuring that the contract documents adequately describe which members are main members, and adequately identifies the tension and stress reversal areas. When curved, box beam, truss, tied arch or other complex designs are utilized, the Designer must consider the minimum weld quality requirements and develop a Special Provision which will define NDT requirements for the entire structure.

3.3.7.1 Straight Beam and Girder Bridges

In general, for these structures, the main members are the longitudinal beams and girders. Diaphragms, cross frames, bearings, expansions dams, drainage, etc. would be considered secondary members and not subject to NDT. Additional plan notes or Special Provisions are not required to identify main members. However, the Designer must assure that plan detail sheets for girder/beam elevation views adequately define the tension and stress reversal areas of the structure.

3.3.7.2 Curved or Other Complex Bridges

Complex bridges include, but are not limited to: box beam, stringer/sub-stringer with floor beams, trusses, tied arches and heavily skewed bridges. For these types of structures, the members to be considered main members are not readily obvious to all parties. Designers must add appropriate notes to define and identify the main members. All members so designated then become subject to NDT requirements. In addition, the Designer must assure that plan detail sheets adequately define the tension and stress reversal areas of the structure. Additional NDT can be specified for highly stressed areas or members, welds or members subject to high stress ranges and fatigue, or as otherwise deemed appropriate by the designer, by preparation of extensive plan notes or a Special Provision.

3.3.8 Composite Construction

Generally, composite construction shall be used for all single-span and continuous bridges. Non-composite design may be used if it results in a more economical design than composite construction, with approval of the Bridge Project Manager.

For continuous spans, the beams shall be designed for composite action in both positive and negative moment regions. 1% slab reinforcement shall be used to control flexure cracking throughout the dead load negative moment region. The Designer may elect to design for composite action only in the positive moment region with the approval of the Bridge Project Manager.

Moment redistribution shall be used where appropriate following an elastic analysis.

3.3.8.1 Limits of Composite Regions

Proportion composite sections in single spans and positive flexure regions of continuous spans such that the neutral axis of the composite section lies within the steel member. Concrete in tension will not be considered effective when calculating section properties of the composite section for strength.

In the negative flexure regions of continuous spans, only the deck slab reinforcement is considered to act composite with the girder when calculating section properties for strength.

In positive flexure regions of continuous spans, and in single spans, the deck slab is considered to act composite with the girder when calculating section properties for strength. The deck reinforcing steel may be ignored in calculating the composite section properties.

3.3.8.2 Steel Stud Shear Connectors

Use welded stud type shear connectors, minimum ⅞ IN diameter, that are sufficient to resist both horizontal and vertical movement between the deck slab and girders.

Shear connectors shall be positioned to satisfy the provisions of the Governing Specifications and are grouped such that a minimum of two studs are placed in a single transverse row across the top flange.

3.3.9 Weathering Steel

3.3.9.1 General Guidelines

Weathering steel for bridge components is available as AASHTO M 270 Grade 50W and HPS 70W in plates up to 4 IN thick, depending on the grade of steel.

Standard shapes in Grade 50W weathering steel are generally available. Availability should always be verified from fabricators/suppliers prior to being specified in design.

The use of uncoated weathering steel shall be governed by the guidelines as contained in the FHWA Technical Advisory; T 5140.22, *Uncoated Weathering Steel in Structures* dated October 3, 1989 (FHWA Technical Advisory).

3.3.9.2 Site Selection and Design Details

Uncoated weathering steel shall not be used in the following situations:

- An acidic or corrosive environment,
- Where the structure is subjected to salt water spray or frequent fog conditions,
- Over depressed roadways (less than 20 FT clearance) that create tunnel-like conditions allowing salt-laden water from the roadway surface below to be carried up to the bridge structure,

- Low under-clearance conditions where the steel is less than 10 FT over standing water and 8 FT over moving water,
- Regions where the steel is continuously wet, buried in soil or covered with vegetation,
- In structure types where accumulation of debris may be a problem, and
- Truss bridges of all types.

When weathering steel is specified, consideration shall be given to the following:

- The number of expansion joints shall be minimized or eliminated completely.
- Use of details that minimize the retention of water and debris.
- The number of bridge deck scuppers shall be minimized.
- Drip bars shall be used at support locations.
- Substructures shall be protected from staining by use of special drainage details and/or protective coatings (see Appendix D).

The Designer is responsible to assure the bridge site and design details are in accordance with the requirements of the FHWA Technical Advisory for the use of weathering steel.

The FHWA Technical Advisory places specific limitations on the macro and microenvironment for the site where the use of weathering steel is being considered. To assist Designers in evaluating the environmental issues, the WVDOH Materials Control, Soil and Testing Division has agreed to assess all potential bridge sites and determine if environmental conditions are within the guidelines established by the FHWA Technical Advisory. Designers and/or Bridge Project Managers should make written requests to the WVDOH Materials Control Division for assessment of the site prior to committing to the use of weathering steel.

3.3.10 Steel Curved Girder Bridges

At the time of printing, there are no LRFD specifications for horizontally curved girder bridges. Therefore, the design shall be in accordance with the AASHTO *Standard Specifications for Highway Bridges* (AASHTO Standard Specifications) and the *AASHTO Guide Specifications for Horizontally Curved Steel Girder Highway Bridges* (Curved Girder Specifications).

Horizontally curved I-girder bridges are specialized structures characterized by the complex interaction of girders, diaphragms and deck slab. Careful attention is required to select appropriate methods of analysis for the structure. Specifically, for curved bridges of large radius, radial supports and concentric framing; approximate methods of analysis may be used effectively. Bridges containing irregular framing arrangements, skewed supports, non-concentric framing, discontinuous girders or tight radius, require more refined methods of analysis, such as grid (2D) and finite element analysis. See Section 3.1.6, Curved Superstructure Design Criteria.

The method of analysis will be evaluated during the span arrangement study and submitted for approval in the Span Arrangement Report.

Wider flanges generally provide better performance in curved girders. Therefore, curved girders shall be proportioned using wider flange plates that also satisfy the slenderness requirements of AASHTO.

Whenever possible, cross frames and diaphragms shall be oriented radial to the centerline of the bridge. Typically, closer cross frame spacings are required for curved bridges than that required for tangent bridges. The commentary to the Curved Girder Specifications provides suggested maximum cross frame spacing for curved bridges.

Avoid the use of irregular framing arrangements whenever possible. When irregular framing arrangements are unavoidable, the following shall be considered:

- A refined analysis shall be employed.
- Complete evaluation of force effects in all girders, bracing, cross frame members, connections and details shall be performed.
- Check for and resolve any uplift condition at bearings.

If uplift conditions at the bearings are present, employ the following to mitigate the effects:

- Diaphragm and cross frame members may be left un-tightened in slotted holes until the concrete deck has been cast.
- Use tie downs or counter weights at affected support locations.

The effects of temperature change on curved bridges must be considered. Thermal movements must be allowed in directions radiating from the fixed supports. Whenever multiple fixed supports are utilized, or when guided expansion bearings are not oriented to satisfy the provisions of the Curved Girder Specifications, a thermal analysis of the superstructure is required. A thermal analysis will also be required for complex and irregular framing arrangements.

The Designer should consider the possibility of requiring full-width shop assembly for curved bridges with complex geometry. This will require special plan notes and the approval of the Bridge Project Manager.

3.4 CONCRETE SUPERSTRUCTURES

3.4.1 General

Concrete compressive strengths for precast beams shall be no more than 6000 PSI at release (f'_{ci}) with a final compressive strength of 8000 PSI (f'_c). Precast beams may be designed using high strength concrete with a release strength of up to 9000 PSI and a final strength of up to 10000 PSI with approval of the Director of Engineering Division.

AASHTO girders shall be designed utilizing straight or straight and draped prestressing strands. These strands shall be AASHTO M 203, Grade 270, 0.5 IN or 0.5 IN special, seven-wire, low-relaxation strands. For high performance concrete, 0.6 IN strands may be used for economy. Strand properties are shown in Table 3.4.1.

Diameter	Area	Ultimate Strength	Applied Prestressing
0.5 IN	0.153 IN^2	41.3 KIPS/strand	31.0 KIPS/strand
0.5 IN (Special)	0.167 IN^2	45.1 KIPS/strand	33.8 KIPS/strand
0.6 IN	0.217 IN^2	58.6 KIPS/strand	44.0 KIPS/strand

Table 3.4.1

The FHWA currently requires a strand development length of 1.6 times the AASHTO development length requirement. This development length requirement shall be used for all strand sizes and spacing. The Designer should be aware that this might affect the use of beams in the 20 to 30 FT range.

All reinforcing bars are to be tied at all intersections except where spacing is less than 12 IN in each direction; in which case, every other intersection shall be tied. Tack welding of steel reinforcing cages is not allowed. Designers shall assure that all submissions, such as shop drawings, fabrication details, erection plans, etc., do not reflect alternate fastening methods.

Prestressed girder spans shall be designed for the dead and live loads carried by the composite action of the slab and girders. Multi-span girders shall be designed as continuous for live load purposes.

In a situation where two girders of the same size require a slightly different number of strands, resulting from differences in design loadings (i.e., interior and exterior beams), use the greater number of strands. This makes fabrication easier and reduces confusion during construction.

3.4.2 Prestressed Concrete Beams

3.4.2.1 Requirements for Prestressed Beams

Stress computations resulting from the prestressing of bonded or debonded strands shall be in accordance with the Governing Specifications. In analyzing stresses or determining the required length of debonding, stresses shall be limited to the values specified in the Governing Specifications.

The use of AASHTO M 203, Grade 270, low-relaxation prestressing strands, either straight or draped strand profiles, are preferred for the design of prestressed/pretensioned concrete beams. Straight strands are preferred where practical.

Bridges with varying span lengths, skew angles, beam spacings, beam loads or other design criteria may result in very similar individual designs. The designer should consider combining similar designs into groups of common materials and strand patterns based on the following priorities:

- 28-Day compressive concrete strength (f'c)
- Strand pattern (size, number and location)
- Compressive concrete Strength at release (f'ci)
- Debonding

Grouping beam designs will help maximize casting beds and minimize variations in material and strand patterns.

In order to achieve uniformity and consistency in designing strand patterns, the following criteria may be used:

- The maximum strand pattern for precast beams shall utilize an odd number of strands per row (placing a strand on the centerline of the beam) and a minimum side cover of 3 IN, except for AASHTO Type III, V and VI beams for which strand patterns with an even number of strands per row shall be utilized.
- The actual strand pattern used for design shall be symmetrical about the vertical axis of the beam.
- In the end regions of the beam, a maximum of 25% of the strands may be debonded to satisfy the allowable stress limits, but debonded strands shall not exceed 40% of the total strands in any one row (AASHTO 5.11.4.3). In applying these percentage limitations, the following may be used:
    - Strands shall be debonded in a pattern that is symmetrical about the vertical axis of the beam.
    - The theoretical number of debonded strands shall be rounded to the closest even number of strands except that debonded strands cannot be permitted in rows containing three strands or less.

- Exterior strands in all rows shall be fully bonded.
- Debonded strands shall be distributed laterally throughout the strand patterns as uniformly as practical. Debonded strands shall be separated by at least one fully bonded strand, whenever possible.

Reinforcement shall be provided in the top flange of all beams to control tensile cracks prior to, during and after release of the prestressing force. The reinforcement may consist of a combination of AASHTO M 31, Grade 60, deformed reinforcing bars and AASHTO M 203, Grade 270 prestressing strands.

The strands in the bottom flange shall be confined for a distance from the beam end equal to 1.5 times the depth of the beam. The confinement reinforcement shall be provided by deformed ties, AASHTO M 31, Grade 60, spaced at 6 IN maximum (AASHTO 5.10.10.2).

The vertical stirrup reinforcement for fully pretensioned beams shall be symmetrically spaced about the center of the beam.

3.4.3 Adjacent Box Beams

Prestressed box beam designs for spans ranging from 20 to 94 FT are included in the Standard Bridge Plans by the WVDOH. Design and Assembly Details and Design Tables are included for box beams ranging in size from 17 to 42 IN in height. Also included in the Standard Bridge Plans are Design and Assembly Details (BR-B100 thru BR-B104) that show the various details and notes that are to be included in the construction plans. The Standard Bridge Plans also include design tables for 12 IN plank beams for spans ranging from 10 to 22 FT. As of this printing, the box beams and plank beams in the Standard Bridge Plans have been designed using the AASHTO Standard Specifications (LFD) and are to be used only with the permission of the Bridge Project Manager.

Adjacent box beams are to be placed so that a ¾ IN gap is obtained between the beams to allow for the placement of a full depth shear key. The procedures for detailing and placement of the shear key are located on Standard Sheet BR-B103 of the Standard Bridge Plans. If these standard plans are not used, these details shall be included in the contract plans.

In addition to the full depth shear key, adjacent box beams are to be transversely post-tensioned using 1 IN diameter, 150 KSI thread bars conforming to AASHTO M 275, Type II. For skewed and non-skewed bridges, the full-length (transverse direction) thread bars shall be post-tensioned to a force of 80 KIPS. Thread bars that do not penetrate the full width of the structure shall be stressed to 40 KIPS.

When adjacent box beams are used that do not meet the standard drawings, a full design of the superstructure must be completed. If this design is performed, and the standard

sheets are altered, the Designer must insure that the words "Standard" and "Approval Signature" are removed from the sheets.

3.4.3.1 Alteration of Standard Sheets

The WVDOH has coordinated the development of these standards with the various suppliers of precast box beams. A commitment has been made that there will be no alteration to the standard sheets when they are incorporated into plans for specific bridges. The WVDOH has also implemented a statewide purchasing contract that will be utilized for the purchase of beams and slabs for bridges that will be constructed by state forces. This contract will be in effect for one year or longer and the contract prices are based on supplying beams and slabs per the design and details contained in the standard plans.

When standard plan sheets are incorporated into a set of plans for a specific bridge, no alterations of these sheets are to be made. If changes are absolutely necessary in order to adapt the plans to some unusual situation, then approval to alter the plan sheets must be obtained from the Director of Engineering Division. Exception to this is permitted where the design must be modified in accordance with the Odd Length Beams (Section 3.4.3.3) to accommodate odd span lengths not listed on the standard plan sheets.

3.4.3.2 Design Loading

The beams shown on the standard sheets were designed using the LFD Methodology. Any designs using standard sheets shall be checked against LRFD loading, unless approved by the Director of Engineering Division.

The design assumes a two-lane structure having a deck width of 33.67 FT out to out. The design loading is AASHTO HS-25 plus 50 PSF of wearing surface, 30 PLF for each guardrail barrier and a diaphragm load based upon the number required. Any increase in these loading conditions, such as additional wearing surface, may cause an overstressed condition in the beam at service loading. Dimensioning or detailing that would cause loading to exceed the above design loading will not be permitted unless approved by the Director of Engineering Division.

3.4.3.3 Odd Length Beams

The standard plans contain design and manufacturing details for specific span lengths. If the span lengths are between those listed on the standard plans, it cannot be assumed that the design and manufacturing data for the closest shorter or longer listed span length will be acceptable, particularly if a concrete barrier is being utilized. In this situation, the data for the next highest listed beam length shall be chosen. The initial tension at the beam end may be greater than the allowable, which may require additional debonding of

strands to alleviate the overstressing.

It will be necessary to check the design for span lengths other than those shown on the standard plan design data chart. It is requested that Engineering Division check designs prepared by consulting engineering firms or by district offices prior to extensive plan development. It is also requested that district offices include span length information in TS&L submittals so that the design can be checked as part of the TS&L approval. If changes are required from the standard design data and strand pattern, the Engineering Division will provide the necessary data. For projects designed by district offices, the Engineering Division will provide the data with the approved TS&L. The Designer should then add the revised data to the design data table of the particular beam sheet. Existing data should not be erased, but new data should be entered into a blank column in the table. If a revised strand pattern is required, the necessary revisions are to be made to the "Typical Beam Reinforcing Section".

3.4.3.4 Additional Design Information

A bituminous concrete wearing surface is appropriate on bridges with a low ADT (average daily traffic). On higher ADT bridges, a concrete deck, reinforced with a single mat of reinforcing steel, should be incorporated into the design. Horizontal shear bars shall be provided between the interface of the box beam and the concrete deck. The top surface of the beams shall have a roughened surface when a composite deck is used.

Adjacent box or plank beam bridges without composite decks will generally not be approved for situations where extremely high heavy truck traffic or heavy load service is anticipated. This commonly occurs on haul roads, due to the failure of longitudinal shear keys on bridges built in accordance with the WVDOH Standard Plans. This matter should be addressed during the early planning and TS&L stages of plan development.

The use of backwalls is encouraged on all new designs of adjacent precast/prestressed box beam bridges. When backwalls are used, expansion joint details shall be used as shown in Standard Plan Sheet BR-B100. If a composite deck with backwall is used, see Figure 3.4.3.4.

Bridges without backwalls may be used, with the written permission of the Director of Engineering Division. Bridges without backwalls shall be limited to low class, low volume roads that do not receive salt treatment or do not receive salt from secondary means, such as a bridge near a road that is treated. Details to be used on bridges without backwalls are shown in Standard Plan Sheet BR-B100.

Curbs shall be used on precast box beam structures only when bridge guardrail is not required. Curbs may be used with guardrail if required to control deck drainage where the bridge crosses over a roadway, railway or other facility. Curbs will be permitted on precast box beam bridges only with the written approval of the Director of Engineering Division. Hazard panels will be required per Standard Detail TP5-2.

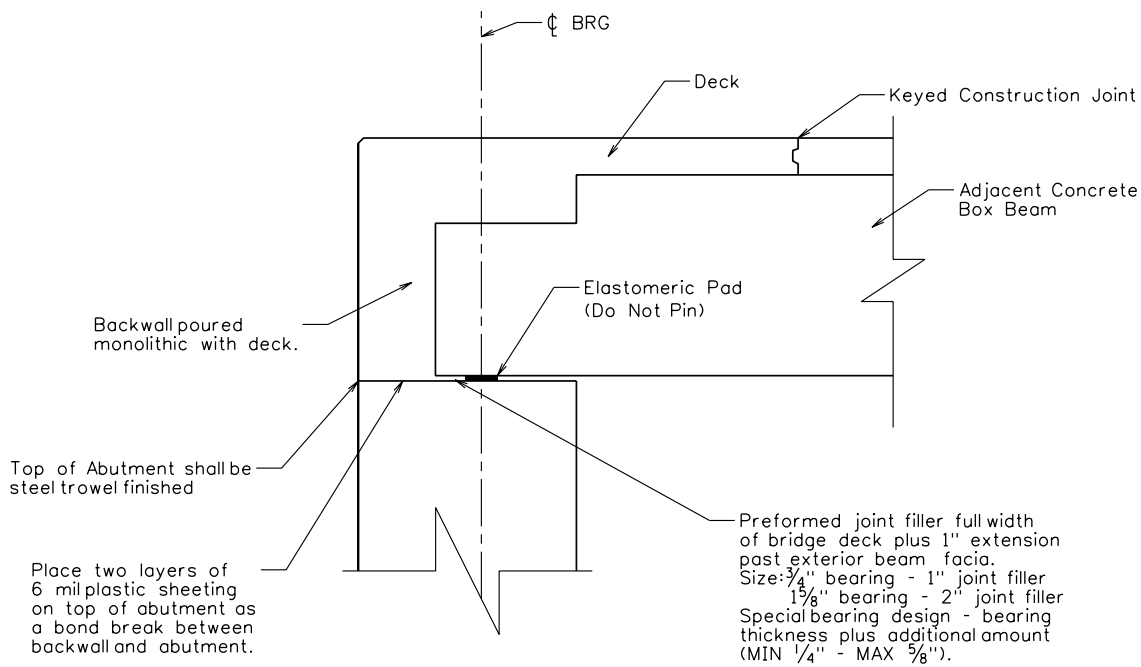

Preformed joint filler shall meet the requirements of Subsection 708.1.1 of the Standard Specifications(Type I Sponge Rubber) No color requirement is specified.

BACKWALL DETAIL

(To be used with composite decks)

Figure 3.4.3.4

3.4.4 Segmental Concrete Structures

3.4.4.1 Introduction

The following design criteria apply to the design of precast or cast-in-place segmental concrete bridges. The design shall satisfy the requirements of section 5.14.2 of the Governing Specifications. Wherever applicable, other sections of this Design Manual shall apply.

3.4.4.2 Methods of Construction

Different construction methods can be used for segmental structures. The most commonly used methods are:

- Span-by-Span Method: In this method a temporary erection truss or a fabricated girder, spans from one pier to the next to support the precast segments (including I-girders) for an entire span while they are placed, assembled and post-tensioned together to become a self-supporting structure. The span range for this method is between 100 and 180 FT.
- Balanced Cantilever Method: In this method, the segments are placed symmetrically about a pier so that upon application of the permanent cantilever tendons, the superstructure is balanced. Successive cantilevers are connected together through mid-span closure pours using longitudinal continuity tendons. The recommended clear span between piers may range from 150 to 450 FT for precast construction. For a span range of 450 to 700 FT, cast-in-place construction with a form traveler can be used. For spans greater than 600 FT, the weight of the haunched segments near the piers, diminish the feasibility of using such method and cable-stay construction becomes more competitive.

3.4.4.3 Specifications

For items not specifically addressed in the Governing Specifications, the following may be consulted:

- AASHTO *Guide Specifications for Design and Construction of Segmental Concrete Bridges*.
- AASHTO *Standard Specification for Highway Bridges*.
- AASHTO *Guide Specifications of Distribution of Loads for Highway Bridges*.

3.4.4.4 Notation

Unless otherwise indicated, the notations used in these criteria correspond to the notations contained within the codes upon which these criteria are based. The codes are specified where necessary.

3.4.4.5 Loadings

All applicable loadings specified in the Governing Specifications, Section 3, shall be considered in the design. The load modifier, which is a factor accounting for ductility, redundancy and the operational importance of the bridge shall follow Sections 3.1.4 of this Manual.

In addition to the loading combinations specified in Table 3.4.1-1 of the Governing Specifications, the following combination shall be investigated at the service limit state: DC + DW + EH + EV + ES + WA + CR + SH + TG + EL, where all loads are as defined in AASHTO 3.3.2.

Construction loads and construction loading combinations for the service limit state and the strength limit state shall follow Section 5.14.2 of the Governing Specifications.

3.4.4.5.1 Thermal Effect

- For positive temperature gradient, Section 3.12.3 of the Governing Specifications shall be implemented considering Zone (3) in Table 3.12.3-1. Negative temperature values shall be obtained by multiplying the specified positive values by (–0.3) for plain concrete decks and (–0.20) for asphalt overlay.
- In lieu of project specific information, the load factor for temperature gradient may be taken as:
  - 0.0 for strength and extreme event limit states.
  - 1.0 for service limit state when live load is not present.
  - 0.5 for service limit state when live load is present.

3.4.4.5.2 Creep and Shrinkage

The Governing Specifications shall be used to determine strains due to shrinkage and to estimate creep coefficient. For major and long span bridges, a creep test is recommended. Moment redistribution in a continuous structure, which occurs after the construction of the closure pours, for the effect of creep and shrinkage shall be carefully considered. Resulting stresses shall be calculated assuming a realistic construction sequence submitted to the Design Engineer.

3.4.4.5.3 Prestressing

Sections 5.9 and 5.10 of the Governing Specifications shall be referenced. The structure shall be designed for both initial and final prestressing forces. The design shall satisfy the following criteria:

- All prestressed box girder deck slabs shall be transversely post-tensioned, unless the box wings are relatively short so that mild reinforcement would be sufficient to resist the applied loads. However, the use of transverse post-tensioning in short wings will increase deck durability and thus justifying any extra expense.
- If draped tendons are used in the deck slab, consideration shall be given to the final location of the center of gravity of the strands within the duct. Critical eccentricities over the web and at the centerline of the box shall be reduced by ¼ IN from the theoretical value to account for construction tolerances.
- The effect of structural indeterminacy, which reveals itself in the form of secondary moments due to prestressing, shall be carefully examined; otherwise, substantial secondary effects may arise causing unexpected internal stresses.
- In the design of horizontally curved bridges, special consideration shall be given to the effect of the lateral force component of the curved tendons. This force may cause additional transverse bending stresses in the box cross-section. Also, the spacing between the prestressing ducts shall be sufficient to allow enough concrete presence, to prevent any tendon overlap resulting from the straightening of the tendons. When a tendon curves in two planes, the in-plane and out-of-plane forces shall be added vectorially.
- Unless a vibration analysis indicates otherwise, the unsupported length of external tendons shall not exceed 25 FT.

3.4.4.6 Materials

3.4.4.6.1 Concrete

Minimum 28 days cylinder compressive strength (f'_c) for concrete shall be as follows:

- Cast-in-place (CIP) segmental superstructure 6500 PSI
- Precast segmental superstructure (including CIP joints) 6500 PSI

Clear concrete cover for the superstructure shall be as follows:

- Top riding surface 2.0 IN
- Outside face of webs 2.0 IN
- Other locations 1.5 IN

The Governing Specifications shall be referenced for other cover requirements.

3.4.4.6.2 Prestressing Steel

Prestressing steel shall conform to the following specifications:

- Strand tendons shall conform to AASHTO M203 Grade 270, low relaxation
  - Ultimate strength of prestressing steel (f_{pu}) 270 KSI
  - Yield stress (f_{py}) may be taken as $0.9f_{pu}$ 243 KSI
  - Apparent modulus of elasticity 28,500 KSI
- Parallel wires shall conform to AASHTO M204

Other parameters:

- Apparent modulus of elasticity 28,500 KSI
- Friction coefficient 0.25 per RAD
- Wobble coefficient 0.0002 per FT
- Anchor set 0.375 IN

Bar tendons (high strength threaded bars) shall conform to the following specifications:

- Bar tendons shall conform to AASHTO M275 Grade 150
  - Ultimate strength of bar (f_{pu}) 150 KSI.
  - Yield stress (f_{py}) may be taken as 0.8fpu 120 KSI
  - Modulus of elasticity 30,000 KSI

Other parameters:

- Modulus of elasticity 30,000 KSI
- Friction coefficient 0.30 per RAD
- Wobble coefficient 0.0002 per FT
- Anchor set 0.063 IN

3.4.4.7 Allowable Stresses

3.4.4.7.1 Concrete Allowable Stresses

Concrete allowable stresses, in the transverse and longitudinal directions, under temporary construction loads at service limit state shall follow Section 5.14.2.3.3 of the Governing Specifications.

Concrete allowable stresses for permanent loading conditions shall satisfy section 5.9.4 of the Governing Specifications.

3.4.4.7.2 Prestressing Allowable Stresses

For prestressing tendons:

- Maximum jacking stress — 0.8 f_{pu} but not to exceed 0.90 f_{py}
- At anchorage after anchoring — 0.70 f_{pu}
- At other locations after anchoring — 0.74 f_{pu}
- At service limit state after losses — 0.80 f_{py}

For prestressing bars:

- Maximum jacking stress — 0.70 f_{pu}
- At anchorage after anchoring — 0.70 f_{pu}
- At service limit state after losses — 0.80 f_{py}

3.4.4.8 Box Girder Proportions

The box girder cross-section dimensions shall satisfy the requirements of Section 5.14.2.3 of the Governing Specifications. The overall dimension of the box girder cross-section shall preferably not be less than that required to limit the live load plus impact deflection, calculated using the gross section moment of inertia and the secant modulus of elasticity, to 1/1000 of the span.

See the commentary of Section 5.14.2.3.10d of the Governing Specifications for determining girder depth and web spacing.

The proposed precast AASHTO-PCI-ASBI standard box girder for span-by-span and balanced cantilever constructions can also be used for the bridge cross section.

Segment weight shall be suitable for construction and erection equipment.

3.4.4.9 Analysis Method and Mathematical Computer Modeling

Analysis of segmental bridges shall follow the guidelines outlined in Section 4.6.2.9 of the Governing Specifications. Elastic analysis and beam theory can be used to determine design moments, shears and deflections.

The analysis shall be conducted in both the transverse and longitudinal directions. The effect of secondary moment due to prestressing shall be included in stress calculations at the service limit state. At the strength limit state, the secondary force effects induced by prestressing, with a load factor of 1.0, shall be added algebraically to the force effects due to all other factored loads.

The effective flange width for box girders shall be based on Section 4.6.2.6 of the Governing Specifications. The capacity of the cross section at the strength limit state may be determined by considering the full compression flange width effect. Shear lag shall be considered for service load stress calculations. If the width (tip to tip of wings) to depth ratio exceeds 6, the designer must analyze for the effect of shear lag.

Segments of horizontally curved bridges with torsionally stiff closed sections whose central angle subtended by a curved span or portion thereof is less than 12° may be analyzed as if the segments were straight.

Mathematical models shall include loads, geometry and material behavior, and where appropriate, response characteristics of the structure foundation and soil-structure interaction. Any available segmental computer software approved by the WVDOH may be used. The computer model shall verify the anticipated structural behavior and must include all of the construction stages suggested for the project. It must also account for the final status of the bridge under service loads as well as the effect of time dependent factors such as creep, shrinkage and prestressing losses.

3.4.4.10 Design Method

All applicable limit states (strength, extreme events, service and Fatigue) shall be satisfied in accordance with the Governing Specifications.

The service limit state covers cracking, deformations, deflections and concrete stresses. For the strength limit state, the resistance factors shall follow Section 5.5.4.2 of the Governing Specifications. The structure as a whole shall be proportioned to resist collapse due to extreme events specified in Table 3.4.1-1 of the Governing Specifications as may be appropriate to its site and use.

The deck shall be designed per AASHTO 9.7.6, Deck Slabs in Segmental Construction. The deck overhang shall be designed considering the three load cases specified in the Governing Specifications Section A13.4.

3.4.4.11 Shear and Torsion

Section 5.8 of the Governing Specifications shall be applied for shear and torsion design. The analysis is based on the Modified Compression Field Theory (MCFT) instead of the traditional ACI empirical equations.

It is conservative to design based on maximum shear and maximum torsion. However, it is sufficient to design using the maximum shear and the corresponding torsion and the maximum torsion with its associated shear. The vertical component of the longitudinally draped tendons shall be algebraically added to the acting shearing force.

In a box girder, the stresses due to shear and torsion will be additive on one side of the web, while counteracting each other on the other side. Therefore, the transverse web reinforcement shall be based on the summation of reinforcement due to shear and torsion.

Checks for principal tensile stresses shall be performed as a method of preventing cracking under service load conditions.

3.4.4.12 Total Web Reinforcement

The web reinforcement consists of flexural reinforcement required by transverse analysis and that required from the shear and torsion design. The total reinforcement may be taken as the largest of:

- 50% of flexural reinforcement + 100% of shear and torsion reinforcement
- 100% of flexural reinforcement + 50% of shear and torsion reinforcement
- 70% of flexural reinforcement + 70% of shear and torsion reinforcement

3.4.4.13 Segmental Construction Joints

Joints in precast segmental bridges shall be either cast-in-place closures or match cast. Cast-in-place concrete joints and epoxy joints between precast units shall be considered as Type A joints. Dry joints shall be considered as Type B joints.

The resistance factors of the joints in flexure and shear shall follow that of Table 5.5.4.2.2-1 of the Governing Specifications.

For Type A joints, auxiliary bonded reinforcement through the joint may be provided at a stress of 0.5 fy to carry the allowable tensile force in accordance with Tables 5.9.4.1.2-1 and 5.9.4.2.2-1 of the Governing Specifications.

The concrete strength of the cast-in-place closures shall not be less than that of the precast concrete. The width of the closure shall permit the development of the reinforcement in the joint or coupling of the tendons ducts if used.

Type B joints (dry joints) are not permitted.

3.4.4.14 Shear Keys

There are two types of shear keys in the match-cast joint between precast segments:

- Web shear keys: Located on the faces of the webs of precast box girders. The total depth of shear keys shall be approximately 75% of the section depth and its width shall be at least 75% of the web thickness.
- Alignment keys: Located in the top and bottom slabs. Alignment keys are not expected to transfer the shear forces at the joints, but rather to correct alignment of the two match-cast segments being erected. For a single-cell box, normally a minimum of three alignment keys is required on the top slab and one on the bottom slab.

Both shear and alignment keys shall not be located in the tendon duct zones.

3.4.4.15 Erection Schedule and Construction

The method of construction assumed for the design shall be shown in the contract documents. Temporary supports required prior to the time the structure, or its components, is capable of supporting itself and subsequently applied loads, shall be clearly shown in the contract documents.

A typical erection schedule and anticipated construction system shall be incorporated into the design documents in an outlined schematic form. The assumed erection loads along with time of application and removal of erection loads shall be clearly stated in the plans.

3.4.4.16 Construction Data Elevations and Camber Curve

Construction data elevations shall be based on the vertical and horizontal highway geometry. Camber curves shall be calculated and based on the assumed erection loads and schedule used in the design as well as the assumed construction sequence. Camber curve data shall be provided at the centerline of the box. Camber is the amount by which the concrete profile, at the time of casting, must differ from the geometric profile grade in order to compensate for all structural dead load, post tensioning, long and short-term time dependant deformations and the effects of construction loads and sequence of erection.

3.4.4.17 Integrated Drawings

Contract drawings shall be prepared in accordance with Method A as explained in Section 5.14.2.3.9 of the Governing Specifications. Congested areas of post-tensioned concrete shall be shown on integrated drawings with an assumed post-tensioning system. Such areas include, but are not necessary limited to, anchorage zones, areas containing embedded items for the assumed post-tensioning system, areas where post-tensioning ducts deviate both in the vertical and transverse directions and other highly congested areas as determined by the Designer and/or the WVDOH.

The assumed post-tensioning system, embedded items, etc. shall be selected in a manner that will accommodate competitive systems (e.g., using standard available anchorage sizes). Integrated drawings utilizing the assumed system shall be detailed to show reinforcing and post-tensioning steel in two-dimensions (2-D) and, when necessary, in complete three dimensional (3-D) drawings.

3.4.5 Miscellaneous Shapes/Types

Other shapes such as spread boxes, T-beams, double-T's and slab structures may be considered for use in bridge projects provided the beams satisfy all required design criteria.

3.5 TIMBER SUPERSTRUCTURES

Timber structures are not an economical alternative for most bridge sites. However, the aesthetic benefits of a structure made from timber may outweigh the costs associated with construction and maintenance.

3.5.1 Limitations

Typically, single span structures on low ADT roads are good candidates for timber bridges. Timber structures may be considered for pedestrian bridges. While timber structures are encouraged for smaller bridges within West Virginia, they are not practical for most sites.

A partial list of limitations to the use of timber structures:

- The inability of timber to be made continuous over interior supports makes it an unfavorable alternate on multiple spans.
- Spans over 100 FT pose deflection and camber limitations.

- Members are considerably deeper than competing materials, thereby potentially restricting waterway openings.

3.5.2 Types

3.5.2.1 Glulam System

A glulam system consists of a series of transverse glulam deck panels supported on straight or slightly curved longitudinal glulam beams. Glulam components are manufactured from 1 ½ to 2 IN thick lumber laminations that are bonded together on their wide faces with a waterproof structural adhesive. This system is the most practical for clear spans of 20 to 100 FT (although they can span even larger distances) and are widely used on single-lane and multiple-lane roads and highways. Beams are the principal load-carrying components of the bridge superstructure. For additional information, see the Timber Bridge Manual, Chapter 7, Part 1.

3.5.2.2 Longitudinal Glulam Deck

Longitudinal glulam deck bridges are composed of a series of glulam panels placed edge to edge across the width of the bridge. These systems are suitable for spans up to 35 FT. The panels are not post-tensioned or interconnected with dowels. Continuity is achieved through transverse stiffener beams bolted directly to the panels through brackets below. For further details of longitudinal glulam deck bridges, see the Timber Bridge Manual, Chapter 8.

3.5.3 Design Procedure

All timber bridges shall be designed according to Section 8 of the Governing Specifications.

The United States Department of Agriculture – Forest Service has a publication on Timber Bridges: *Timber Bridges – Design, Construction, Inspection, and Maintenance*, 1992 (Timber Bridge Manual). This manual may serve as a useful tool during the design process. Note that this manual was written as a design aid using the LFD Design Method. Special considerations shall be given when applying this manual to the current LRFD Design Method.

The dynamic load allowance shall be reduced by 50% for timber bridges and wood components of bridges.

Lumber size shall be selected based upon available sizes. Structural calculations shall be based upon available sizes. Structural calculations shall be based on actual dimensions rather than nominal dimensions.

3.6 BEARINGS

Bearing devices are mechanical systems that transmit loads from the superstructure to the substructure. Also, bearing devices provide for movement due to thermal expansion and contraction as well as rotational movement associated with the deflection of primary members. There are two principal types of bearings: fixed and expansion. Fixed bearings only allow rotation while expansion bearings permit both rotation and translation. All bridge bearing designs shall be in accordance with the Governing Specifications.

The applicability of certain types of bearings will vary depending on the loads and movement the bearing is required to sustain. Elastomeric bearings are preferred for most span arrangements. Polytetrafluorethylene (PTFE or Teflon) expansion bearing assemblies or pot bearings may be used when span lengths, curvature, or load limits for the standard elastomeric pads are exceeded. Elastomeric bearing pads shall be designed using "Method B" found in the Governing Specifications using an elastomer with a hardness of 50-60 Durometer. A plan note for monitoring welding temperatures shall be added when an elastomeric bearing with a load plate is specified in the plans (see Appendix A).

Concrete surfaces in contact with the bearings shall be adequately reinforced to prevent bursting, splitting and/or spalling. This also applies to any jacking pockets or jacking locations provided for the future replacement of bearings.

Where the potential for slip exists between an elastomeric bearing pad and the beam seat, use epoxy grit to increase the coefficient of friction between the surfaces in contact.

Any components to be welded to the superstructure steel, such as sole plates, shall be painted as superstructure steel. Plates, fasteners or other components fabricated as part of, and permanently attached to elastomeric bearings may be painted.

Steel components of bearing devices shall be galvanized/metalized except as noted. These components shall include, but not limited to, masonry plates, rockers, sliding bearing plates, pins, bolts, nuts, washers, anchor bolts, nuts and washers. Galvanizing shall be hot dipped galvanizing in accordance with AASHTO.

Proper consideration shall be given to those components that have finished surfaces such as sliding bearing surfaces, finished surfaces of pins, and pin holes where galvanizing may not be permissible. Plates receiving Teflon pads or stainless steel sheets shall not be

galvanized. The plates shall be SSPC-SP-6, commercial blast cleaned, and except for areas with special facings, shall be painted in accordance with the Specifications.

Weathering steel may be used for bearing devices. There are no known issues of having galvanized parts in contact with weathering steel.

Slotted holes are not permitted on fixed bearings.

All bridge bearings shall be accessible for inspection and maintenance with the exception of integral abutment bearings. The bearings shall also be replaceable without damage to the structure and without removing anchorages permanently attached to the substructure.

3.6.1 Bearing Design Criteria

Combinations of load, rotation and translation anticipated during construction shall be incorporated into the design of the bearings with allowance for construction tolerances and variation of temperature at installation. It is possible that the rotation and translation of the bearings may be significant during construction and may not be fully relieved, resulting in "locked-in stresses" in the bearing. If not sufficiently accounted for in design, these effects from construction could potentially cause an overstress under normal service conditions and/or adversely affect service life of the bearing. The Designer shall evaluate construction loading and movement in the design of the bearings and incorporate the most cost-effective of the following alternatives to control or relieve stress in the bearings from construction:

- Prior to allowing traffic on the newly constructed bridge, jack the bearing assemblies to relieve possible stresses that may have occurred during construction. This excludes bearings at integral supports. For concrete beam structures made continuous for live load, jack bearing assemblies prior to casting the continuity joint.
- Design the bearings for additional movement/rotation during construction that includes sufficient tolerance for; temperature variation at installation (from assumed ambient temperature), anticipated rotations and out of level support surfaces at the bearing seats.
- Prescribe the installation temperature for the bearings and require beam seats to be level or within defined dimensions. These requirements shall be incorporated into the design of the bearings, specified in the construction documents and verified during construction.

Elastomeric bearings for integral abutments must be designed to support non-composite dead load reactions and beam rotations. Thermal forces are not considered since the time between beam placement and final closure pour is assumed to be small. Reactions and rotations shall be based on actual span configuration. No further design cases are required. All superimposed dead loads and live loads at the final configuration are supported by the closure pour. The minimum pad thickness is ½ IN.

Elastomeric bearings for semi-integral and expansion abutments must support dead load plus live load reactions and must resist dead and live load rotations. Before the abutment closure pour, if applicable, bearings must be designed to support non-composite dead load reactions and beam rotations. Reactions and rotations shall be based on actual span configuration. For concrete beams, rotations due to dead loads at the final stage shall be calculated to include long-term deflections considering creep and shrinkage. In addition, the bearings must resist lateral forces due to thermal expansion and contraction.

3.6.2 Bearing Replacement

Provisions for future jacking of the structure, for the future replacement or realignment of bridge bearings, shall be included in the design of new bridge projects. Jacking locations shall be shown in the TS&L Study and on Final Detailed Bridge Plans. The Designer shall develop a suitable jacking scheme with consideration given to available equipment such as jacks, controls and false work. Appropriate modeling techniques shall be employed to determine jacking forces in the structure and to evaluate the bridge to determine the effects due to jacking. The Designer will consider jacking forces in bridge components, identifying and evaluating potential adverse effects to components such as cross frames, diaphragms, deck slab, substructures, etc. The Designer shall consider jacking forces in the design of bridge components, providing appropriate sizing and/or details sufficient to resist the anticipated jacking forces. The jacking scheme shall be provided on the contract plans in sufficient detail and clarity to ensure successful jacking of the structure. Jack locations, jacking forces, maximum jacking height and all pertinent information and restrictions, including any special traffic restrictions, shall be included.

3.7 EXPANSION DEVICES

All bridges shall be designed to eliminate deck expansion joints where practical. If expansion devices are required, they shall be detailed to prevent damage to the structure from water, deicing chemicals and roadway debris. AASHTO Section 14, Joints and Bearings, shall govern the design for all expansion devices. The Designer shall provide joint opening information on the plans with provisions for temperature variations. The following features shall be considered for all designs:

- Multi-span bridges shall be continuous over interior supports when applicable.
- All proposed deck expansion joints shall be clearly shown in the TS&L.

3.7.1 Transverse Joints

3.7.1.1 Thermal Movement Less Than Two Inches

When appropriate, structures with a total thermal movement of 2 IN or less shall be designed in accordance with the Integral Abutments Section of this manual, Section 3.9.1.

3.7.1.2 Thermal Movement From Two to Four Inches

When semi-integral abutments cannot be used, strip seal expansion devices shall be used for a thermal movement range of 2 to 4 IN. The scope of this specification is limited to preformed non-reinforced, polychloroprene (neoprene) strip seal glands that mechanically lock into steel retainers. The steel retainers shall be anchored into the structure in accordance with the contract requirements.

See Appendix A, Miscellaneous Plan Notes, for notes to be included when strip seals are specified.

3.7.1.3 Thermal Movement Greater Than Four Inches

Finger plate expansion devices with a drainage trough may be utilized for thermal movements greater than 4 IN. The minimum thickness of a finger plate shall be 2 IN. Proprietary modular expansion devices may be used for these movements with approval of the Director of the Engineering Division.

Two types of drainage troughs may be used: either rubberized or preformed fabric material. Rubberized trough material shall consist of neoprene. Preformed fabric material shall consist of multi-ply polyester fabric and rubberized trough material vulcanized to form a laminate. The designer shall detail the trough with a minimum slope of 1:12, to allow for proper drainage.

All bridge expansion devices must be designed bicycle/pedestrian safe by attaching a flat plate on top of the expansion device. The plate shall be welded to the approaching traffic side of the device as shown in the Figures 3.7.1.3A and 3.7.1.3B.

See Appendix A, Miscellaneous Plan Notes, for notes to be included when finger plates are specified.

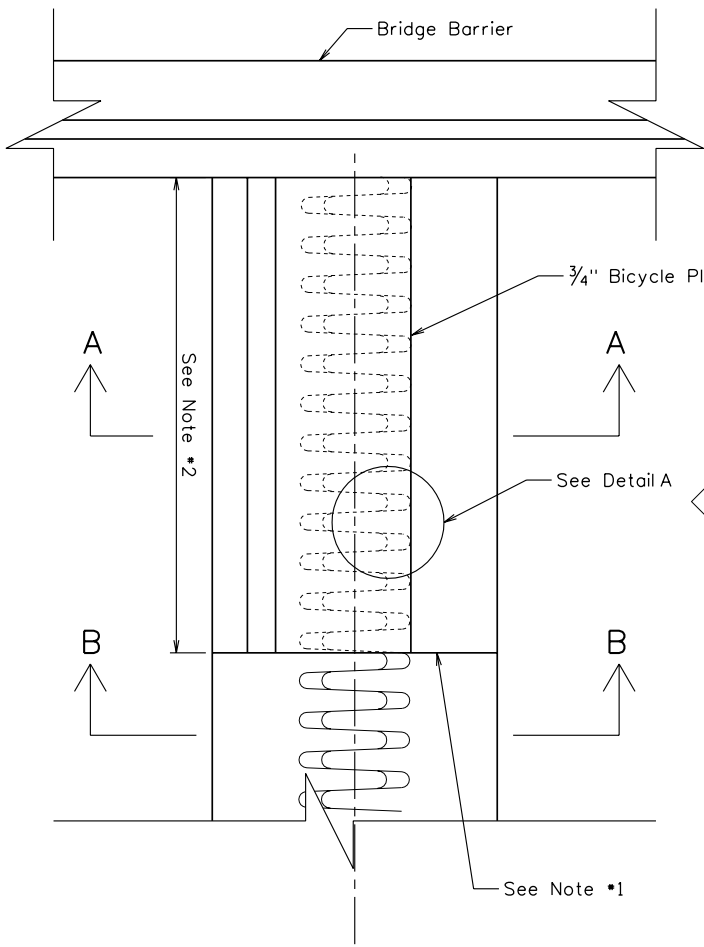

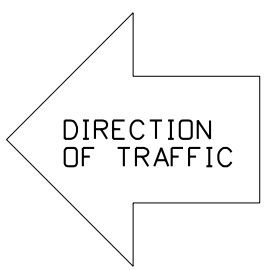

Notes:
1. Section A-A may be manufactured separately and butt welded to Section B-B or machined to a depth of 3/4" to accomodate the bicycle plate.
2. The length of the bicycle plate shall be the shoulder width minus 6" with 5'-0" being the minimum.
3. Clearance of the fingers may be adjusted by the fabricator as required to clear fillet welds.
4. The bicycle plate shall have the same ball stud pattern as the rest of the dam.
5. Special signing is required as directed by the Traffic Engineering Division.
6. Z is the opening dimension at 68° F.

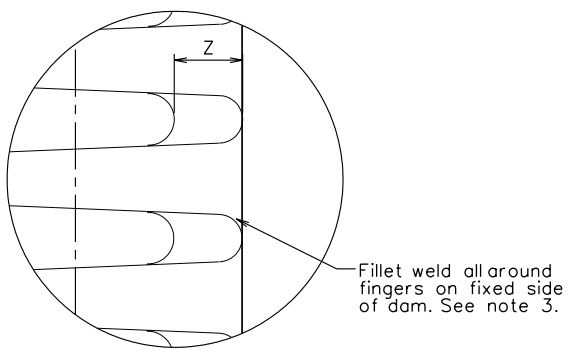

DETAIL A

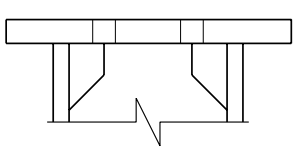

SECTION B-B

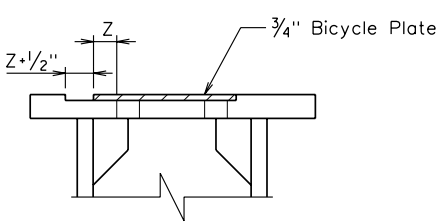

SECTION A-A

BICYCLE/PEDESTRIAN ACCOMODATION DETAIL
FINGER/TOOTH EXPANSION DAM
NEW BRIDGES

Figure 3.7.1.3A

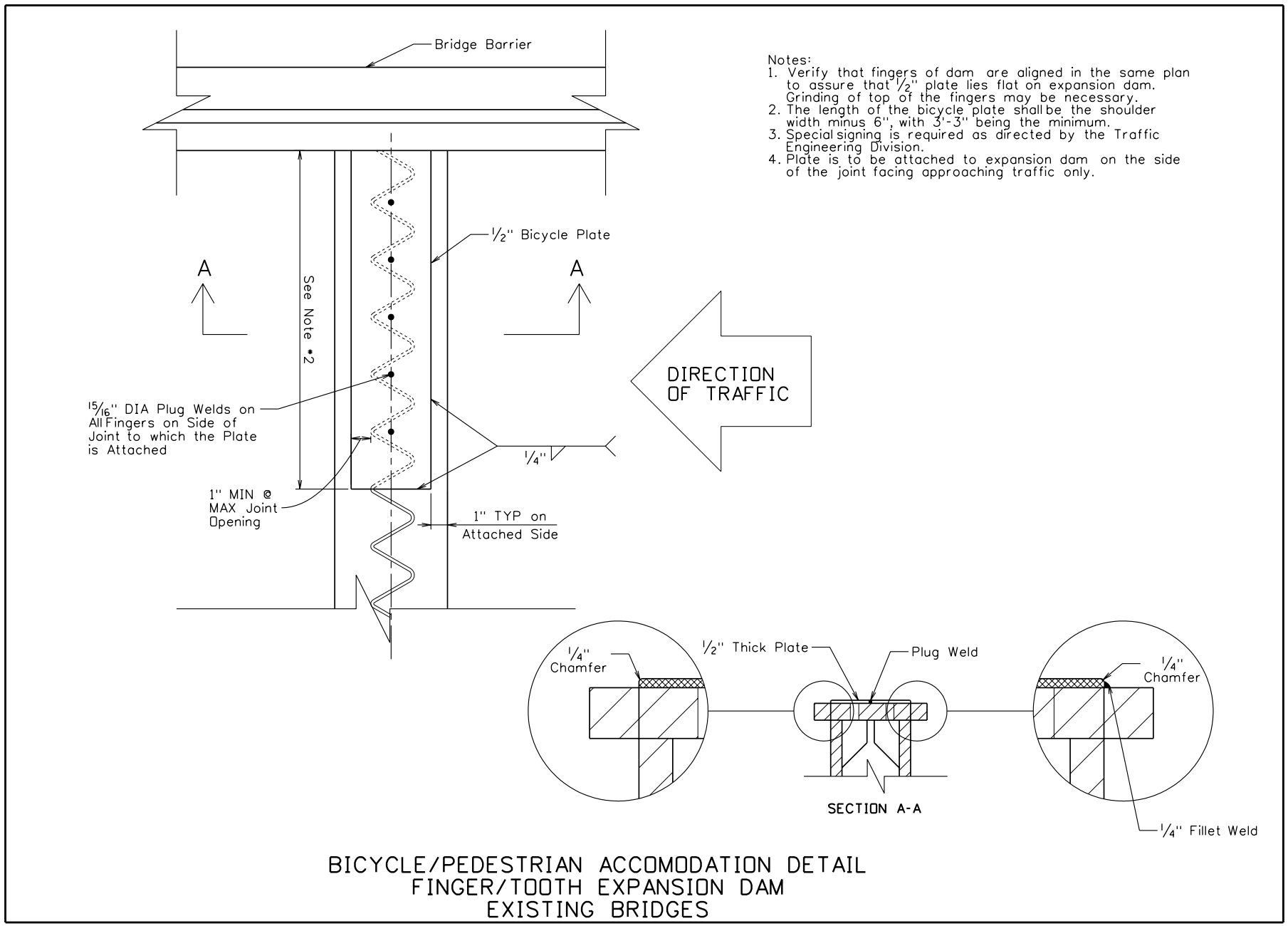

Figure 3.7.1.3B

3.7.2 Longitudinal Joints

Longitudinal joints may be used on bridge decks with the permission of the Bridge Project Manager.

When longitudinal joints are used, they shall be placed where drainage is not a consideration.

Two types of longitudinal joints that may be considered are two-part silicone sealant or a strip seal and must be designed for the movements of the structure.

3.8 ABUTMENTS

3.8.1 Abutment Design Criteria

The main parts of an abutment are the bridge seat, backwall, stem, wingwalls and foundation (see Figures 3.8.1A thru 3.8.1D. Several types of abutments can be utilized for a particular bridge site (see Section 2.4.3, Abutment Types). Aesthetics can sometimes be a factor when selecting an abutment type. Abutment designs shall be in accordance with Section 11 of the Governing Specifications.

Class B Concrete with a compressive strength of 3000 PSI should be used in most abutments. The minimum reinforcing throughout the abutment and wingwalls shall be No. 5 bars spaced at 1 FT. All reinforcing steel above the beam seat shall be epoxy coated.

3.8.2 Bridge Seat

The width of the bridge seat must be sufficient to accommodate the beams or girders, jacking operations and meet the seismic requirements of the Governing Specifications. Adequate room between the beams or girders and the backwall shall be provided to allow for expansion joint inspection, where applicable.

Due to roadway cross-section slopes or skewed abutments, it may be necessary to provide beam seats of different elevations. When detailing abutments, the difference in elevations between adjacent beam seats may be achieved by stepping the top of the stem, or by utilizing a sloped stem to eliminate the effects of cracking in large bridge seat steps (see Figure 3.8.2). The sloped stem option is preferred when the slope of the berm allows.

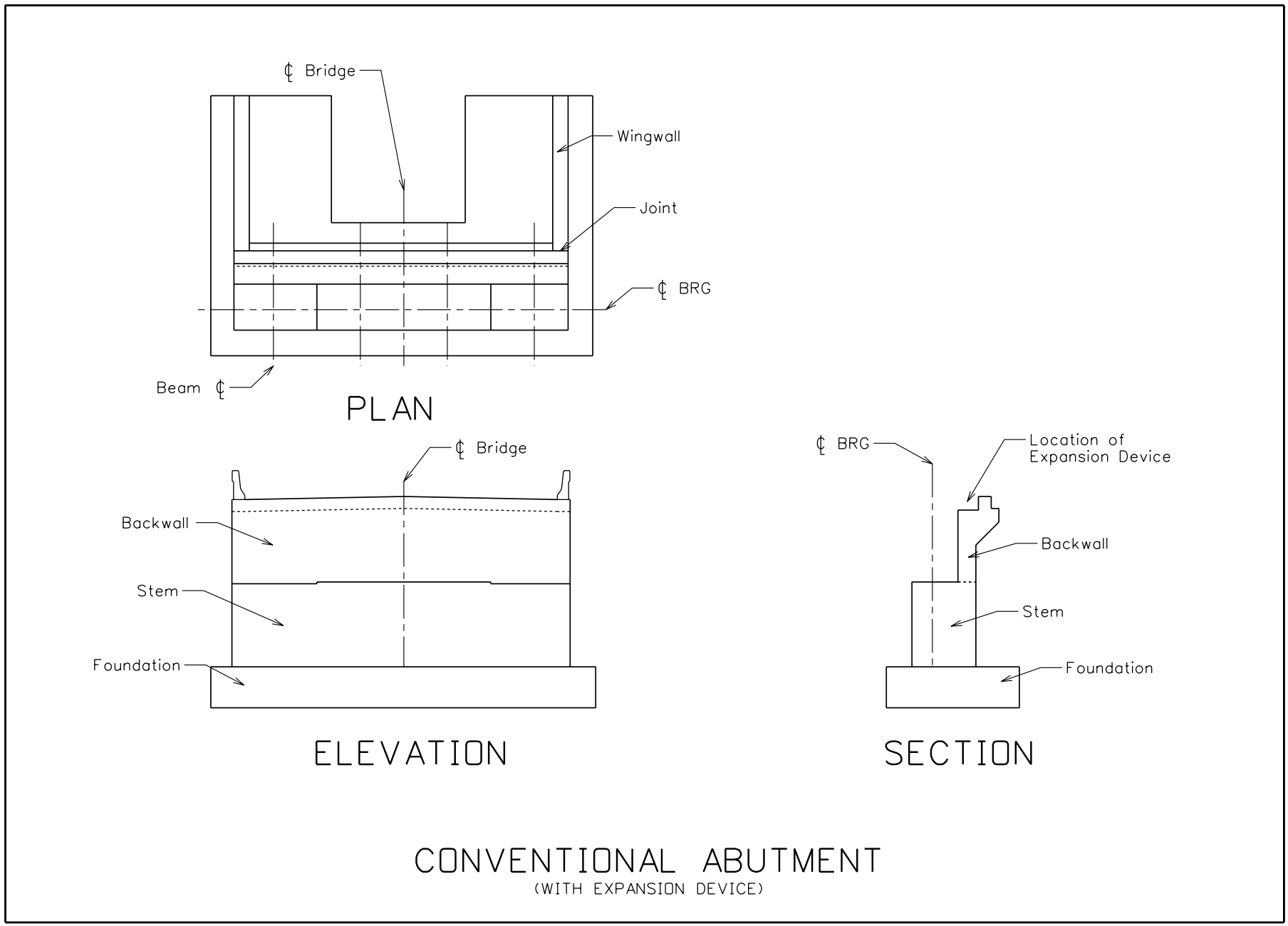
℄ Bridge
Wingwall
Joint
℄ BRG
Beam ℄
PLAN
℄ Bridge
Backwall
Stem
Foundation
ELEVATION
℄ BRG
Location of
Expansion Device
Backwall
Stem
Foundation
SECTION
CONVENTIONAL ABUTMENT
(WITH EXPANSION DEVICE)

Figure 3.8.1A

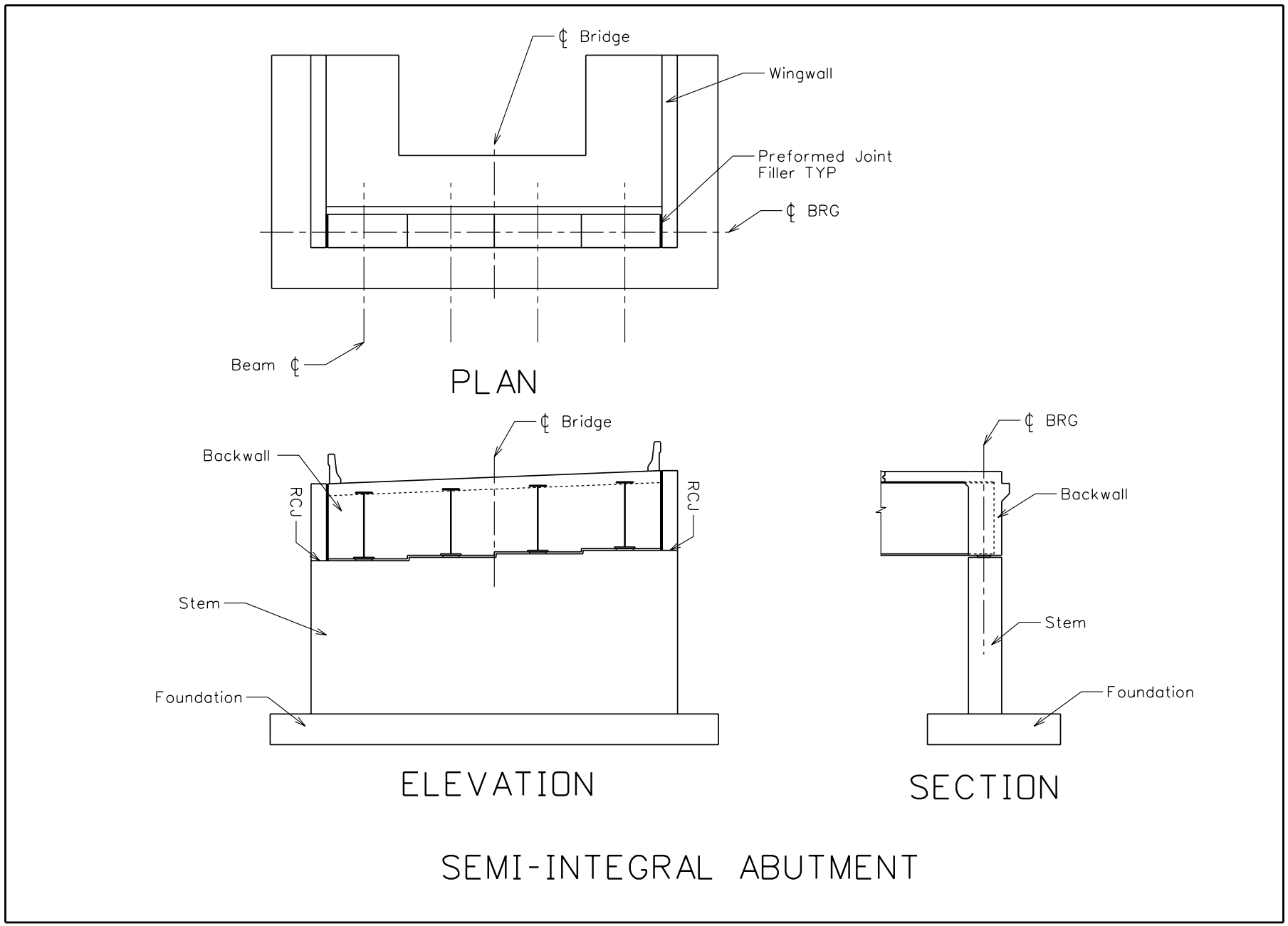
℄ Bridge
Wingwall
Preformed Joint
Filler TYP
℄ BRG
Beam ℄
PLAN
℄ Bridge
Backwall
RCJ
RCJ
Stem
Foundation
ELEVATION
℄ BRG
Backwall
Stem
Foundation
SECTION
SEMI-INTEGRAL ABUTMENT

Figure 3.8.1B

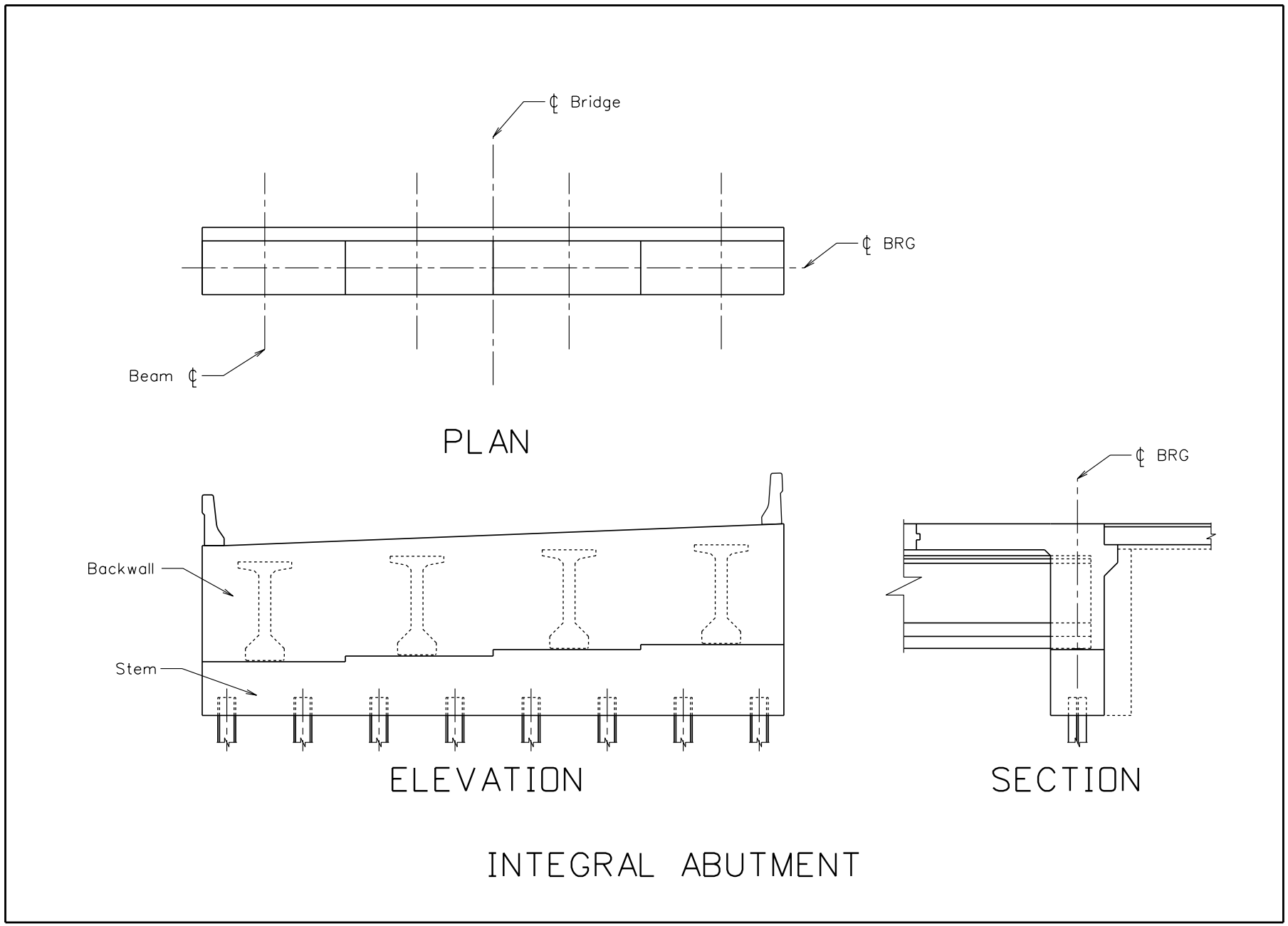
℄ Bridge
℄ BRG
Beam ℄
PLAN
Backwall
Stem
ELEVATION
℄ BRG
SECTION
INTEGRAL ABUTMENT

Figure 3.8.1C

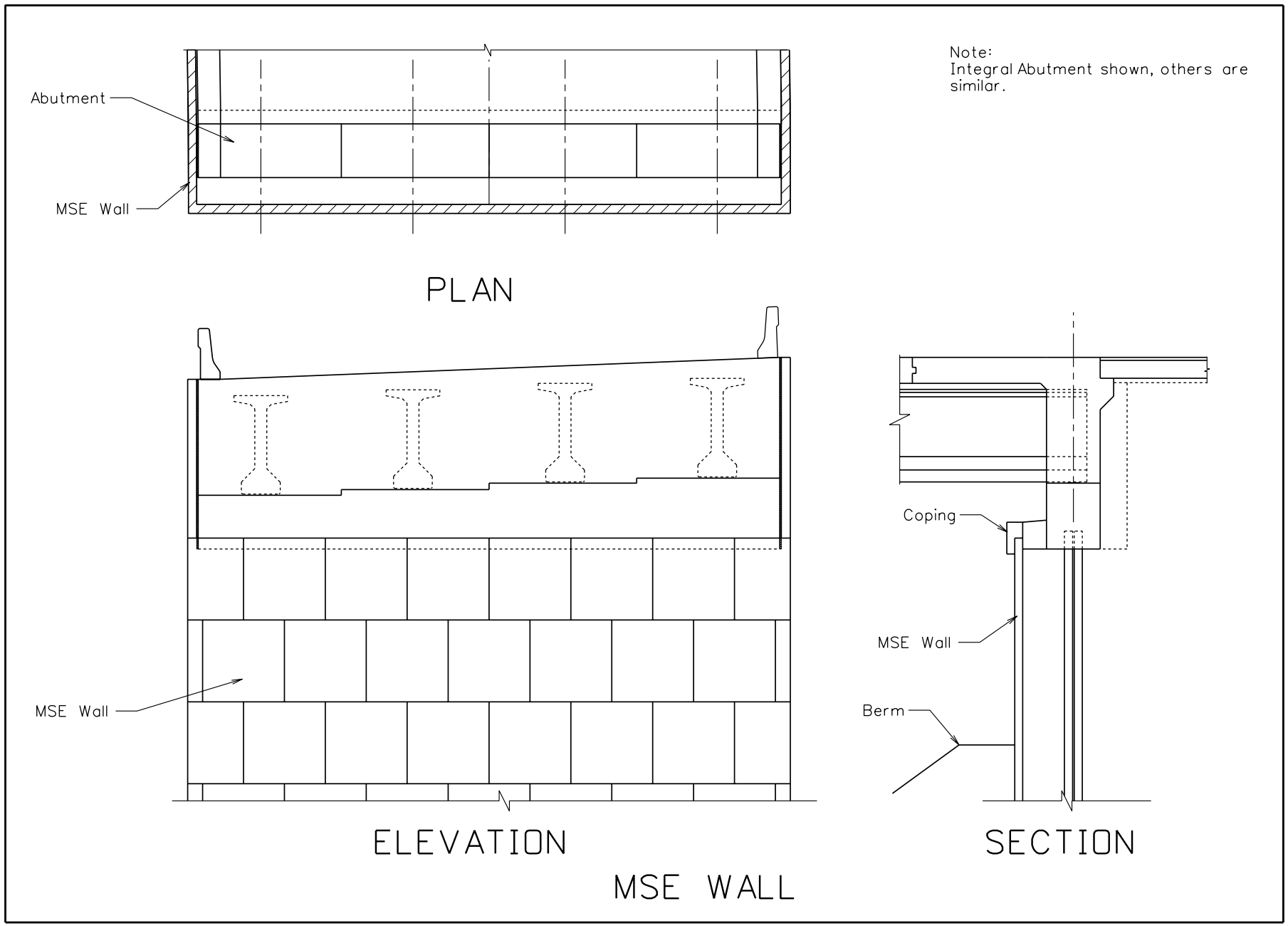
Note:
Integral Abutment shown, others are similar.
Abutment
MSE Wall
PLAN
MSE Wall
ELEVATION
Coping
MSE Wall
Berm
SECTION
MSE WALL

Figure 3.8.1D

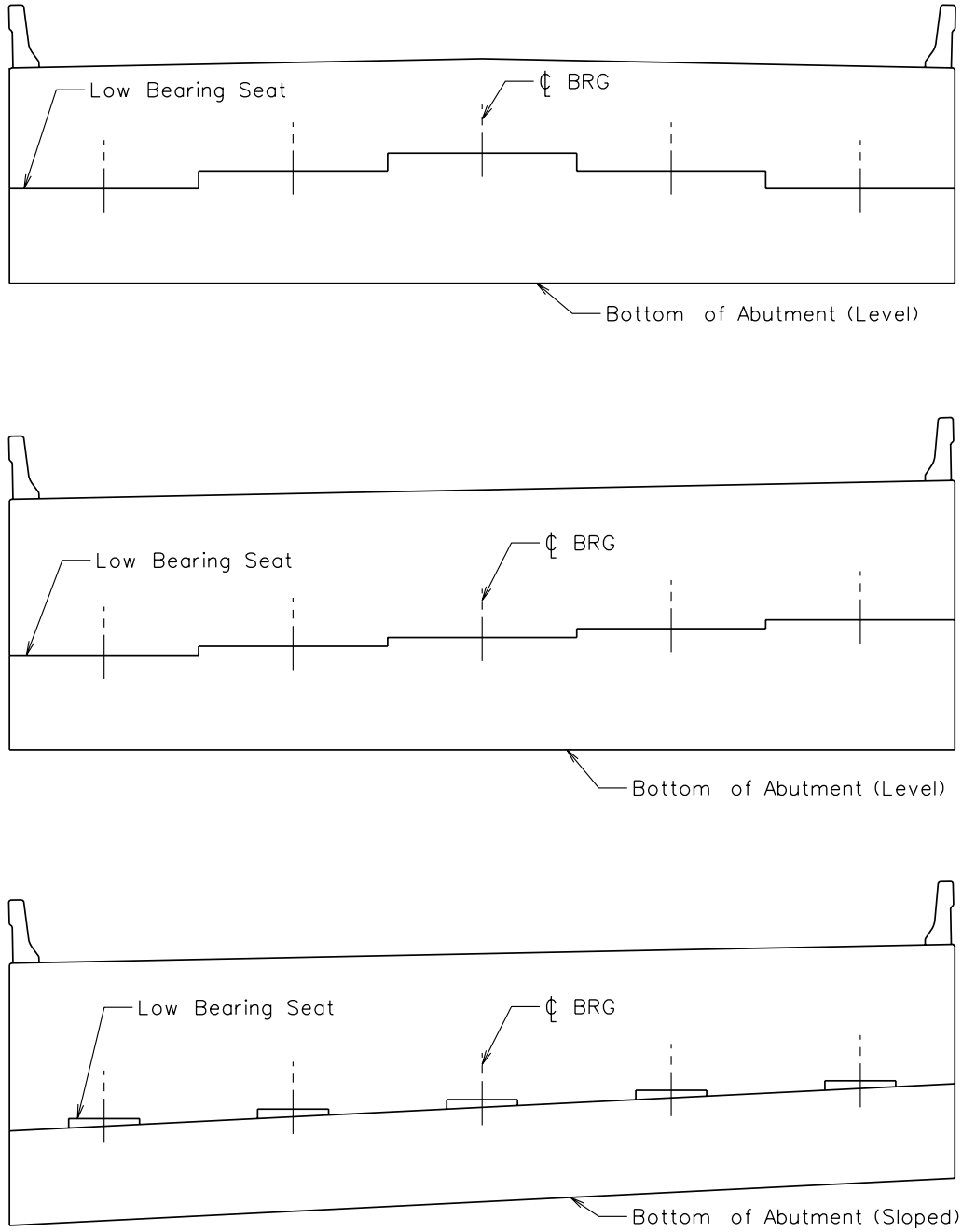

BRIDGE SEATS

Figure 3.8.2

When the beam longitudinal grades are less than 2%, the beam seats shall be sloped parallel to the beam grades. Otherwise, the beam seats shall be level to true elevation. The bridge seat elevations at the centerline of bearing shall be shown on the plans.

Minimum reinforcement shall be according to the Governing Specifications. The bearing area under each beam may be subjected to very large localized compressive and shearing stresses. Additional reinforcement directly under the bearing may be necessary to prevent the formation of visible cracks or possible spalling. This additional reinforcing may be required for beam seats that are stepped 4 IN or more or when the standard reinforcing is not sufficient to prevent cracking or spalling.

3.8.3 Backwalls

A backwall shall be provided on all bridges to retain the embankment behind the bridge, support the approach slab (if applicable) and to protect the bridge seat from water intrusion. However, with the approval of the Director of Engineering Division, some prestressed box beam bridges may not require the use of a backwall. The minimum thickness for a backwall shall be 1 FT. For backwall requirements on jointless bridges see Section 3.9.

A roughened horizontal construction joint shall be provided between the bridge seat and the backwall extending the entire width of the abutment. This construction joint may be optional for small abutments. Another method is to provide an optional construction joint 1 FT below the paving notch. Concrete above this joint shall not be placed until the deck slab is in place.

The roadway elevations at the face of the backwall shall be given on the plans.

3.8.4 Stem

The stem is a structure that retains the embankment behind the abutment and transmits the loads from the superstructure to the foundation. While there is no minimum thickness requirement, the stem thickness shall be designed to support the required loading and provide sufficient space for bearing devices.

Stems may be level, stepped or sloped based on bridge geometry (see Section 3.8.2).

3.8.5 Wingwalls

Wingwalls must be long enough to retain the roadway embankment based on the embankment slopes. The positioning of the wingwalls depends on the site itself (e.g., cut vs. fill, etc.). The Designer must study the existing and proposed contours and determine which type of wingwall best fits the site. Approach roadway slopes must be considered.

Generally, an embankment slope of 2:1 is used. When this is not possible, 1½:1 may be acceptable, with approval of the Bridge Project Manager. Wingwalls may be placed parallel to the roadway, at some angle or on the same alignment as the centerline of abutment bearings.

The following calculations and Figure 3.8.5 are representative examples of how to determine wingwall lengths. The Designer must consider the requirements stated above when laying out wingwalls and determining their length.

Calculation of wingwall lengths:

D	=	Distance from shoulder to berm
S	=	Embankment slope (S = 2 for a 2:1 slope)
q	=	Angle from backwall to wingwall
d	=	Width of bridge seat
WL	=	Wingwall length

Wingwalls where $q > 90^{\circ}$ (right wingwall in Figure 3.8.5):

$$\mathrm{WL} = \frac{\mathrm{D\,(S)}}{\cos(q - 90)} - d + 1\,FT$$

Wingwalls where $q \leq 90^{\circ}$ (left wingwall in Figure 3.8.5):

$$\mathrm{WL} = D\,(S) - d + 1\,FT$$

Wingwalls shall be designed as horizontal cantilevers when supported by the abutment or as vertical cantilevers if they are supported by a foundation. The minimum thickness of a wingwall supporting a barrier shall be the base thickness of the barrier in question and designed for strength; otherwise, it shall be 1 FT.

A vertical construction joint may be required between the wingwall and abutment. The need for a construction joint is determined based on size and configuration. There are situations where the wingwall is a separate structure from the abutment. This requires an expansion seal or other expansion material between the two components.

3.8.6 Foundation

Abutment and wingwall foundations shall be designed and located as specified in Section 3.12, FOUNDATIONS.

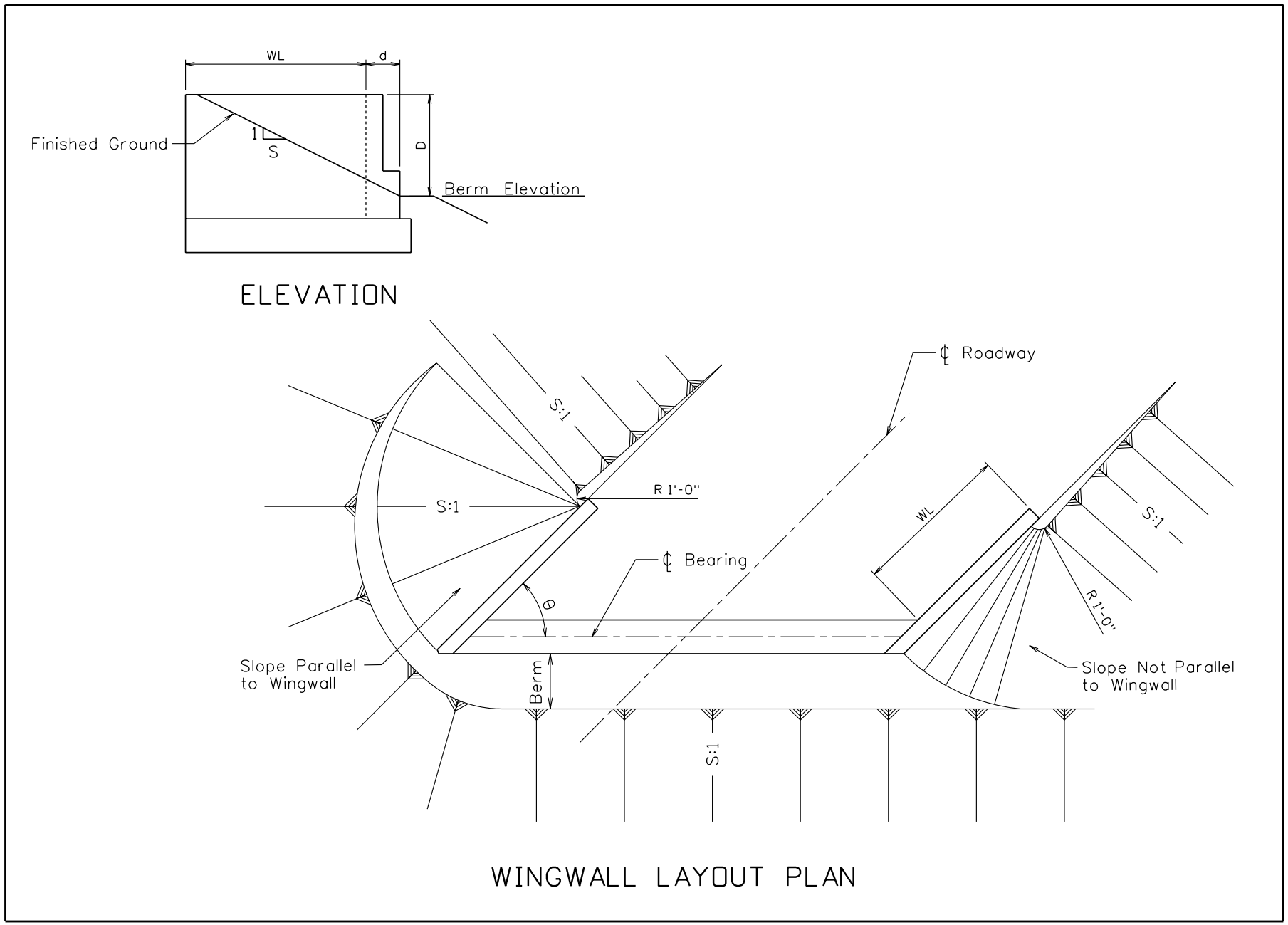
WL
d
Finished Ground
1
S
D
Berm Elevation
ELEVATION
℄ Roadway
S:1
R 1'-0"
S:1
WL
S:1
℄ Bearing
θ
R 1'-0"
Slope Parallel
to Wingwall
Berm
Slope Not Parallel
to Wingwall
S:1
WINGWALL LAYOUT PLAN

Figure 3.8.5

3.9 JOINTLESS BRIDGE ABUTMENTS

Fully integral and semi-integral abutments shall be used whenever possible to eliminate deck expansion joints (see Figures 3.9A thru 3.9E). Integral abutments shall be used when the anticipated movement is 2 IN or less and the skew is 30º or less. If the grade exceeds 5%, the lower grade abutment for a single span bridge shall be fixed and for a multi-span configuration, the pier(s) or lower abutment shall be fixed. Semi-integral abutments may be used for instances that are not appropriate for integral abutments. Both types are assumed to be pinned and shall be designed in accordance with the following guidelines.

3.9.1 Integral Abutments

Approach slabs are required for all integral abutments having a total anticipated thermal movement exceeding ½ IN, or those conditions described in Section 3.14. The approach slab shall be anchored to the abutment by reinforcing steel bars. The approach slab shall not be anchored to the wingwalls and to reduce friction, filter fabric shall be placed over the base course prior to placing the approach slab.

Provide expansion joints for utilities, sidewalks, concrete barriers, guardrail and other roadway features that pass over integral abutments onto the approach roadway.

Construct a Type H joint (Standard Detail Sheet PVT2) between the approach slab and pavement to accommodate thermal movement when using flexible approach pavement. Rigid approach pavements require a Type B joint (Standard Sheet PVT1) between the approach slab pavement for movements up to ¼ IN and a Type J joint (Standard Sheet PVT5) for movements greater than ¼ IN.

To reduce cracking in integral abutments, a closure pour consisting of the backwall and an adjacent "X" FT minimum of deck shall not be placed until all other deck pours have been placed. The distance "X" is equal to 0.5 FT + the effective slab length (distance between beam quarter points, in feet) measured from the front face of the abutment.

To reduce the effects of passive earth pressure, use loose (non-compacted) select material for backfilling when thermal movements at integral abutments exceed ½ IN. The design must provide for adequate drainage of the backfill.

Abutment diaphragms or cross frames are not required for superstructures with integral abutments. If required for construction stability, temporary bracing may be placed adjacent to the abutment and removed after the concrete has cured. Sufficient clearance between the abutment and temporary bracing shall be maintained to provide adequate room for the construction of the abutment backwall. Bearing stiffeners are required on steel superstructures.

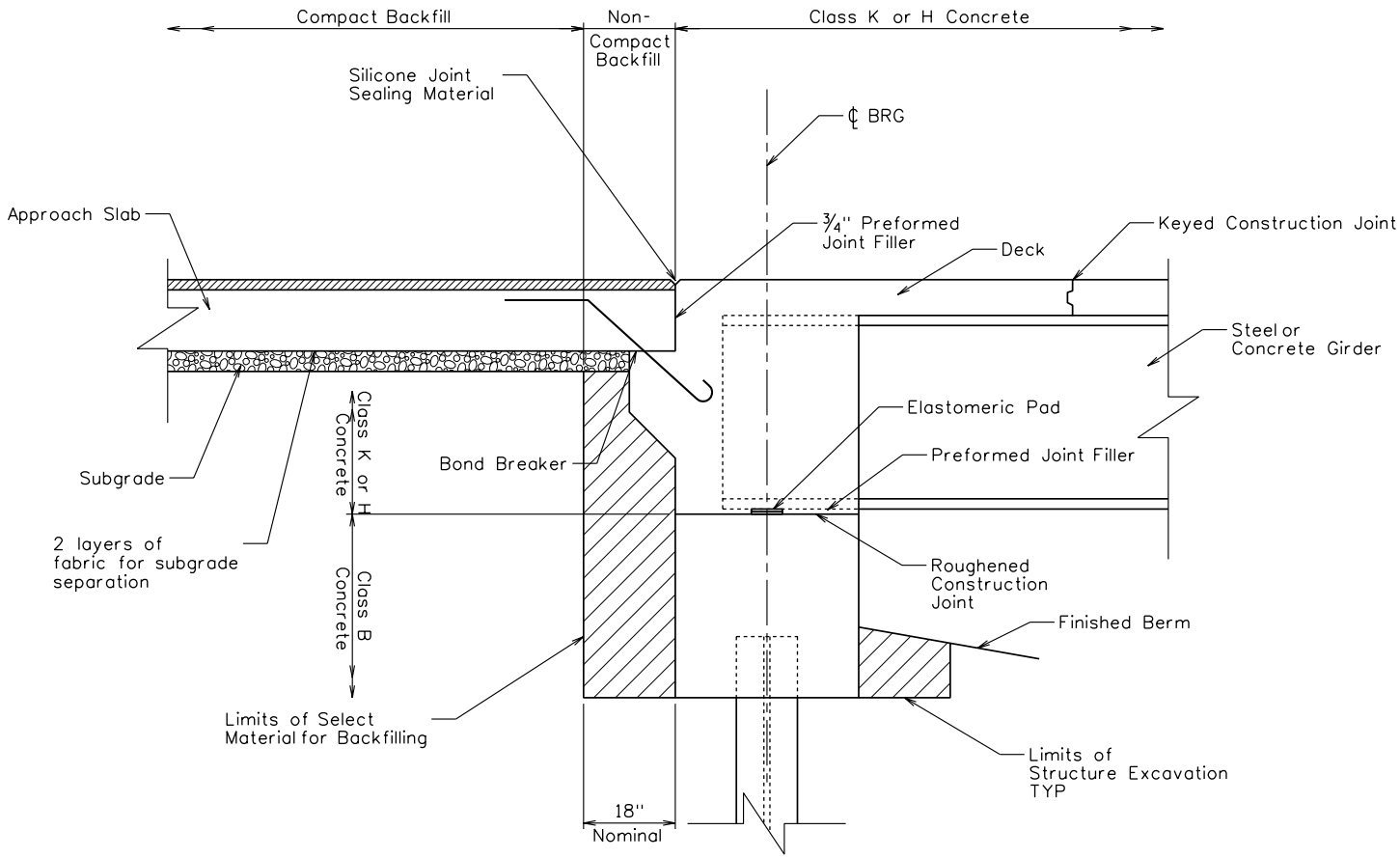

INTEGRAL ABUTMENT FOR DECK-GIRDER SYSTEM
(WITH APPROACH SLAB)

Figure 3.9A

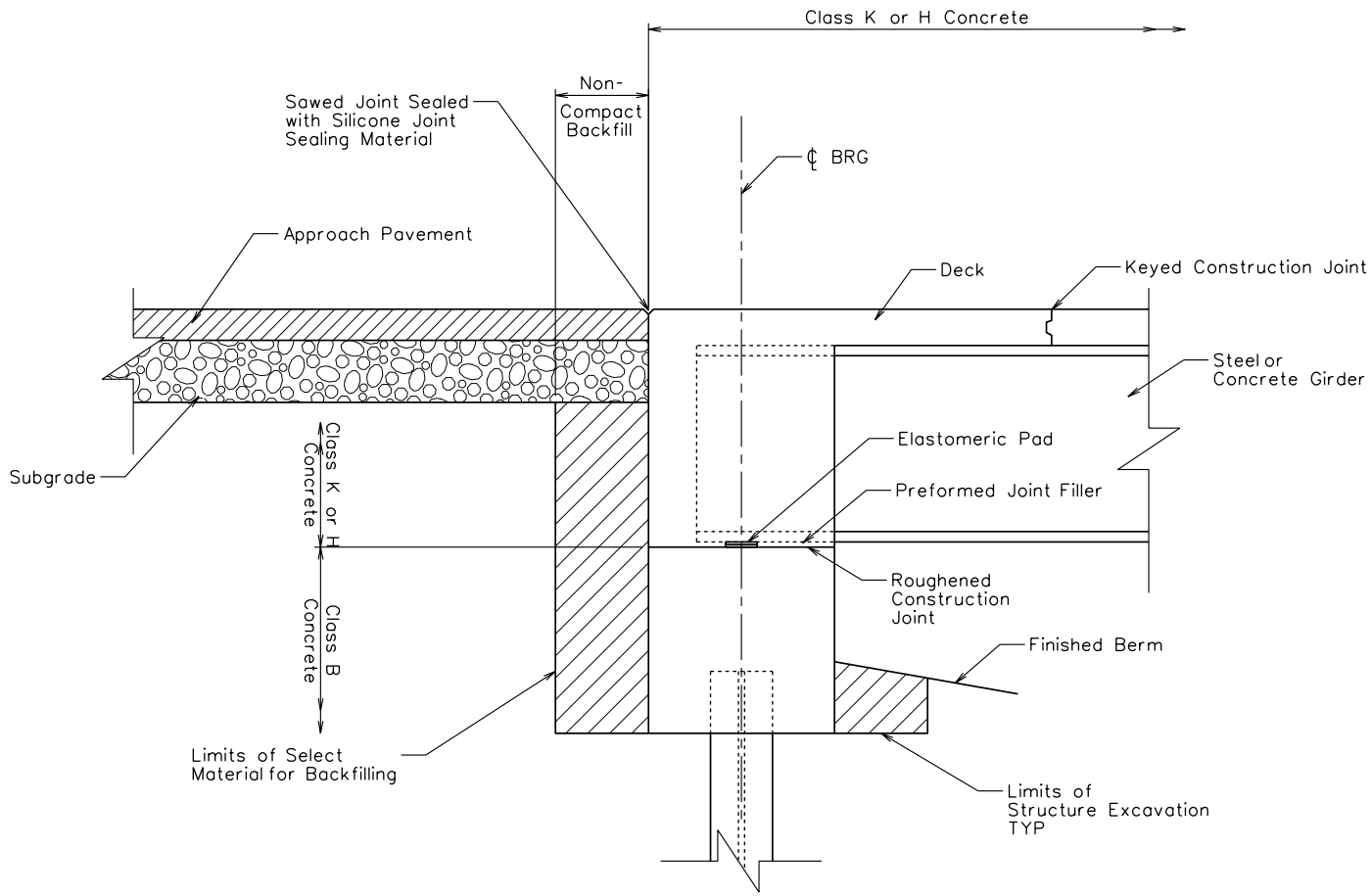

INTEGRAL ABUTMENT FOR
DECK-GIRDER SYSTEM
(WITHOUT APPROACH SLAB)

Figure 3.9B

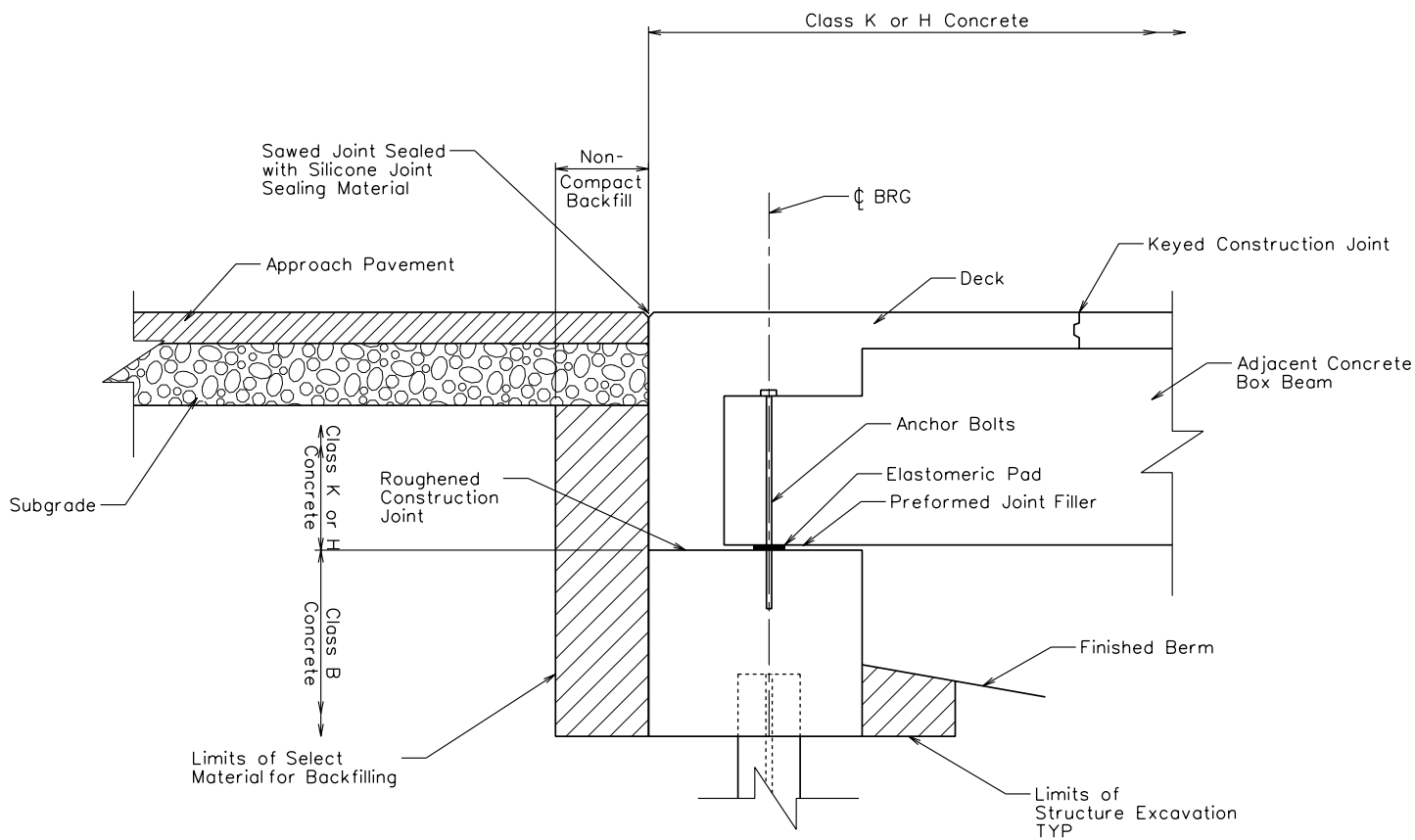

INTEGRAL ABUTMENT FOR
ADJACENT CONCRETE BOX BEAMS
(WITHOUT APPROACH SLAB)

Figure 3.9C

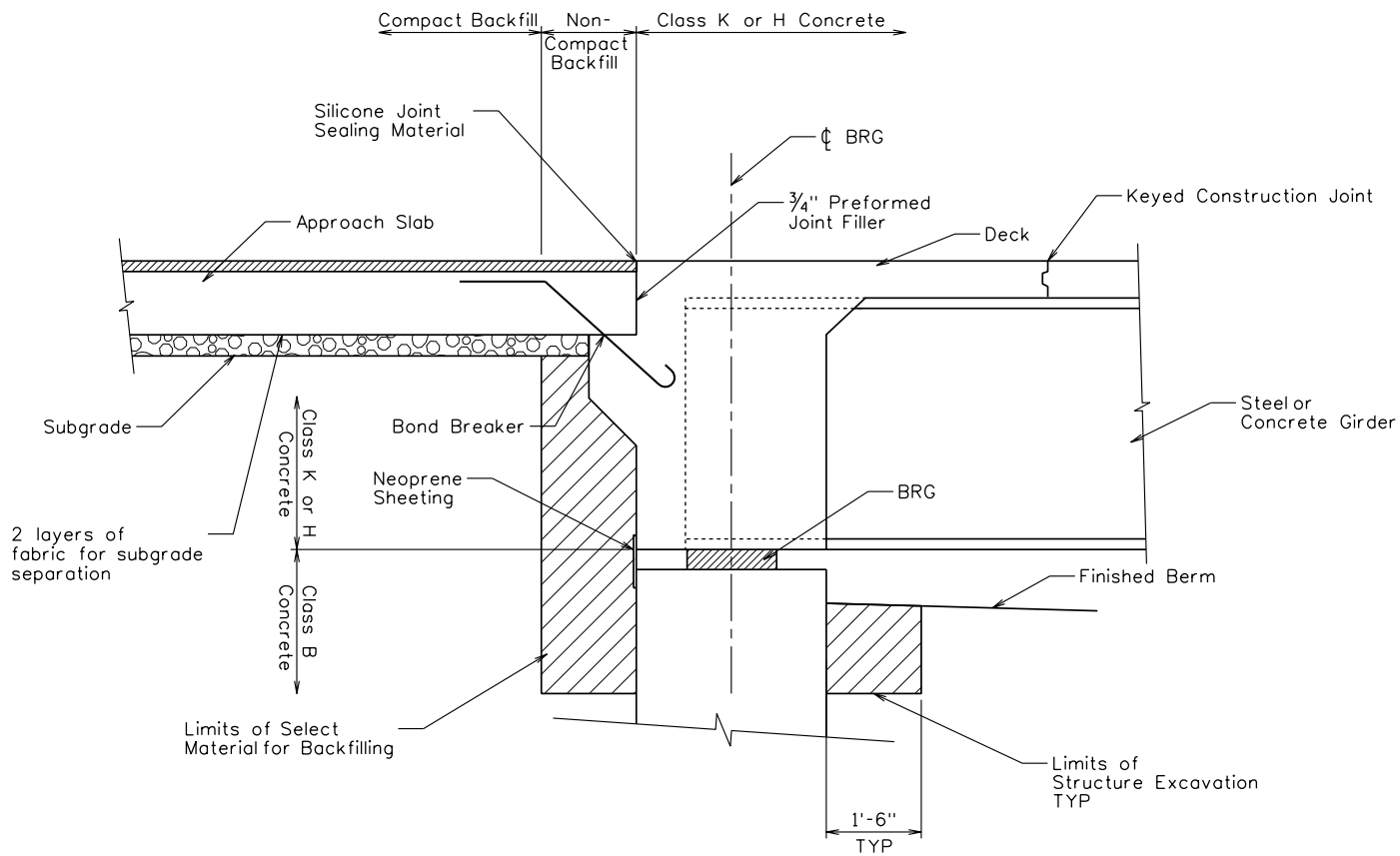

SEMI-INTEGRAL ABUTMENT FOR DECK-GIRDER SYSTEM
(WITH APPROACH SLAB)

Figure 3.9D

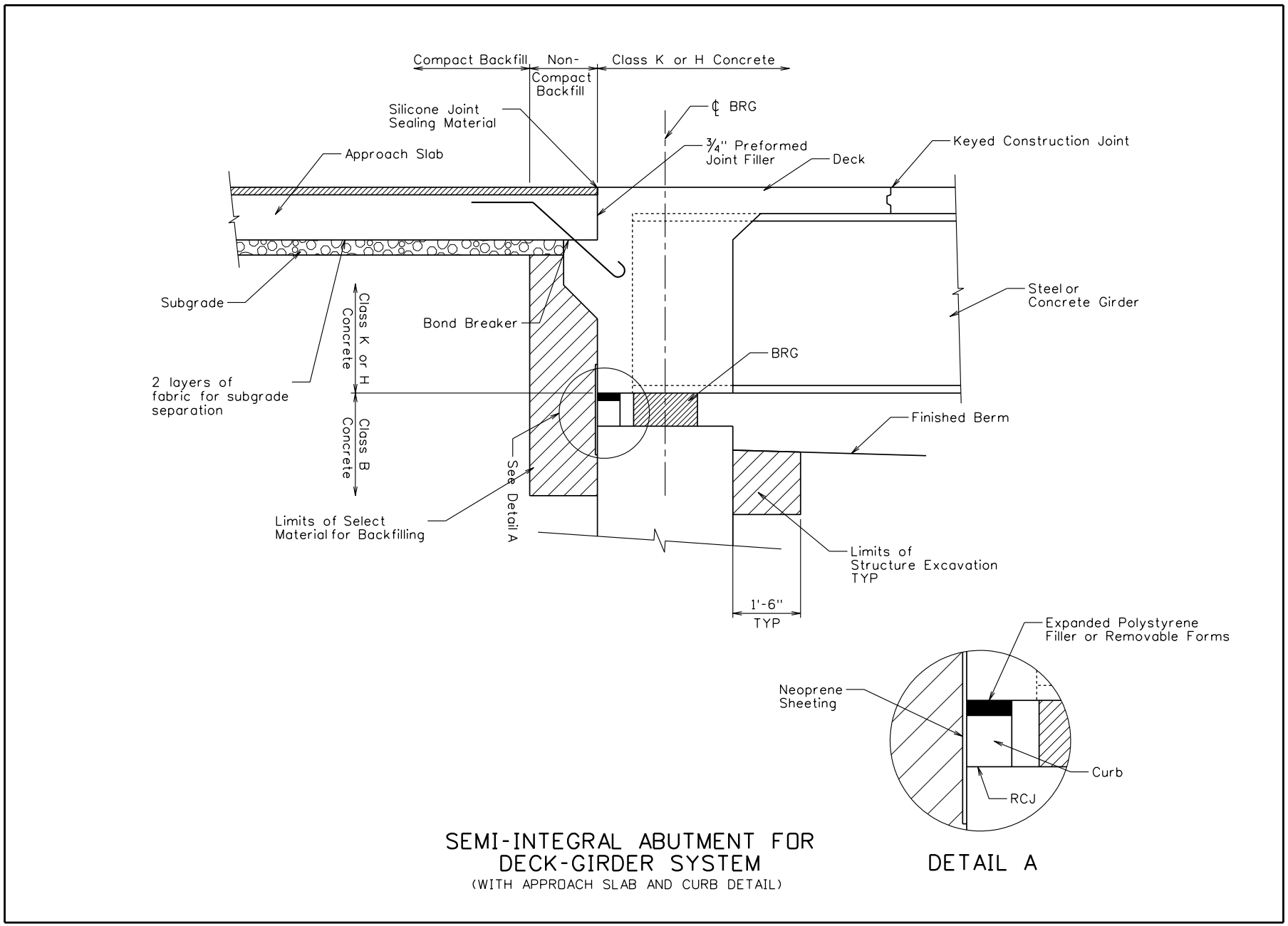
Compact Backfill
Non-Compact Backfill
Class K or H Concrete
Silicone Joint Sealing Material
℄ BRG
¾" Preformed Joint Filler
Keyed Construction Joint
Approach Slab
Deck
Subgrade
Class K or H Concrete
Bond Breaker
Steel or Concrete Girder
BRG
2 layers of fabric for subgrade separation
Finished Berm
Class B Concrete
See Detail A
Limits of Select Material for Backfilling
Limits of Structure Excavation TYP
1'-6" TYP
Expanded Polystyrene Filler or Removable Forms
Neoprene Sheeting
Curb
RCJ
SEMI-INTEGRAL ABUTMENT FOR DECK-GIRDER SYSTEM
(WITH APPROACH SLAB AND CURB DETAIL)
DETAIL A

Figure 3.9E

The beam seat shall be sloped parallel to the beam grade for integral abutments.

Integral abutments shall be designed using a single row of piling. Wingwalls requiring more support than that available from the integral abutment shall be structurally isolated.

The following parameters apply to integral abutments:

- Piling shall be a single row and aligned so that the webs are parallel to the centerline of bearing.
- Piling shall be embedded into the abutment at least 1.0 FT unless the analysis requires more.
- The distance from the side of any pile to the nearest edge of the abutment shall be greater than 9 IN.
- Piling lengths of 10 FT (minimum) to 15 FT shall be predrilled to the top of rock. Piling lengths greater than 15 FT shall be predrilled a minimum of 15 FT. Pre-drilling is in accordance with Section 616 of the Standard Specifications. Pile points are permitted to facilitate pile driving, but are not considered a substitute for pre-drilling integral abutment piling.
- Wingwalls supported by the abutment shall be limited to 6 FT for straight wings and 12 FT for U-wings.

3.9.2 Semi-Integral Abutments

Semi-integral abutments may be used where foundation sites rule out the use of an abutment on a single row of piles, while retaining full integrity with the superstructure.

Consideration must be given to the following:

- When full height U-shaped wingwalls are used, provisions shall be made to allow for thermal expansion of the superstructure without interference from the wingwalls.
- The Designer must account for these items:
  - Uplift resulting from the span arrangement
  - Buoyancy
  - Excessive grade; greater than 5%
  - Potential roadway settlement
- Seal between the abutment seat and cap to retain the backfill and for waterproofing. Add a full-length curb to the top of the semi-integral stem to help retain the backfill when the bearing height exceeds 1 ½ IN (see Figure 3.9E).

When the beam longitudinal grade is less than 2%, the beam seat shall be sloped parallel to the beam grade. Otherwise, the beam seats shall be level to true elevation.

3.10 RETAINING WALLS

Retaining walls are used to control fills and may be used in cut situations. They may be necessary due to the geometric constraints of a roadway or as a measure against erosion. Typically, retaining walls are utilized to transition the roadway grade around bridge abutments to the embankment or side slopes of the obstacle being spanned by the bridge. The height of the fill being retained mandates the type of retaining wall to be designed.

The selection and design of the appropriate retaining wall system is an integral part of the structural design of highway projects. Proper application of retaining system type and the use of proprietary retaining systems requires guidance and advance approval of the wall types and their manufacturers.

The decision to select a particular retaining wall system for a specific project requires an evaluation based on cost-effectiveness, practicality of construction, slope and structural stability, aesthetics and environmental consistency with its surroundings.

The most common types of retaining wall systems are gravity, cantilever, mechanically stabilized earth (MSE) walls, pile and tie-back (anchored) walls. Gravity, cantilever, pile and tie-back walls are considered conventional retaining walls.

MSE walls are proprietary walls. This wall type requires the designer to complete certain design elements (e.g., external and global stability) and the wall supplier to complete other design elements (e.g., internal stability). MSE walls will typically be chosen from a list of pre-approved suppliers or manufacturers.

The following shall serve as a guide to illustrate the selection process.

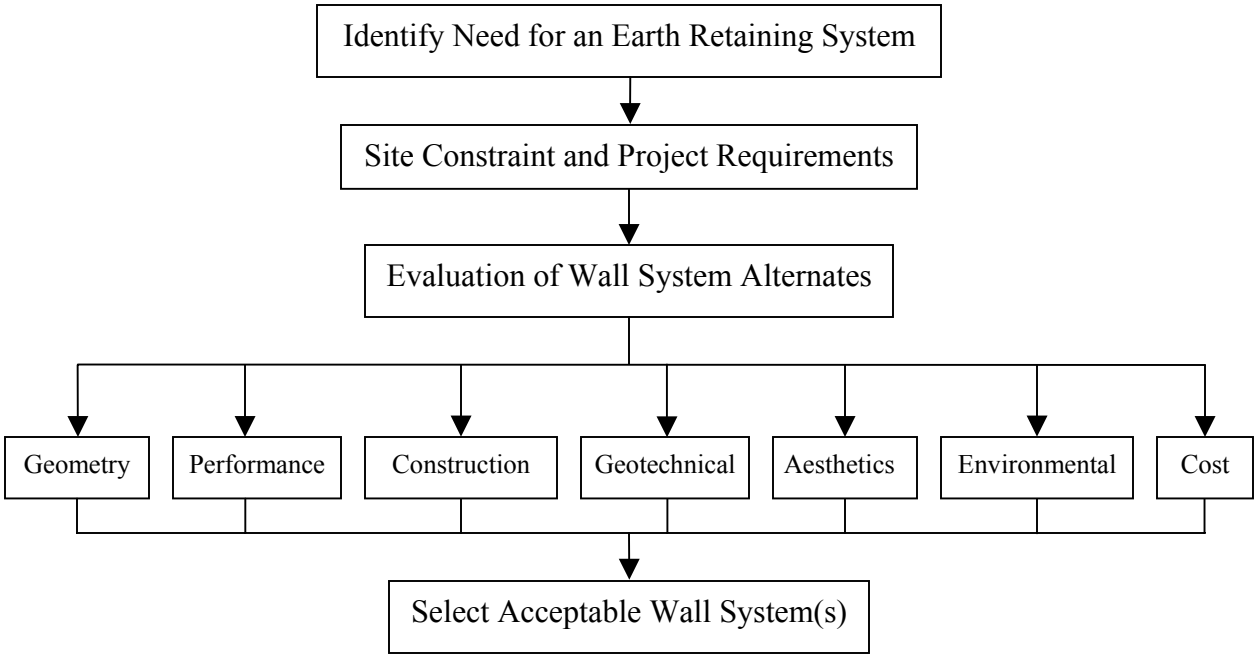

3.10.1 Retaining Wall System Selection Process

3.10.1.1 Identify Need for an Earth Retaining System

A decision on the permanency of the wall system is to be made. If sufficient right-of-way (ROW) is available, a stable soil slope may be constructed thus eliminating the need for a wall system.

3.10.1.2 Site Constraints and Project Requirements

Items affecting the wall selection can be gathered during a preliminary site review and can include the following:

- Site accessibility and space restrictions that may include: limited ROW and headroom, availability of on-site storage for wall materials, access for specialized construction equipment, and restrictions on traffic disruption.
- Maximum estimated wall height.
- Location of underground utilities and nearby structures.
- Aesthetic requirements imposed by project surroundings.
- Environmental concerns including permitting requirements and encroachment on existing waterways (scour).

Based on these items, several wall systems may be eliminated from consideration while others may be recommended for further consideration. Insight on subsurface conditions may also be gained based on site investigations.

3.10.1.3 Evaluation of Wall System Alternates

The remaining wall systems shall then be evaluated. This involves a more detailed study based on cost, design, performance and construction. In addition to cost, the following specific factors shall be evaluated:

- Wall system geometry
- Performance requirements
- Constructability issues
- Aesthetic requirements
- Environmental concerns and requirements

Based on the above study, one or more of the remaining wall systems may be eliminated from further consideration. Finally, based on geotechnical information, cost estimates and project requirements, the preferred wall systems are then selected for further consideration.

3.10.1.4 Wall System Selection

Fill walls are generally constructed in conjunction with fills such as bridge approach embankments. Cut walls are generally constructed in situations where the finished grade will be substantially below the existing grade or for bridge approaches in a cut situation. Table 3.10.1.4A and Table 3.10.1.4B are selection charts for fill and cut wall systems that are commonly used. These tables summarize the key selection factors and are modified from the FHWA publication, *Earth Retaining Systems* – FHWA-SA-96-038. Fill wall systems can be constructed in a cut situation; however, temporary shoring as well as space for excavation to construct the wall will be required.

Height ranges are given in the chart for various wall types but should only be used as a guide for economy. The WVDOH has certain height limitations on individual wall systems as discussed in Section 2.4.3.1.

3.10.2 Permanent Retaining Walls

3.10.2.1 Gravity Walls

Gravity walls come in many forms and are designed to resist overturning moments and horizontal sliding forces by their own weight. They shall be designed so that the resultant force acts within the kern of the section (within the middle third of the footing base). Two acceptable forms include un-reinforced concrete or cribbing walls (either timber or concrete). The backfill should be a free-draining granular soil to prevent water pressure build-up.

3.10.2.2 Cantilever Walls

The cantilever retaining wall is the most economical type of conventional retaining wall system and is widely used. They are comprised of a concrete stem and a base footing, which form an inverted "T". The wall is fully reinforced to resist applied loads. The design is based on the assumption that the base and stem are fixed at their junction and the stem acts as a cantilevered beam. The footing should be founded below the frost line. Cantilevered walls can be supported on spread footings, piles or drilled caissons depending on geotechnical recommendations. The stem may be tapered or straight, as the design requires. Drains should be located at regular intervals to prevent water pressure from acting on the back of the wall. Counterforts may be employed where needed to accommodate taller fills.

Wall Type	Perm.	Temp.	Cost Effective Height Range	Lateral Movements	Water Tightness	Advantages	Disadvantages
Sheet-Pile Wall (2)	X	X	Up to 16 FT	Large	Fair	• Rapid construction • Readily available	• Difficult to construct in hard ground or through obstructions
Soldier Pile/ Lagging wall	X	X	Up to 16 FT	Medium	Poor	• Rapid construction • Soldier Piles can be drilled or driven	• Difficult to maintain vertical tolerance in hard ground • Potential for ground loss at excavated face
Tie-Back or Anchored Wall	X	X	15-60 FT (1)	Small – Medium	N/A	• Can resist large horizontal pressure • Adaptable to varying site conditions	• Requires skilled labor and specialized equipment • Anchors may require permanent easements

(1) For soldier pile and lagging wall only.
(2) Sheet-Pile wall can also be used in FILL situation as a temporary wall when feasible.

Table 3.10.1.4A - System selection chart for CUT walls

Wall Type (2)		Perm.	Temp.	Cost Effective Height Range	WVDOH Height Range	Differential Settlement Tolerance (1)	Advantages	Disadvantages
Concrete Gravity Wall				3-10 FT		1/500	• Durable • Requires smaller quantity of select backfill as compared to MSE walls • Concrete can meet aesthetic requirements	• Deep foundation support may be necessary • Relatively long construction time
Concrete Crib Wall		X		6-35 FT		1/300	• Does not require skilled labor or specialized equipment • Rapid construction	• Difficult to make height adjustments in field
Concrete Cantilever Wall		X		6-30 FT		1/500	• Durable • Requires smaller quantity of select backfill as compared to MSE walls • Concrete can meet aesthetic requirements	• Deep foundation support may be necessary • Relatively long construction time
Concrete Counterforted Wall		X		30-60 FT		1/500	• Durable • Requires smaller quantity of select backfill as compared to MSE walls • Concrete can meet aesthetic requirements	• Deep foundation support may be necessary • Relatively long construction time
MSE Wall (Precast Facing)		X		10-65 FT	0 – 60 FT	1/100	• Does not require skilled labor or specialized equipment • Flexibility in choice of facing	• Requires use of select backfill • Subject to corrosion in aggressive environment (metallic reinforcement)
MSE Wall (Wire Face)		X	X	6-50 FT	0 – 60 FT	1/60	• Does not require skilled labor or specialized equipment • Flexibility in choice of facing	• Facing may not be aesthetically pleasing • Geosynthetic reinforcement is subject to degradation in some environments
MSE Wall (Mod. Block)	Class I	X		6-23 FT	0 – 40 FT	1/200	• Does not require skilled labor or specialized equipment • Flexibility in choice of facing • Blocks are easily handled	• Requires use of select backfill • Subject to corrosion in aggressive environment (metallic reinforcement) • Positive reinforcement connection to blocks is difficult to achieve
	Class II				0 – 20 FT			
	Class III				0 – 10 FT			
	Class IV				0 – 5 FT			

(1) Ratio of the difference in vertical settlement between two points along the wall to the horizontal distance between points.
(2) Sheet-Pile wall can be used in FILL situations as a temporary wall if feasible.

Modular Block Walls have the following Classifications	
Class	Wall Type
I	HITEC approved systems
II	Soil Reinforcement has a positive connection to the Wall Face.
III	Soil Reinforcement has a friction connection to the Wall Face.
IV	Has no Soil Reinforcement

Table 3.10.1.4B – System selection chart for FILL walls

3.10.2.3 Pile Walls

There are two accepted types of pile walls: sheet pile walls and soldier pile walls. Sheet-pile walls consist of driven, vibrated, or pushed interlocking steel or concrete pile sections. The design theory assumes that the passive resistance of the soil in front of the wall plus the flexural strength of the sheet-pile effectively resists the lateral forces from the soil behind the wall.

Solder-pile walls are constructed of vertical steel H-piles with concrete or timber lagging between them. Its design theory is based on internal arching of the soil acting on the piles. The function of the lagging is to support the soil so that the arching effect is not interrupted. Soldier-pile walls can be constructed with tie-backs.

3.10.2.4 Tie-Back Walls (Anchored Walls)

Tie-back walls or anchored walls are non-gravity cantilever walls that rely on anchors for additional lateral support. An anchor or tie-back is a structural system engineered to transfer tensile loads from the earth to the wall. The principal disadvantage of tie-back walls is the anchoring devices. They must be carefully evaluated for corrosion resistance. The non-gravity wall may be either reinforced concrete or soldier-pile with lagging.

3.10.2.5 Proprietary Walls

Mechanically stabilized earth walls are considered proprietary walls. They consist of concrete facing units that are anchored to either steel reinforcing strips or steel bar mats to allow the loads to be transferred through shear to the concrete face. Generally, these walls are suitable for most applications under 30 FT in height. Situations that require taller walls may take advantage of a stepped MSE configuration. Various finish techniques can be called for in construction plans to meet aesthetic requirements. Contact a manufacturer for additional details. Refer to the WVDOH website for a list of approved MSE wall vendors (http://www.wvdot.com/10%5Fcontractors/aspl/626.htm).

The Manufacturer shall design the tiebacks and connections to resist the loads and accommodate the wall layout provided to them. Supply the following data to the manufacturer:

- Vertical geometry: a general cross-sectional sketch of the wall in relation to the traffic lanes
- Existing grade elevations at constant intervals or stations
- Finished grade elevations or top of wall elevations at constant intervals or stations
- Horizontal geometry: a plan view of wall and its relation to traffic lanes.
- Core borings

- Soil parameters
  - Unit weight (wet)
  - Angle of internal friction
  - Unit cohesion
  - Ultimate bearing capacity
  - Ph
- External loads and special conditions
  - Truck loads
  - Seismic condition
  - Traffic condition
    - Spread footings or abutments located in reinforced volume
    - Miscellaneous appurtenance loads such as coping requirements
- Location of potential obstructions to wall system components (e.g. piling, drainage structures, light poles, sign supports, etc.)

The contract plans for a bridge containing an MSE Wall shall refer to the system as the generic term "MSE" and allow for a competitive bid between the approved Manufacturers.

3.10.2.5.1 Concrete Panel

Facing panels are typically square, rectangular, hexagonal or cruciform in shape and employ either metallic or geosynthetic reinforcement that is positively connected to the panel to create a reinforced soil mass.

3.10.2.5.2 Modular Block

Modular block walls consist of vertically stacked, dry cast concrete blocks that employ geogrid, metallic grid or geotextile reinforcement. The reinforcement may be connected to the wall face through friction developed between vertically adjacent blocks or through the use of special connectors.

3.10.2.5.3 Wire Faced

Wire faced walls consist of continuous or semi-continuous layers of geotextile, geogrid or welded wire mesh laid down alternately with horizontal layers of compacted soil backfill. The wall facing can be constructed by wrapping each layer of reinforcement around the overlying layer of backfill, then re-embedding the free end into the backfill. Other systems have a panel facing that can be attached to the wire mesh.

3.10.2.5.4 Advantages and Disadvantages

The advantages of a MSE wall system are:

- Wall system construction is relatively rapid and does not require specialized labor or equipment.
- Limited foundation preparation is required.
- Concrete panel and wire faced wall systems are flexible and can accommodate relatively large total and differential settlements without distress. Modular block systems can accommodate relatively large settlements without distress.
- Reinforcement is light and easy to handle. Modular blocks are also light and easy to handle.
- Concrete panels permit greater flexibility in the choice of facing and architectural finishes.
- Modular blocks permit flexibility in the choice of sizes, shapes, weights, textures and colors, and can also adapt to sharp curves and significant front batter.

The disadvantages of a MSE wall system are:

- The wall system may not be economical for cut applications due to the additional cost associated with constructing temporary shoring to provide sufficient base width for construction.
- Wall systems require relatively large base widths.
- The use of metallic reinforcement requires that the backfill meet minimum electrochemical requirements for corrosion protection.
- The allowable load for geosynthetic reinforcement must be reduced to account for creep, durability and construction damage.
- Wire faced walls may not meet aesthetic requirements and the geotextile or geogrid life may be reduced due to exposure to ultraviolet light.
- Wall systems may not be appropriate for the following applications:
  - Where it may be necessary to gain future access to underground utilities.
  - At locations subject to scour.
  - Involving significant horizontal curvature (panel walls).
- Typically, wall systems are not cost-effective for temporary applications.

3.10.2.5.5 Designer Notes

- The Designer must analyze each wall system for external stability (e.g., sliding, overturning, bearing, global stability) according to the Governing Specifications. The wall manufacturer shall determine internal stability for MSE walls.
- The minimum embedment length of reinforcing for MSE walls shall not be less than 70% of the wall height. Shorter reinforcement lengths, but no less

than 8 FT, can be considered if smaller compaction equipment is used, facing panel alignment can be maintained, and minimum requirements for wall external stability are met.

- The bottom of all wall system footings or leveling pads shall be located below frost depth (minimum 36 IN for West Virginia). As an alternative, the soil within the depth and lateral extent of frost penetration below the wall may be removed and replaced with non-frost susceptible clean granular soil.
- MSE walls, under most circumstances, are the most economical choice of wall systems when compared to traditional gravity or cantilever type cast-in-place concrete walls. Since the list of approved MSE wall systems has increased, the need to have a CIP wall alternative on a project may not be necessary.
- A special design is required if the wall must support structure foundations, other retaining walls, noise walls, or other types of surcharge loads. The wall is considered to be supporting the surcharge load if the surcharge is located within a 1H:1V slope projected from the bottom of the back of the wall. For MSE walls, the back of the wall is considered the back of the soil reinforcement layers.
- When aesthetics govern, MSE walls should be held to a maximum height of 30 FT when possible. Limitations imposed on MSE wall systems by the WVDOH are based on a combination of technical evaluation report data, FHWA demonstration projects, NHI training course literature and taking into account human factors when dealing with tall structures and the traveling public.

3.10.3 Temporary Retaining Walls

Temporary walls may be required for some projects utilizing staged construction. They may also be necessary for extreme events where failures of slopes or existing walls occur and temporary measures are needed to maintain safety and service. Under these circumstances, temporary walls are subject to the same design requirements, including shop drawing review and approval as for permanent wall systems.

3.10.3.1 Example Drawings

Figures 3.10.3.1A thru 3.10.3.1D are representative examples of various retaining wall systems.

3.10.4 Shop Drawing Review

Retaining walls and their components that require shop fabrication are subject to shop drawing review and approval procedures (see Section 7).

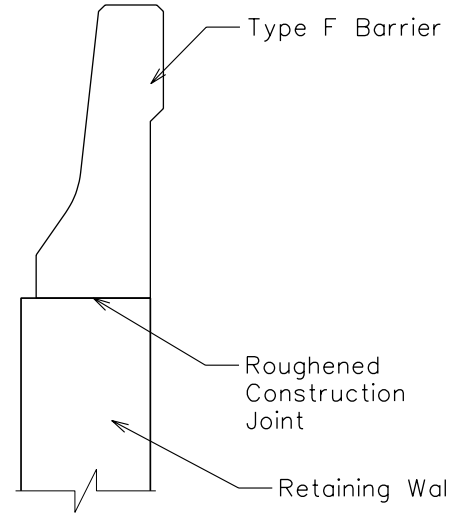

CAST-IN-PLACE WALL

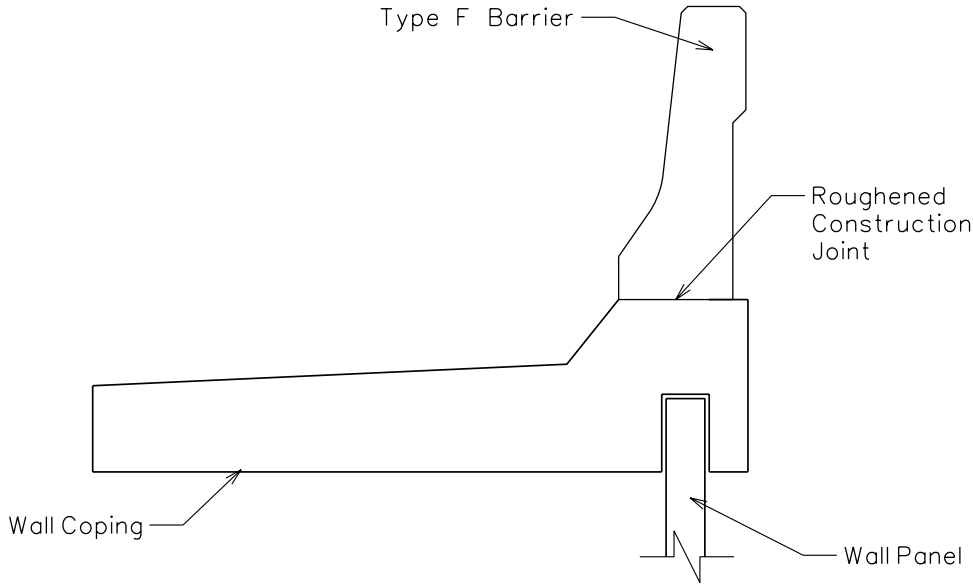

Note:
Provide 1/2" Expansion Joints in Barrier at 29'-6" centers. Joints must coincide with Coping Joints.

MSE RETAINING WALL

Figure 3.10.3.1A

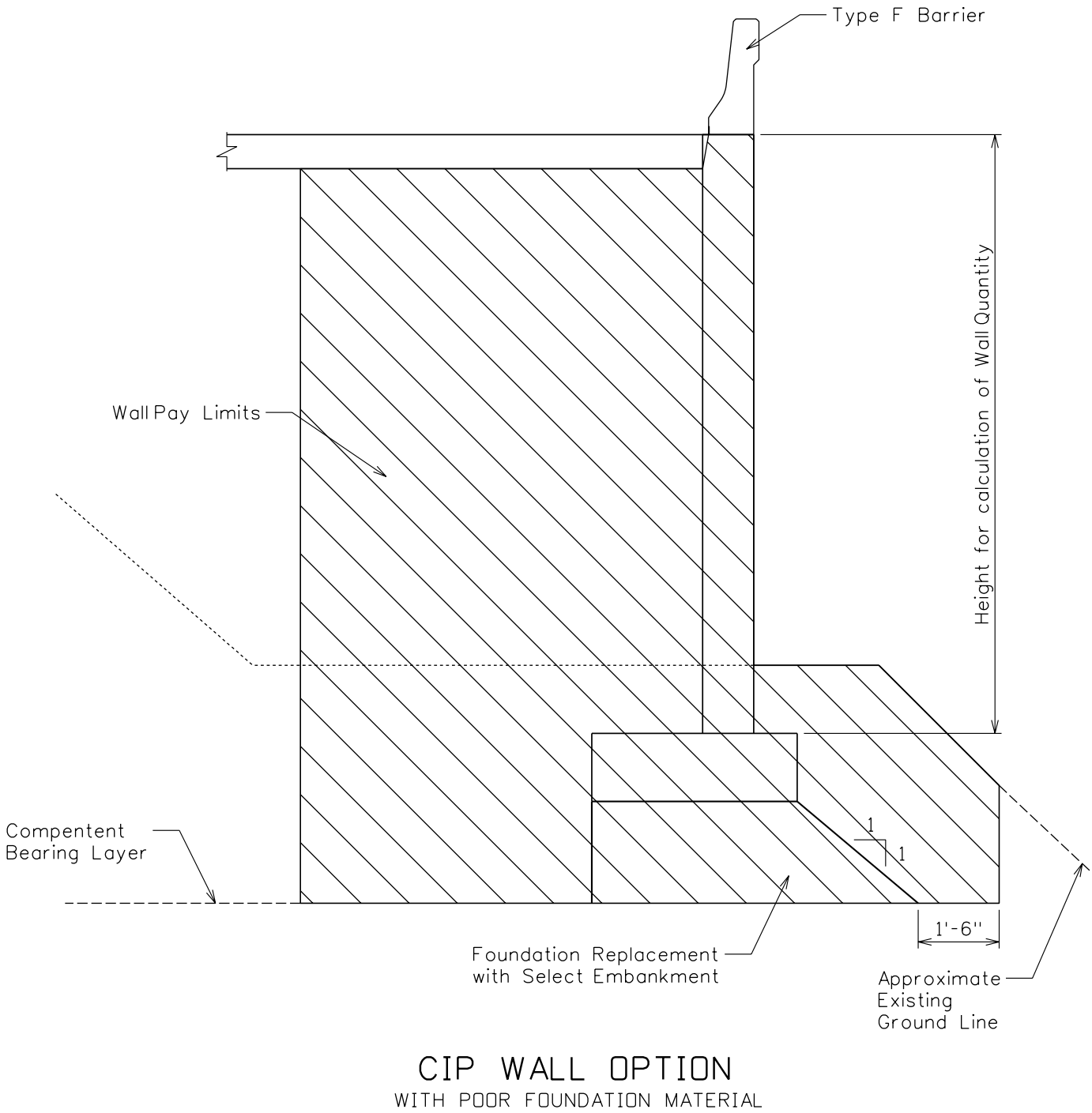

Figure 3.10.3.1B

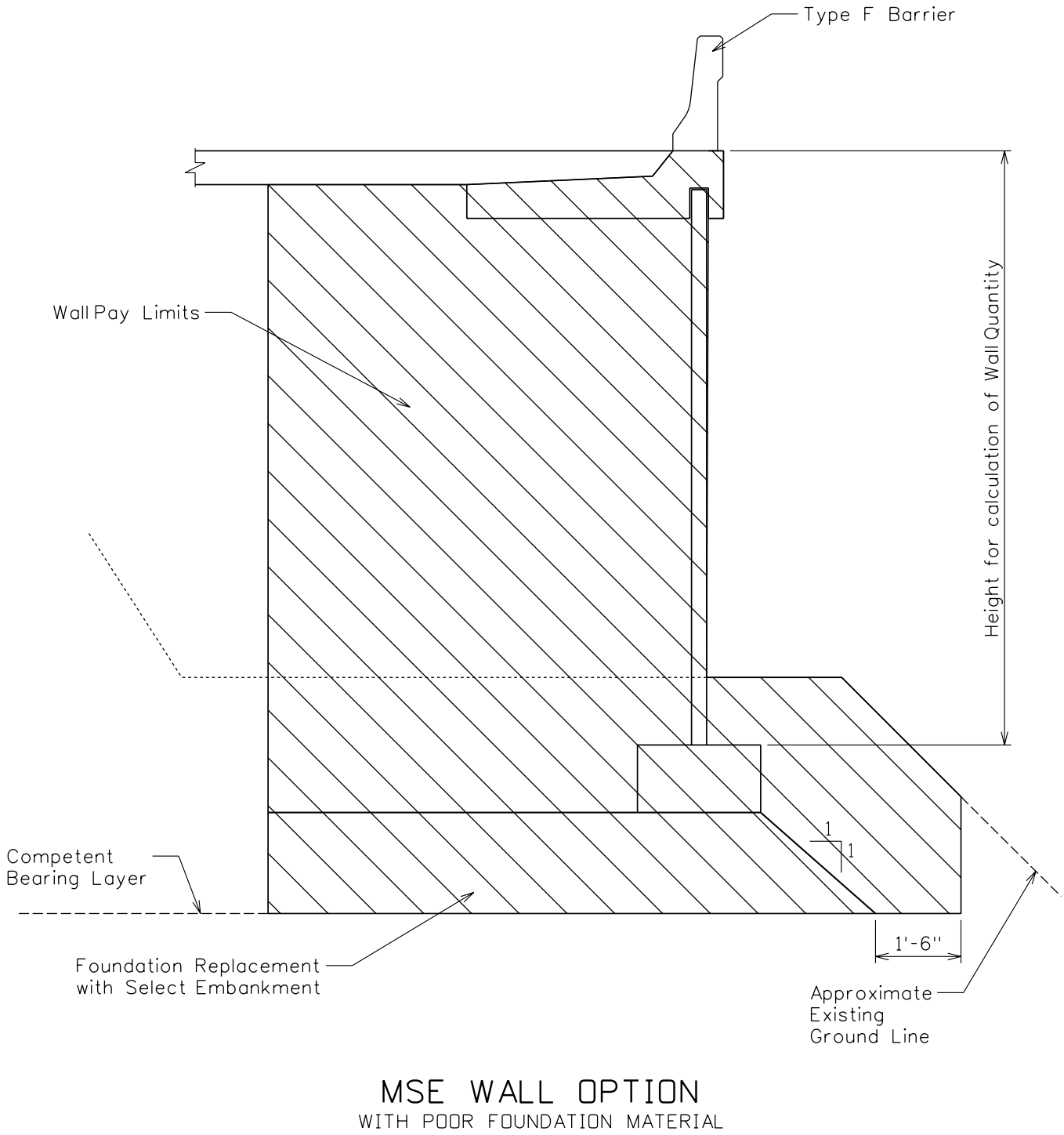

Figure 3.10.3.1C

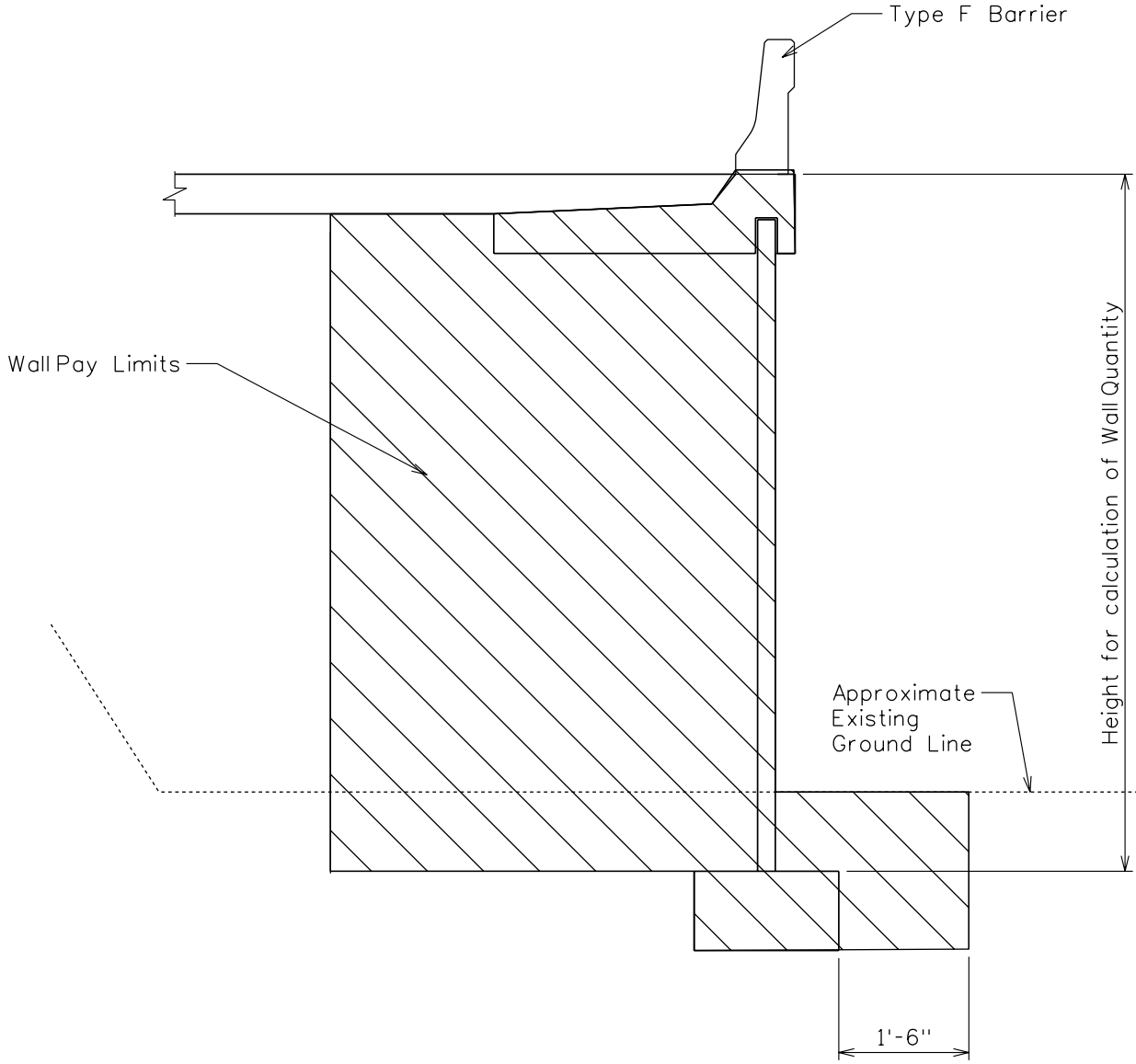

GENERIC MSE WALL
CONFIGURATION

Figure 3.10.3.1D

3.11 PIERS

Refer to Section 2.4.4 for a general description of various types of piers.

Class B Concrete with a compressive strength of 3000 PSI should be used for most piers. Class B Modified concrete with a compressive strength of 4000 PSI may be used, if required for strength.

For the strength and extreme event limit states, the Designer is strongly encouraged to use the strut and tie model for thick concrete elements (e.g., footings, pile caps and pier caps). Use this method to determine internal force effects near supports and points of concentrated loads.

Moment redistribution shall be used where appropriate.

3.11.1 Pier Caps

All pier caps must be wide enough to accommodate the bridge bearings and jacking points. The edge of the bearing masonry plates must be a minimum of three inches from the face of the pier cap. Instances of pier caps being wider than the column, necessitated by skewed bearings and dual bearings such as those found on prestressed concrete beam superstructures are acceptable.

Pier cap depths shall be determined by strength and clearance requirements. The minimum size is 3 FT vertically by 2.5 FT horizontally and must extend 1 FT beyond the fascia beam bearings. Pier caps are usually haunched in the region beyond the face of the exterior column or stem. Any pier cap longer than 4 FT beyond the face must be haunched. A 2:1 haunch ratio is preferred. The ends of the pier caps may be either plane vertically or shaped (i.e., cylindrical to mirror the columns).

Minimum horizontal reinforcement shall be #5 bars spaced at 12 IN. Rebar shall be placed to avoid anchor bolts.

Beam seats shall be stepped and finished level. The sloped stem option, per Section 3.8.2, is preferred when steps exceed 4 IN.

3.11.2 Pier Columns

The minimum longitudinal column diameter or stem thickness shall be 3 FT. Column tapers or section changes shall not be used unless a detailed study proves that they are cost-efficient. Generally, these forming costs are very high. Consider hollow shafts for piers in excess of 100 FT.

Multi-column piers should generally not be used in a flood plain. Single circular column, T-type or wall type piers may be used in the flood plain with rounded ends and shall be oriented parallel to the stream flow.

3.11.3 Pier Foundations

Pier foundations shall be located and designed as specified in Section 3.12, FOUNDATIONS.

3.12 FOUNDATIONS

3.12.1 General

Unless directed otherwise by the Director of Engineering Division, all substructures are to be founded upon bedrock; whether by spread footings, piles or drilled caissons. Only end bearing piles, either driven or predrilled and driven, are acceptable. Friction or combination friction and end bearing piles shall not be used.

The Geotechnical Report shall list design assumptions and recommend appropriate foundations. The Designer shall determine if the structure can accommodate the design assumptions (i.e., settlement, lateral movement, etc.).

3.12.2 Spread Footings

Spread footings shall be proportioned to distribute the total vertical and horizontal forces in such a manner that the required structural stability is obtained and that the allowable design bearing pressures are not exceeded.

Minimum thickness for a spread footing is 3 FT and shall be keyed into rock a minimum of 1 FT. Allowable bearing pressures shall be used to size the footing.

For grade separation structures, the top of the footing shall be a minimum of 1 FT and preferably 2 FT below the finished ground line. The top of the footing should be at least 1 FT below the bottom of any adjacent drainage ditch. Deeper footings may be necessary to found the spread footing on competent material. The Designer shall consider constructibility with regard to adjacent structures such as railroad tracks, existing foundations, etc. Cofferdams may be necessary to facilitate construction. The designer shall review railroad requirements to assure compliance.

For water crossing structures, the bottom of footings should be founded on competent bedrock. Unless directed otherwise, the top of the footing shall be located below the

anticipated scour event. An exception to placing the top of the footing below the scour event may be founding the footing in non-scourable bedrock. Non-scourable bedrock is defined as rock having a minimum RQD of 50% and is resistant to slaking, as determined by the Engineer. Cofferdams may be required for construction and shall be anticipated in the plans.

Due to the possibility of stream meander, footings placed in the overflow section of the water crossing shall be investigated to assure the footings will remain stable should the stream migrate.

3.12.3 Pile Foundations

In order to facilitate the driving of non-predrilled steel bearing piles the following minimum size of piles shall be specified:

- HP 10x42 for lengths up to 40 FT
- HP 12x53 for lengths between 40 and 80 FT
- HP 14x73 for lengths over 80 FT

The design may require larger piles, for the above lengths, based on vertical and/or lateral loads. The minimum piling length shall be 10 FT. The pile embedment is a minimum of 1 FT into the cap. The Designer shall verify the availability of any section and pile accessories necessary for construction. See Section 2.4.5.2 Piling, for additional information.

For water crossing structures, the top of the pile cap shall be placed below the anticipated scour event (see AASHTO 2.6.4.4.2).

Steel H piles, as a minimum, shall conform to the requirements of AASHTO M160, and M270, Grade 36. High strength steel piling such as Grade 50 may be used.

The Geotechnical Engineer shall determine the required bearing capacity and perform a drivability analysis to determine if the pile can be installed to the required elevation without damage. The Geotechnical Report should also recommend if pile tips are required.

Pile footings shall be proportioned to distribute the total vertical and lateral forces in such a manner that the required structural stability is obtained and that the allowable design bearing values are not exceeded. Minimum thickness for a pile footing is 3 FT. Generally, the pile footing should be designed so that no pile experiences uplift. If uplift is anticipated, the pile-cap connection shall be checked along with the pullout resistance of the pile.

The Designer shall check steel H piles as a structural column when determining the necessary pile size. This is especially critical for trestle type bents after the anticipated

scour event. If bracing is required, it shall be designed and detailed on the plans along with connection details.

The location of battered piles should be checked to ascertain that the piles remain within the right-of-way and do not interfere with piles from adjacent structures, existing substructure units nor conflict with portions of staged construction.

The Designer shall provide any special provisions that will be necessary for any load test required for the design.

In congested areas and/or areas adjacent to existing structures, vibration and noise during pile driving and predrilling shall be considered. The Designer shall recommend appropriate mitigation measures to the Bridge Project Manager. The Designer shall provide any special provisions regarding vibration and noise remediation.

For grade separation structures, the footing shall be designed and located as specified in Section 3.12.2.

3.12.4 Drilled Caisson Foundations

Drilled Caissons shall be designed in accordance with the Governing Specifications and shall accommodate both vertical and lateral loads. The rock socket shall extend below the anticipated scour depth and remain adequate to support the bridge, ignoring passive earth pressures.

If site conditions dictate that temporary casings may be uneconomical, the use of permanent steel casings should be considered. The Designer shall proportion the permanent steel casings, including wall thickness and material properties. The Bridge Project Manager shall approve the use of permanent steel casings.

The affect of drilled shaft construction on existing structures shall be considered, with appropriate mitigation measures.

In congested areas and/or areas adjacent to existing structures, vibration and noise during construction shall be considered, especially during installation of steel casings, both temporary and permanent. The Designer shall recommend appropriate mitigation measures to the Bridge Project Manager. If necessary, the Designer shall provide any special provisions regarding vibration and noise remediation.

The Designer shall provide any special provisions that will be necessary for any load test required for the design.

3.12.5 Slope and Foundation Protection

Foundation protection is the armoring of a bridge foundation, for protection from scour caused by moving water, as in the case of a stream channel crossing. Slope protection is the armoring of an embankment, for protection from erosion caused by surface runoff, in a grade separation crossing. If erosion is to be prevented, embankment and foundation protection must be anticipated, and the proper type and amount of protection must be provided. Slope protection may also be used in urban locations and on Interstates where aesthetics is a factor or where maintenance is impractical.

Section 218 of the Standard Specifications describes the types of slope and foundation protection and the construction methods for their installation.

3.12.5.1 Slope Protection

Slope protection is required at all bridge embankments. Slope protection shall be 8 IN crushed rock with confinement curbing. Confinement curbing is reinforced concrete curbing a minimum of 6 IN wide by 2 FT high used to retain the crushed rock slope protection on bridge embankments (see Standard Specifications).

Due to failures encountered with wire mesh baskets; gabions will no longer be used for slope protection.

If the Designer is confident that an abundance of adequate material exists, select embankment, meeting the requirements of the rock borrow specifications, may be specified for slope protection. Otherwise, rock borrow shall be specified on the plans.

The slope protection shall generally extend 3 FT beyond the outside limits of the superstructure fascias and from the toe of the slope to the abutment face. Slope protection is not required between dual structures when the distance between adjacent slope protection edges exceeds 10 FT, unless deemed necessary for aesthetic or maintenance purposes.

3.12.5.2 Foundation Protection

Foundation protection shall be used to protect bridge embankments, abutments and pier foundations from erosion and streambed scour at stream channel crossings. If the Designer is confident that an abundance of adequate material exists, select embankment, meeting the requirements of the rock borrow specifications, may be specified for foundation protection. Otherwise, rock borrow shall be specified on the plans.

Foundation protection design procedure shall follow the following Federal Highway Administration Publications:

- *Design of Riprap Revetment*, Hydraulic Engineering Circular No.11, (HEC 11)
- *Evaluating Scour at Bridges,* Fourth Edition, Hydraulic Engineering Circular No. 18, (HEC 18)

3.13 SCOUR

Scour potential shall be considered in all designs. Wherever necessary, adequate details shall be incorporated into the design and plans to minimize the effects of scour. All designs will be performed in accordance with the Federal Highway Administration Technical Advisory T5140.23, "Evaluating Scour at Bridges". A DS-34 form will be completed during the design phase of the project. Refer to WVDOH Bridge Maintenance Directive (BMD) S-102-2 for additional information regarding the DS-34 form.

For structures designed by a consulting engineering firm, the Consultant will submit the DS-34 form to the WVDOH at the time of submittal of the preliminary drawings. The Consultant Review Section will transmit the DS-34 form to the appropriate District Bridge Engineer who will submit a copy to the Highway Operations Division Evaluation Section at the time of the initial inventory of the bridge, when the new bridge is opened to traffic.

For structures designed by the Engineering Division In-House Design Section, the DS-34 form will be submitted to the appropriate District Bridge Engineer at the time of completion of the PS&E. The District Bridge Engineer will submit a copy to the Highway Operations Division Evaluation Section at the time of the initial inventory of the bridge, when the new bridge is opened to traffic.

For structures designed in the district office, a copy of the DS-34 form will be submitted with the TS&L or with the preliminary plans for review and approval by Engineering Division. A copy of the DS-34 form will be submitted to the Highway Operations Division Evaluation Section at the time of the initial inventory of the bridge, when the new bridge is opened to traffic.

It will be WVDOH policy to design new structures to be classified as having "no scour potential" or if it is classified as having scour potential, it will be classified as being "low risk". In this regard, item 23 of the DS-21 form should be coded as 5, 7, 8, 9 or N.

The section of the DS-34 form related to screening (Item 12 through Item 18) and the section on corrective action (Item 26 through Item 29) will not be required to be completed for a new structure.

Scour calculations are based upon the discharge created by the flood of 1% annual incidence of return (Q_{100}) and the "super flood" defined as 0.2% annual incidence of return (Q_{500}). Scour depth, average stone size (D_{50}) and any necessary designs shall be based upon the provisions of the following FHWA publications:

- *Design of Riprap Revetment*, Hydraulic Engineering Circular No.11, (HEC 11)
- *Evaluating Scour at Bridges,* Fourth Edition, Hydraulic Engineering Circular No. 18, (HEC 18)

Other publications considered relevant concerning the topic of bridge scour are:

- *Stream Stability at Highway Structures*, Third Edition, Hydraulic Engineering Circular No. 20, (HEC 20)
- *Bridge Scour and Stream Instability Countermeasures Experience, Selection, and Design Guidance*, Second Edition, Hydraulic Engineering Circular No. 23, (HEC 23)

3.14 APPROACH SLABS

3.14.1 General

Approach slabs shall be required on all bridges except those on State Local Service Roads with an ADT less than 500 and an ADTT less than 100. Integral abutment bridges may require approach slabs per Section 3.9.1.

3.14.2 Design

The approach slab length shall be a minimum of 20 FT measured along the centerline of the roadway or edge of pavement. The minimum width of the approach shall be from gutter line to gutter line of the bridge. The thickness of the approach slab shall consist of 12 IN of concrete topped with 2 IN of hot laid bituminous skid resistant overlay (14 IN total thickness).

3.14.2.1 Reinforcement

Longitudinal reinforcement shall consist of No. 5 bars spaced at 12 IN (top) and No. 8 bars spaced at 6 IN (bottom).

Transverse reinforcement shall consist of No. 5 bars spaced at 12 IN (top and bottom).

3.14.2.2 Joint Type Between Approach Slab and Approach Pavement or Bridge Transition Pavement

For integral bridges, a Type H joint (Standard Detail Sheet PVT2) is required to accommodate the thermal movement when using flexible approach pavement. Rigid bridge transition pavement requires a Type B joint (Standard Sheet PVT1) between the approach slab and the bridge transition pavement for movements up to 0.25 IN and a Type J joint (Standard Sheet PVT5) for movements greater than 0.25 IN.

Bridges with expansion joints require a Type H joint (Standard Detail Sheet PVT2) when the approach pavement is flexible and a Type A joint (Standard Sheet PVT1) when the bridge transition pavement is rigid.

3.14.2.3 Detailing

The approach slab detail sheet(s) included in the plans shall be an all-inclusive sheet(s) with pay items, quantities, and bar schedule. The items on this sheet are considered roadway pay items and are included in the roadway summary and estimate of quantities.

3.15 LOAD RATING OF NEW BRIDGE DESIGN

For new bridge design, no Strength II (evaluation permit vehicle) load cases are to be used; however, the Designer shall load rate each bridge. Load rating analysis shall be performed for all new bridges using the LFD Method found in the *AASHTO Manual for Condition Evaluation of Bridges 1994, 2nd Edition*, (Manual for Condition Evaluation) which is based on the AASHTO Standard Specifications. For tangent structures, the live load distribution factor shall be the ones used in the design, which are based on LRFD specifications. The bridge should be rated for the H, HS, 3S2, and Type 3 vehicles and the results shall be presented in a load-rating table in the final bridge plans.

The bridge load rating analysis using the LFD Method shall be performed concurrent with the beam/girder final design to assure proper design and adequate rating. The target ratings for new bridge design, shall be as follows:

- HS25 for bridges designed using AASHTO Standard Specifications (curved structures) and
- HS20 for bridges designed using Governing Specifications (tangent structures).

If the rating of bridges designed using the LRFD Specifications is less than the target value, and the design is found to be adequate, contact the Bridge Project Manager

immediately to determine what actions are to be taken before proceeding further with the final design and detailing.

The Designer shall state in the plans when redistribution of negative moments is utilized, for use in the permit rating of the bridge (see AASHTO 4.6.4.1).

3.15.1 Rating Computations

Rating computations shall be made to determine the inventory rating (IR) and operating rating (OR) for the H, HS, 3S2 and Type 3 rating vehicles. For permit vehicles, an inventory rating is not required.

The original rating computations will be included with the design calculations and shall clearly identify the following information:

- Design methodology – LFD or LRFD.
- Method of analysis – line girder analysis, grid analysis or finite element analysis.
- Method used for calculation of live load distribution factors.
- Table of applicable load factors.

Load rating shall be computed using the following general rating equation:

$$RF = \frac{C - A_1 D}{A_2 L(1 + I)}$$

Where:

RF	=	the rating factor for the live-load carrying capacity
C	=	the capacity or the strength of the member
D	=	the dead load effect on the member
L	=	the live load effect on the member
I	=	the impact factor to be used with the live-load effect
A_1	=	factor for dead loads = 1.3
A_2	=	factor for live loads = 2.17 for inventory rating and 1.3 for operating rating

The rating factor (RF) multiplied by the rating vehicle in tons gives the load rating of the bridge in tons. The rating calculations shall clearly show the total inventory and operating capacity of the structure in tons.

3.15.1.1 Tangent Structures – Steel Beams and Girders

For non-hybrid steel girders, the nominal capacity (C) is summarized in Appendix C of the Manual for Condition Evaluation. For hybrid steel girders, C shall be calculated using the LFD provisions of the AASHTO Standard Specifications. At all critical sections, the rating shall be calculated for both moment and shear capacities. It should be noted that since the shear capacity is a function of web size and stiffener spacing, additional check points may be needed for checking the shear ratings.

3.15.1.1.1 Flexural Strength Rating

The flexural strength of a member at a particular location depends on several factors such as, whether the section is composite or non-composite, compact or non-compact, and the spacing of lateral bracing in the negative moment region. For example, for composite positive moment sections in simple spans or in continuous spans with compact negative moment pier sections, the moment capacity shall be calculated based on Section 10.50 of the AASHTO Standard Specifications and the rating factors shall be calculated using the following equations:

$$\mathrm{IRF} = \frac{\mathrm{M_u} - 1.3(\mathrm{M})_{\mathrm{DL1}} - 1.3(\mathrm{M})_{\mathrm{DL2}}}{2.17(\mathrm{M})_{\mathrm{LL+I}}}$$

$$\mathrm{ORF} = \frac{5}{3}\mathrm{IRF}$$

Where:

IRF	=	inventory rating factor based on flexure
ORF	=	operating rating factor based on flexure
M_u	=	maximum bending strength of the member
$(\mathrm{M})_{\mathrm{DL1}}$	=	unfactored moment in the member due to non-composite dead load
$(\mathrm{M})_{\mathrm{DL2}}$	=	unfactored moment in the member due to superimposed dead load
$(\mathrm{M})_{\mathrm{LL+I}}$	=	unfactored moment in the member due to rating vehicle including impact

The bending strength of non-compact composite sections is best described in terms of stress in lieu of moment and the rating factors shall be calculated using the following equations:

$$\mathrm{IRF} = \frac{\mathrm{F_{bn}} - 1.3(\mathrm{f_b})_{\mathrm{DL1}} - 1.3(\mathrm{f_b})_{\mathrm{DL2}}}{2.17(\mathrm{f_b})_{\mathrm{LL+I}}}$$

$$ORF = \frac{5}{3} IRF$$

Where:

F_{bn}	=	nominal bending stress capacity of the member
$(f_b)_{DL1}$	=	bending stress in the flange due to non-composite dead load
$(f_b)_{DL2}$	=	bending stress in the flange due to superimposed dead load
$(f_b)_{LL+I}$	=	bending stress in the flange due to rating vehicle

The nominal bending stress capacity of the member (F_{bn}), varies for tension and compression flanges and shall be computed as follows:

F_{bn}	=	F_y for tension flange
	=	$F_y R_b$ for compression flange in positive moment section
	=	$F_{cr} R_b$ for compression flange in negative moment section

In the above equations, F_y is the yield stress of steel and F_{cr} and R_b shall be calculated based on Section 10.48 of the AASHTO Standard Specifications.

In addition to the above rating equations, which are based on strength criteria, for steel beams and girders, the flexural load rating has to be calculated for overload per 10.57 of the AASHTO Standard Specifications to satisfy the serviceability criteria. For composite sections, the rating factor based on serviceability criteria can be calculated using the following equations:

$$IRF = \frac{0.95F_y - (f_b)_{DL1} - (f_b)_{DL2}}{1.67(f_b)_{LL+I}}$$

$$ORF = \frac{5}{3} IRF$$

The controlling rating is the minimum value based on either strength or serviceability.

3.15.1.1.2 Shear Strength Rating

The shear rating factors are calculated using the following equations:

$$IRF = \frac{V_n - 1.3(V)_{DL1} - 1.3(V)_{DL2}}{2.17(V)_{LL+I}}$$

$$ORF = \frac{5}{3} IRF$$

Where:

IRF	=	inventory rating factor based on shear
ORF	=	operating rating factor based on shear
V_n	=	nominal shear capacity of the member
$(V)_{DL1}$	=	shear force in the member due to non-composite dead load
$(V)_{DL2}$	=	shear force in the member due to superimposed dead load
$(V)_{LL+I}$	=	shear force in the member due to rating vehicle

The nominal shear capacity of the member (V_n) shall be calculated based on the shear capacity provisions of the AASHTO Standard Specifications.

3.15.1.2 Tangent Structures – Prestressed Concrete Beams

The rating of prestressed concrete members shall be computed using the rating equations in Section 6.6.3.3 of the Manual for Condition Evaluation. These equations are as follows:

Inventory rating:

- Concrete tension

$$IRF = \frac{6\sqrt{f_c^{'}} - (F_d + F_p + F_s)}{F_l}$$

- Concrete compression

$$IRF = \frac{0.6f_c^{'} - (F_d + F_p + F_s)}{F_l}$$

$$IRF = \frac{0.4f_c^{'} - 0.5(F_d + F_p + F_s)}{F_l}$$

- Prestressing steel tension

$$IRF = \frac{0.8f_y^{*} - (F_d + F_p + F_s)}{F_l}$$

- Flexural strength

$$IRF = \frac{\phi M_n - [1.3(M)_{DL1} + 1.3(M)_{DL2} + M_s]}{2.17(M)_{LL+I}}$$

- Shear strength

$$IRF = \frac{\phi V_n - [1.3(V)_{DL1} + 1.3(V)_{DL2} + V_s]}{2.17(V)_{LL+I}}$$

Operating rating:

- Flexural strength

$$ORF = \frac{\phi M_n - [1.3(M)_{DL1} + 1.3(M)_{DL2} + M_s]}{1.3(M)_{LL+I}}$$

- Shear strength

$$ORF = \frac{\phi V_n - [1.3(V)_{DL1} + 1.3(V)_{DL2} + V_s]}{1.3(V)_{LL+I}}$$

- Prestressing steel tension

$$ORF = \frac{0.9f_y^{*} - (F_d + F_p + F_s)}{F_l}$$

Where:

IRF	=	inventory rating factor
ORF	=	operating rating factor
$f_c^{'}$	=	concrete compressive strength
f_y^{*}	=	prestressing steel yield stress

$6\sqrt{f_c'}$	=	allowable concrete tensile stress. A factor of $3\sqrt{f_c'}$ may be applicable, or this allowable may be zero, as provided by Article 9.15 of the AASHTO Standard Specifications.
F_d	=	unfactored dead load stress
F_p	=	unfactored stress due to prestress force after all loses.
F_s	=	unfactored stress due to secondary prestress forces
F_l	=	unfactored live load stress including impact
ϕM_n	=	design flexural strength of the member
M_s	=	unfactored prestress secondary moment
$(M)_{DL1}$	=	unfactored moment in the member due to non-composite dead load
$(M)_{DL2}$	=	unfactored moment in the member due to superimposed dead load
$(M)_{LL+I}$	=	unfactored moment in the member due to rating vehicle including impact
ϕV_n	=	design shear strength of the member
V_s	=	unfactored prestress secondary shear
$(V)_{DL1}$	=	unfactored shear force in the member due to non-composite dead load
$(V)_{DL2}$	=	unfactored shear force in the member due to superimposed dead load
$(V)_{LL+I}$	=	unfactored shear force in the member due to rating vehicle including impact

3.15.1.3 Curved Structures – Steel Beams and Girders

3.15.1.3.1 Moment Ratings

When calculating ratings for curved beams and girders, the effects of lateral flange bending shall be evaluated in accordance with the Curved Girder Specifications.

When analyzing the structure by refined methods (i.e., grid or finite element analyses) lateral flange bending moments should be determined by the analysis and used in computations for ratings. When a line girder analysis is used in design, lateral flange bending moments are not generally computed. Therefore, when a line girder analysis is used, the following procedure can be used to approximate lateral flange bending moments:

Lateral flange bending moment (M_{lat}) is given by:

$$M_{lat} = \frac{M\left(d^2\right)}{12(R)(H)}$$

Where:

M	=	primary bending moment
d	=	diaphragm spacing
R	=	radius of the girder
H	=	depth of the girder (center to center of flanges)

The lateral flange bending moment will be calculated for the live load (including impact), non-composite and composite dead load moments.

Generally, the effects of lateral flange bending in the top flange of the composite girder may be ignored for composite loading (LL+I, composite dead load). However, the lateral flange bending moment due to non-composite loading shall be included in the rating computations.

The lateral flange bending stress in the flange is given by:

$$f_w = \frac{M_{lat}}{S_{y\,flg}}$$

Where:

f_w	=	lateral flange bending stress
M_{lat}	=	lateral flange moment
$S_{y\,flg}$	=	section modulus of flange = $\frac{(b_f^2 t_f)}{6}$

Inventory rating factor based on moment is the lesser of the value obtained by using the following two equations:

$$IRF_1 = \frac{F_{bn} - 1.3(f_b)_{DL1} - 1.3(f_b)_{DL2}}{2.17(f_b)_{LL+I}}$$

$$IRF_2 = \frac{F_y - 1.3(f_b + f_w)_{DL1} - 1.3(f_b + f_w)_{DL2}}{2.17(f_b + f_w)_{LL+I}}$$

$$ORF = \frac{5}{3}\left(\text{Lesser of } IRF_1 \text{ and } IRF_2\right)$$

3.15.1.3.2 Shear Ratings

Shear ratings for curved girders shall be calculated similar to the equations given for tangent girders.

3.15.1.4 Sample Calculations

3.15.1.4.1 Flexure Rating – Tangent Steel Girder

The following example is based on the rating of a four span (118 FT – 168 FT – 168 FT – 118 FT) continuous composite steel plate girder bridge (Rating Example No. 1 is available from the WVDOH). The rating vehicle is HS20 and the rating calculations are shown for both positive flexure at the center of Span 2 and negative flexure over Pier 2.

Positive flexure rating at center of Span 2

- Applied moment and section properties at positive flexure section:

Mu	=	7,922 K-FT (AASHTO Standard Specification eq. 10-129c)
LLDF	=	0.725 (AASHTO LRFD live load distribution factor)
F_y	=	50 KSI
M_{DL1}	=	1,731 K-FT
M_{DL2}	=	473 K-FT
M^*_{LL+I}	=	2,038 K-FT (live load moment based on one lane)
S_b stl	=	1,332 IN^3
S_b 3n	=	1,729 IN^3
S_b n	=	1,904 IN^3

- Convert live load moment:

$$M_{LL+I} = LLDF\ (M^*_{LL+I})$$

$$M_{LL+I} = 0.725\ (2{,}038) = 1{,}478 \text{ K-FT}$$

- Calculate inventory rating factor based on strength:

$$IRF = \frac{M_u - 1.3(M)_{DL1} - 1.3(M)_{DL2}}{2.17(M)_{LL+I}}$$

$$IRF = \frac{7{,}922 - 1.3\ (1{,}731) - 1.3\ (473)}{2.17\ (1{,}478)} = 1.58$$

- Calculate inventory rating factor based on serviceability:

$$IRF = \frac{0.95F_y - (f_b)_{DL1} - (f_b)_{DL2}}{1.67(f_b)_{LL+I}}$$

$$(f_b) = \frac{M}{S_b}$$

$$(f_b)_{DL1} = \frac{1{,}731\ (12)}{1{,}332} = 15.6 \text{ KSI}$$

$$(f_b)_{DL2} = \frac{473\ (12)}{1{,}729} = 3.3 \text{ KSI}$$

$$(f_b)_{LL+I} = \frac{1{,}478\ (12)}{1{,}904} = 9.3 \text{ KSI}$$

$$\text{IRF} = \frac{0.95(50) - (15.6)\ - (3.3)}{1.67(9.3)} = 1.84 \text{ (does not control)}$$

- Calculate operating rating factor:

$$\text{ORF} = \frac{5}{3}\text{ (IRF)}$$

$$\text{ORF} = \frac{5}{3}(1.58) = 2.63$$

- Calculate rating: (HS20 truck weighs 36 Tons)

IR = 1.58 (36) = 56.9 Tons

OR = 2.98 (36) = 107.3 Tons

Negative flexure rating over Pier 2

- Applied moment and section properties at negative flexure section:

F_y	=	70 KSI
M_{DL1}	=	4,796 K-FT
M_{DL2}	=	1,196 K-FT
M^*_{LL+I}	=	3,095 K-FT (live load moment based on one lane)
S_b stl	=	2,549 IN^3
S_b neg	=	2,686 IN^3
F_{cr}	=	70 KSI (AASHTO Standard Specification section 10.48.2)
R_b	=	1.0 (AASHTO Standard Specification eq. 10-103b)
LLDF	=	0.762 (AASHTO LRFD live load distribution factor)

- Convert live load moment:

  M_{LL+I} = LLDF (M^*_{LL+I})

  M_{LL+I} = 0.762 (3,095) = 2,358 K-FT

- Calculate nominal bending stress

  $F_{bn} = R_b\ (F_{cr})$

  F_{bn} = 1.0 (70 KSI) = 70 KSI

- Calculate bending stress in bottom flange:

$$(f_b) = \frac{M}{S_b}$$

$$(f_b)_{DL1} = \frac{4{,}796\,(12)}{2{,}549} = 22.6\,\text{KSI}$$

$$(f_b)_{DL2} = \frac{1{,}196\,(12)}{2{,}686} = 5.3\,\text{KSI}$$

$$(f_b)_{LL+I} = \frac{2{,}358(12)}{2{,}686} = 10.5\,\text{KSI}$$

- Calculate inventory rating factor based on strength:

$$\text{IRF} = \frac{F_{bn} - 1.3\,(f_b)_{DL1} - 1.3\,(f_b)_{DL2}}{2.17\,(f_b)_{LL+I}}$$

$$\text{IRF} = \frac{70 - 1.3\ (22.6)\ - 1.3\ (5.3)}{2.17\ (10.5)} = 1.48$$

- Calculate inventory rating factor based on serviceability:

$$\text{IRF} = \frac{0.95\,F_y - (f_b)_{DL1} - (f_b)_{DL2}}{1.67(f_b)_{LL+I}}$$

$$\text{IRF} = \frac{0.95\,(70) - (22.6)\ - (5.3)}{1.67(10.5)} = 2.20 \text{ (does not control)}$$

- Calculate operating rating factor:

$$ORF = \frac{5}{3}(IRF)$$

$$ORF = \frac{5}{3}(1.48) = 2.47$$

- Calculate rating: (HS20 truck weighs 36 Tons)

IR = 1.48 (36) = 53.3 Tons

OR = 2.47 (36) = 88.9 Tons

3.15.1.4.2 Moment Rating – Curved Steel Girder

The following example is based on the rating of a five span continuous composite steel plate girder bridge (Rating Example No. 2 is available from the WVDOH). The rating vehicle is HS25 and the rating calculation is shown for flexure at the maximum positive moment location of Span 5.

- Applied moment, section properties and design data:

M_{DL1}	=	4,261 K-FT
M_{DL2}	=	1,161 K-FT
M^*_{LL+I}	=	3,984 K-FT (live load moment based on one lane)
CF	=	1.38 (conversion factor based on grid analysis)
S_b stl	=	3,522 IN^3
S_b 3n	=	4,052 IN^3
S_b n	=	4,414 IN^3
F_{bn}	=	70 KSI (actual member capacity)
F_y	=	70 KSI
d	=	13.156 FT
R	=	272.75 FT
H	=	6.38 FT
$S_{y\ flg}$	=	168 IN^3 (24 IN x 1 ¾ IN)

- Convert live load moment:

$$M_{LL+I} = CF\ (M^*_{LL+I})$$

$$M_{LL+I} = 1.38\ (3{,}984) = 5{,}498\ \text{K-FT}$$

- Calculate lateral bending moments:

$$M_{lat} = \frac{M(d^2)}{12\ (R)\ (H)}$$

$$(M_{lat})_{DL1} = \frac{4{,}261(13.156)^2}{12\ (272.75)\ (6.38)} = 35.3\ K-FT$$

$$(M_{lat})_{DL2} = \frac{1{,}161\ (13.156)^2}{12\ (272.75)\ (6.38)} = 9.6\ K-FT$$

$$(M_{lat})_{LL+I} = \frac{5{,}498(13.156)^2}{12\ (272.75)\ (6.38)} = 45.6\ K-FT$$

- Calculate primary bending stress in bottom flange:

$$(f_b) = \frac{M}{S_b}$$

$$(f_b)_{DL1} = \frac{4{,}261(12)}{3{,}522} = 14.5\ KSI$$

$$(f_b)_{DL2} = \frac{1{,}161(12)}{4{,}052} = 3.4\ KSI$$

$$(f_b)_{LL+I} = \frac{5{,}498(12)}{4{,}414} = 14.9\ KSI$$

- Calculate lateral bending stress in bottom flange:

$$(f_w) = \frac{M_{lat}}{S_{y\,flg}}$$

$$(f_w)_{DL1} = \frac{35.3(12)}{168} = 2.5\ KSI$$

$$(f_w)_{DL2} = \frac{9.6(12)}{168} = 0.7\ KSI$$

$$(f_w)_{LL} = \frac{45.6(12)}{168} = 3.3 \text{ KSI}$$

- Calculate inventory rating factor based on strength:

  The controlling rating factor will be given by the lesser of IRF_1 or IRF_2.

$$IRF_1 = \frac{F_{bn} - 1.3(f_b)_{DL1} - 1.3(f_b)_{DL2}}{2.17(f_b)_{LL+I}}$$

$$IRF_2 = \frac{F_y - 1.3(f_b + f_w)_{DL1} - 1.3(f_b + f_w)_{DL2}}{2.17(f_b + f_w)_{LL+I}}$$

$$IRF_1 = \frac{70 - 1.3\ (14.5) - 1.3\ (3.4)}{2.17\ (14.9)} = 1.45 \text{ (does not control)}$$

$$IRF_2 = \frac{70 - 1.3(14.5 + 2.5) - 1.3(3.4 + 0.7)}{2.17(14.9 + 3.3)} = 1.08$$

$$IRF = 1.08$$

- Calculate operating rating factor:

$$ORF = \frac{5}{3}(IRF)$$

$$ORF = \frac{5}{3}(1.08) = 1.80$$

- Calculate rating: (HS25 truck weights 45 Tons)

  IR = 1.08 (45) = 48.6 Tons

  OR = 1.80 (36) = 81 Tons

3.15.1.4.3 Shear Rating – Steel Girder

For the rating example in Section 3.15.1.4.1, the rating calculations are shown for shear over Pier 2.

- Applied shear and design data for section:

V_{DL1} = 152 K
V_{DL2} = 38 K
V^*_{LL+I} = 102 K (live load shear based on one lane)
V_n = 562 K
LLDF = 1.045 (AASHTO LRFD live load distribution factor)

- Convert live load shear:

$$V_{LL+I} = LLDF\ (V^*_{LL+I})$$

$$V_{LL+I} = 1.045\ (102\ K) = 107\ K$$

- Calculate inventory rating factor

$$IRF = \frac{V_n - 1.3(V)_{DL1} - 1.3(V)_{DL2}}{2.17(V)_{LL+I}}$$

$$IRF = \frac{562 - 1.3\ (152) - 1.3\ (38)}{2.17(107)} = 1.36$$

- Calculate operating rating factor:

$$ORF = \frac{5}{3}\ (IRF)$$

$$ORF = \frac{5}{3}\ (1.36) = 2.27$$

- Calculate rating: (HS20 truck weights 36 Tons)

IR = 1.36 (36) = 48.8 Tons

OR = 2.27 (36) = 81.4 Tons

3.15.1.4.4 Prestressed Concrete Beam

The following example is based on the rating of a three span (118 FT – 118 FT – 118 FT) continuous prestressed concrete beam bridge (Rating Example No. 3 is available from the WVDOH). Sample rating calculations for an interior beam with an HS20 rating vehicle are shown below.

Positive moment and concrete stresses rating at the center of Span 1

- Applied moment, section properties and design data:

M_{DL1} = 3,348 K-FT
M_{DL2} = 372 K-FT
M^*_{LL+I} = 1,741 K-FT (live load moment based on one lane)
P = 1,208 K (effective prestress after losses)
$S_{t\ flange\ N.C.}$ = 14,300 IN^3
$S_{b\ flange\ N.C.}$ = 15,586 IN^3
$S_{t\ flange\ Comp.}$ = 53,263 IN^3
$S_{b\ flange\ Comp.}$ = 21,884 IN^3
A_{beam} = 908 IN^2
Ecc. = 25.89 IN
f'_c = 7,000 PSI
LLDF = 0.704 (AASHTO LRFD live load distribution factor)
ϕM_n = 11,134 K-FT

- Convert live load moment:

$$M_{LL+I} = LLDF\ (M^*_{LL+I})$$

$$M_{LL+I} = 0.704\ (1{,}741) = 1{,}226\ \text{K–FT}$$

Concrete stresses at the center of Span 1

- Concrete tension (bottom of precast beam)

$$F_d = \frac{M_{DL1}}{S_{b\ flange\ N.C.}} + \frac{M_{DL2}}{S_{b\ flange\ Comp.}}$$

$$F_d = \frac{3{,}348\ (12)}{15{,}586}(-1) + \frac{372\ (12)}{21{,}884}(-1) = -2.78\ \text{KSI}$$

$$F_p = P\left[\frac{1}{A_{beam}} + \frac{Ecc.}{S_{b\ flange\ N.C.}}\right]$$

$$F_p = 1{,}208\left[\frac{1}{908} + \frac{25.89}{15{,}586}\right] = 3.34 \text{ KSI}$$

$$F_{LL+I} = \frac{M_{LL+I}}{S_{b\ \text{flange Comp.}}}$$

$$F_{LL+I} = \frac{1{,}226\ (12)}{21{,}884}\ (-1) = -0.67 \text{ KSI}$$

$$IRF = \frac{-6\sqrt{f_c^{'}} - (F_d + F_p + F_s)}{F_l}$$

$$IRF = \frac{-6\sqrt{7{,}000}\ (\frac{1}{1{,}000}) - (-2.78 + 3.34 + 0)}{-0.67} = 1.57$$

- Concrete compression (top of precast beam)

$$F_d = \frac{M_{DL1}}{S_{t\ \text{flange N.C.}}} + \frac{M_{DL2}}{S_{t\ \text{flange Comp.}}}$$

$$F_d = \frac{3{,}348\ (12)}{14{,}300} + \frac{372\ (12)}{53{,}263} = 2.89 \text{ KSI}$$

$$F_p = P\left[\frac{1}{A_{\ \text{beam}}} + \frac{Ecc.}{S_{t\ \text{flange N.C.}}}\right]$$

$$F_p = 1{,}208\left[\frac{1}{908} - \frac{25.89}{14{,}300}\right] = -0.86 \text{ KSI}$$

$$F_{LL+I} = \frac{M_{LL+I}}{S_{t\ \text{flange Comp.}}}$$

$$F_{LL+I} = \frac{1{,}226\ (12)}{53{,}263} = 0.28 \text{ KSI}$$

Case 1

$$IRF = \frac{0.6f_c^{'} - (F_d + F_p + F_s)}{F_l}$$

$$IRF = \frac{4.2 - (2.89 + -0.86 + 0)}{0.28} = 7.83$$

Case 2

$$IRF = \frac{0.4f_c^{'} - 0.5(F_d + F_p + F_s)}{F_l}$$

$$IRF = \frac{2.8 - 0.5(2.89 + -0.86 + 0)}{0.28} = 6.45$$

Positive flexure at the center of Span 1

$$IRF = \frac{\phi M_n - [1.3(M)_{DL1} + 1.3(M)_{DL2} + M_s]}{2.17(M)_{LL+I}}$$

$$IRF = \frac{11{,}134 - [1.3\ (3{,}348)\ \ + 1.3\ (372) + 0]}{2.17\ (1{,}226)} = 2.37$$

$$ORF = \frac{\phi M_n - [1.3(M)_{DL1} + 1.3(M)_{DL2} + M_s]}{1.3(M)_{LL+I}}$$

$$ORF = \frac{11{,}134 - [1.3\ (3{,}348)\ \ + 1.3\ (372) + 0]}{1.3\ (1{,}226)} = 3.95$$

Negative moment rating at Pier 1

- Applied moment, section properties and design data:

M_{DL1}	=	0 K-FT
M_{DL2}	=	-473 K-FT
M^*_{LL+I}	=	-1,722 K-FT (live load moment based on one lane)
ϕM_n	=	-5,286 K-FT
LLDF	=	0.704 (AASHTO LRFD live load distribution factor)

- Convert live load moment:

$$M_{LL+I} = LLDF\ (M^*_{LL+I})$$

$$M_{LL+I} = 0.704\ (-1{,}722) = -1{,}213\ K\text{–}FT$$

Negative flexure over Pier 1

$$\text{IRF} = \frac{\phi M_n - [1.3(M)_{DL1} + 1.3(M)_{DL2} + M_s]}{2.17(M)_{LL+I}}$$

$$\text{IRF} = \frac{-5{,}286 - [1.3\ (0)\ \ + 1.3\ (-473) + 0]}{2.17\ (-1{,}213)} = 1.77$$

$$\text{ORF} = \frac{\phi M_n - [1.3(M)_{DL1} + 1.3(M)_{DL2} + M_s]}{1.3(M)_{LL+I}}$$

$$\text{ORF} = \frac{-5{,}286 - [1.3\ (0)\ \ + 1.3\ (-473) + 0]}{1.3\ (-1{,}213)} = 2.96$$

Shear rating at critical section of Span 1 (at H/2 from Pier 1)

- Applied shear and design data:

V_{DL1}	=	108 K
V_{DL2}	=	24 K
V^*_{LL+I}	=	84 K (live load shear based on one lane)
ϕV_n	=	458 K
LLDF	=	0.849 (AASHTO LRFD live load distribution factor)

- Convert live load shear:

$$V_{LL+I} = \text{LLDF}\ (V^*_{LL+I})$$

$$V_{LL+I} = 0.849\ (84) = 71\ \text{K}$$

Shear capacity at the critical section of Span 1

$$\text{IRF} = \frac{\phi V_n - [1.3(V)_{DL1} + 1.3(V)_{DL2} + V_s]}{2.17(V)_{LL+I}}$$

$$\text{IRF} = \frac{458 - [1.3\ (108) + 1.3\ (24) + 0]}{2.17\ (71)} = 1.86$$

$$\text{ORF} = \frac{\phi V_n - [1.3(V)_{DL1} + 1.3(V)_{DL2} + V_s]}{1.3(V)_{LL+I}}$$

$$ORF = \frac{458 - [1.3\,(108) + 1.3\,(24) + 0]}{1.3\,(71)} = 3.10$$

3.15.2 Conversion Factors for Refined Analyses

When structures are designed using refined analyses, conversion factors shall be developed. The refined analyses methods include line girder analyses based on refined live load distribution factors, grid analyses and finite element analyses. The conversion factors indicate the relationship of live load design moments and shears, obtained from the refined analysis, to the live load moments and shears obtained from a standard line girder analysis with a live load distribution factor of 1.0 for a single lane (a single lane equals two wheels). Do not use AASHTO distribution factors for the line girder analysis.

- The conversion factors for refined analyses shall be computed using the following equation:

$$CF = \frac{\text{Moment (refined analysis)}}{\text{Moment (line girder analysis)}}$$

- Use of conversion factors

Subsequent analyses of the structure may be completed using a standard line girder analysis with a live load distribution factor 1.0 for a single lane (a single lane equals two wheels). Do not use AASHTO distribution factors for the line girder analysis. For additional loadings, or re-evaluation of the design vehicle, the live load moments and shears obtained from the standard line girder analysis shall be multiplied by the conversion factors obtained from refined analysis at appropriate girder location under investigation. For example, for Girder 3 at mid span of span 2, the equivalent refined moment can be calculated as follows:

Girder 3, Location: Span 1.5

CF	=	1.026	(listed in the table on the original plans)
$M_{(LG)}$	=	3175.8 K-FT	(live load moment from line girder analysis)
$M_{(refined)}$	=	3175.8 K-FT (1.026)	
	=	3258.4 K-FT	(equivalent refined live load moment)

3.16 GUARDRAIL

In all cases, it is necessary to provide approach guardrail to effectively protect the motorist from the spearing effect at the end of the guardrail/barriers (see DD-662 for approach guardrail requirements). Whenever possible, the approach guardrail should extend 25 FT, be flared and as strong as the bridge guardrail. The flares should be 4 FT wherever possible.

3.17 BRIDGE IDENTIFICATION PLATE

Section 104.8 of the Standard Specifications requires that a bridge plate be placed on each bridge. Although the specification provides some general requirements for location of the bridge plate, the specific location of the plate must be designated on the construction plans or in the contract documents.

The following will be addressed in the development of each bridge project:

- A bridge plate will be required unless the construction drawings or contract documents specifically indicate that a bridge plate is not required.
  - If a bridge plate is not required, the construction drawings or contract documents will indicate that the plate is not required. Some repair and renovation projects may not require a bridge plate.
- The specific location for the bridge plate shall be specified on the construction plans or in the contract documents:
  - On steel through truss bridges, the bridge plate shall be placed on the end post approximately eight feet above the deck surface.
  - On deck type structures or other bridges with concrete barriers, the bridge plate will be placed on the roadway face of the barrier.
  - On bridges with steel guardrail and no suitable location on the superstructure, the plate will be mounted on the front face of the wingwall.
  - On other unusual bridges, the Designer will specify the most suitable location where the bridge plate can be observed and read from the roadway or sidewalk surface.
- The bridge plate will always be mounted at the beginning station end of the structure and on the right hand side of the structure, when approached facing ahead station.

3.18 CONDUIT ATTACHMENT TO BRIDGES

Numerous situations have been observed where clamps have been used to attach conduit or supports to the structural steel of bridges. The clamps cut into the structural steel and damage the paint coating. This causes accelerated deterioration of the structural steel due to the damage to the coating, as well as providing a location for dirt, moisture and chlorides to collect.

Any device that damages paint, provides areas that trap moisture, dirt, chlorides and debris or prevents adequate clearance to clean and paint should not be approved to use to attach the conduit. A preferred option is a galvanized structural steel bracket, bolted to the structural steel, or a bracket welded to the steel during fabrication. These brackets shall not create a fatigue-prone detail. Other attachment options may be considered as long as they meet the requirements listed above.

3.19 FUTURE INSPECTIONS

Bridges shall be detailed and constructed to allow for proper inspection. Methods for inspection access shall be described in the TS&L Report. The Designer may need to consider manholes, etc. to facilitate access. The anticipated means of access from a walkway to all hand-holds shall be documented. Consideration of the following features should be made:

- Plate girders over 54 IN deep shall have rail hand-holds in their inside web faces. Webs deeper than 7 FT shall have two parallel rails.
- A walkway in conjunction with hand-holds shall be provided when BOTH of the following conditions exist:
  - Underdeck depth exceeds 6 FT.
  - Bridge length exceeds 1500 FT.
- Access to hollow piers and large box girders shall be provided. Electrical conduit and outlets may be required inside hollow members. The use of these items shall be with approval of the Bridge Project Manager.

Inspection walk access ladders and other bridge access ladders shall be designed and detailed in a manner that precludes easy access by unofficial persons. The bottom rung of ladders provided for initial access shall be placed a minimum of 8 FT above ground such that another ladder is necessary or the ladder shall have a locked gate. Ladders providing access downward over the edge of bridge decks shall have locked gates. Other details shall be used, as necessary, to discourage access.

3.20 BRIDGE DEMOLITION/DISMANTLING PLAN

All bridge projects requiring the demolition/dismantling of structures shall be in accordance with Section 203 of the Standard Specifications.

See Appendix A for a note to be included in the plans for the rehabilitation, replacement or demolition of existing highway bridges which contain lead based coatings. See Appendix D, Coatings, for additional information regarding lead based coatings.

Designers and/or Project Managers are responsible for determining the presence or absence of lead based coatings by requesting a field survey be conducted by the Division of Highways' Materials Control, Soils and Testing Division.

3.21 TEMPORARY STRUCTURES

All temporary structures shall be designed in accordance with the Governing Specifications, and shall be so noted on the plans.

3.22 SALVAGEABLE MATERIALS

Bridge projects may involve salvaging certain materials from an existing bridge, temporary bridge or other facility. A plan note is required in the contract documents to clearly inform the Contractor of their responsibility for the dismantling, care, delivery, delivery location, etc. of the salvaged material. In addition to specifying the Contractor to deliver the material to a specified site, it is vitally important that the notes specify the Contractor to unload and store the material at the designated site. In addition, any particular instructions for unloading and/or storage must be specified.

If specific instructions requiring the Contractor to unload the materials are not contained in the contract documents, it will be assumed and interpreted by the Contractor and the Construction Administrators that the Department is to unload the material. This can cause extensive disruption of schedules for the maintenance forces that will be required to unload the materials.

SECTION 4 - GENERAL PLAN PRESENTATION

4.1 COMPUTER-AIDED DESIGN AND DRAFTING

4.1.1 Electronic Data Exchange Compatibility

The purpose of this section is to provide consistent procedures and a basis for the exchange of CADD files and data between Engineering Division and outside organizations. Please note that this information is updated periodically. Organizations exchanging CADD data with the WVDOH are responsible for ensuring that current versions of all standards are being used.

4.1.1.1 Contract Plans

All bridge CADD files submitted to the WVDOH are to follow the naming and level conventions defined and contained herein. This information is to supplement the conventions specified in the WVDOH CADD Standards.

All information shown on the hard copy drawings shall be reflected in the CADD files. Sealed hard copy drawings shall govern over the electronic files, however, making changes to just the hard copy will not be permitted.

4.1.1.1.1 Graphic File Format

All CADD data files provided by and to the WVDOH will be in the latest version of MicroStation. This requirement ensures that files received by the WVDOH are directly usable on its CADD systems without additional work. The responsibility for providing complete, correct CADD data files to the WVDOH rests solely with the submitting organization.

4.1.1.1.2 Identification and File Nomenclature

All media provided to the WVDOH shall be labeled with the pertinent information listed below:

- Project Name
- State Project Number
- Federal Project Number
- Creation Date
- Contents

- Firm
- Project Manager

Non-conforming media will not be accepted, see Section 4.1.1.1.3.

In addition, a written directory listing of all media and a description of the files should accompany all submissions. Any questions on proper identification should be directed to the Project Manager.

All electronic drawing files for bridge plans and details shall be submitted in the MicroStation *.dgn* format, no exceptions. Some examples of acceptable drawing file nomenclature are:

- layout.dgn
- index.dgn
- generalnotes.dgn

The above format should be applied to Section 4.4.1, Drawing Sequence, when naming the files for an electronic bridge plan submission.

4.1.1.1.3 Media Data Formats

The WVDOH currently distributes CADD files on DOS formatted 3.5 IN diskettes or compact discs. The file format shall be DOS or a zipped format, depending on the file size. Any problems/concerns should be directed to the Engineering Computer Services Division for additional information and guidance.

4.1.1.1.4 Electronic Data Submittal Checklist

Electronic data submittals are for archiving purposes only. The set of plans containing the seal and signature of the Engineer shall be the record set of contract documents.

No drawing files electronically submitted to the WVDOH should contain names or title blocks. Electronic seals should not be submitted or attached to the drawing files.

All electronic data submittals shall be submitted to the Project Manager. The Project Manager shall have the sole responsibility for the acceptance of the submitted material. Electronic data submittal requirements can be found at the following website: http://www.wvdot.com/9_consultants/9a2_checklist.htm.

4.1.2 Standard Drawings

4.1.2.1 Standard Details and Drawing Files

A number of standard details and drawings are located on the WVDOH server. These are updated as necessary and are available upon request. For a listing of the standard bridge details, refer to the following website:
http://www.wvdot.com/engineering/StandardDetails/Vol3/toc_sd3.htm.

All other details and drawings not listed on the website can be obtained from the WVDOH.

4.1.2.1.1 Standard Prestressed Concrete Box Beam Files

Prestressed concrete box beams and AASHTO plan sheets formatted as used by the WVDOH are available electronically at the following website:
http://www.wvdot.com/engineering/StandardDetails/Vol3/toc_sd3.htm.

4.1.2.1.2 Cell and Resource Files

Standard MicroStation cell and resource files can be obtained at the following website: http://www.wvdot.com/9_consultants/9b1_microstation.htm.

Resource files used to generate the needed fonts and line styles include:

- Font.rsc – MicroStation font library as used by the WVDOH
- Roadway.rsc – MicroStation custom line style library as used by the WVDOH

4.1.2.2 Dimensions

All dimensions and MicroStation working units are to be in Customary U. S. Units. Plan detailing and precision are to be as shown in Table 4.1.2.2.

4.1.2.3 Physical Size of Drawings, Scales

The following guidelines are intended to establish a standard format for plan sheets. These standards shall be followed whenever possible. In rare instances, it may be necessary to deviate slightly from recommended formats. These exceptions should be held to a minimum and used only when sound judgment indicates that a deviation is necessary.

DETAIL	UNIT	PRECISION
Stationing	Hundred feet (e.g., 150.25 FT = 1+50.25)	Two decimal places (.01)
Length	FT-IN	Two decimal places (⅛ IN)
Finished Ground Elevation	FT	Two decimal places (.01)
Finished Concrete*	FT	Two decimal places (.01)
Beam Seat Elevation	FT	Three decimal places (.001)
Slope/Cross-Slope	%	Two decimal places (.01)
Skew Angle	DEG (°), MIN (′), SEC (″)	Two decimal places (.01″)
Ultimate Foundation Pressure	TSF	Two significant figures
Temperature	°F	Whole number (1)
Drawing Dimensions	FT-IN	⅛ IN
Clear Cover	IN	½ IN
Structural Steel	FT-IN	1/16 IN
Reinforcing Steel	FT-IN	1 IN straight, ¼ IN bent
Deep Foundation Tip Elevation	FT	1 FT
Pile Batter/Cut-Fill Slope	Ratio (e.g., 1:1)	--
Core Boring Elevation	FT	One decimal place (.1)

* Except Beam Seat

Table 4.1.2.2

4.1.2.4 Sheet Size and Format

All contract plans are published on sheet sizes B and D, where B is 11 x 17 IN and D is 22 x 34 IN. The border for the D size sheet is 21 x 32 IN providing a 0.5 IN border on the top, bottom and right sides with a 1.5 IN left border for binding. The original contract plans are published on a permanent, reproducible medium such as Mylar plastic. Additional paper copies of these plans are provided to Contractors and WVDOH construction personnel. Bid plans and other distributions of the contract plans are issued on sheet size B, or tabloid size. Many in the industry prefer the B size; therefore, it is necessary for all drawings to be clearly legible in this size.

4.1.2.5 Scales

Preferred scales and text sizes for D size sheets and the standard MicroStation border cells are shown in Table 4.1.2.5.

4.1.3 Level Methodology

The latest version of MicroStation used by the WVDOH has changed the way levels are utilized compared to previous versions. MicroStation offers a way to group elements on levels, in a manner similar to the Designer drawing different parts of a design on separate

SCALE	TEXT HEIGHT
1 ½ IN = 1 FT	0.10 FT
1 IN = 1 FT	0.15 FT
¾ IN = 1 FT	0.20 FT
½ IN = 1 FT	0.30 FT
⅜ IN = 1 FT	0.40 FT
¼ IN = 1 FT	0.60 FT
3⁄16 IN = 1 FT	0.80 FT
⅛ IN = 1 FT	1.20 FT
1⁄16 IN = 1 FT	2.35 FT
1 IN = 10 FT	1.50 FT
1 IN = 20 FT	3.00 FT
1 IN = 30 FT	4.50 FT
1 IN = 50 FT	7.50 FT
1 IN = 100 FT	15.00 FT
1 IN = 200 FT	30.00 FT

Table 4.1.2.5

transparent sheets. By stacking the transparent sheets one on top of another, the Designer can see the complete drawing but can only draw on the top sheet.

Different entities should be used on different levels, allowing the Designer to turn on only the part they need to work on and to plot parts of the design separately. Due to different printers and print drivers used, weights are not given in Figure 4.1.3, but the actual plotted line thicknesses are shown. Figure 4.1.3 shows recommended line styles for level separation.

4.2 ESTIMATE OF QUANTITIES

4.2.1 Accuracy of Quantity Estimates

The Designer shall use diligence in determining the actual quantity for each item needed to construct the project.

Established bid items shall be used whenever possible. When a needed unit of work has not been assigned an item number, the Designer has two options: combine work or obtain a new bid item number.

Line Type	Plotted Line	Line Thickness
Object		0.020"
Hidden	0.125" TYP; 0.0625" TYP	0.018"
Construction	0.125" TYP; 1" - 1½" TYP; 0.0625" TYP	0.014"
Centerline	0.125" TYP; 1" - 1½" TYP; 0.0625" TYP	0.014"
Existing	0.0625" TYP; 0.0625" TYP	0.009"
Dimension		0.012"
Rebar		0.028"
Border		0.031"
Major Contours		0.020"
Minor Contours		0.014"

Text			
Type	Dimensions/Notes	Subtitles	Titles
Thickness	0.014"	0.028"	0.039"

Figure 4.1.3

4.2.1.1 Combine Work

A unit of work can be combined with or made incidental to an established bid item. In either case, a plan note must indicate to the Contractor where to include their cost for the combined or incidental work that is required. This should only be done with the permission of the Bridge Project Manager.

4.2.1.2 New Bid Item Number

A list of established pay items has been developed and is maintained by the Engineering Division in the BAM System (Bid Analysis Management System). Designers must use pay items that are on this list. When a needed unit of work to construct the project does not fit into any of the pay items already on the list, then a new bid item may be added.

When the newly determined unit of work is needed on a recurring basis, then a new bid item number shall be obtained from the Technical Section. Plan notes or Special Provisions (see Section 4.3) shall be written to explain to the Contractor the scope of work involved with the new bid item and what the units of payment will be.

4.2.2 Round Off

The Designer shall provide the estimated quantities in whole units. When calculations produce fractional numbers, the value shall be rounded to the next higher whole number.

4.3 STANDARD SPECIFICATIONS AND SPECIAL PROVISIONS

4.3.1 Standard Specifications

All highway and bridge projects must be in accordance with the latest edition of the *West Virginia Division of Highways Standard Specifications, Road and Bridges* (Standard Specifications) and shall be specified on the General Notes sheet in the contract plans.

4.3.2 Supplemental Specifications

The WVDOH periodically publishes Supplemental Specifications; a compilation of all specification revisions which have been approved for use by the WVDOH, industry, and the FHWA, since the last publication. Each Supplemental Specification is noted as accompanying a particular Standard Specification. Supplemental Specifications are cumulative, in that the current Supplemental Specifications also contain the approved specification changes from previous issues of the Supplemental Specifications. When

new Standard Specifications are published, the appropriate specification revisions from the then current Supplemental Specifications are incorporated into the new Standard Specifications. Therefore, a reference to the Standard Specifications must also contain a reference to the appropriate Supplemental Specification.

4.3.3 Special Provisions

Special provisions are governing specifications for a specific item of work on a project for which applicable specifications are not included in the Standard or Supplemental Specifications. Special provisions can also be developed to modify, add to, or delete all or part of the current Standard or Supplemental Specifications. When the Designer determines a portion or all of the work (materials or construction) is not adequately specified by the Standard or Supplemental Specifications, the Designer is responsible for assuring that an appropriate special provision is included in the project PS&E package. If an appropriate special provision does not currently exist, the Designer is responsible for preparation of the special provision. Special provision format and presentation is strictly controlled to assure compatibility with the governing specifications. Designers should consult with the Bridge Project Manager for guidance in preparation of special provisions.

4.3.3.1 Specification Hierarchy

In developing and authoring special provisions and plan notes, attention must be given to the hierarchy of specifications. Section 105.4 of the Standard Specifications establishes the hierarchy as follows:

- Supplemental Specifications will govern over Standard Specifications.
- Plans will govern over Supplemental Specifications and Standard Specifications.
- Special Provisions will govern over Plans, Supplemental Specifications and Standard Specifications.

Designers and Bridge Project Managers are responsible to assure the accuracy of special provisions and plan notes with due regard for specification hierarchy.

4.4 BASIC LAYOUT – BRIDGES

4.4.1 Drawing Sequence

Bridge plans are composed of drawings covering each of the following aspects of a structure. Where applicable, all drawings shall be drawn to an appropriate scale. The order of bridge plan sheets is as follows:

- General Plan and Elevation
- Index of Drawings
- General Notes
- Estimate of Bridge Quantities
- Construction Sequence
- Temporary Construction Access
- Foundation Layout
- Substructure Drawings
- Superstructure Drawings
- Deck Drawings
- Roadway Elevations and Dead Load Deflections
- Miscellaneous Details
- Erection Details
- Approach Slabs
- Situation Plan
- Core Borings
- Existing Bridge Plans
- Load Rating

The above sheets may be combined, when practical, for simple structures and details.

The following is a general format for detailing and may be modified depending on the complexity of the project. See the "Final Detail Bridge Plan Submission Certification" checklist in DD-202 for a complete listing.

4.4.1.1 General Plan and Elevation

The General Plan and Elevation sheet(s) shall contain a drawing of the entire bridge in plan and elevation view. The sheet(s) shall contain, but not be limited to the following applicable information:

- Plan View
  - Plan view of bridge, including outline of all substructure units
  - North arrow
  - Centerline of roadway

- Work points and station of each substructure unit
- Skew angle of bridge
- Bridge layout dimensions (bridge, lane and shoulder widths)
- Span lengths
- Centerline of bearing of each substructure unit
- Route number and name (if applicable)
- Horizontal alignment information, including all complex geometry data
- Highway signage, lighting and utility features

- Elevation View
  - Elevation view of bridge, including all substructure units
  - Beginning and ending stations of bridge along profile grade line
  - Length of bridge: paving notch to paving notch along baseline
  - Length of bridge: centerline of bearing to centerline of bearing along baseline
  - Existing ground line
  - Proposed profile grade line
  - Profile grade data, including vertical curve data
  - Location of fixed and expansion bearings
  - Elevations of top of footings for shallow foundations
  - Bottom of footing elevations for deep foundations and the estimated pile (or caisson) tip elevation
  - Elevation of low bridge seat for each substructure unit
  - Berm elevation and width
  - Slope protection type, thickness and slope
  - Highway signage, lighting and utility features

4.4.1.1.1 Bridges Over Waterways

This sheet(s) shall contain the following additional information:

- Plan View
  - Stream name
  - Edge of stream at normal water elevation
  - Stream flow direction
  - Ordinary high water
- Elevation View
  - Normal water elevation
  - Ordinary high water
  - The appropriate design frequency discharge and elevation
  - Backwater elevation due to larger stream
  - Clearances, horizontal and vertical
  - +2% flowline (if navigable stream)

4.4.1.1.2 Bridges Over Railroads

This sheet(s) shall contain the following additional information:

- Plan View
  - Name of railroad
  - Valuation station of railroad and bridge at the respective centerlines
  - Direction information (e.g., to Charleston)
  - Skew angle of the centerline of railroad track(s) with respect to the centerline of roadway
  - Track horizontal alignment data
  - Crash wall locations
  - Location of critical vertical clearance point with station and offset
  - Actual and required horizontal clearance dimensions
- Elevation View
  - Actual and required vertical and horizontal clearance dimensions

4.4.1.1.3 Bridges Over Roadways

This sheet(s) shall contain the following additional information:

- Plan View
  - Route number and name (if applicable)
  - Skew angle of roadway with respect to bridge centerline
  - Intersection station
  - Horizontal alignment data for both roads
  - Minimum horizontal clearance lines
  - Actual and required horizontal dimensions
- Elevation View
  - Location of critical vertical clearance point with station and offset
  - Minimum horizontal clearance lines
  - Other features of the roadway underneath the proposed bridge (e.g., ditches, guardrail)

4.4.1.2 Index of Drawings

The Index of Drawing sheet(s) shall contain a table of all the drawings in the set of plans. The table shall contain the sheet name and number.

4.4.1.3 General Notes

The Designer shall use the General Notes sheet to address project specific items, revise or add to the Standard Specifications. The General Notes sheet(s) shall contain, but not be limited to, the following applicable information:

- Governing Specifications
- Design Criteria
  - Design specifications
  - Welding codes
  - FWS allowance
  - Special loads (e.g., ship impact)
- Design Data
  - Concrete (for each class used)
  - Prestressed concrete beams
  - Structural steel (for each grade used)
  - Reinforcing steel
  - Prestressing strands
- Material and Construction Notes
  - Concrete
  - Structural steel
  - Reinforcing steel
  - Fasteners
  - Excavation
  - Backfill
  - Joint filler
  - Piling/caissons
  - Bearing and bearing areas
  - Handling and storing steel members
  - Construction joints
  - Blast cleaning and painting
  - Protection of concrete substructure
  - Environmental
  - Scour protection
- Maintenance of Traffic
  - Temporary structure requirements
  - Phased construction
- Dismantling Structure Requirements
  - Disposal of material
  - Limits of removal
  - Bridge demolition/dismantling plan
- Deck Overhang
- Bridge Specific Agreements and Permits
  - Special railroad requirements
  - Special Coast Guard requirements
  - Special environmental requirements

- Erection Notes and Procedures
- Shop Drawings
- Section Cut Symbology
- Highlighted Special Provisions
  - The Designer shall list in this section all known special provisions for the bridge project. This note shall be placed on the General Note sheet - "The following is not a complete list of special provisions. See the proposal for a listing of all special provisions".
- Abbreviations
- Special Notes
  - Place the notes that do not fit any of the above headings in this section.

4.4.1.4 Estimate of Bridge Quantities

The Estimate of Bridge Quantities sheet(s) shall contain, but not be limited to, the following applicable information:

- Pay item numbers and descriptions
- Reinforcing steel bar quantities with breakdown for each substructure and superstructure unit
- Concrete quantities with breakdown for each substructure and superstructure unit
- Type and weight of structural steel including total weight and breakdown by different grade
- Quantities split for items to be divided between governmental jurisdictions

4.4.1.5 Construction Sequence

The Construction Sequence sheet(s) shall contain, but not be limited to, the following applicable information:

- Traffic control plan notes
- Transverse section showing traffic lanes maintained for various phases of construction
- Maintenance of traffic
- Quantities
- Cut-line location and appropriate removal details for deck and parts of substructure.
- Construction phasing and closure pour details
- Temporary support details
- Temporary shoring details

4.4.1.6 Temporary Construction Access

The Temporary Construction Access sheet(s) shall contain, but not be limited to, the following pertinent information:

- Notes
- Quantities
- Detours
- Construction method and sequence
- Plan view of causeways with north arrow
- Section view with details of temporary access
- Hydraulic information (if applicable)
- North arrow

4.4.1.7 Foundation Layout

A Foundation Layout sheet shall be included in the plans for all bridges designed. The foundation layout sheet(s) shall contain, but not be limited to, the following applicable information:

- Centerline of roadway and centerline of substructure bearings
- Skew angle(s) of substructure units (if applicable)
- Work point numbers with stations, northings, eastings and bearing between the work points
- All dimensions necessary for the layout of work points.
- Work point number and stations
- All dimensions necessary for construction of the substructure units
- North arrow

4.4.1.8 Substructure Drawings

4.4.1.8.1 Abutments

The Abutment sheet(s) shall contain, but not be limited to, the following applicable information:

- Plan View
  - Plan view of the abutment with all dimensions necessary for construction of the abutment
  - Centerline of roadway and centerline of bearing
  - Station direction
  - Skew angle of abutment

- Work point number
- Center line of beams or girders with spacing
- Beam or girder seat dimension
- Wingwall lengths and skew
- North arrow
- Weep drain spacing
- Location of construction and expansion joints
- Anchor bolt layout
- Pile size, batter, and spacing
- Drilled caisson size and spacing
- A spread footing abutment requires a footing plan with reinforcing layout and bar marks

- Abutment Elevation View
  - Elevation view of the abutment including piles or drilled caissons if any
  - Beam seat elevations
  - Backwall elevations at centerline of roadway and gutter lines
  - Bottom of footing elevation, if on piles or drilled caissons
  - Depth of drilled caisson rock sockets
  - Top of footing elevation for spread footing with minimum footing thickness
  - Weep drain holes and elevations
  - Construction joints
  - Section arrows
  - Reinforcing steel layout with bar marks
  - All dimensions necessary for construction of the abutment
  - Berm line with elevation
- Wingwalls – Elevation View
  - Reinforcing steel layout with bar marks
  - Dimensions necessary for construction
  - Elevations at the top of the wingwalls are given at the gutter line, at the intersection of the wingwall and backwall, as well as at the end of the wingwall
  - If the wingwall cantilevers from the abutment, show the elevation at the bottom of the wingwall
  - If the wingwall is on a spread footing, show the elevation at the top of footing
  - If the wingwall is on a pile supported footing, show the elevation at the bottom of footing
  - Construction joint/locations and type
  - Existing ground line
- Abutment and Wingwall Sections
  - Reinforcing steel with bar marks
  - Centerline of anchor bolts
  - Dimensions necessary for construction
  - Limits of structure excavation
  - Limits of select material for backfill

- Weep hole or other drainage items
- Pile spacing and size or drilled caissons size
- Embedment of piles or drilled caissons
- Berm line and berm elevation
- Construction joints
- Existing ground line
- Utilities passing through the wall

- Reinforcing Schedule (see Section 4.4.2)
- Barrier End Details
  - Plan view showing all dimensions necessary for construction
  - Elevation view showing reinforcing steel bars with bar marks and any construction joints
  - Guardrail end anchorage details
- Notes
  - Specify the allowable bearing capacity and the maximum design bearing capacity for spread footings, the allowable drilled caisson or pile load capacity and the maximum design load per drilled caisson or pile for deep foundations
  - Any abutment specific notes not covered in the General Notes

4.4.1.8.2 Piers

The Pier sheet(s) shall contain, but not be limited to, the following applicable information:

- Plan View
  - Plan view of the pier with all dimensions necessary for construction of the pier
  - Centerline of roadway and centerline of bearing
  - Station direction
  - Skew angle of pier
  - Work point number
  - Center line of beams or girders with spacing
  - Beam or girder seat and pedestal dimensions
  - North arrow
  - Anchor bolt layout
  - Piling layout for pile supported footings
  - Drilled caisson layout for caisson supported footings
- Elevation View (Looking ahead station)
  - Bridge seat elevations
  - Bottom of footing elevation, if on piles or drilled caissons
  - Depth of drilled caisson rock sockets
  - Top of footing elevation for spread footing with minimum footing thickness
  - Construction joints

  - Section arrows
  - Reinforcing steel bar layout with bar marks in footing(s), column(s) and pier cap
  - Dimensions necessary for construction of the pier
  - Limits of structure excavation and/or wet excavation
  - Limits of select embankment and/or scour protection
  - Existing ground line
- Side Elevation View
  - Reinforcing steel with bar marks in footing and column
  - Dimensions necessary for construction
  - Construction joints
  - Limits of structure excavation and/or wet excavation
  - Limits of select embankment and/or scour protection
  - Existing ground line
- Section Views
  - A section through the column looking down on the pier showing reinforcing steel bar layout with bar marks
  - A section through the pier cap showing reinforcing steel with bar marks
  - Anchor bolt layout
- Reinforcing Schedule (see Section 4.4.2)

4.4.1.9 Superstructure Drawings

4.4.1.9.1 Framing Plan

The Framing Plan shall contain, but not be limited to, the following applicable information:

- Centerline of roadway
- Centerline of bearing at each substructure unit
- Skew angle
- Line drawing of structural framing
- Beam or girder spacing
- Work point number
- Beam or girder identification mark (use letters for beam marks, e.g., Beam A, Girder A, etc.)
- Intermediate diaphragms or cross frames and spacings
- Distance from centerline of bearing to centerline of splices
- Length of each span from centerline of bearing to centerline of bearing (along center line of roadway)
- Total length of structure along center line of roadway
- North arrow
- Use numbers to identify splices (e.g., Splice 1)

- Type of bearing (e.g., fixed, expansion)
- For all structures other than conventional straight multi-beam and multi-girder types, notes shall be added to clarify which members are to be considered "main members" (including cross frames) for purposes of steel toughness (CVN) requirements and for nondestructive testing (NDT) of welds
- Location of all stiffeners other than stiffeners used for cross frame connections
- Partial segment of inspection handrail
- Future jacking points
- Notes
    - Any framing plan notes not covered in the General Notes

4.4.1.9.2 Beam or Girder Elevation

The Beam or Girder Elevation shall contain, but not be limited to, the following applicable information:

- Steel Superstructure
    - Distance from centerline bearing to centerline of splices and dimensions for flange transition points for each beam or girder
    - Total length of each beam or girder
    - Number, spacing and location of studs
    - Size and weight of rolled beams (e.g., W24 x 162)
    - For plate girders, show sizes of the web plate, top and bottom flange plates, along with grade of steel and welds
    - Location and extent of tension zones and stress-reversal areas in girder flanges
    - Intermediate, bearing and auxiliary stiffeners with size
    - Jacking loads in Tons
- Concrete Superstructure
    - For prestressed AASHTO I-beams, use the standard detail sheet for the type specified and include required design and detailing information
    - For prestressed box beams, use the standard detail sheet for the appropriate size of box and include required design and detailing information
    - For post-tensioned beams include the required design and detailing information
    - Jacking loads in tons

4.4.1.9.3 Superstructure Details

The Superstructure Details shall contain, but not be limited to, the following applicable information:

- Field Splice Details
  - Plan view(s) showing flange splice plates and bolt layout and spacing
  - Elevation view showing flange and web splice plate sizes and web bolt spacing
- Cross Frames or Diaphragms
  - Steel cross frames or diaphragms
    - Elevation views of abutment, pier and intermediate cross frames or diaphragms with actual cross-slope(s)
    - Bearing stiffener plate size
    - Member sizes of cross frames or diaphragms
    - Plan view of cross frames or diaphragms as needed
    - Weld and clip details
    - Elevation view of bolt layout and intermediate stiffener plate thickness
  - Concrete diaphragm
    - Elevation views of abutment, pier and intermediate diaphragms with actual cross-slope(s)
    - Reinforcing steel layout with bar marks
    - All dimensions necessary for construction
- Girder Post-tensioning Details
- Bearing Stiffener, Intermediate Stiffener and Auxiliary Stiffener Details
- Shear Connector Details
- Bearings
  - Design and data table including the following applicable information:
    - Location
    - Bearing type – fixed, expansion, guided or non-guided
    - Service loads – DL (minimum and maximum), LL and horizontal seismic loads
    - Design movement (longitudinal and transverse)
    - Design rotation
    - Roadway slope
    - Bearing orientation angle
    - Bearing dimensions (including beveled sole plate, sole plate and masonry plates)
    - Total bearing depth
    - Anchor bolt information (number, diameter and embedment length)
    - Miscellaneous items (e.g., PTFE data, guides, stiffeners etc.)
  - Bearing layout diagram showing the bearing type and orientation for each beam at all substructure locations
  - Plan view of the bearing showing all items necessary for their fabrication, including anchor bolt locations
  - Elevation view labeling all items included in the bearing device along with any welding or bonding
  - Specific details necessary to fabricate uncommon bearing items (e.g., embedded plates with studs for prestressed concrete beams and elastomeric bearing with PTFE sliding surfaces)
  - Steel reinforced elastomeric bearing pads

        - Plan view of bearing pad showing overall dimensions
        - Include sole or masonry plates if necessary
        - Elevation view showing overall height, internal and external layer thickness, steel shim thickness and edge distances
        - Specific details necessary for the fabrication of the bearing pad
    - Any bearing detail notes not covered in the General Notes sheet

4.4.1.10 Deck Drawings

4.4.1.10.1 Deck Layout

The Deck Layout sheet(s) shall contain, but not be limited to, the following applicable information (see Figure 3.2.3):

- Plan view of deck showing reinforcing steel layout and bar marks both transversely and longitudinally, top and bottom
- Additional reinforcing steel in the top of slab over piers, and their placement
- Overall length of deck slab
- Overall barrier length
- Skew angle
- Centerlines of bridge, bearings and piers
- North arrow
- Radius of deck fascia for curved bridges
- Deck placement sequence (see Section 3.2.3)
- Distance from the centerline of bearing to the end of the deck
- Deck slab construction joints must be at the same location as the curb, sidewalk and parapet joints
- Construction joints
- Notes regarding deck concrete, deck slab overhang and deck placement sequence (state allowable options)
- Bar marks, number of bars and bar location (top and/or bottom)
- The minimum lap lengths for the bar sizes being used in tabular form
- Special reinforcement details for sharply skewed bridges
- Deck drain locations
- Location of appurtenances

Sample Deck Reinforcing Plan sheets are available from the WVDOH.

4.4.1.10.2 Typical Deck Section

The Typical Deck Section sheet(s) shall contain, but not be limited to, the following applicable information:

- Overall width of deck slab
- Type of barrier and/or any sidewalk information
- Gutter to gutter dimension between parapets
- Dimension to centerline of deck
- Width of parapets
- Thickness of deck
- Overlay thickness
- Deck overhang dimensions
- Girder spacing
- Profile grade line location
- Location of lanes and shoulders
- Cross-slope of bridge deck
- Reinforcing steel with bar marks
- Reinforcing clearances
- Lap lengths
- Construction joints

For General Typical Deck Section, see Figure 4.4.1.10.2.

4.4.1.10.3 Barrier and/or Sidewalk Details

- Show a section view with all dimensions and construction details
- Note - barrier dimensions vary according to the deck system being used
- Show a section view of barrier and/or sidewalk with reinforcing steel and bar marks

Typical Barrier Section drawings are available from the WVDOH.

4.4.1.10.4 Deck Construction Joints

Place a transverse, vertical construction joint between adjacent deck pours. Extend the longitudinal bars thru the construction joint a minimum of the lap length. Note that the joint is finished with a ¼ IN edging tool (see Figure 3.2.3).

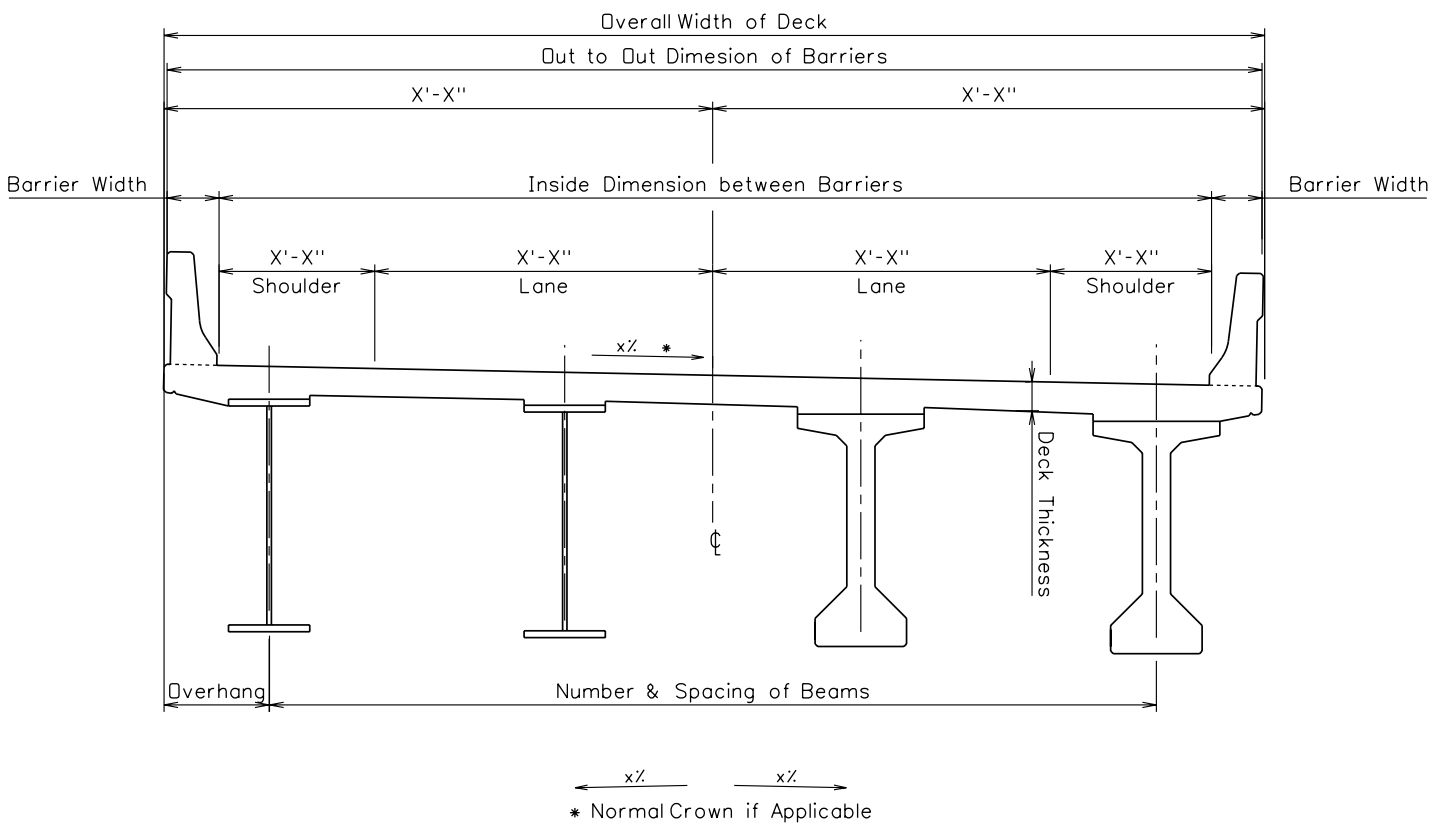

DECK SECTION VIEW

Figure 4.4.1.10.2

4.4.1.11 Roadway Elevations and Dead Load Deflections

This sheet(s) shall contain the roadway elevations at the centerline of each beam or girder, the gutters, fascias and profile grade line. These elevations shall be given at equal spaces per span (typically 10 to 15 FT). The length of the structure also needs to be shown.

Dead load deflections due to the deck placement sequence and appurtenance placement shall be shown. If necessary, on long-span bridges, deflections shall be shown for individual pour sequences.

For steel beam/girder superstructures, a table of various dead load deflections (including deflections due to steel weight), vertical curve corrections and required shop camber shall be given for all beams/girders. A camber diagram shall be provided showing the location of points along the length of the beam, for which camber and deflections are given, along with the required blocking dimensions.

For concrete beam superstructure, a table of dead load deflections shall be given for each beam. A camber diagram including appropriate tables shall be provided showing the estimated initial camber and net final camber.

A section showing the placement of the deck over the beams or girders, and, the control depth from the roadway surface to the top of the beams or girders.

4.4.1.12 Miscellaneous Details

These sheets shall contain any details necessary for the structure that has not been presented on any other sheet in the plans such as:

- Expansion joints
- Inspection railing
- Walkways
- Railings
- Deck drainage
- Overhead signs
- Navigational lighting
- Lighting
- Utility supports
- Pedestrian screening

These details shall contain all information necessary for construction.

4.4.1.13 Erection Details

A proposed girder erection sequence shall be given for large or complicated structures if required by the Bridge Project Manager or the scope of work.

The erection sequence diagrams shall show the profile view of the structure with the following information given for the individual phases of erection where applicable:

- Proposed substructure units, including excavation limits
- Placement of superstructure field sections/units over the piers, including pertinent erection criteria and bracing information including applicable notes
- Sequences for placing additional field sections/units and closure sections
- Show proposed method to stabilize the structure
- Temporary bracing
- Crane locations
- Ballast for cantilevered construction
- Post-tensioning details (for drop-in spans)
- Indicate whether a girder is designed for a particular construction method (e.g., specific pick point locations, balanced cantilever construction, etc.)
- Necessary jacking information including stiffness parameters for the pier columns
- Diaphragm or cross frame connection notes
- Deck casting notes
- Other project specific notes not covered in the General Notes

Add the following note to the Erection Details sheet: "Following the proposed erection sequence does not relieve the Contractor from the requirements of Section 615 of the Standard Specifications".

4.4.1.14 Approach Slabs

This sheet(s) shall contain, but not be limited to, the following applicable information:

- Plan View
  - Dimensions necessary for construction
  - Reinforcing steel layout with bar marks
  - Section arrows both transverse and longitudinal
  - For integral/semi-integral abutments, detail the gap between the approach slab and rigidly supported items, to allow for anticipated movements
- Section Views
  - Dimensions of each section
  - Reinforcing steel layout with bar marks

- For integral/semi-integral abutments the following joint details at the end of the approach slab shall be used unless directed otherwise by the Bridge Project Manager
  - Use Type H joint for asphalt approach
  - Use Type J joint for concrete approach (this joint has its own pay item)
- Notes
  - Quantity table of the area of each approach slab
  - Reinforcing bar list for each approach slab
  - All notes regarding the approach slab
  - Note - approach slabs and their quantities are roadway items; not bridge items

4.4.1.15 Situation Plan

This sheet(s) shall include all items from the General Plan and Elevation sheet plus the following applicable information:

- Plan View
  - Right-of-way limits, including all easements and utilities
  - Existing structures within project limits (e.g., existing bridge, dwellings, walls, etc.)
  - Core boring hole locations
  - Contours including finished grading contours
  - Utilities and their disposition
  - Highway signage and lighting features
  - Dimension limits of scour protection
  - Dimension limits of slope protection
  - Fill slopes
  - Temporary bridge
  - Temporary detour
  - Limits of select embankment or foundation protection
  - Berms, ditches, etc.
  - Deck drains
- Elevation View
  - Actual footing elevation for pile footings and the estimated and minimum pile tip elevation
  - Elevation of low bridge seat for each substructure unit
  - Limits of foundation protection at substructure units
  - All applicable hydraulic information
- Additional information
  - Hydraulic data
  - Traffic data
  - Core boring locations table

4.4.1.16 Core Borings

This sheet(s) shall contain, but not be limited to, the following applicable information:

- Complete boring logs including technical descriptions and general descriptions of strata
- All necessary geotechnical parameters including RQD, percent recovery, blow count, sample type, etc.
- Elevations at the top of borings
- Foundation and pile tip elevation
- Station and offset of each boring

4.4.1.17 Existing Bridge Plans

Sheets from the existing bridge plans, if available, shall be attached.

4.4.1.18 Load Rating Sheets

The Load Rating sheets shall contain the following information. Sample rating sheets are available from the WVDOH.

- Girder elevation showing critical rating locations
- Section properties for steel beam/girder bridges, including
  - Span number
  - Location in span
  - Yield strength for top flange, bottom flange and web
  - Top and bottom flange thickness or size of rolled beam
  - Web depth and thickness
  - Section modulus with respect to the top and bottom flanges for the
    - Non-composite section
    - Composite section for positive moment (steel girder plus deck concrete for both n and 3n modular ratios)
    - Negative flexure section (steel girder plus longitudinal deck reinforcing)
- Section properties for prestressed concrete beam bridges, including
  - Span number
  - Location in span
  - Concrete compressive strength f'c, and allowable tension and compression
  - Girder cross-section area
  - Section modulus with respect to the top and bottom flanges for the
    - Non-composite section
    - Composite section
  - Section modulus with respect to the top and bottom rows of prestressing strands

        - Non-composite section
        - Composite section
    - Girder flexural strength and shear strength at all critical section locations
- Design service moment and shear for steel beam/girder bridges
    - Service load moment and shear due to non-composite dead load (DL_1), composite dead load (DL_2) and live load including impact for the rating vehicle (HS20 for tangent structures and HS25 for curved structures) at all critical section locations and flange transitions along the length of the girder
- Design service moment and shear for prestressed concrete beam bridges
    - Service load moment and shear due to non-composite dead load (DL_1), composite dead load (DL_2) and live load including impact for the rating vehicle (HS20) at all critical section locations
    - Axial load and moment due to the effective prestress force after all losses at all critical section locations
    - Secondary moments due to prestressing forces at all critical locations for post-tensioned concrete beams only
- For tangent structures designed using line girder analysis, provide live load distribution factors for moment and shear calculated based on the Governing Specifications.
- For curved structures and tangent structures designed using refined analysis, provide conversion factors for live load moment and shear.
    - Provide sample calculations on the plan sheet that demonstrate the derivation and use of the conversion factors provided. The example calculations shall be based on actual values provided for the design girder on the plans, such that the reader can follow the computations by comparing them to the original plans.
    - Identify the number of traffic lanes loaded in the refined analysis.
- Sample rating calculations should be performed at the location where the loading rating is critical and included with the load rating sheets
- Load rating table
    - Provide a load table as shown below
    - Rating values provided shall be given in tons

LOAD RATING TABLE (TONS)				
RATING	H	HS	3S2	TYPE 3
INVENTORY (IR)				
OPERATING (OR)				

4.4.2 Reinforcing Schedules

Reinforcing schedules shall contain a table(s) of each component listed (e.g., Abutment 1 Pier 1, etc.), and all bars pertinent to that component. Details of all bent bars used shall be provided on the sheet(s). Refer to CRSI for bend type and nomenclature. The

minimum lap splices for each bar size shall be listed. Any specialized notes pertaining to reinforcing steel not included in the General Notes shall be placed on this sheet(s).

Use common bar marks for the same bars in different substructure units. Change prefixes as needed (e.g., PA501 or PB501, for Pier A and Pier B respectively).

4.5 BASIC LAYOUT – RETAINING WALLS

4.5.1 Drawing Sequence

The following order of sheets should be followed for the preparation of contract plans for Retaining Wall projects:

- General Notes
- Index of Drawings
- Estimate of Quantities
- Plan and Elevation
- Typical Wall Sections
- Reinforcing Schedule
- Miscellaneous Details
- Situation Plan
- Core Borings

4.5.1.1 General Notes

This sheet shall contain the following information:

- General Notes
    - Governing Specifications
    - Design strengths for concrete and reinforcing steel
    - Material notes for concrete, reinforcing steel, steel or concrete piling, sheet piling and lagging and drilled caissons
    - Design loads
    - Excavation
    - Safety factors utilized in the wall design
    - Wall design parameters and notes
    - Allowable bearing pressure pile/drilled caisson design loading
    - Requirements for wall surface texture or other aesthetic treatment
    - Special provisions
    - Construction sequence
    - Maintenance of traffic and phase construction
    - Special railroad requirements

- Special environmental requirements
- Special Coast Guard requirements
- All abbreviations used in the set of plans
- Special notes that are project or site specific

4.5.1.2 Index of Drawings

This sheet shall consist of an index of drawings table with the sheet number and title.

4.5.1.3 Estimate of Retaining Wall Quantities

The Estimate of Retaining Wall Quantities table shall contain the following applicable items along with pay item numbers and descriptions:

- Concrete quantities coordinated with detail sheets
- Area of MSE retaining wall
- Reinforcing steel bar quantities coordinated with detail sheets
- Excavation and backfill quantities
- Sheet piling and concrete lagging quantities
- Piling or drilled caisson quantities
- Miscellaneous quantities associated with wall (sealing, riprap, etc.)

4.5.1.4 Plan and Elevation

The Plan and Elevation sheet(s) shall contain a plan and elevation drawing for each of the retaining walls of the project. The sheet(s) shall contain, but not be limited to, the following applicable information:

- Plan View
  - North arrow
  - Plan view of the wall
  - Plan view of the footings, for cast-in-place (CIP) walls only
  - Horizontal alignment information including all complex geometric information
  - Beginning and ending wall work points by station and offset with respect to centerline of construction
  - Additional points as necessary to tie wall alignment to adjoining roadway alignment(s)
  - Limits of MSE wall embankment
  - Locations of typical sections
  - Locations of construction and expansion joints
  - Indicate the exterior face of wall and the type of barrier if any
  - Beginning and ending of barrier by station, offset and roadway alignment

- Retaining wall layout dimensions
- Substructure footing dimensions referenced to front face of the retaining wall for CIP walls only
- Drilled caisson size and spacing for CIP walls only
- Pile size, batter, and spacing
- CIP walls require a footing layout plan showing reinforcing layout and bar marks.
- Wall mounted signing and lighting and any utilities

- Elevation View
  - Station and elevation for each critical point on the wall
  - Length of wall segments and total wall length
  - Existing ground line along wall alignment
  - Finished ground surface in front of the wall
  - Top of retaining wall, top of coping and gutter line
  - Vertical alignment data along with top of wall elevations at 25 FT intervals
  - Top of barrier and top of CIP pads
  - Elevations of top of footings for CIP walls only
  - Footing elevation for pile or drilled caisson footings and the estimated pile or drilled caisson tip elevation for CIP walls only
  - Elevation of top of leveling pad and depth of undercut for MSE walls
  - Elevation of top and bottom of lagging and steel piling for a retaining wall with steel solider pile and lagging
  - Approximate rock surface profile
  - Location of section views
  - Reinforcing steel layout with bar marks for CIP walls only
  - Locations of construction and expansion joints
  - All dimensions necessary for construction of the retaining walls

4.5.1.5 Typical Wall Sections

- CIP retaining walls
  - Reinforcing steel with bar marks
  - Dimensions necessary for construction
  - Limits of structure excavation
  - Limits of select material for backfill
  - Weep hole or any drainage items
  - Pile spacing and size or drilled caisson size
  - Embedment of piles or drilled caissons
  - Construction joints
  - Existing ground line
  - Finished ground line in front of the wall
  - Finished grade behind the wall including any roadway drainage
  - Wall mounted signing and lighting
  - Utilities passing through the wall

  - Parapet details
  - Specific notes
- MSE retaining walls
  - Coping details
  - Barrier and moment slab details
  - Reinforcing steel for coping, barrier and moment slab with bar marks
  - Dimensions necessary for construction
  - Limits of structure excavation
  - Limits of select material for backfill
  - Limits of random material for backfill
  - Drainage items
  - CIP leveling pad
  - Bottom of undercut
  - Existing ground line
  - Finished ground line in front of the wall
  - Finished grade behind the wall including any roadway drainage
  - Wall mounted signing and lighting
  - Utilities passing through the wall
  - Barrier for roadway in front of the wall
  - Specific MSE wall design notes
  - Soil reinforcement data
  - Pipe sleeve for any adjacent abutment piling
- Solder pile with lagging retaining walls
  - Coping details
  - Barrier and moment slab details
  - Reinforcing steel for coping, barrier and moment slab with bar marks
  - Dimensions necessary for construction
  - Limits of structure excavation
  - Limits of select material for backfill
  - Drainage items
  - Lagging
  - Pile size
  - Bottom of pile tip elevation
  - Existing ground line
  - Finished ground line in front of the wall
  - Finished grade behind the wall including any roadway drainage
  - Wall mounted signing and lighting
  - Utilities passing through the wall
  - Barrier for roadway in front of the wall
  - Specific soldier pile wall design notes
  - Specific notes

4.5.1.6 Reinforcing Schedules

- See Section 4.4.2

4.5.1.7 Miscellaneous Details

This sheet shall contain any of the following details and any other details necessary for the construction of the retaining walls:

- Architectural surface treatment detail
- CIP gutter details
- Wall expansion and contraction joint details
- Wall corner detail(s)
- Barrier reinforcement details
- Temporary shoring details

4.5.1.8 Situation Plan

This sheet(s) shall contain, but not be limited to, the following applicable information:

- Right-of-way limits and utilities
- Core boring hole locations
- Contours including finished grading contours
- Designation of all walls
- Wall location with station and offset with respect to centerline of project for each critical point
- Roadway alignment information
- Barrier locations
- Limits of MSE wall embankment
- North arrow
- Temporary detour

4.5.1.9 Core Borings

This sheet(s) shall contain, but not be limited to, the following applicable information:

- Complete boring logs including technical descriptions and general descriptions of strata
- All necessary geotechnical parameters including RQD, percent recovery, blow count, sample type, etc.
- Elevations at the top of borings
- Foundation and pile or drilled caisson tip elevation
- Station and offset of each boring

SECTION 5 - STANDARD DRAWINGS

5.1 STANDARD BRIDGE PLANS

The following standard bridge plan drawings can be found in the *Standard Details Book Volume 3 Bridges and Miscellaneous Structures*.

As of this printing, the following standard drawings have been designed using the LFD Code. Therefore, these plans are to be used only with the permission of the Bridge Project Manager.

Title	Sheet	Last Rev. Date
Superstructure Plan - Normal Crossing	BR-1	11-91
Superstructure Plan - Left Forward Skew	BR-1	11-91
Superstructure Plan - Right Forward Skew	BR-1	11-91
Superstructure Plan on Piling Normal Crossing	BR-1A	11-91
Superstructure Plan on Piling Left Forward Skew	BR-1A	11-91
Superstructure Plan on Piling Right Forward Skew	BR-1A	11-91
General Notes	BR-2A	8-93
General Notes	BR-2B	11-90
Concrete Abutment Bridge Seat Details - LT Forward Skew	BR-7S	11-91
Concrete Abutment Bridge Seat Details - RT Forward Skew	BR-7S	11-91
Steel Beam Stringers and Timber Deck	BR-10	9-88
Dowel Laminated Timber Deck	BR-10A	9-88
Steel Beam Stringers and Steel Grid Deck	BR-11	3-92
Modified Steel Grid Details Open Type	BR-11M	9-88
Shoe Assemble Detail Span 60'-0" or Less	BR-12	11-91
Shoe Assemble Detail	BR-12L	9-88
Concrete Abutment Layout	BR-13	9-88
Concrete Abutment on Piling	BR-P13	9-88
Concrete Abutment on Piling - Reinforced Steel Details	BR-P14	9-88
Concrete Abutment on Piling - Left Wingwall Details	BR-P15	9-88
Concrete Abutment on Piling - Right Wingwall Details	BR-P16	9-88
Concrete Abutment on Piling - Range 1, 2, & 3	BR-P17	3-91
Concrete Abutment on Piling - Range 4 & 5	BR-P17	3-91
Reinforced Concrete Abutment - Reinforcing Steel Details	BR-14	9-88
Bridge Seat Details - Left Forward Skew	BR-14S	9-88
Bridge Seat Details - Right Forward Skew	BR-14S	9-88

Title	Sheet	Last Rev. Date
Left Wingwall Details	BR-15	9-88
Right Wingwall Details	BR-16	9-88
Abutment Footing - Range 1, 2, & 3	BR-17	9-88
Abutment Footing - Range 4 & 5	BR-17	9-88
Abutment Footing	BR-17A	9-88
12" Prestressed Plank Beam Design and Assemble Details	BR-S12A	9-96
Design Table for 12" Prestressed Plank Beam	BR-S12B	9-96
17" Prestressed Box Beam Design and Assemble Details	BR-B17A	9-96
Design Table for 17" Prestressed Box Beam	BR-B17B	9-96
21" Prestressed Box Beam Design and Assemble Details	BR-B21A	9-96
Design Table for 21" Prestressed Box Beam	BR-B21B	9-96
27" Prestressed Box Beam Design and Assemble Details	BR-B27A	9-96
Design Table for 27" Prestressed Box Beam	BR-B27B	9-96
33" Prestressed Box Beam Design and Assemble Details	BR-B33A	9-96
Design Table for 33" Prestressed Box Beam	BR-B33B	9-96
42" Prestressed Box Beam Design and Assemble Details	BR-B42A	9-96
Design Table for 42" Prestressed Box Beam	BR-B42B	9-96
Prestressed Box Beam Design and Assembly Details	BR-B100	9-96
Prestressed Box Beam Design and Assembly Details	BR-B101	9-96
Prestressed Box Beam Design and Assembly Details	BR-B102	9-96
Prestressed Box Beam Transverse Post-Tensioning Design and Assembly Details	BR-B103	9-96
Prestressed Box Beam Design and Assembly Details	BR-B104	9-96
Gluelam Timber Superstructure Plan - Normal Crossing	BR-T1	9-88
Gluelam Timber Superstructure Plan - Right Forward Skew	BR-T1	9-88
Gluelam Timber Superstructure Plan - Left Forward Skew	BR-T1	9-88
Gluelam Timber Superstructure Plan - General Notes	BR-T2	9-88
Gluelam Timber Superstructure Deck Fastening Details	BR-T3	9-88
Gluelam Timber Superstructure Diaphragm Details	BR-T4	9-88
Gluelam Timber Superstructure Guardrail Post Details	BR-T5	9-88
Gluelam Timber Superstructure Girder Anchorage Details	BR-T6	9-88
Reinforced Concrete Pier on Piles Pier Layout	BR-PP1	2-94
Reinforced Concrete Pier Stem Details (Square Nose)	BR-PP2	2-94
Reinforced Concrete Pier Stem Details (Rounded Nose)	BR-PP3	2-94
Reinforced Concrete Pier Footing on Piling	BR-PP4	2-94
Reinforced Concrete Pier Layout	BR-PS1	2-94
Reinforced Concrete Pier Details (Square Nose)	BR-PS2	2-94
Reinforced Concrete Pier Details (Rounded Nose)	BR-PS3	2-94

5.2 TYPICAL SECTIONS AND RELATED DETAILS

As of this printing, the following standard drawings have been designed using the LFD Code.

Title	Sheet	Last Rev. Date
Guardrail Installation on Bridge Parapets	62	2000
Guardrail Installation on Box Culverts and Bridges	63	2000
Guardrail Installation on Box Culverts and Bridges	64	2000
Guardrail Installation on Box Culverts and Bridges	65	2000

SECTION 6 - COMPUTER DESIGN SOFTWARE

6.1 GENERAL INFORMATION

The Designer may use any program to produce the required design or other output. When computer files are transferred as part of the design or review process, the files shall be compatible with the WVDOH's computer programs as follows:

- Word processing documents shall be compatible with Microsoft Word.
- Spreadsheets should be compatible with Microsoft Excel.
- Databases should be compatible with Microsoft Access.
- CADD drawings shall be compatible with the latest version of MicroStation.

6.2 HYDRAULIC PROGRAMS

Hydraulic analysis should be done using one of the following programs:

- HEC-2 (US Army Corps of Engineers)
- HEC-RAS (US Army Corps of Engineers)
- WSPRO (Federal Highways Administration)

The Designer shall verify with the Bridge Project Manager which of the above programs is appropriate for the bridge project.

Other programs may be considered with approval from the Director of Engineering Division.

6.3 ACCOUNTABILITY

The Designer is ultimately responsible for the use and interpretation of all computer-generated results, whether the program is at fault or not.

SECTION 7 - SHOP DRAWINGS

7.1 INTRODUCTION

All shop drawings submitted shall be in accordance with DD-102 and the Standard Specifications, including the latest Supplemental Specifications. Additional information regarding shop drawings may be found in *Shop Detail Review/Approval Guidelines* developed by the AASHTO/NSBA Steel Bridge Collaboration. Copies are available at their website, www.steelbridge.org.

A list of Material Procedures (MP's) is also available at www.wvdot.com, which contain information on how inspection procedures are done and what procedures are used.

If the proposed shop drawings alter the General Contractor's operations, the Designer shall obtain approval from the General Contractor prior to approving the shop drawings.

7.2 REQUIRED INFORMATION

To be approved, the following information must be shown on all shop drawings:

7.2.1 General

- Title Block
  - State project number
  - Federal project number
  - Bridge name and (design) number
  - Contractor's name
  - Fabricator's name and mailing address
  - Sheet number
- Specifications
  - Correct version identified
  - Correct materials
  - Current AASHTO designations

7.2.2 Structural Steel

- Framing plan with girder layout
- Principal controlling dimensions
  - Span lengths
  - Girder lengths
  - Lateral beam spacing
  - Splice locations and bolt pattern layout
  - Diaphragm/cross-frame location
  - Section sizes
    - Web and flange plates of welded members
    - Rolled beams
- Bearing locations
- Material properties
  - Material and material testing
  - Designation of material, tension zones and welds for fracture critical members (FCM's), including applicable nondestructive testing
- Connections
  - Stiffener and connection plates
  - Bolted splices
  - Number and spacing of bolts in floor beam and cross girder connections as well as special attachments
- Cross-frames and diaphragms
- Camber and/or mid-ordinate for cambered rolled beams or girder sections
- Elevation at center of span or segment, field splice, abutment and pier ordinates on shop assembly diagrams
- Erection framing plan details
- Incorporation of all necessary revisions into the shop detail drawings
- General notes and detail sheets relative to cleaning and painting

7.2.3 Prestressed Concrete

- Framing plan with girder layout
- Cross section
  - Dimensions
  - Strand locations
- Principal controlling dimensions
  - Span lengths
  - Girder lengths
- Material strengths
- Stresses
  - Initial
  - Final

- Prestressing strand
  - Type (e.g., low relaxation)
  - Size
  - Position
  - Draping
  - Jacking force
  - Strand cutting procedure and order
- Reinforcing steel bars
  - Grade
  - Size
  - Position - **no tack welding**
  - Reinforcement detail
- Debonding
  - Correct location/length
  - Shielding
- Special details
  - Post-tensioning details
  - Drain location and type
  - Inserts for attachments (e.g., guardrail attachments, downspout supports, cross-frames or diaphragms)

7.2.4 Timber

- Species and grade
- Member dimensions
- Preservative treatment
- Bolt types
- Holes
  - Position
  - Size
  - Method
- Camber

7.2.5 Other Items Subject to Approval

- Dimensions, laminations for reinforced elastomeric bearings and PTFE bearings
- Material specifications
- Bolts (anchor bolts, etc.)
- Special cases
  - Vendor designed items such as pot bearings, modular expansion devices, etc.

7.3 APPROVAL PROCEDURES

7.3.1 Prior to Approval

The Fabricator shall submit three (3) copies of each set directly to the WVDOH or Consultant with copies of all transmittal letters to the Contractor, WVDOH Central Office and the District Construction Engineer. Copies of all subsequent letters shall also be sent to these offices.

Depending on the complexity and number of corrections required, the reviewer may convey comments to Fabricator by:

- Telephone
- Marked drawings
- Letter
- Fax
- E-mail

The Designer/Consultant returns one (1) set to the Fabricator.

7.3.2 Approval

When all corrections are made, the Fabricator/Detailer shall submit nine (9) sets to the WVDOH or Consultant for final approval and distribution.

The shop drawing shall then be stamped "APPROVED".

Shop drawings shall **not** be marked as follows:

- "Approved except for..."
- "Approved as corrected"
- "Approved as marked"
- etc.

Stamp all drawings for each submission with the following:

- Signature/initials of Reviewer
- Date

7.3.3 After Approval

Submit completely approved sets in accordance with DD-102.

7.4 CONTRACT PLAN REVISIONS

Consultants shall obtain approval from the Bridge Project Manager before any approval can be made on shop drawing details or specifications that are different from that in the Contract Plans or Documents. Bridge Project Manager approval may be requested verbally or in writing. If verbal approval is given, the Consultant shall send a letter to the Bridge Project Manager describing the change and confirming the verbal approval. Given this information, the Bridge Project Manager will distribute the revisions to the Shop Inspectors and any other necessary sections to facilitate approval of the structural fabrication.

Consultants shall make the required changes or revisions to the plans and denote on them that revisions have been made. Replacement plan sheets shall be submitted to the Bridge Project Manager for approval of all changes.

APPENDIX A – MISCELLANEOUS PLAN NOTES

A.1 MANDATORY PLAN NOTES

A.1.1 Weathering (Unpainted) Steel Bridges

Note: All references in these notes are to the WVDOT, DOH Standard Specifications, Roads and Bridges, Adopted 2000 as amended by the Supplemental Specifications dated January 1, 2003.

STRUCTURAL STEEL

All structural steel, except as noted, shall meet AASHTO M270 Grade 50W, except girder flanges, webs, and splice plates shall meet Grade 50W-T2.

Anchor bolts, nuts and washers, and deck drainage components may be manufactured from ordinary mild steel and shall be hot-dip galvanized according to AASHTO M 111 after fabrication. The fabricator's shop drawings shall identify the material specification and grade for each item and are subject to approval of the Engineer.

High strength fasteners shall meet Section 709.24 and shall be black (uncoated) Type 3 (weathering steel). The high strength fasteners used in regions of the structure that require painting shall be Type 1 or 3 and shall be mechanical galvanized.

Before assembling the high strength bolted connections, remove all loose and non-adherent rust that may have formed on the connection areas by hand or power wire brushing.

BLAST CLEANING AND PAINTING

Upon completion of all fabrication operations in the shop, and before shipment to the project site, all weathering steel bridge components shall be blast cleaned to a Near White surface condition according to SSPC-SP 10. Prior to the start of any blast cleaning, all oil, grease, cutting fluids, or other foreign matter shall be removed from the surfaces of the steel by solvent cleaning according to SSPC-SP 1.

The members or portions of members listed below shall be blast cleaned and shop painted according to Section 688 of the Standard Specifications, PAINTING STEEL STRUCTURES, using the Zinc Rich, Low VOC System, Section 711.22. Apply the full paint system in the fabrication shop, except faying surfaces of high strength bolted

connections, which shall be shop painted with primer only. The color of the final top coat shall be 30045 according to Federal Standard 595 and the Gloss at angle of 60 degrees shall not exceed 25.

a) For integral and semi-integral abutment structures, paint the ends of the girders and all other structural components encased in the concrete abutment plus one additional foot in length.

b) Where expansion joints are specified, paint all steel components under the joint and in both directions from the centerline of the joint for a distance of 1.5 times the girder depth, or 10 feet, whichever is larger. Components specified to be hot-dip galvanized do not require painting.

Areas of the shop applied paint system which are damaged during erection and high strength bolted connection areas that were only prime painted shall be properly cleaned and painted according to Section 688 of the Standard Specifications, PAINTING STEEL STRUCTURES, and to the satisfaction of the Engineer.

After completion of all tightening operations, mechanical galvanized fasteners shall be solvent cleaned and field painted as specified for the structural steel.

Include cleaning and painting costs in Item 615001-*, Steel Superstructure.

For integral and semi-integral abutment structures, the crevice/interface between the embedded steel and the concrete shall be suitably chamfered to provide for placement of a sealant. Seal the crevice with a sealant material meeting the requirements of ASTM C920, Type S, Grade NS, Class 25, Uses NT and M. Sealant shall be suitable for bonding between concrete and the top coat of the specified paint system. Acid-cure sealants are not allowed. Include payment in Item 615001-*, Steel Superstructure.

IDENTIFICATION MARKING STEEL MEMBERS

All steel mill and fabricator identification markings for steel plates, shapes, or fabricated members shall be by metal tags, soapstone, or some other readily removable material; or, shall be marked in an area of the completed member which will be encased or covered with concrete. Marking methods and locations are subject to approval of the Engineer.

Do not use paint or wax-based crayons for marking.

HANDLING AND STORING STEEL MEMBERS

Steel members must not be gouged, scratched, dented, or allowed to rub against other members that would result in damage to the blast cleaned profile of the steel. Members shall be handled using softeners and slings instead of chokers and chains.

Store members in the fabrication shop and on the project site in such a manner as to be kept free and clean of all foreign substances such as grease, oil, mortar and concrete, splatter, chalk and crayon marks, paint, and dirt. All storage must be above ground and sloped to allow free drainage of melted snow, rainwater, and dew. If the members are stored for periods longer than three months, the members must be placed on metal supports. For periods of storage up to 3 months, members may be placed on clean, untreated, wood timbers.

Store plate girders and rolled beams with the web in the upright position. The members may be stacked provided metal or wood supports, as noted above, separate individual members. Under no circumstances shall members be nested together or bundled.

Do not allow treated lumber or treated timber to contact steel members. Contact with clean, untreated lumber or timber will not damage the steel members.

FINAL CLEANUP OF STRUCTURAL STEEL SURFACES

Upon completion of all concrete curing operations, the contractor shall clean all steel surfaces to remove all grease, oil, concrete residue, dirt, and other foreign substances to the satisfaction of the Engineer.

Cleaning may be by high pressure water, power or hand wire brushing, or by Brush-off Blast Cleaning according to SSPC-SP 7. Cleaning shall be followed by a clean water rinse to remove all residues of detergents and cleaners if they were used. All grease and oil shall be removed prior to the clean water rinse by Solvent Cleaning.

Do not use acids to remove stains.

Include costs for final cleanup of steel surfaces in Item 615001-*, Steel Superstructure.

PROTECTION OF CONCRETE SUBSTRUCTURE

Before placing any steel superstructure members on the concrete substructure units, the Contractor shall coat all exposed areas of the abutment, tops, sides, and all faces of pier caps and pier stems to the ground or water line elevation with an approved silane based concrete sealer. Preparation of surfaces, application rates, and methods shall be as recommended by the silane manufacturer.

The Contractor shall take appropriate measures to protect the concrete substructure from rust staining during construction and curing of superstructure concrete. Water runoff from concrete curing operations shall be deflected away from the steel girders and shall not drain onto the substructure concrete after contacting the weathering steel.

Upon completion of all superstructure concrete curing operations, the Contractor shall remove all rust stains from substructure units using proprietary chemical stain removers or mild acid etching. Abrasive blast cleaning may be used to supplement the other cleaning methods if the stained areas are severe or extensive. All cleaning methods shall be subject to approval of the Engineer.

Re-coat all areas where rust stains were removed, regardless of the cleaning method used, with an approved silane based concrete sealer as specified above.

Include the cost of silane coating, protecting, cleaning, and re-coating substructure units in Item 601-02, Class B Concrete.

A.1.2 Deck Removal

DECK REMOVAL - GRINDING NOTE

After removal of the deck, the tension and stress reversal areas of the beam top flanges shall be inspected for the presence of unauthorized welds which may have been placed during the construction of the original deck, or during subsequent maintenance operations. Any such welds discovered shall be removed by thermal cutting the welds, or welds attaching the temporary member, to within ¼ inch of the flange surface followed by grinding the remaining weld flush with the beam flange, or as may be otherwise directed by the Engineer. After grinding, the ground area of the beam flange shall be inspected by the contractor using magnetic particle (MT) testing to assure the absence of any cracks. Magnetic particle testing shall be performed in accordance with the ANSI/AASHTO/AWS Bridge Welding Code D1.5 (BWC). Personnel performing the MT shall also be qualified in accordance with the BWC.

All grinding and MT shall be witnessed by individuals qualified as a Certified Welding Inspector (CWI) in accordance with the American Welding Society Standard for Qualification and Certification of Welding Inspectors QC-1. The Contractor shall notify the Engineer at least 48 hours prior to the start of any grinding or nondestructive testing. All work and costs associated with removal of the unauthorized welds, including MT and witnessing the work by the CWI, shall be paid to the contractor as Force Account Work in accordance with Section 109.4 of the Standard Specifications. Appropriate time extensions will be given due consideration by the Engineer.

A.1.3 Steel Stud Shear Connectors

STEEL STUD SHEAR CONNECTORS

When design requires the use of welded stud shear connectors, they shall meet the requirements of Section 7 of the ANSI/AASHTO/AWS D1.5, Bridge Welding Code.

No shop installation of welded stud shear connectors shall be permitted except as follows:

The contractor may shop install shear studs to the beam or girder for the purpose of attaching a worker fall protection system. Only the shear studs required to properly install and support the worker fall protection system may be installed in the shop. The remaining shear studs for an individual row across the beam or girder flange may also be installed in the shop. All shop installed shear studs shall be shown on the shop drawings.

The field installation of the welded stud shear connectors shall not commence prior to the installation of the deck forms in the area surrounding the welded stud shear connectors. Overhanging deck forms may be installed after the welded stud shear connectors are installed. The welded stud shear connectors and deck forms shall be installed in a sequence that permits workers access through the deck area without walking through installed welded stud shear connectors.

A.2 TYPICAL PLAN NOTES

A.2.1 Elastomeric Bearing with Load Plate

Exercise caution while making field or shop welds while an elastomeric bearing pad is in contact with the steel. In no case shall the elastomer or elastomer band be exposed to instantaneous temperatures greater than 400°F. Any damage to the elastomeric bearing due to welding will be cause for rejection. The temperature shall be monitored by heat crayons furnished by the Contractor.

A.2.2 Strip Seals

The strip seal gland shall be delivered to the jobsite in lengths suitable for continuous one-piece installation for each individual expansion joint. Field splicing of a strip seal gland is not permitted.

Special conditions such as doglegs, tees, and crosses shall be shop fabricated in a mold under heat and pressure.

A.2.3 Finger Joints

The fabrication and erection of the fingerplate shall be in accordance with the approved shop drawings and bridge deck grade and crown (profile). The openings shall be preset prior to shipment and assembled with temporary shipping angles. The fingerplate shall be installed under the supervision of the supplier.

[This page left intentionally blank]

The drainage trough shall not be spliced unless indicated on the approved shop drawings. When splices are indicated, the splices shall be shop vulcanized by the Manufacturer. Longitudinal splices are not permitted.

The Manufacturer shall be required to submit a detailed report substantiating the testing performed on its joint design and showing the corresponding fatigue resistance line generated from the actual fatigue testing data.

After the expansion joint is installed, it shall be tested for water tightness by flooding the expansion joint with water and inspecting from below.

A.2.4 Retaining Walls

The quantity of earthwork shown in the plans should NOT INCLUDE any work within the wall pay limits shown in the plans. Any excavation inside the pay limits of the wall is included in the price of the wall. The contractor is responsible for any cost of changes in waste, borrow, or earthwork quantities from those shown in the plans caused by the requirements of the proposed wall system. Any adjustments to the required amount of embankment or select granular backfill due to the particular wall system proposed by the contractor shall be considered incidental to the project.

The measurement of a particular wall systems item quantity shall be the gross area in square feet lying in a plane outside the front face of the wall from the minimum embedment depth (i.e. top of the footing or leveling pad) to the top of the wall excluding barriers.

The price of an MSE wall item shall include (in place): facing elements, soil reinforcing and attachment devices and associated hardware, coping and trim or similar items that are normal parts of the wall construction. Additionally, the price shall include all the following items shown within the pay limits on the plans (in place): select granular backfill, excavation, embankment, foundation preparation and leveling pads.

Barriers are considered a separate item.

The price of a cast-in-place wall item shall include (in place): concrete, reinforcing steel, joint materials, underdrains, weepholes or similar items that are normal parts of wall construction. Additionally, the price shall include all the following items shown within the pay limits on the plans (in place): select material for backfill, excavation, embankment and foundation preparation.

A.2.5 Deck Slab Overhang Form

Deck slab overhang forms shall be supported from the bottom flange of fascia girders or stringers. The Contractor shall submit forming plans and supporting calculations for the overhang to the Engineer for approval prior to erecting the formwork.

A.2.6 Erection Requirements

The Contractor's attention is directed to Sections 615.6, Erection and 615.2.2, Erection Drawings, of the Standard Specifications.

A.2.7 Lead Based Paint Coating

Project plans for repair, renovation, rehabilitation, replacement or demolition of existing highway bridges that contain lead based coatings shall contain a note as follows:

The Contractor's attention is directed to the fact that the existing structure contains lead based paint coatings.

A.2.8 Asbestos

Project plans for repair, renovation, rehabilitation, replacement or demolition of existing highway bridges must have an asbestos inspection per DD-313. A copy of the asbestos inspection report must be added to the contract proposal. The asbestos inspection report will identify if any asbestos is present. If asbestos is found to be present Item 681001- ASBESTOS ABATEMENT, NUMBER must be bid and a the following note is to be in the project plans:*

The Contractor's attention is directed to the fact that the existing structure contains asbestos.

APPENDIX B – PERMIT CHECKLISTS

B.1 GENERAL

The following lists (taken from DD-202) are required for Corps of Engineers and Coast Guard Permits. **Please refer to the agency publications for complete information.**

B.2 US ARMY, CORPS OF ENGINEERS

B.2.1 Nationwide Permits

- USGS topographic location map
- Quantity tables
- Plan view
- Cross section
- Narrative
- Environmental clearance (can be a draft)
- FEMA/NFIP letter or statement from a Professional Engineer verifying that the project will comply with FEMA regulations
- Coordination letters

B.2.2 Individual Permits

- Items included in B.2.1, Nationwide Permits
- Individual permit application (Form ENG 4345)
- Project location map
- Sheet layout map (≥ 4 pages)
- Impact location map(s) – 8 ½ IN x 11 IN <u>only</u>
- Detail(s)
- Summary tables
  - Water body impacts
  - Open water body impacts
  - Wetland impacts
  - Utility impacts
  - Impact summary table
- 404(b)1 alternatives analysis
- Adjacent property owner tables
- Compensatory mitigation proposal (conceptual)

B.3 US COAST GUARD (TAKEN FROM USCG *BRIDGE PERMIT APPLICATION GUIDE*, COMDTPUB P16591.3B)

- Letter of application for a permit
  - Applicant information
  - Consultant information (if employed)
  - Project information
  - Authority information
  - Proposed clearances
  - Existing bridge structure at bridge site
  - Removal of bridge(s) (if applicable)
  - Construction activity
  - Environmental effects
  - Required authorizations
  - Other federal agencies with jurisdiction over the proposed project
  - Any applicable attachments
  - Fill (if applicable)
- Adjacent property owners within ½ mile radius
- Underlying studies, reports and other information
- Drawings
  - Vicinity map
  - Plans
  - Location map
  - Plan view
  - Elevation view

APPENDIX C – WVDOH BRIDGE FORMS

C.1 BRIDGE SAFE LOAD CAPACITY – ANALYSIS AND JUSTIFICATION REPORT (FORM DS-25)
(See Pages C-3 to C-4)

BRIDGE SAFE LOAD CAPACITY - ANALYSIS AND JUSTIFICATION REPORT

FORM DS-25 (10/01/03) Page 1 DATE:

(1)District _____ (2)Bridge No. _____ (_____) (3)BARS No. _____

(4)County _____ (5)On Route _____ (6)Legal Road Loads _____

(7)Located _____ (8)Spanning _____

(9)Bridge Type (Main) _____ (10)Roadway Width _____ (11)Date of Construction _____

(12)Span Lengths _____ (13)Total Length _____

(14) ____ School Bus (15) ____ Commercial Traffic (16)Design Live Load _____ (17)ADT _____ in _____

ELEMENT	INVENTORY RATINGS(TONS)						OPERATING RATINGS (TONS)											
	Truck or Lane				Truck		Truck or Lane				Single Truck per Lane							
	H		HS		3S2		H		HS		H		T3		HS		3S2	
(18)Main ( )																		
(19)Floorbeam																		
(20)Connect. ( )																		
	Min	Max	Min	Max	Min	Max	Min	Max	Min	Max	Min	Max	Min	Max	Min	Max	Min	Max
(21)Stringer (Exterior)																		
(22)Stringer (Interior)																		
(23)Other ( )																		

(24)Special Analysis: _____

(25)Ratings obtained by: ____ Stress Analysis ____ Judgement ____ Original Design Loading ____ Other
____ Working Stress ____ Load Factor

Rated by: _____ Date _____ Checked by _____ Date _____

Stresses: Structural Steel _____ ksi (yield) Prestressed Steel _____ ksi Concrete _____ ksi

Other _____

Based on current condition: _____ Yes _____ No If yes, reflecting the results of what inspection? _____

Manuals referenced: 1996 Standard Specifications for Highway Bridges; 1994 Manual for Condition Evaluation of Bridges

(26)Ratings controlled by: A. FCM ___ (Y) ___ (N) B. ___ Original Design ___ Deteriorated Condition ___ Other

(Explain) _____

(27)Safe Load Capacity _____ ___ Temporary ___ Permanent Anticipated repair date _____

(28)Justification of Safe Load Capacity if item 27 is greater than minimum inventory rating:

(29)Present loading restriction(weight limit, speed limit, spacing): _____

(30)Recommended additional restrictions or change in restriction: _____

From: District _____ Page 2 Bridge No. _____(_____)

To: HO

It is requested that a Commissioner's order be issued prohibiting the use of the following bridge to all trucks and other commerical vehicles exceeding the gross load(s) of:

Reason for restriction: (Check as applicable)

____ The structure has been ____ repaired ____ replaced ____ reevaluated, therefore the present posting is being rescinded.

____ The structure has been ____ evaluated ____ repaired ____ reevaluated, and the recommended restriction is required to prevent serious damage to the bridge by vehicular traffic.

Rescind CC Order dated: _____ Restriction: _____ ____ CC Order attached

___ Map attached ___ Silhouette attached Advance posting recommended: ___ Yes ___ No Detour signing: ___ Y ___ N

Detour Route and length: _____

SECTION I : (To be completed for any change in posting except removal)

1. If this posting is for a reduction in loading, what repairs could be made to avoid this change? _____

2. If repairs could be accomplished by State Forces, how long would actual work take during normal work hours? _____

3. Priority of bridge within District? ___ High ___ Medium ___ Low

4. Work scheduled? ___ Yes ___ No If yes, what type of work? _____ Begin: _____ End: _____

5. Could a higher load limit be justified temporarily? ___ Yes ___ No If yes explain: _____

SECTION II: (to be completed with posting requests for less than 15 tons on school bus routes)

1. School Board notified? ___ Yes ___ No Phone Number _____ Date: _____
Who was contacted? _____ Title: _____

2. What are the weights of the buses involved? _____ (Empty) _____ (Loaded) Number of students? ____

3. School Board reaction? ___ Stop service ___ Unload buses ___ Detour ___ Lighter buses ___ Break-up loads
___ No effect Additional comments: _____

4. Detour acceptable by board? ___ Yes ___ No Additional travel distance? _____ miles (show detour on location map)

5. Is upgrading of detour feasible and/or necessary? ___ Yes ___ No If yes, type and cost: _____

DBE	Initials	Date	DE	Initials	Date	OM	Initials	Date
Recommended:			Recommended:			Reviewed by:		

APPROVED BY: _____
DEPUTY STATE HIGHWAY ENGINEER - OPERATIONS

APPENDIX C - WVDOH BRIDGE FORMS

C.2 STRUCTURE INVENTORY AND APPRAISAL (FORM DS-21)
(See Pages C-7 to C-15)

FORM DS-21
7-1-96

WEST VIRGINIA DIVISION OF HIGHWAYS

STRUCTURE INVENTORY AND APPRAISAL

Bridge No.: Prep. By: Date:

ITEM	INVENTORY		
1 *	CARD TYPE	1	1 A
2 *	CONTROL NUMBER (BARS)	3	A
3 *	INVENTORY ROUTE	9	
4 *	MILE POST	18	
5 *	BRIDGE DESIGN NUMBER	24	
6 *	DIRECTION	30	
7 *	FEATURE INTERSECTED	31	
8 *	GROUND LEVEL BYPASS POSSIBLE ("0" = NO, "1" = YES, "2" = TWIN STRUCTURE)	57	
9 *	BYPASS DETOUR LENGTH	58	
10 *	TOLL	61	
11 *	MAINTENANCE RESPONSIBILITY	62	
12 *	OWNER	64	
13 *	BRIDGE CLASSIFICATION	66	
14 *	HISTORICAL SIGNIFICANCE	67	
15 *	LEGAL ROAD LOAD (65,000# = "1", 73,500# = "2", 80,000# = "3")	68	
16 *	DISTRICT	69	
17 **	DATE OF INVENTORY	70	
		NB/EB	SB/WB
18	PERMIT VERTICAL CLEARANCE	74	78
19	PERMIT HORIZONTAL CLEARANCE	82	86

* Indicates items required for non-highway bridge

** No changes from the August 1999 In-Depth Periodic Inspection

FORM DS-21
7-1-96

WEST VIRGINIA DIVISION OF HIGHWAYS

STRUCTURE INVENTORY AND APPRAISAL

Bridge No.: Prep. By: Date:

ITEM	INVENTORY		
1 *	CARD TYPE	1	2 A
2 *	CONTROL NUMBER (BARS)	3	A
3 *	LOCATION	9	
4 *	LATITUDE	34	
5 *	LONGITUDE	39	
6 *	STATE FUNCTIONAL CLASSIFICATION	44	
7 *	PARALLEL STRUCTURE DESIGNATION	45	
8 *	DIRECTION OF TRAFFIC	46	
9 *	TEMPORARY STRUCTURE DESIGNATION	47	
10	BORDER BRIDGE	48	
11	Border Bridge Structure Number	53	
12 *	HIGHWAY SYSTEM OF THE INVENTORY ROUTE	68	
13	DESIGNATED NATIONAL NETWORK	69	
14 *	CITY OR TOWN	70	
15 *	FUNCTIONAL CLASSIFICATION OF INVENTORY ROUTE	75	
16 *	STRAHNET HIGHWAY DESIGNATION	77	
17	BASE HIGHWAY NETWORK	78	
18	LRS INV-RTE, SUB-RTE NUMBER	79	
19	FEDERAL LANDS HIGHWAYS	91	

* Indicates items required for non-highway bridge

FORM DS-21
7-1-96

WEST VIRGINIA DIVISION OF HIGHWAYS

STRUCTURE INVENTORY AND APPRAISAL

Bridge No.: Prep. By: Date:

ITEM	INVENTORY		
1	CARD TYPE	1	3
2	CONTROL NUMBER (BARS)	3	A
3	ROUTE	9	
4	MILEPOST	18	
5	HORIZONTAL CLEARANCE (Feet in Tenths) .	24	
6	TOLL	27	
7	STATE FUNCTIONAL CLASSIFICATION (Route in Item 3) .	28	
8	MINIMUM VERTICAL CLEARANCE, 10 Ft. Width (Feet in Tenths) .	29	
9	BYPASS DETOUR LENGTH	0	
10	NUMBER OF LANES (Route in Item 3) .	35	
11	ROUTE UNDER STRUCTURE -"0", STRUCTURE UNDER STRUCTURE - "1"	37	
12	CONTROL NUMBER OF STRUCTURE UNDER STRUCTURE	38	
13	FEATURE INTERSECTED	44	
14	HIGHWAY SYSTEM	69	
15	FUNCTIONAL CLASSIFICATION OF ROUTE IN ITEM 3	70	
16	DEFENSE HIGHWAY DESIGNATION	72	
17	AVERAGE DAILY TRAFFIC (ADT)	73	
18	DESIGNATED NATIONAL NETWORK	79	
		NB/EB	SB/WB
19	PERMIT VERTICAL CLEARANCE	80	84
20	PERMIT HORIZONTAL CLEARANCE	88	92
21	YEAR OF AVERAGE DAILY TRAFFIC (ADT)	96	
22	AVERAGE DAILY TRUCK TRAFFIC (ADTT)	98	

FORM DS-21
7-1-96

WEST VIRGINIA DIVISION OF HIGHWAYS

STRUCTURE INVENTORY AND APPRAISAL

Bridge No.: Prep. By: Date:

ITEM	INVENTORY		
1	CARD TYPE	1	4 A
2	CONTROL NUMBER (BARS)	3	A
3 *	YEAR BUILT	9	
4	YEAR RECONSTRUCTED	14	
5	YEAR WIDENED	18	
6 *	LANES ON AND UNDER STRUCTURE	22	
7	DESIGN LOAD	26	
8	APPROACH ROADWAY WIDTH (Feet)	27	
9	BRIDGE MEDIAN	30	
10	SKEW	33	
11	STRUCTURE FLARED ("1" = YES, "0" = NO)	35	
12 *	TYPE OF SERVICE	36	
13	NAVIGATION CONTROL	38	
14	NAVIGATION VERTICAL CLEARANCE (Feet)	39	
15	NAVIGATION HORIZONTAL CLEARANCE (Feet)	42	
16	NBIS BRIDGE LENGTH ("Y" = YES, "N" = NO)	46	
17 *	STRUCTURE LENGTH (Feet and Tenths)	47	
18	CURB, SIDEWALK WIDTH (Feet and Tenths) LEFT	52	
	RIGHT	55	
19	BRIDGE ROADWAY WIDTH, CURB-TO-CURB (Feet and Tenths)	58	
20	DECK WIDTH, OUT-TO-OUT (Feet and Tenths)	62	
21	DECK STRUCTURE TYPE	66	
22	WEARING SURFACE/PROTECTIVE SYSTEM	67	
23	TYPE OF FIELD CONNECTION	70	

* Indicates items required for non-highway bridge

FORM DS-21
7-1-96

WEST VIRGINIA DIVISION OF HIGHWAYS

STRUCTURE INVENTORY AND APPRAISAL

Bridge No.: Prep. By: Date:

ITEM	INVENTORY		
1	CARD TYPE	1	5 A
2	CONTROL NUMBER (BARS)	3	A
3 *	HORIZONTAL CLEARANCE (Feet and Tenths)	9	
4 *	MINIMUM VERTICAL CLEARANCE FOR 10 Ft. WIDTH (Feet and Inches)	12	
5	MINIMUM VERTICAL CLEARANCE OVER BRIDGE ROADWAY (Feet and Inches)	16	
6	MINIMUM VERTICAL UNDERCLEARANCE (Feet and Inches)	20	
7	UNDERCLEARANCE - LATERAL RIGHT (Feet and Inches)	25	
8	UNDERCLEARANCE - LATERAL LEFT (Feet and Inches)	29	
9	UTILITIES ON STRUCTURE ("1" = YES, "0" = NO)	32	
10	TOTAL NUMBER OF SPANS - MAIN UNIT	33	
11	TOTAL NUMBER OF SPANS - APPROACH SPANS	35	
	SPAN INFORMATION - SPAN 1		
12 *	SUBSTRUCTURE UNIT: TYPE	37	
	SUBSTRUCTURE UNIT: NUMBER	38	
	SUBSTRUCTURE UNIT: TYPE CONSTRUCTION	40	
	SPAN: SPAN NUMBER	42	
	SPAN: * TYPE	44	
	SPAN: * LENGTH	47	
	* Main Span = "1", Main Approach Span = "2", Other Approach Span = "3"	52	
	SUBSTRUCTURE UNIT: TYPE	53	
	SUBSTRUCTURE UNIT: NUMBER	54	
	SUBSTRUCTURE UNIT: TYPE CONSTRUCTION	56	

* Indicates items required for non-highway bridge

FORM DS-21
7-1-96

WEST VIRGINIA DIVISION OF HIGHWAYS

STRUCTURE INVENTORY AND APPRAISAL

Bridge No.: Prep. By: Date:

ITEM	INVENTORY			
1	CARD TYPE	1	6	
2	CONTROL NUMBER (BARS)	3	A	
3	Information For Spans Other Than Span 1 (Sheet 6 used only for multiple span bridges)			
	SPAN: SPAN NUMBER	9		
	SPAN: * TYPE	11		
	SPAN: * LENGTH	14		
	SPAN: * Main Span = "1", Main Approach Span = "2", Other Approach Span = "3"	19		
	SUBSTRUCTURE UNIT: TYPE	20		
	SUBSTRUCTURE UNIT: NUMBER	21		
	SUBSTRUCTURE UNIT: TYPE CONSTRUCTION	23		
4	SPAN: SPAN NUMBER	25		
	SPAN: * TYPE	27		
	SPAN: * LENGTH	30		
	SPAN: * Main Span = "1", Main Approach Span = "2", Other Approach Span = "3"	35		
	SUBSTRUCTURE UNIT: TYPE	36		
	SUBSTRUCTURE UNIT: NUMBER	37		
	SUBSTRUCTURE UNIT: TYPE CONSTRUCTION	39		
5	SPAN: SPAN NUMBER	41		
	SPAN: * TYPE	43		
	SPAN: ** LENGTH	46		
	SPAN: * Main Span = "1", Main Approach Span = "2", Other Approach Span = "3"	51		
	SUBSTRUCTURE UNIT: TYPE	52		
	SUBSTRUCTURE UNIT: NUMBER	53		
	SUBSTRUCTURE UNIT: TYPE CONSTRUCTION	55		
6	SPAN: SPAN NUMBER	57		
	SPAN: * TYPE	59		
	SPAN: * LENGTH	62		
	SPAN: * Main Span = "1", Main Approach Span = "2", Other Approach Span = "3"	67		
	SUBSTRUCTURE UNIT: TYPE	68		
	SUBSTRUCTURE UNIT: NUMBER	69		
	SUBSTRUCTURE UNIT: TYPE CONSTRUCTION	71		

FORM DS-21
7-1-96

WEST VIRGINIA DIVISION OF HIGHWAYS

STRUCTURE INVENTORY AND APPRAISAL

Bridge No.: Prep. By: Date:

ITEM	INVENTORY
1	CARD TYPE ---------- 1 **7** **A**
2	CONTROL NUMBER (BARS) ---------- 3 **A**
3	TRAFFIC SAFETY FEATURES
	TRAFFIC SITUATION ---------- 9
	BRIDGE RAILING ---------- 10
	TRANSITIONS ---------- 11
	APPROACH GUARDRAIL ---------- 12
	APPROACH GUARDRAIL TERMINAL ---------- 13
4 *	FACILITY CARRIED BY STRUCTURE 14
5 **	LOCAL NAME OF BRIDGE 42
6	TYPE OF TRAFFIC ---------- 26

* Indicates items required for non-highway bridge

** Indicates new State required item for non-highway bridge

FORM DS-21
7-1-96

WEST VIRGINIA DIVISION OF HIGHWAYS

STRUCTURE INVENTORY AND APPRAISAL

Bridge No.: Prep. By: Date:

ITEM	CONDITION AND APPRAISAL					
1	CARD TYPE		1		8	A
2	CONTROL NUMBER (BARS)		3	A		
3	CONDITION ITEMS	WEARING SURFACE - DECK	9			
4		SUPERSTRUCTURE	11			
5		SUBSTRUCTURE	12			
6		CHANNEL AND CHANNEL PROTECTION	13			
7		CULVERTS	14			
8	LIVE LOAD RATING SUMMARY	OPERATING RATING (HS)	15	2		
9		INVENTORY RATING (HS)	18	2		
10		INVENTORY RATING (H or Other)	21			
11	APPRAISAL ITEMS	STRUCTURAL EVALUATION	24			
12		DECK GEOMETRY	25			
13		UNDERCLEARANCE - Vertical and Horizontal	26			
14		APPROACH ROADWAY ALIGNMENT	27			
15		WATERWAY ADEQUACY	28			
16		OPERATING CAPACITY VS. LEGAL LOAD	29			
17	STRUCTURE OPEN, POSTED, OR CLOSED TO TRAFFIC		30			
18	PIER OR ABUTMENT PROTECTION (For Navigation)		31			
19	SCOUR CRITICAL BRIDGES		32			
20	CRITICAL FEATURE INSPECTIONS AND DATES	FRACTURE CRITICAL DETAILS	33			
		DATE OF LAST INSPECTION	36			
		UNDERWATER INSPECTION	40			
		DATE OF LAST INSPECTION	43			
		OTHER SPECIAL INSPECTION	47			
		DATE OF LAST INSPECTION	50			
21 *	DESIGNATED INSPECTION FREQUENCY		54			
22 *	DATE OF INSPECTION		56			
23 *	AVERAGE DAILY TRAFFIC (ADT)		60			
24 *	YEAR OF ADT		66			
25 *	AVERAGE DAILY TRUCK TRAFFIC (PERCENT)		68			
26	FUTURE AVERAGE DAILY TRAFFIC		70			
27	YEAR OF FUTURE ADT		62			

* Indicates items required for non-highway bridge

FORM DS-21
7-1-96

WEST VIRGINIA DIVISION OF HIGHWAYS

STRUCTURE INVENTORY AND APPRAISAL

Bridge No.: Prep. By: Date:

ITEM	CONDITION AND APPRAISAL					
1	CARD TYPE			1	9	A
2	CONTROL NUMBER (BARS)	3	A			
3	SPECIAL POSTING RATINGS AND POSTINGS	RATING		POSTING		
	GROSS LOAD			9		
	H-TRUCK (2-AXLE)	11		13		
	H-TRUCK (3-AXLE)	15		17		
	HS-TRUCK (3-4 AXLE)	19		21		
	3S2-TRUCK (5 AXLES OR MORE)	23		25		
	DATE OF POSTING	27				
	OTHER RESTRICTIONS			31		
	SPEED RESTRICTIONS			32		
4	LIVE LOAD RATINGS - CONTROLLING MEMBER RATINGS					
	INVENTORY (HS)					
	MAIN			34		
	FLOORBEAM			36		
	STRINGER MAX. LAT. SUPPORT			38		
	STRINGER MIN. LAT. SUPPORT			40		
	CONNECTION			42		
	OPERATING (HS)					
	MAIN			44		
	FLOORBEAM			46		
	STRINGER MAX. LAT. SUPPORT			48		
	STRINGER MIN. LAT. SUPPORT			50		
	CONNECTION			52		
5	SPECIAL PERMIT RATINGS					
	H-TRUCK (2-AXLE)			54		
	T-3 TRUCK (3 AXLE)			56		
	HS-TRUCK (3-4 AXLE)			58		
	3S2-TRUCK (5 AXLES OR MORE)			60		
6	METHOD USED TO DETERMINE OPERATING RATING			62		
7	METHOD USED TO DETERMINE INVENTORY RATING			63		

FORM DS-21
7-1-96

WEST VIRGINIA DIVISION OF HIGHWAYS

STRUCTURE INVENTORY AND APPRAISAL

Bridge No.: Prep. By: Date:

ITEM	CONDITION AND APPRAISAL							
1	CARD TYPE					1	0	A
2	CONTROL NUMBER (BARS)	3			A			
	PROPOSED PERMANENT IMPROVEMENT							
3	TYPE OF WORK RECOMMENDED					9		
4	YEAR NEEDED					12		
5	LENGTH OF STRUCTURE IMPROVEMENT	14						
6	BRIDGE IMPROVEMENT COST	20						
7	ROADWAY IMPROVEMENT COST (Approaches)	26						
8	TOTAL PROJECT COST	32						
9	YEAR OF IMPROVEMENT COST ESTIMATE					38		
	PROPOSED MAINTENANCE NEEDS							
10	PAINTING COST	40						
11	YEAR PAINTING NEEDED					44		
12	OTHER MAINTENANCE WORK NEEDED A					46		
	B					48		
	C					50		
	D					52		
13	YEAR OTHER MAINTENANCE WORK NEEDED					54		
14	TOTAL COST OF OTHER MAINTENANCE WORK	56						

NOTES

APPENDIX C - WVDOH BRIDGE FORMS

C.3 SCOUR EVALUATION SUMMARY (FORM DS-34)
(See Pages C-19 to C-20)

FORM DS-34
Revised 6-25-91

SCOUR EVALUATION SUMMARY

(1) Bridge Number _____ (2) BARS Number _____

(3) Name _____

(4) Route _____ (5) County _____ District _____

(7) Stream _____

(8) Location _____ (9) Construction Date _____

(10) Initial Scour Evaluation Priority _____ (11) ADT: _____ in _____

SCREENING

(12) Scour Potential

Yes ____ No ____

(13) Screening Category

(1A), Low Risk _____

(1B), Scour Susceptible _____

(1C), Unknown Foundation _____

(14) Summary of Screening Evaluation (See Note 1):

_____

(15) Recommendations based on screening (See Note 2):

_____

(16) Recommended DS21Code, Sheet 8, Item 19, Col. 3 _____

(17) Screening By _____ Date: _____

Note 1

If structure does not have scour potential and scour potential is checked "No", then it cannot be classified as "Low Risk", "Scour Susceptible" or "Unknown Foundation". If structure is classified as having no scour potential or Low Risk, provide justification for classifying as no scour potential or assigning to Low Risk category. If unknown foundation, provide the action proposed to determine foundation details.

FORM DS-34

SCOUR EVALUATION (19) Scour Potential? Yes _____ No _____

(20) Scour Category? 1A, Low Risk _____ 1D, Scour Critical _____

(21) Summary of Scour Evaluation (See Note 2):

(22) Recommendations based on Scour Evaluation (See Note 2):

(23) Recommended code for DS21, Sheet 8, Item 19, Col. 32: _____

(24) Evaluation By: _____ (25) Date _____

CORRECTIVE ACTION (26) Corrective Action Complete _____

(27) Recommended Revised Code for DS-21, Sheet 8, Item 19, Col. 32 _____

(28) Reported By: _____ Date _____

Note 2

If scour evaluation indicates a scour critical situation then a positive recommendation must be made for needed corrective action, as well as proposed method of implementing the corrective action. Scour critical situations must be documented and tracked as a critical deficiency per the requirements of BMD A-63 and BMD A-64. If scour susceptible, provide results of scour depth analysis and resultant evaluation. Provide additional sheets or details as necessary to adequately document the evaluation.

APPENDIX D - COATINGS

D.1 STEEL COATINGS

D.1.1 General

The steel coatings section is divided into two parts, coatings for new structures and previously painted existing structures. The reason for this separation is that two substantially different criteria exist with regard to coating new versus existing previously painted structures. Included in this section are: an in-depth explanation of coating project containments, a discussion of problems encountered with removal of coatings containing hazardous toxic metal concentrations such as lead and a discussion of abrasive blasting. Also included in this section are: methods of testing for toxic metal concentrations in the existing coatings and methods of testing for soluble salt contamination (chloride) on surfaces prior to and after cleaning.

D.1.2 Coatings for New Structures

D.1.2.1 Types of Coatings Available

- Uncoated weathering steel (Even though it is not a coating, weathering steel is included as an alternate to the standard coating materials. It is included in this section to give the Designer additional information during the decision making process.)
- Galvanizing
- Metalizing (thermal spray applied)
- Zinc-rich primer without topcoats
- Zinc-rich primer with topcoats

D.1.2.1.1 Uncoated Weathering Steel

Section 3.3.9.2 of this manual lists areas of West Virginia where uncoated weathering steel should not be used. FHWA Technical Advisory; T5140.22, *Uncoated Weathering Steel in Structures* dated October 3, 1989, provides information on site locations where the use of uncoated weathering steel should be avoided. These include, industrial areas with fallout from chemical plants, grade separations with "tunnel effects," and low-level water crossings. While not included in the above advisory, the Designer should be aware that structures over deep valleys where high winds are common may be sites where uncoated weathering steel should not be used. The use of deicing salts and the resulting salt spray is blown underneath the structure and can contaminate the uncoated weathering

steel. The salt spray contamination may attack or prohibit the formation of the protective patina layer on the weathering steel surface. If the patina layer is compromised, corrosion of the weathering steel can occur. Furthermore, structural details that prohibit the drying of the weathering steel should be avoided.

D.1.2.1.2 Galvanizing

In this process, steel bridge members are properly prepared and dipped into a tank of molten zinc. Galvanizing of structural members is most often limited by the size of the dipping tank. At present, the maximum size that can be dipped is approximately 75 FT in length. Care must be taken when galvanizing because the high temperature (750° F) of the molten zinc bath can cause warping or distortion of the members. Differential steel thickness of the member can lead to inconsistent zinc thicknesses. There is also some concern that hydrogen embrittlement in weld areas can be caused by the high heat of the galvanizing bath. Steel chemistry can affect the efficiency of the galvanizing process. Advantages of galvanizing are long-term service life, galvanic corrosion protection properties and the ability to perform without any further finish coatings. If galvanizing is being considered, there are many excellent sources of information from the American Galvanizers Association.

D.1.2.1.3 Metalizing (Thermal Spray Applied)

Metalizing is the spray application of a coat of molten metal, usually a combination of zinc and aluminum, onto a prepared surface. The final product is similar to galvanizing without the heat-induced problems. Advantages are: structural members that are too large to place in the galvanizing bath can be metalized, application temperature is lower than galvanizing and the heat generated by the thermal spray process is dissipated quickly. Clear or pigmented seal coats applied over metalizing are often used. Disadvantages are: application rate is somewhat slower than conventional coatings, more labor intensive and requires a higher degree of surface preparation than galvanizing.

D.1.2.1.4 **Zinc-Rich Primer without Topcoats** (711.20) (Section 688.2.9 of the Standard Specifications)

Inorganic zinc-rich primer without topcoats can be used in the same locations as uncoated weathering steel. Advantages are: the primer adds galvanic corrosion protection, can be used untopcoated with no field painting (except for touch up), less costly than using topcoats and shortens construction time. In mild environments, the life expectancy is 25+ years. Disadvantages are: requires a skilled applicator, prone to dry overspray, mudcracks, some that the concerns that the gray-green color may not be aesthetically pleasing.

D.1.2.1.5 Zinc-Rich Primer with Topcoats (711.6, 711.20 and 711.22)

Zinc-rich primer with topcoats is an all purpose long-life system that may be used on any properly blast-cleaned structure. Advantages are: galvanic corrosion protection, should perform for at least 25 years in harsh environments, choice of topcoat color, aesthetically pleasing and the topcoats protect the primer therefore providing a longer life. Disadvantages are: high initial cost, additional construction time due to multiple coats of paint and structural repairs may not match in color due to color change resulting from weathering of the topcoat.

Complete shop painting (primer and topcoats applied in fabrication shop) should be considered for structures in industrial areas. This approach keeps the primer from becoming contaminated in the field prior to topcoating. In addition, all the painting will be performed on the ground; application and inspection should be more efficient in the fabrication shop. In high traffic areas, such as Interstate overpass bridges, complete shop painting reduces the amount of time required for lane closures due to painting. Disadvantages are: construction damage may require extensive costly repairs and the steel fabrication industry generally does not prefer to do complete shop painting.

D.1.2.2 Items for Consideration by the Designer

- Traffic control:
  How will the field coating operations affect traffic control?

- Public awareness:
  Is the structure located in an area where color is important to the citizens of the area?

- Structure location and design:
  If the structure is located in an industrial area, is the proposed design of the structure compatible with ease of painting? Open box members, seams, inaccessible areas etc. should be avoided.

- Slip critical surfaces:
  The slip coefficient of the coating must be taken into account in designing the connections. The cost factor of additional bolt holes for "slippery coatings" includes the cost of drilling additional holes, the cost of the fasteners and the time for installation.

- Demolition and toxic metals:
  Will the existing bridge be demolished? Does the existing bridge contain lead or other toxic metals? If the answers are yes, the plans should contain notes informing the Contractor.

- Steel Box beams:
  If using box beams, the inside of the boxes shall be coated with an inorganic zinc-rich primer without topcoats. Cover or screen box openings to keep birds and their pollution out of the inside of the boxes.

- Jointless structures:
  Jointless structures are coating friendly over the life of the structure. Generally, the area in the vicinity of joints is the first area to exhibit corrosion due to joints leaking onto the structure.

- Uncoated weathering steel:
  When using uncoated weathering steel at bridge joints, the steel within a distance of 1½ times the girder depth should be painted. Road salts (chlorides) can attack weathering steel. Will the fascia girders be painted? If fascia girders are painted, what color? Do concrete piers need to be protected from staining and chlorides?

- Environmental regulations:
  Is the bridge located in an area of the state that has restrictions on the Volatile Organic Content (VOC) of the coating? If a structure is being demolished, how will the existing coating affect the workers and the environment? For example, using a cutting torch on lead based paint requires the worker to be protected from the resulting fumes.

- Containment:
  Some form of containment will most often be required for field painting and touch up. See SSPC's *Guide for Containing Debris Generated during Paint Removal Operations* (Guide 6), SSPC's *Guide for the Disposal of Lead-Contaminated Surface Preparation Debris* (Guide 7) and MP688.03.20. Three parameters must be included in the plans: class of containment, method of assessment and method of assessment of quantity of emissions (see Section D.1.3.3.3).

D.1.3 Coatings for Existing Structures

D.1.3.1 Strategy

- Spot or localized repair and overcoating:
  This strategy involves the spot preparation of localized areas or zones that are exhibiting deterioration (eg., areas under leaking expansion dams), followed by the spot application of a primer to the repaired area and one or more finish coats to the repaired zone or to the entire structure. This approach has proven to be a cost effective method for extending the life of paint systems provided the amount of surface preparation required is not extensive, and the coatings

which are allowed to remain can satisfactorily withstand the curing stresses and weight of applying additional layers of paint. With this strategy, it is important that coatings compatible with the existing system be used. Risks associated with this strategy include: the potential for cohesive disbanding within the old paint system, adhesion failure between the new and the old coating layers or total failure to the base metal substrate. Additionally, there is potential for lifting and corrosion at the typically more difficult to coat areas such as edges, connections, inside angles, welds or even fractured edges of the old system at tie-in points. This strategy allows lead or other hazardous toxic metals in the existing coatings, if present, to remain for future remediation. This strategy may produce an aesthetically unpleasing patchwork appearance.

- Total coating removal and replacement:
  This strategy is initially the most expensive approach. However, the initial cost spread out over the expected service life makes this strategy less expensive in the long term. Costs may increase due to requirements for compliance with environmental and worker protection issues, the volume of waste to be handled and disposed of and the possible disruption of traffic services for extended periods of time. The risk of contaminating surrounding property can be significant. The major advantages of this strategy are the complete removal and mitigation of hazardous toxic metals, if present, and wide latitude in the selection of high performance repainting materials, which have been proven to provide the best long-term performance characteristics. In light of the fact that an entirely new coating system is being applied, the need for maintenance painting should not be necessary for several years. This is an excellent strategy if the elimination of hazardous toxic metal-containing coatings is required and budgetary restrictions are minimal or if the existing coating were so deteriorated that spot or localized repairs would essentially result in complete removal.

- Demolition and replacement of the structure:
  For older or smaller structures, it has often been found to be more cost effective to replace the structure rather than removing and replacing the coating, particularly if lead paint is present. In the case of smaller bridges, this can be a viable option when the bridge deck also requires replacement. The principle advantage is that costs for the construction of field containment, worker and environmental protection and hazardous waste disposal are instead applied to a tangible asset (the new bridge), which meets updated design technology and requirements. If it is decided to demolish the structure, the demolition plans should note that the existing coating on the structure contains lead or other toxic metals.

- Coating assessment:
  Prior to the decision on which strategy is appropriate for use on a structure, certain information concerning the existing coating must be determined by field inspection and testing.

  - Visual inspection:
    Rust and coating failures typically appear in a few characteristic places. Carefully examine edges and corners of structural members. Paint is generally thinner at edges and corners. Corrosion often starts at these locations and then undercuts the adjacent intact paint as it spreads away. Inside square corners many times receive an extra thick layer of paint due to multiple coating application passes made over the surface in an effort to coat all angles of the structure. These thicker layers of paint may be prone to cracking, thus exposing the steel to the environment. Carefully examine all areas that may contain deicing salts or retain moisture. Pay particular attention to areas under scuppers, beneath downspouts, inside gusset connections and horizontal surfaces beneath the edges of bridge decks and expansion dams, where deicing salt runoff and debris typically collects. Inspect bolts and rivets, rust detected in these areas may indicate corrosion along the entire length of the bolt or rivet, which may indicate reduced structural integrity. Examine splash zones and surfaces directly exposed to wind, rain and moisture condensation.

  - Corrosion:
    The degree of corrosion or coating deterioration (peeling, cracking, lifting, etc.) is important in deciding which painting strategy to use. There are a variety of industry standard procedures, which incorporate photographic standards in order to evaluate and categorize the degree and extent of corrosion on steel surfaces. One method entails a visual evaluation of painted surfaces in accordance with ASTM 610/SSPC-Vis 2, *Standard Method for Evaluating Degree of Rusting on Painted Steel Surfaces*. This pictorial standard provides an excellent reference for evaluating and quantifying the degree of rusting on painted steel surfaces.

  - Dry film thickness:
    As the number of coats of paint on a structure and their total thickness increases and the associated stresses and weight of the paint film increase; the risk of future detachment by maintenance painting increases. Measure the paint film thickness in accordance with established industry standards using the equipment manufacturer's instructions for instrument operation. SSPC-PA2, *Measurement of Dry Film Thickness with Magnetic Gages*, provides a test method for measuring total coating thickness on painted steel surfaces. Measure the total thickness of the paint film at each adhesion test location and at representative locations across the structure. Take measurements on girder surfaces including web, top flange and both top and bottom surfaces of the bottom flange. Measurements should be

taken on a representative area of each type of structural member present on the bridge and for each different exposure environment (splash zones, areas directly exposed to weathering, areas protected from weathering). Measurements should also be made on areas where the coating is visually different. Record the number of measurements conducted on each component, the overall range and the average of all readings obtained.

- Coating adhesion:
  At some point, the application of additional coating material to an otherwise adherent paint may impart sufficient stress and weight to cause the existing coating to disbond at its weakest point. Adhesion test results help to provide a means for making broad judgments about potential risks of applying additional layers of paint. Locations selected for adhesion tests should represent the thinnest to the thickest areas of the existing coatings. Test area frequency depends upon the size of the structure, the similarity in condition of the coating throughout the structure, coating thickness variations and other factors relating to coating service environments. Coating conditions may vary in spans over water, as opposed to spans over land. The amount of direct sunlight incident to the bridge steel can have varying effects on the condition of the existing coating. Thus, more testing is required if different environments exist. The ultimate factor in reducing test frequency occurs when consistency of results is obtained.

  Adhesion testing may be performed in accordance with ASTM D3359, *Standard Test Methods for Measuring Adhesion by Tape Test*, Method A and B. Methods A and B differ in the type of scribe made in the existing coating, the thickness of the existing coating determines which of the methods to use. Both methods assess the amount of coating removal on a scale of 0 to 5, with 5 being the best adhesion. Method A, the X-Cut Method, is more commonly used for the thicker (greater than 5 mils) coating films. Method B is usually reserved for laboratory testing of coating films less than 5 mils in thickness.

- Substrate condition:
  Underfilm corrosion or an intact layer of mill scale on a surface, if inactive, may not necessitate the removal of the existing coating. Conversely, if the mill scale, which can be thermodynamically unstable, is beginning to flake and detach from the steel substrate, or if active underfilm corrosion is occurring, such conditions can influence the maintenance painting decision. At each adhesion test site, remove approximately 1 square inch of the coating from the substrate. This can be accomplished by scraping with a sharp knife and wiping with a strong solvent. Care must be taken to avoid damaging the substrate when removing the paint film so as to allow for accurate evaluations of underfilm conditions.

Examine the surface visually for the presence of mill scale and/or corrosion. Viewing under magnification can assist the assessment. A 5% solution of copper sulfate and tap water can aid in the determination of the presence or absence of mill scale. The solution, when applied to the area, plates out a copper color on the bare steel. Mill scale remains a bluish-black color. Document the presence or absence of mill scale and corrosion, describe its condition and identify the locations of tests.

- Existing coating:
  The bridge file (available in the District or in Operations Division) should be reviewed to ascertain the type of paint previously applied to the structure. The bridge file should contain a coating history of the structure. If the generic type of the existing coating is unknown, it must be determined prior to specifying repairs to assure that compatible repainting materials are used. The finish and underlying coatings should be sampled separately for laboratory analysis. Samples of coatings may be removed by scraping with a sharp knife or with a chisel. The frequency of the sample sites depend on the conditions found on the structure. If the same number of coats are found throughout and the coating does not appear different, fewer samples are needed. All areas where coatings were removed should be immediately repaired by applying a coat of paint.

  Assessing and quantifying the presence of lead and other toxic metals may be determined from coating samples. Samples should comprise of all coats or layers of paint and be frequent enough to represent all coatings on the structure. Atomic Absorption Spectroscopy is a suitable laboratory method to determine the concentration of hazardous metals. Additionally, simple field test methods for lead detection exist. One such method uses LeadCheck® swabs in which a reactive chemical turns a different color, usually reddish or pinkish, in the presence of lead at concentrations higher than 0.5% (5000 PPM). The limitation of this test is that it is qualitative. Only the presence of lead is detected, not the concentration, and lead levels below 5000 PPM may not be detected. OSHA 29 CFR 1926.62, *Lead Exposure in Construction* is triggered when airborne concentrations of lead exceed the action level (30 micrograms per cubic meter) as an 8 hour time weighted average (TWA). This can occur at lead levels considerably less than 5000 PPM. Depending on the removal method and ventilation employed, this method is useful only for a quick field determination of the presence or absence of lead containing coatings. The actual concentration of lead and other hazardous metals must be quantified by appropriate methods prior to beginning contract work.

D.1.3.2 Interpretation of Coating Condition Data

Four criteria must be reviewed and interpreted: corrosion, adhesion, film thickness, and substrate condition. The following table gives general guidelines for decision-making.

Criteria	Test Method	Condition 1 Repair Not Required at Present	Condition 2 Repair Needed Soon	Condition 3 Engineering Decision	Condition 4 Total Removal of Coating
Corrosion/Coating Deterioration	ASTM D610	Less than 3%	3 - 10%	10 - 20%	Greater than 20%
Adhesion	ASTM D3359	Greater than 2A or 2B	Greater than 3A or 3B	Less than 3A or 3B	0A or 0B
Film Thickness	SSPC PA2	Less than 20 mils	Less than 20 mils	20 - 30 mils	Greater than 30 mils

These guidelines should not be seen as absolute for making painting decisions because many other factors, such as section loss, structural integrity, available funding and public safety must be included in the decision.

It is apparent that Condition 3 has the most risk for spot repair/overcoating. Coating test patches are a good engineering method to assist in making the correct decision. Placing test patches on a structure is a relatively simple and inexpensive process. ASTM D5064-01, *Standard Practice for Conducting a Patch Test to Assess Coating Compatibility*, should be used. A few key items in the test patch process are:

- Selection of coating material:
  A good start is to contact a coating manufacturer's representative for their recommendations. At least three different coating materials should be selected.

- Selecting test patch locations:
  Ultraviolet light exposure, airborne contamination (including truck exhaust), roadway splash zones and deicing salt retention areas can all have different micro environments that may dictate coating conditions and where representative test patches are applied.

- Surface preparation:
  Should be the same as for the application of the repair coating.

- Patch application:
  If possible, the coatings should be applied by the same method that is to be used during the project. Wet film thickness should be monitored during application. In the application of multi-coats, a small portion of each coat should be left exposed so that each individual layer can be evaluated. Six months is the minimum exposure time recommended. Allowing the test patches to weather over the winter provides for several freeze-thaw cycles, which are beneficial to the evaluation.

- Patch evaluation:
  Any sign of peeling, cracking or disbonding indicates the material may not be adequate. Adhesion should be tested around the total patch area. The adhesion should remain in the 3-5A (fair-good) range when evaluated in accordance with ASTM D3359, *Standard Test Methods for Measuring Adhesion by Tape Test*. The new coating must be well adhered to the existing coating and the original layers must have no diminished adhesion qualities as a result of the new coating application. The patch should be periodically evaluated for as long as practical. The results of the patch test should show:
  - If the structure is a candidate for spot repair/overcoating.
  - Which of the test materials is the most appropriate for recoating the structure.
  - The possibility of using a hybrid approach to recoating the structure (i.e., complete removal in some areas and overcoating in others).

D.1.3.3 Guidance Document 6: Guide for Containing Debris Generated During Paint Removal Operations

In order to assist industry in a better understanding of containment, the SSPC published *Guide for Containing Debris Generated during Paint Removal Operations,* (Guide 6). Guide 6 establishes classes of containment for methods of removal in addition to abrasive blast cleaning. These additional classes include hand and power tool cleaning, chemical stripping and wet methods of removal. Guide 6 describes the following: methods of paint removal, containment system classes and methods of assessing the quantity of emissions.

D.1.3.3.1 Removal of Coatings Containing Lead and Other Toxic Metals

A designer faces various problems when the existing coating on a structure contains lead or other toxic metals. These problems can be placed in two categories: removal and containment.

- Methods of paint removal:
  The removal of bridge coatings containing lead and other toxic metals can be performed in an environmentally conscious and worker safe manner. The technology of paint removal and containment methods has advanced substantially in the past few years. The Steel Structures Painting Council has two major publications that deal with lead removal; they are *Industrial Lead Paint Removal Handbook*, Volume I, and *Industrial Lead Paint Removal Handbook*, Volume II (Project Design).

  For total removal of bridge coatings, abrasive blast cleaning remains the method of choice for both specifiers and painting contractors. It is the most productive of the paint removal methods and provides the highest quality of

preparation to enhance the long-term paint performance. The most common methods of abrasive blast cleaning are listed below:

- Blast cleaning with expendable abrasives:
  Disadvantages include, a high level of dust, requirement for elaborate containment and ventilation systems and the volume of waste debris is high. Large amounts of debris can significantly increase the cost of waste handling and disposal.

- Blast cleaning with recyclable abrasives:
  The abrasives are recycled on site using specialized equipment. Disadvantages include the high cost of equipment, equipment breakdown and the resulting lost time. Dust that escapes the containment is typically composed of high levels of steel fines, which can rust and may stain new paint films giving the appearance of premature coating failure on those freshly painted areas.

- Wet methods of blast cleaning:
  In order to reduce the emissions at the point of generation, water alone or water combined with an abrasive may be used. Methods include high pressure water jetting (up to 25,000 PSI) and ultra high pressure water jetting (up to 40,000 PSI). The water alone is capable of removing loosely adherent coatings or for the selective removal of marginally adherent coatings. The use of water for cleaning leads to efficient removal of chloride from rusted areas. Wet methods are less productive than dry methods, but containment requirements due to no airborne dust, can be reduced. Rust inhibitors are often used to prevent flash rusting prior to coating application. Rust inhibitors can cause problems with paint adhesion; the rust inhibitor must be compatible with the coating system. Disadvantages include the large amount of water that is to be contained, captured and filtered to remove paint chips, etc.

- Vacuum blast cleaning:
  The blasting nozzle is fitted with a source of vacuum to simultaneously clean and collect the abrasive. Disadvantages are a low rate of production, equipment must be relatively close to the work area, difficult to maintain a proper vacuum on irregularly shaped surfaces and special fittings/attachments are often needed.

Whichever method of cleaning is used, the final condition of the steel should provide a surface cleanliness compatible with the prime coating to be used on the project. On existing structures when abrasive blasting is required, the two surface preparation standards usually specified are SSPC-SP6 (NACE #3), Commercial Blast Cleaning, or SSPC-SP10 (NACE #2), Near-White Blast Cleaning. The difference between the two standards is the amount of staining allowed per unit of area. SSPC-SP10 is the more stringent of the two standards. On projects where blast cleaning is not required or not

possible, SSPC surface preparation standards such as, SSPC-SP3 Power Tool Cleaning, or SSPC-SP11 Power Tool Cleaning to bare metal can be specified.

In addition to the surface preparation standard, surface profile (roughness of the surface) needs to be specified. The allowable surface profile depth is usually dependent upon the thickness of the coating to be applied. If control of the surface profile is deemed to be significant to coating performance, it should be addressed in the specifications. Surface profile is discussed in SSPC-SP-COM. Designers developing coating specifications should familiarize themselves with SSPC, Steel Structures Painting Manual, *Systems and Specifications*, Volume II.

- Containment:
  When using dry abrasive blast cleaning, sophisticated containment systems are required. It is common for regulators and the public to expect "dust free" operations. While no operation is completely free of any emissions at all times, containment systems being designed and used today are capable of controlling the emissions to the extent that they are not harmful to the environment or the public. The result of the tight containment has been to create an extremely hazardous environment for the workers inside. In order to reduce the toxicity of those exposed inside and to better control the escape of dust, ventilation systems are used. In May 1993, OSHA published *Lead Exposure in Construction* (29 CFR 1926.62). This standard requires that feasible engineering controls be used to reduce worker exposures to lead and other toxic metals. When working in containment, "engineering controls" necessitate the use of substantial dust collection systems to achieve sufficient controlled air-flow.

D.1.3.3.2 Containment System Classes

Containment classification systems vary in the degree to which the containment design can be effective in controlling emissions into the environment. The degree of emission control is highest in Class 1, high for Class 2, moderate for Class 3 and minimal for Class 4. Four classes of containment are available for abrasive blast cleaning, with three classes for the other methods of removal. Selection of a containment system with greater emission control is recommended when the public is nearby or the project is close to environmentally sensitive areas. Each Class, 1 through 4, is also designated by a letter which signifies the type of removal method being used. The letters are A for abrasive blast cleaning, W for wet methods, C for chemical stripping and P for power tool or hand cleaning. For example, Class 1A designates Class 1 using abrasive blast cleaning methods. Each Class is defined in Guide 6 with regard to the physical characteristics of the containment, such as type of joint, walls, and the required ventilation.

D.1.3.3.3 Methods of Assessing the Quantity of Emissions

There are six methods of assessment; they are the following:

- Method A (visible emissions):
  - General surveillance (assessments made without regard to the opacity of emission).
    - Level 0 emissions – no visible emissions.
    - Level 1 emissions – random emissions of no more than 1% of the work day.
    - Level 2 emissions – random emissions of no more than 5% of the work day.
    - Level 3 Emissions – random emissions of no more than 10% of the work day.
    - Level 4 emissions – emissions are unrestricted and may occur at any time.

  Opacity scale (assessment of both the length of time an emission is observed, together with the opacity of the emission on a scale from 0 to 100%).

  The WVDOH has, on most projects in the past specified Level 2 Emissions. The 5% is equivalent to 24 minutes in an 8-hour workday. The opacity scale measurement must be made by trained, certified observers.

- Method B (ambient air monitoring for PM-10):
  High volume air samplers equipped with PM-10 heads are used to assess the total amount of particulate matter, 10 microns or less in size, which escapes the containment. The number of monitors to be used is based upon wind direction and proximity to homes, schools, playgrounds, etc. Monitoring should be conducted for a few days prior to the beginning of work in order to establish background levels.

- Method C (occupational monitoring of area emissions for lead):
  This method uses personal monitors outside the area or equipment that may potentially emit lead.

- Method D (EPA ambient air monitors for toxic metals):
  High volume air samplers are equipped for the collection of total suspended particulate. Same site selection criteria as Method B.

- Method E (soil analysis for toxic metals):
  A pre-job and post-job soil analysis for toxic metals, such as lead, may be useful for determining if adequate ground protection was employed.

- Method F (water and sediment analysis):
  A pre-job and post-job sediment analysis for toxic metals may be useful in determining if adequate water protection was employed. Sampling of water in fast moving streams may or may not be useful. However, for sedentary bodies of water or if drinking water intakes are located nearby, both pre- and post-job water sampling and analysis may be beneficial.

D.1.3.4 General Comments

- The Designer should specify the class of containment required and the environment monitoring assessment criteria that will be used to verify the containment suitability. The specified containment must be maintained in accordance with the approved design throughout the project.

- The Designer must consider the effect of wind loads on the bridge with the containment in place and provide the minimum wind speed at which the containment must be dropped. The containment structure must be capable of supporting the weight of workers, equipment and abrasive material.

- The specification should identify the methods(s) of assessment, the frequency and duration of the test, the location of the monitor(s) and the acceptance criteria.

- Surface preparation material (waste material from cleaning) is not classified as hazardous until tested, although it must be handled as hazardous material until shown to be non-hazardous.

- In addition to Guide 6, the following documents are of value to the Design Engineer:
  - Guide 7: SSPC's *Guide for the Disposal of Lead-Contaminated Surface Preparation Debris*.
  - SSPC 95-06: *Project Design, Industrial Lead Paint Removal Handbook*, Volume II.
  - MP 688.03.20: *Guide for Developing the Contractor's Containment/ Disposal Control Plan for Spent Material Prior to Painting Existing Steel Structures*.
  - MP 688.03.21: *Procedure for Sampling "Spent Material" During Removal or Cleaning of Existing Steel Structures Prior to Repainting*.
  - MP 688.03.22: *Procedure for Testing "Spent Material" Recovered During Paint Removal or Cleaning of Existing Steel Structures*.
  - MP 688.03.23: *Evaluation and Approval for Laboratory Testing of Solid Waste*.
  - MP 688.02.20: *Guide for Contractor's and Fabricator's Quality Control Plan for Painting Structural Steel*.

- On existing structures, the WVDOH has been requiring two water washing phases.
  - Phase 1, using plain water and low-pressure (3,000 – 4,500 PSI), consists of completely washing the entire bridge deck, expansion joints, sidewalls and drains.
  - Phase 2, wash the structural steel at low pressure with a solution of a commercial brand of soluble salt remover. After the Phase 2 washing, the surface is tested to ascertain chloride concentration. The maximum level of chloride contamination allowed has been 5-micrograms/square centimeter. The WVDOH has been specifying Chlor*Rid® or equal as the soluble salt remover and Chlor*Test™ as the test method.

- The wash water from the water cleaning phases is sometimes filtered using a 40 or finer mesh material to catch particles of paint and debris.

- In high traffic areas, overpass bridges can be painted at night using rapid mobilization techniques. This technique uses portable truck-mounted containment structures, which are set up and taken down each work night. Using this type of containment with fast curing coatings allows dusk to dawn work with the potential for coating one or two lanes per shift.

D.2 CONCRETE COATINGS

An important measure used to extend the life of concrete elements, in general, and concrete decks, in particular, is the application of a protective waterproofing sealer. For concrete decks, the protective sealer is typically placed on the deck fascias, an area which is extremely susceptible to deterioration.

In general, protective sealers are available in a variety of forms; those accepted by the WVDOH are Linseed Oil and Epoxy Resin. See sections 601.13, 707.11, and 707.12 of the Standard Specifications.

See Appendix A.1 (Protection of Concrete Substructure) for concrete substructure coatings.

APPENDIX E - REFERENCES

AASHTO American Association of State Highway and Transportation Officials
444 North Capitol Street N.W., Suite 249
Washington, DC 20001
(202) 624-5800
www.aashto.org
http://bridges.transportation.org

AGA American Galvanizers Association
6881 South Holly Circle
Suite 108
Centennial, CO 80112
(800) 468-7732
www.galvanizeit.org

AWS American Welding Society
550 N. W. LeJeune Road
Miami, FL 33126
(800) 443-9353
www.aws.org

CRSI Concrete Reinforcing Steel Institute
CRSI Headquarters
933 North Plum Grove Road
Schaumberg, IL 60173-4758
(847) 517-1200
www.crsi.org

CSX CSX Transportation, Inc.
500 Water Street
Jacksonville, FL 32202
(904) 359-3100
www.csxt.com

DEP West Virginia Department of Environmental Protection
1356 Hansford Street
Charleston, WV 25301
(304) 558-5929
www.dep.state.wv.us

DNR West Virginia Division of Natural Resources
State Capitol Complex
Building 3, Room 669
1900 Kanawha Boulevard, East
Charleston, WV 25305-0060
(304) 558-2754
www.dnr.state.wv.us

FEMA Federal Emergency Management Agency
West Virginia Office of Emergency Services
Building 1, Room EB-80
1900 Kanawha Boulevard, East
Charleston, WV 25305-0360
(304) 558-5380
(304) 344-4538 Fax
www.fema.gov

FHWA Federal Highway Administration
West Virginia Division
700 Washington Street, East
Charleston, WV 25301
(304) 347-5928
www.fhwa.dot.gov/wvdiv/wv.htm

NACE NACE International
(National Association of Corrosion Engineers)
1440 South Creek Drive
Houston, TX 77084-4906
(218) 228-6200
www.nace.org

NS Norfolk Southern Corporation
Three Commercial Place
Norfolk, VA 23510-9227
(757) 629-2600
www.nscorp.com

NSBA National Steel Bridge Alliance
One East Wacker Drive
Suite 3100
Chicago, IL 60601-2001
(312) 670-7010
www.aisc.org/content/NavigationMenu/About_AISC/NSBA/NSBA.htm

SHPO State Historic Preservation Officer
West Virginia Division of Culture and History
The Cultural Center
Capitol Complex
1900 Kanawha Boulevard, East
Charleston, WV 25305-0300
(304) 558-0220
www.wvculture.org/shpo/index.html

SPC Society for Protective Coatings
(Formerly Steel Structures Painting Council)
40 24th Street
6th Floor
Pittsburgh, PA 15222-4656
(877) 281-SSPC (7772)
www.sspc.org

SRA West Virginia Department of Transportation
State Rail Authority
120 Water Plant Drive
Moorefield, WV 26836
(304) 538-2305
www.wvdot.com/4_railways/4c_staterail.htm

USACE US Army, Corps of Engineers
Pittsburgh District
2032 William S. Moorehead Federal Building
1000 Liberty Avenue
Pittsburgh, PA 15222-4186
(412) 395-7500
www.lrp.usace.army.mil

US Army, Corps of Engineers
Huntington District
502 Eighth Street
Huntington, WV 25701-2070
(304) 529-5395
www.lrh.usace.army.mil

US Army, Corps of Engineers
Baltimore District
P. O. Box 1715
Baltimore, MD 21203-1715
(410) 962-7608
www.nab.usace.army.mil

USCG Eighth Coast Guard District
Bridge Branch
1222 Spruce Street
St. Louis, MO 63103-2398
(314) 539-3900
www.uscg.mil/d8/index.htm

WVDOT West Virginia Department of Transportation
Division of Highways
Building 5
1900 Kanawha Boulevard, East
Charleston, WV 25305-0430
(304) 558-3505
www.wvdot.com

Engineering Publications and Manuals
www.wvdot.com/engineering/TOC_engineering.htm

GLOSSARY

A

AASHTO
American Association of State Highway and Transportation Officials

ABRASIVE
(1) A material used for wearing away a surface by rubbing. (2) A fine, granulated material used for blast cleaning. Abrasive particles of controlled mesh sizes are propelled by compressed air, water, or centrifugal force to clean and roughen a surface. Blast cleaning abrasives often are simply referred to as metallic or non-metallic and as shot- or grit-like. See also METALLIC ABRASIVE, NON-METALLIC ABRASIVE, SHOT ABRASIVE.

ABRASIVE BLAST CLEANING
A surface preparation method that uses an abrasive propelled by air pressure, centrifugal force, or water pressure to clean and usually to profile a surface. Stand-off distance, angle of attack, and dwell time are the three most important variables under the control of an operator that can affect the quality and effectiveness of the blast-cleaning.

ABUTMENT
An end support for a bridge superstructure.

ACCELERATED WEATHERING
A set of conditions intended to simulate those encountered in practice, but which are intensified artificially in an attempt to accelerate the destructive action of natural outdoor weathering on coating films. The tests involve exposure to artificially produced components of natural weather (e.g., light, heat cold, water vapor, rain, etc.), which are arranged and repeated in a specific cycle. There is no universally accepted accelerated weathering test, and different investigators have found widely different cycles to be useful.

ACTION LEVEL
A term used by OSHA and NIOSH for the level of exposure that triggers medical surveillance and other controls at some level below the Permissible Exposure Limit (PEL). For example, according to 29 CFR 1926.62, the action level for painters and other construction workers exposed to lead is 30 micrograms per cubic meter averaged over 8 hours. The PEL is 50 micrograms per cubic meter.

ADHESION
The degree of attraction between a coating and a substrate or between two coats of paint that are held together by chemical or mechanical forces or both. Adhesion often is called the "bonding strength" of a coating. Adhesion should not be confused with "cohesion," which is the force holding a single coating layer together.

ADHESION TEST, CROSSCUT (TAPE)
A method for testing adhesion of a coating to a metallic substrate using pressure-sensitive tape is applied over an X-cut or crosshatch cuts in the film and removed. Adhesion is assessed by the amount of coating that also is removed in the process. This standard test is outlined in ASTM D-3359.

ADHESION TEST, TENSILE (PULL-OFF)
A method for testing adhesion of a coating using a pull-off adhesion tester to determine the most perpendicular force that an area of coating can withstand before detaching from the surface or whether it can remain intact at a particular force. This standard test method is outlined ASTM D-4541.

AIR ABRASIVE BLAST CLEANING
A surface preparation method in which compressed air is used to propel abrasive particles against a surface to be cleaned. "Open blast cleaning," indicates that a localized containment does not surround the blast stream. "Closed blast cleaning", means that a localized containment does surround the blast stream.

AIRLESS SPRAYING
A coating application method that uses hydraulic pressure instead of air to atomize paint by forcing it through a spray nozzle with a small orifice at a pressure of 2,000 to 3,000 psi. The spray pattern and flow of paint are controlled by the size and shape of the orifice. The size of the orifice must be matched with the viscosity of the paint and the size of the material pump.

AISC
American Institute of Steel Construction

APPLICATION
Any process by which a coating is applied to a surface. Traditional application techniques include brushing, spraying, dipping, rolling, and spreading with a pad or mitt. Nontraditional methods include electrodeposition, fusion coating, and extrusion.

APPROACH SLAB
A reinforced concrete slab used at the approaches of a bridge to prevent settlement of the approach pavement.

ASTM
American Society for Testing Materials

AUXILIARY STIFFENERS
Partial depth bearing stiffeners that reinforce the girder web over the bearing device.

B

BACKGROUND LEVEL
The amount of pollutants present in the ambient air, water, and soil at a work site before the start of a job that has the potential to pollute the environment.

BARRIER COAT
(1) A coating or coating system that protects an underlying substrate by minimizing or eliminating the penetration of moisture or vapors. (2) A coating used to separate a layer of paint from a surface to prevent chemical or physical interaction.

BATCH
The total quantity of paint or other material that is produced in a single processing, mixing, and/or filling operation.

BEAM
A structural member, generally a rolled shape, whose primary function is to resist loads in flexure and shear.

BEARING
A device that transmits vertical loads from the superstructure to the substructure.

BEARING STIFFENER
Stiffeners used to resist bearing reactions at support locations.

BERM
A slightly sloping region in front of the abutment.

BINDER
Nonvolatile portion of the liquid vehicle of a coating. When paint dries, the binder becomes part of the solid film. It binds the pigment particles together and cements the paint film to the material to which it is applied. The amount of binder needed to completely wet a pigment is determined primarily by the particle size, shape, chemical composition, and density of the pigment and the particle size, degree of polymerization, and wetting properties of the binder. See also VEHICLE.

BLAST CLEANING
Cleaning a surface by blasting it with abrasive, with water, or with a water-abrasive mixture propelled by compressed air, water pressure, or centrifugal force. Blast cleaning also is used to roughen a surface, giving it a profile or anchor pattern for coating adhesion.

BLAST CLEANING ABRASIVE
See ABRASIVE, BLAST CLEANING.

BLASTING ENCLOSURE
An enclosure used to contain the blasting operation. It usually is equipped with a vacuum to remove the spent abrasive, dust, and paint simultaneously with the blasting operation.

BRIDGE DESIGNER
The lead person in responsible charge of developing the Bridge Plans.

BRIDGE PROJECT MANAGER
The WVDOH representative who has approving authority over the Bridge Plans.

BRUSH-OFF BLAST CLEANING
Blast cleaning standard with the lowest quality requirements.

C

CANTILEVER WALLS
Walls comprised of a concrete stem and a base footing, which form an inverted "T". The wall is fully reinforced to resist applied loads.

CAST-IN-PLACE CONCRETE
Concrete that is poured in its final location.

CATEGORY SIX PROGRAM
State funded program consisting of bridges primarily less than 100 FT in length.

CENTRIFUGAL BLAST CLEANING
A blast cleaning process (usually enclosed) that uses rotating, motor-driven, bladed wheels to hurl abrasive (usually steel shot, steel grit, or a shot/grit mixture) at the surface being cleaned. The abrasive material is fed to the center of the wheel and then onto blades that radiate from the hub. Centrifugal force produced by the turning wheel accelerates the abrasive to the ends of the blades from which it is thrown against the surface.

CHEMICALLY CURING COATING
A coating in which a cross-linked polymeric film is developed from a chemical reaction between two components, often referred to as the base and curing agent. For example, an epoxy base is reacted with an amine curing agent.

CHEMICAL STRIPPING
Use of paint removers or chemical strippers to soften existing coatings for removal by scraping and/or flushing.

CJP (Complete Joint Penetration Groove Weld)
A groove weld which has been made from both sides or from one side on a backing having complete penetration and fusion of weld and base metal throughout the depth of the joint.

CLOMR (Conditional Letter of Map Revision)
A *Conditional Letter of Map Revision (CLOMR)* is FEMA's comment on a proposed project that would affect the hydrologic and/or hydraulic characteristics of a flooding source and thus result in the modification of the existing regulatory floodway or effective Base Flood Elevations. There is no appeal period. The letter becomes effective on the date sent. This letter does not revise an effective National Flood Insurance Program map; it indicates whether the project, if built as proposed, would or would not be removed from the Special Flood Hazard Area by FEMA if later submitted as a request for a Letter of Map Revision.

CLOSED ABRASIVE BLAST CLEANING
Compressed air or centrifugal blast cleaning done within a localized containment or enclosure that surrounds the abrasive stream. The enclosure is held to the surface to create a seal, and is equipped with a vacuum to remove spent abrasive and debris simultaneously with the blasting operation. When compressed air is used to propel the abrasive, the technique often is called “vacuum blasting”. When wheels are used to propel the abrasive, the technique often is called “wheel blasting”.

COATING SYSTEM
A protective film consisting of one or more coats, applied in a predetermined order by prescribed methods. A coating system description in a specification may include surface preparation and quality control requirements.

COAT OF PAINT
A layer of wet paint that is allowed to dry and harden before use or before application of a subsequent layer.

COFFERDAM
A watertight enclosure used for foundation construction where the founding elevation is below water level.

COHESION
The propensity of a substance to adhere to itself. The force holding a substance together. (Paint/Coatings Directory) The ability of a single coating layer to resist internal partitioning or fracturing.

COLORFASTNESS
The ability of a film of paint or varnish to show little change in original color after being exposed to light and weathering.

COMMERCIAL BLAST CLEANING
Moderate grade of blast cleaning. According to The Society for Protective Coatings Surface Preparation Specification No. 6 "Commercial Blast Cleaning" (SSPC-SSP 6), a commercial blast cleaned surface is free to all visible oil, grease, dirt, dust, mill scale, rust, paint, oxides, corrosion products, and other foreign matter, staining is limited to no more than 33 percent of each square inch of surface area. Commercial blast cleaning also is defined in NACE No. 3 "Commercial Blast Cleaned Surface Finish". NACE and SSPC have a joint effort underway to develop a unified consensus on blast cleaning standards.

COMPOSITE CONSTRUCTION
Action where the concrete deck and its supporting members work as one unit to resist superimposed dead loads and live loads.

CONSTRUCTION JOINT
A temporary joint used to permit sequential construction.

CONTAINMENT
A method to limit dust, debris, paint chips, paint dust, spent abrasives, and over-spray from contaminating the environment. The type, concentration, and toxicity of the contamination determine the extent of containment systems include free-hanging enclosures, partial structure enclosures, and total structure enclosures with or without negative pressure.

CONTAINMENT SYSTEM
A system that includes the containment structure (i.e., containment walls, floor, supporting structure, and entryways); ventilation system (forced or natural air input ports, and natural or mechanical exhaust); and, in some cases, dust collection equipment.

CONTRACTOR
One who undertakes responsibility for the performance of construction work, including the provision of labor and materials, in accordance with plans and specifications and under a contract specifying cost and schedule for completion of the work.

CORROSION
Deterioration of metal, concrete, or other materials by chemical or electrochemical reaction resulting from exposure to weather, oxygen, moisture, chemicals, etc.

CORROSION-INHIBITIVE PIGMENT
A pigment that, when made into a paint, has the property of reducing the rate of corrosion of the substrate to which it is applied.

COUNTERFORTS
Thin vertical slabs that are placed uniformally along the length of the stem and footing of a retaining wall. The slabs allow the wall to be designed as a beam between the slabs instead of a cantilever.

CREEP
Time-dependent deformation of concrete under sustained load.

CROSS-FRAME
A transverse truss framework connecting adjacent longitudinal flexure components.

CRSI
Concrete Reinforcing Steel Institute

D

DEBONDING
Wrapping, sheathing, or coating a prestressing strand to prevent bond between strand and surrounding concrete.

DECK
The superstructure component that distributes vehicular loads transversely to the beams and girders.

DEEP FOUNDATION
A foundation which derives its support by transferring loads to soils or rock at some depth below the structure by end bearing, adhesion or friction, or both.

DELAMINATION
The separation of a coat or coats of paint from the previous coat or from the substrate.

DEVELOPMENT LENGTH
The length required to develop the design strength of reinforcement at a critical section.

DIAPHRAGM
A transverse flexural component connecting adjacent longitudinal flexural components.

DIAPHRAGM CONNECTION PLATES
Plates that are used to connect the diaphragms and cross frames to the girders.

DOUBLE-DIP GALVANIZING
(1) Immersing half of a structure at a time into a molten zinc bath when it is too large to be immersed in one dipping. (2) Passing an article through a molten zinc bath twice in order to acquire a thicker coat of zinc.

DRILLED CAISSON
A deep foundation unit, wholly or partly embedded in the ground, constructed by placing fresh concrete in a drilled hole with or without steel reinforcement. *Drilled caissons* derive their capacities from the surrounding soil and/or from the soil or rock strata below their tips.

DRY FILM THICKNESS
Thickness of an applied coating when dry, often expressed in mils or microns.

DRY FILM THICKNESS GAGE
An instrument used to measure the dry film thickness of a coating.

DRYING TIME
Time required for an applied film of coating to reach the desired stage of cure, hardness, or non-tackiness.

DRY SPRAY
A rough, powdery, non-coherent film produced when an atomized coating partially dries before reaching the intended surface.

DRY-TO-HANDLE TIME
The drying time needed for paint or varnish to harden before handling without damaging the coating.

DRY-TO-RECOAT TIME
The drying time required between the applications of successive coats of paint or varnish.

DRY-TO-TOUCH TIME
The drying time needed for a coating of paint or varnish to harden so that it is tack-free to the touch.

E

ELASTOMER
A macromolecular material (such as rubber or a synthetic material having similar properties) that returns rapidly to approximately the initial dimensions and shape after substantial deformation by a weak stress and release of the stress.

ELASTOMERIC BEARING
A bearing fabricated with an elastomer, which permits movement of the structure it supports. Two types of Elastomeric bearings are plain elastomeric bearings and steel reinforced elastomeric bearing. See also *Plain Elastomeric Pad* and *Steel Reinforced Elastomeric Bea*ring.

EMBANKMENT
A raised structure surrounding a structural component (e.g. earth, rocks).

EMISSION
A pollutant discharged or released into the air.

EMISSION STANDARD
The maximum amount of air polluting discharge legally allowed from a single source, mobile or stationary.

ENCAPSULATION
The process of enclosing a surface, especially one containing hazardous materials, on all sides. Encapsulants include drywall, fiber-filled coatings, wood, or other materials.

EP TOXICITY TESTING (EP TOX)
A test for determining whether or not debris is hazardous based on an analysis of leachable material by either atomic absorption spectroscopy or inductively coupled plasma atomic emission spectroscopy. Procedures for conducting the test are found in Appendix II of 40 CFR 261, "Identification and Listing of Hazardous Waste." Prior to 1991, the EP Toxicity Test was used. Presently, the toxicity characteristic leaching procedure (TCLP) test is used.

EXPANSION BEARING
A bearing that permits longitudinal translation.

EXPENDABLE ABRASIVE
An abrasive that usually is discarded after one use.

F

FAST DRYING
A coating that dries in 24 hours or less under ambient conditions.

FATIGUE
The initiation and/or propagation of cracks due to repeated variation of normal stress with a tensile component.

FATIGUE LIFE
The number of repeated stress cycles that results in fatigue failure.

FATIGUE RESISTANCE
The maximum stress range that can be sustained without failure of detail for a specified number of cycles.

FEMA
Federal Emergency Management Agency

FIELD PAINTING
Coating work, including surface preparation, paint application, and inspection, at the site of construction or maintenance rather than in a shop.

FILM
A layer of coating material, either wet or dry, measured on a surface in mils or micrometers.

FILM THICKNESS
The wet or dry thickness of a coating on a substrate. Film thickness often is measured in thousandths of an inch, called mils; the metric measure is microns, which are millionths of a meter. See also DRY FILM THICKNESS.

FINISH COAT
The last coat applied in a painting operation. A finish coat is formulated specifically for environmental resistance and appearance. See also TOPCOAT.

FIRST COAT
The first layer of coating – sealer or primer – applied on a paint job.

FIXED BEARING
A bearing which prevents longitudinal translation.

FLASH RUSTING
Rusting that occurs on metal within minutes to a few hours after cleaning is complete. The speed with which flash rusting occurs may be indicative of salt contamination on the surface, high humidity, or both.

FRACTURE-CRITICAL MEMBER (FCM)
Component in tension whose failure is expected to result in the collapse of the bridge or the inability of the bridge to perform its function.

FRACTURE TOUGHNESS
A measure of the ability of a structural material or element to absorb energy without fracture. It is generally determined by the Charpy V-notch test.

G

GALVANIC PROTECTION
(1) The selective use of galvanic corrosion to protect one metal from deterioration by connecting it to another, more active (electrically negative), sacrificial metal. Both metals must be in contact with the same body of an electrolytic solution. Zinc, magnesium, or aluminum can be used as sacrificial metals for the galvanic protection of steel. (2) Protection of a metal in contact with an electrolytic solution from corrosion by the use of an impressed direct electrical current.

GALVANIZING
Applying a zinc coating to steel by dipping it in molten zinc or by depositing zinc on the steel electrolytically or mechanically.

GIRDER
A structural member, generally a fabricated section, whose primary function is to resist loads in flexure and shear.

GLOSS
The degree to which a surface reflects visual images. Gloss is a direct function of coating formulation and the amount of pigment particles in the coating. The more pigment particles there are, the lower the gloss.

GOVERNING SPECIFICATIONS
The latest edition of the *AASHTO LRFD Bridge Design Specifications*, including all interim specifications.

GRAVITY WALLS
Gravity walls are designed to resist overturning moments and horizontal sliding forces by their own weight. Two acceptable forms include un-reinforced concrete or cribbing walls (either timber or concrete).

GRIT
(1) An angular material with sharp, irregular edges obtained from slag, steel, minerals, and various other materials for use as a blast cleaning abrasive. (2) Small, hard foreign particles sometimes found in paint and coating materials.

H

HAND TOOL
Hand-held device used for surface preparation. Commonly used hand tools include abrasive pads, sandpaper, scrapers, putty knives, wire brushes, and chipping hammers.

HAND TOOL CLEANING
The use of manually operated impact, scraping, sanding, and brushing tools to remove loose paint, loose rust, and loose mill scale. Such tools include slag hammers, chipping hammers, scrapers, and wire brushes. The specification SSPC-SP 2, "Hand Tool Cleaning" is a consensus standard covering the procedures necessary for hand-tool cleaning of steel surfaces. See also SSPC-SP 2, c.

HAZARDOUS SUBSTANCE
(1) A substance that creates a hazard because it is explosive, flammable, toxic, or otherwise potentially harmful. (2) Any material designated as hazardous by the Clean Water Act, the Solid Waste Disposal Act, the Clean Air Act, or the Toxic Substances Control Act.

HAZARDOUS WASTE
A solid waste, including liquid waste, that exhibits any of the following hazardous characteristics: ignitability, corrosivity, reactivity, or toxicity, as defined in 40 CFR 261, "Identification and Listing of Hazardous Waste", or that is on a special list established by EPA. Lead paint debris is classified as hazardous due to the characteristic of toxicity if more and 5 parts per million (ppm) of lead are extracted from the debris when tested by specialized procedures (see EP Toxicity and Toxicity Characteristic Leaching Procedure). Lead is assigned the EPA Hazardous Waste Number D008. Other elements in addition to lead can cause paint debris to be classified as hazardous due to Toxicity (i.e., barium, cadmium, chromium, and mercury).

HEC-RAS (Hydrologic Engineering Center's River Analysis System)
U S Army Corps of Engineers' Hydrologic Engineering Center's River Analysis System used to develop water-surface profiles for open channel flow.

HIGH BUILD COATING
A coating with a thickness of about 5 to 30 mils (125 to 750 Microns), which is more than most paint films.

HIGH GLOSS
A smooth and almost mirror-like surface when viewed from all angles. The gloss usually is above 70 on the 60-degree gloss meter. See also GLOSS.

HIGH PERFORMANCE STEEL
Steel meeting special combinations of performance and uniformity requirements that cannot always be achieved routinely using conventional constituents and normal manufacturing practices resulting in longer structural life.

HIGH PERFORMANCE CONCRETE
Concrete meeting special combinations of performance and uniformity requirements that cannot always be achieved routinely using conventional constituents and normal mixing, placing, and curing practices resulting in longer structural life.

HIGH SOLIDS COATING
A coating with more solids than volatile content. Sixty percent solids sometimes is used as a benchmark measurement, at or beyond which a coating is said to be high solids.

HIGH-STRENGTH CONCRETE
Concrete typically with a 28-day cylinder compressive strength greater than 6,000 PSI.

HIGH VOLUME AIR MONITOR (OR SAMPLER)
A monitor used to collect samples for subsequent laboratory analysis of PM 10 (particulate matter less than 10 microns in diameter), TSP (total suspended particulate), or lead. Monitoring for PM 10 is addressed in 40 CFR 50, Appendix J, "Reference Method for the Determination of Particulate Matter as PM 10 in the Atmosphere." Monitoring for TSP is addressed in 40 CFR 50, Appendix B, "Reference Method for Determination of Suspended Particulate Matter in the Atmosphere (High-Volume Method)." Lead is analyzed from the TSP filters in accordance with 40 CFR 50, Appendix G, "Reference Method for the Determination of Lead in Suspended Particulate Matter Collected From Ambient Air."

HYBRID GIRDER
A fabricated steel girder with a web that has specified minimum yield strength lower than one or both flanges.

I

INORGANIC ZINC-RICH COATING
Anti-corrosive primer for iron and steel incorporating zinc dust pigment in an inorganic silicate vehicle. The most common types of inorganic zinc-rich coatings are: (a) post-cured, with water-borne alkali metal silicate binder; (b) self-cured, with water-borne alkali metal silicate binder; (c) and self-cured, with solvent-borne alkyl silicate binder. Inorganic zinc-rich coatings require very good surface preparation (near-white metal or white metal blast cleaning or pickling). They provide resistance to abrasion, dry heat, immersion in hydrocarbon products, solvents, fresh water, and pH-neutral aqueous solutions, and exposure in damp, humid environments, and chemical environments where the pH ranges between 5 and 9. See also ZINC-RICH COATING.

INTEGRAL ABUTMENT
Integral abutments are generally short abutments rigidly attached to the superstructure supported on a single row of piling.

INTERCOAT ADHESION
The ability of one coat of paint to adhere to the next. See ADHESION.

INTERMEDIATE COAT
One or more coats of paint between the primer coat and the finish coat.

INVENTORY RATING
The load capacity of a bridge under normal service conditions (55% of yield strength).

J, K, L

LATEX
Stable dispersion of a polymeric substance in an essentially aqueous medium. After polymerization, a latex is a solid dispersed in water and, therefore, technically not an emulsion. However, it is common in the paint industry to use the words latex and emulsion synonymously.

LATEX PAINT
A paint containing a stable aqueous dispersion of synthetic resin, produced by emulsion polymerization, as the principal constituent of the binder. Modifying resins may also be present. See also LATEX.

LEAD-CONTAINING PAINT
There is no consensus definition for lead-containing paint in industrial maintenance applications. The following definitions have been developed for related applications. (1) CONSUMER PRODUCTS – A paint or other, similar surface coating material in which the lead content (calculated as lead metal) exceeds 0.06 percent by weight of the total nonvolatile content of the paint or the weight of the dried paint film. The 0.06 percent level is equivalent to 600 ppm. (Industrial Lead Paint Removal Handbook) (2) RESIDENTIAL USE – A paint that contains at least 0.5 percent lead by weight of the dried paint film. The 0.5 percent level is equivalent to 5000 ppm.

LEAD STANDARD
The general term used to identify OSHA Standard 29 CFR 1926.62, "Interim Final Rule on Lead Exposure in Construction," which was developed for the protection of construction workers, including painters and blasters, exposed to lead. The lead standard for general industry is found in 29 CFR 1910.1025.

LEAFING
The floating and slight overlapping of aluminum and certain other pigment particles in the form of laminar flakes on the surface of coating. Leafing occurs when such pigments are mixed with a suitable vehicle and applied as a coating.

LOAD RATING
A value indicating the load capacity of a bridge.

LOMR (Letter of Map Revision)
A *Letter of Map Revision (LOMR)* is an official revision, by letter, to an effective National Flood Insurance Program map. A LOMR may change flood insurance risk zones, floodplain and/or floodway boundary delineations, planimetric features, and/or Base Flood Elevations.

LONGITUDINAL
The direction associated with the axis of a structure from abutment to abutment.

LONGITUDINAL STIFFENERS
Stiffeners that are positioned longitudinally, usually on one side, of the web of a steel girder. Longitudinal stiffeners increase the flexural and shear strength of the girder, provide for a reduction in web thickness, and limit lateral deflections.

M

MAINTENANCE COATING
A coating, other than the original one, which is designed to protect and maintain highway and railroad structures, chemical and manufacturing plants, public utilities, and other, heavy-duty industrial facilities.

MAINTENANCE PAINTING
(1) In broad terms, all painting on industrial structures conducted for protection or aesthetics. (2) Any coating work conducted subsequent to the coating work associated with construction.

MARGINALLY PREPARED SURFACE
(1) A loose generic description of a degree of surface preparation. A "marginally prepared surface" must be further qualified as to the types of surface contaminants or the types and amounts of old coatings that are not removed. For example, an aged alkyd coating, an oily, greasy, salt-contaminated, damp, or wet surface, loose, stratified, or tight rust, etc. (2) Any degree of surface preparation that is less than commercial blast cleaning (SSPC-SP 6). See also SURFACE-TOLERANT COATING.

MATERIAL SAFETY DATA SHEET (MSDS)
A printed source of information about the hazards of materials, including coatings. Federal law requires that MSDS be published and supplied by the manufacturer of a hazardous material. The law also requires that employees have ready access to MSDS in the workplace. The MSDS contains the following information: (1) product identification; (2) hazardous ingredients, their permissible exposure limits (PEL), and threshold limit value (TLV); (3) physical properties; (4) fire and explosion hazard data, such as flash point, lower and upper explosive limits, and firefighting procedures; (5) health hazard data; (6) chemical reactivity/stability data; (7) spill and leak procedures; (8) special protection information; and (9) additional special precautions.

METALLIC ABRASIVE
Blast cleaning abrasive made of metal in a wide variety of types, shapes, sizes, and degrees of hardness. Cast steel shot and grit make up most of the metallic blast cleaning abrasive used. Others include malleable iron shot and grit, hilled cast iron shot and grit, and cut-steel wire shot. See also STEEL ABRASIVE.

METALLIZING
Spraying a coating of metal onto a surface.
MIL
One thousandth of an inch (0.001 inch, 25.4 micrometers). The thickness of a coating on a surface sometimes is expressed in mils and sometimes in micrometers or microns.

MILL SCALE
The heavy oxide layer formed during hot fabrication or heat treatment of steel and other metals.

MIST COAT
A thin coat applied as a mist of spray and used as a tack coat or adhesive coat.

N

NACE INTERNATIONAL
Formerly National Association of Corrosion Engineers. NACE International is an association of corrosion engineers and related technical professionals dealing with corrosion prevention and control technology for all materials. NACE develops standards, reports, and publications, and conduct meetings, symposia, and forums. P. O. Box 218340, Houston, TX 77218-8340 (713) 492-0535.

NACE NO. 1: WHITE METAL BLAST CLEANED SURFACE FINISH
See WHITE METAL BLAST CLEANING.

NACE NO. 2: NEAR-WHITE BLAST CLEANED SURFACE FINISH
See NEAR-WHITE BLAST CLEANING.

NACE NO.3: COMMERCIAL BLAST CLEANED SURFACE FINISH
See COMMERCIAL BLAST CLEANING.

NACE NO. 4: BRUSH-OFF BLAST CLEANED SURFACE FINISH
See BRUSH-OFF BLAST CLEANING.

NAVIGABLE WATERWAY
A waterway, determined by the U. S. Coast Guard as being suitable for interstate or foreign commerce, as described in 33CFR205-25.

NCHRP
National Cooperative Highway Research Program

NEAR-WHITE BLAST CLEANING
High grade of blast cleaning. According to The Society for Protective Coatings Surface Preparation Specification No. 10, "Near-White Blast Cleaning" (SSPC-SP 10), a near-white blast cleaned surface is free of all visible oil, grease, dirt, dust, mill scale, rust, paint, oxides, corrosion products, and other foreign matter; staining is limited to no more than 5 percent of each square inch of surface area. Near-white blast cleaning also is defined in NACE No. 2, "Near-White Blast Cleaned Surface Finish." NACE and SSPC have a joint effort underway to develop a unified consensus on blast cleaning standards.

NON-METALLIC ABRASIVES
Blast cleaning abrasive made from naturally occurring, byproduct, and manufactured materials. Naturally occurring abrasives include silica sand, olivine, staurolite, flint, garnet, zirconium, novaculite, and other minerals. Byproduct abrasives include those from smelters (i.e., nickel, copper, or iron slag), and power plants (coal or boiler slag), as well as agricultural products (e.g., walnut shells, peach shells, or corncobs). Manufactured abrasives include silicon carbide, aluminum oxide, and glass beads.

NONVOLATILE CONTENT
The portion of a coating that does not evaporate during drying or curing under specified conditions, comprising the binder and, if present, the pigment. Note – The percent volatile content is obtained by subtracting the nonvolatile content from 100.

NORMAL POOL ELEVATION
The water surface elevation prevailing during the greater part of the year.

NSBA
National Steel Bridge Alliance

O

OCCUPATIONAL SAFETY AND HEALTH ACT
The Occupational Safety and Health Act of 1970 (Public Law 91-596, Dec. 29, 1970) was developed to assure safe and healthful working conditions. It authorized the Occupational Safety and Health Administration: (a) to develop and enforce regulations to protect workers from unsafe and unhealthful work environments; (b) to assist and encourage states in their efforts to ensure safe and healthful working conditions; and, (c) to provide for research, information, education, and training in the field of occupational safety and health.

OIL-BASED COATING
A paint or varnish that contains resins or oil varnish and drying oils as the basic film-forming ingredients and that converts to a solid film primarily by chemical reaction (usually oxidation).

OPERATING RATING
The load capacity of a bridge under special service conditions (75% of yield strength).

ORDINARY HIGH WATER (OHW)
The *OHW* on non-tidal rivers is the line on the shore established by the fluctuations of water and indicated by physical characteristics such as a clear, natural line impressed on the bank shelving; changes in the character of the soil; destruction of terrestrial vegetation; the presence of litter and debris; or other appropriate means that consider the characteristics of the surrounding areas.

ORGANIC ZINC-RICH COATING
Anti-corrosive primer for iron and steel incorporating zinc dust pigment in an organic vehicle. The most common types of binders for organic zinc-rich coatings are epoxy polyamide, urethane, vinyl, and chlorinated rubber. Organic zinc-rich coatings often are used for touch-up and repair of defects and damaged areas in inorganic zinc-rich coatings because the organic binder provides better adhesion than another coat of inorganic zinc-rich. Organic zinc-rich coatings are more tolerant of surface preparation deficiencies than inorganic zinc-rich coatings. They also are less likely to mud-crack, have less abrasion resistance, and have significantly lower heat resistance (depending on binder type) than inorganic zinc-rich coatings.

OVERCOATING
Applying a protective coating system over an aged coating on a structure. The system for overcoating typically consists of general cleaning of the entire surface to remove loose material, spot surface preparation of rusted or degraded areas, spot priming of repaired areas, and application of one or more full coats to the entire surface area.

OVERSPRAY
(1) Atomized paint particles that deflect from or miss the surface being sprayed. (2) Spray particles that are not wet enough to fuse when they reach the surface being sprayed. As a result, overspray may contaminate property beyond the surface being sprayed in the air is regulated by pollution control laws. It is a pollutant that meets the criteria of Section 110 of the Clean Air Act.

P

PAINT
(1) A mixture or dispersion of pigments or powders in a liquid or vehicle designed for application to a substrate in a thin layer that is converted to an opaque solid film after application. Used for protection, decoration, identification, or other functional purposes. (2) Application of a coating material.

PAINT FAILURE
(1) The condition of a paint film at the end of its useful life. (2) The premature deterioration of a coating. All paints fail eventually.

PAINTING JOB
The series of operations that includes surface preparation, pretreatment, and application of paint to a surface in the shop or in the field. It usually includes the supply of labor, material, and equipment as well as the drying and protection of the painted surface.

PAINTING SYSTEM
One or more coats of paint applied in a specific sequence to achieve a specified end result. See also COATING SYSTEM.

PENETRATING PRIMER
Coating developed to penetrate old, loose coatings, such as aged, red lead primers, and provide a good bond to subsequently applied coatings. Penetrating primers have low molecular weight and low viscosity. They are clear or lightly pigmented.

PERMIT VEHICLE
Any vehicle whose right of travel is administratively restricted in any way due to its weight or size.

PIGMENT
Finely ground, natural or synthetic, inorganic or organic, insoluble particles that, when dispersed in a liquid vehicle to make paint, may provide color and other properties, including opacity, hardness, durability, and corrosion resistance. The term is used to include extenders as well as white or colored pigments.

PIGMENT SOLIDS
The amount of pigment in a dry paint, expressed as a percentage. Pigment solids may be calculated by weight or by volume.

PILE
A relatively slender deep foundation unit, wholly or partly embedded in the ground, that is installed by driving, drilling, auguring, jetting, or otherwise and that derives its capacity from the surrounding soil and/or from the soil or rock strata below its tip.

PINPOINT RUSTING
Tiny, dispersed points of rust that can appear at pinholes and holidays in a coating. Very dense pinpoint rusting can appear on painted steel surfaces where the coating does not completely cover the blast cleaning profile.

PJP (Partial Joint Penetration Groove Weld)
A groove weld that joint penetration is intentionally less than complete.

PLAIN ELASTOMERIC PAD (PEP)
A pad made exclusively of elastomer.

PLATE
A flat rolled steel product whose thickness exceeds 0.25 IN.

POINT OF CONTRAFLEXURE
The point where the sense of the flexural moment changes; synonymous with point of inflection.

POLYURETHANE
A coating material formed by the reaction of an isocyanate with hydroxyl-containing substances (polyols) to produce an organic compound known as a urethane. Many different materials can be produced by this type of reaction. Polyurethane materials that are most suitable for coatings show good chemical, solvent, and abrasion resistance, and good gloss retention.

POST-TENSIONING
A method of prestressing concrete in which tendons are tensioned after the concrete has hardened.

POT BEARING
A bearing which transmits vertical loads by compression on an elastomeric disc confined in a steel cylinder and which accommodates rotations by deformations of the disc.

POWER TOOL
A tool powered by air pressure or electricity. Power tools clean a surface of old paint, rust, mill scale, or other contaminants by impact, rotary abrasive action, or a combination of both. Commonly used power tools include power chippers, needle guns, descalers, wire brushes, sanding discs, grinding wheels, and rotary peeners.

POWER TOOL CLEANING
The use of power impact, rotary, or rotary impact tools to remove loose paint, rust, mill scale, and other loose contaminants from a surface. The specification SSPC-SP 3, "Power Tool Cleaning," is a consensus standard covering the procedures necessary for power tool cleaning of steel surfaces. Some tools can remove all paint, rust, and mill scale, and produce a surface profile in accordance with SSPC-SP 3, POWER TOOL CLEANING; SSPC-SP 11, POWER TOOL CLEANING TO BARE METAL.

POWER WASHING
The use of pressurized water (typically less than 5,000 psi {34.48 MPa}) with or without chemical additives, detergents, etc., to remove contamination and debris from a surface. See WATER BLAST CLEANING.

POWER WIRE BRUSH
A power tool with a brush made of knotted or crimped wire bristles in the form of a wheel or a cup used to clean steel, concrete, or masonry surfaces.

PRECAST MEMBERS
Concrete elements cast in a location other than their final position.

PRELIMINARY PLANS
Plans prepared during the early stages of the design of a project.

PRESTRESSED CONCRETE
Concrete in which internal compressive stresses have been introduced to reduce potential tensile stresses in concrete resulting from loads.

PRETENSIONING
A method of prestressing concrete in which tendons are tensioned before the concrete is placed.

PREVENTIVE MAINTENANCE PAINTING
Periodic application of a coating to an entire surface or to selected spots to maintain appearance and protection.

PRIMER
First full coat of paint applied to a surface when a multi-coat system is being used. Primers provide adhesion to a new substrate (wood, metal, masonry, or concrete), protect the substrate, and aid in the adhesion of additional coats of paint. The type and condition of the substrate and the painting system specified for a job affect the selection of the primer.

PROFILE
Contour of a blast-cleaned surface on a plane perpendicular to the surface. Profile is classified by its depth and its texture (rounded or angular). See also PROFILE DEPTH.

PROFILE DEPTH
A measure of the roughness of a surface based on the distance between its peaks and valleys, expressed sometimes as an average.

PROJECT MANAGER
The WVDOH representative who has overall approval authority of the Project.

PTFE SLIDING BEARING
A bearing which carries vertical load by contact stresses between a PTFE (polytetrafluorethylene) sheet or woven fabric and its mating surface, and which permits movements by sliding of the PTFE over the mating surface.

Q, R

RATING VEHICLE
A sequence of axles used as a common basis for expressing bridge resistance.

RECOAT TIME
The amount of time required for a coat of paint to dry or cure before a subsequent coat can be applied successfully.

RED LEAD
A reddish-orange anti-corrosive pigment used in primers for iron and steel, and consisting of lead tetroxide. It is rarely used because of the hazards of toxic exposure associated with manufacturing, applying, and removing leaded paints.

REDUNDANCY
The quality of a bridge that enables it to perform its design function in a damaged state.

RELATIVE HUMIDITY
The ratio of the actual pressure of existing water vapor to the maximum possible (saturation) pressure of water vapor in the atmosphere at the same temperature, expressed as a percentage.

RETAINING WALLS
Structures that provide lateral support for embankments or the soil in which they support.

RUST GRADE
In visual standards, the initial condition of unpainted steel before surface preparation. SSPC-VIS 1, a visual standard for the surface preparation of steel, outlines the following four rust grades: (1) RUST GRADE A – The steel surface is completely covered with adherent mill scale; little or no rust is visible. (2) RUST GRADE B – The steel surface is covered with both mill scale and rust. (3) RUST GRADE C – The steel surface is completely covered with rust; little or no pitting is visible. (4) RUST GRADE D – The steel surface is completely covered with rust; pitting is visible.

S

SAMPLING OF DEBRIS
Methods for obtaining representative samples of debris to determine whether they contain hazardous materials. Methods include simple random sampling, stratified random sampling, authoritative sampling, and systematic random sampling. These methods are defined in EPA manual SW-846.

SAND BLAST CLEANING
Blast cleaning a surface with silica sand, flint, or other crystaline silica abrasives, normally to remove dirt, paint, rust, or mill scale, and sometimes to roughen it in preparation for coating. See also ABRASIVE BLAST CLEANING.

SCOUR
Erosion of streambed or bank material due to flowing water.

SCUPPER
A small opening (usually vertical) in the deck, curb, or barrier used to drain strom runoff from the bridge deck.

SELF-CURING
A coating that cures (crosslinks) without any special treatment after application.

SELF-PRIMING
A paint that can be used, perhaps in different consistencies, both to prime and to coat a surface.

SEMIGLOSS
A gloss range between high gloss and eggshell, approximately 35 to 70 on the 60-degree gloss scale. See also GLOSS.

SEMI-INTEGRAL ABUTMENT
Semi-integral abutments can be either wall or stub type abutments. with the beams cast in a closure diaphragm that is structurally independent from the stem.

SET-TO-TOUCH TIME
The time required for wet paint or varnish to set up enough so that none of the coating sticks to a finger that touches it.

SHALLOW FOUNDATION
A foundation which derives its support by transferring load directly to the soil or rock at shallow depth.

SHOP COAT(S)
Coat(s) of paint applied to a surface or fabricated article in a shop before shipment to a job site.

SHOP DRAWINGS
Drawings, diagrams, illustrations, schedules, performance charts, brochures, and other data prepared by the contractor or any subcontractor, manufacturer, supplier, or distributor, which illustrate how specific portions of the work shall be fabricated and/or installed.

SHOP PAINTING
Preparing and coating a surface or fabricated article in a shop before shipment to a job site.

SHOT ABRASIVE
Smooth abrasive with the configuration of a BB, normally made of steel. See also METALLIC ABRASIVE, STEEL ABRASIVE.

SHOT BLAST CLEANING
Abrasive blast cleaning with cast steel shot or any material that maintains a spherical shape. See also SHOT ABRASIVE.

SILICA SAND ABRASIVE
A blast cleaning abrasive manufactured from material consisting predominantly of the mineral quartz, which is washed, dried, and screened (sieved). Exposure to breathable sizes of crystalline silica (10 microns or smaller) can cause silicosis, a progressive lung disease. See also NON-METALLIC ABRASIVE.

SLAG ABRASIVE
A blast cleaning abrasive made from slag produced by metal-smelting operations or by coal-fired boilers and power plants. Most slags are processed by quenching in water, crushing when necessary, washing, and screening to produce an acceptable abrasive. Slag abrasive manufactured by an air-cooling process has a different mineral structure. The quality and durability of the abrasive depends upon the processing and can vary widely from batch to batch and from source to source. Typical slag abrasives include copper and nickel slag from metal smelting and coal slag from electric power generation.

SLIDING BEARING
A bearing which accommodates movement by slip of one surface over another.

SLOW DRYING
A coating that requires more than 24 hours to dry under ambient conditions.

SKEW / SKEW ANGLE
Angle between the centerline of a support and a line normal to the roadway centerline.

SOIL LEAD LEVEL
The total lead in soil determined by atomic absorption spectroscopy or inductively coupled plasma atomic emission spectroscopy. Note that this value represents the total lead in soil rather than the leachable lead. (Leachable lead is used to establish whether debris is a hazardous waste.)

SOLIDS
Nonvolatile matter in a coating composition; the ingredients of a coating composition that, after drying, are left behind and form the dry film.

SOLVENT
Liquid, usually volatile, used in the manufacture of paint to dissolve or disperse the film-forming constituents. Since they evaporate during drying, solvents do not become part of the dried film. Solvents are used to control the consistency and character of the liquid paint material and to regulate its application properties.

SOLVENT CLEANING
The use of organic solvents, detergents, alkaline cleaners, and steam cleaning to remove oil, grease, dirt, soil, and other, similar organic compounds from a surface. The specification SSPC-SP1, "Solvent Cleaning," is a consensus standard covering the procedures necessary for solvent cleaning of steel surfaces. Consult the document for specific details and requirements.

SPALLING
The breaking away of surface concrete from an element.

SPAN LENGTH
The distance between two supports of a bridge, measured between bearings.

SPOT PRIMING
Application of primer paint to localize spots where the substrate is bare or where additional protection is needed because of damage to or deterioration of a former coat.

SPOT REPAIR
Patching, spackling, or other repair of small areas, normally prior to spot priming.

SPRAYING
An application method in which coating material is sprayed onto a surface after being atomized, usually by a compressed air jet (air spray) or by direct pressure flow through a small orifice nozzle (airless spray).

SSPC
The Society for Protective Coatings (formerly Steel Structures Painting Council).

SSPC-PA 1, SHOP, FIELD, AND MAINTENANCE PAINTING
The Society for Protective Coatings Paint Application Specification No. 1. The specification covers procedures for painting steel surfaces after the selection of the coatings material has been made. It does not cover surface preparation, pretreatments, or selection of primers and finish coats. SSPC-PA 1 is intended to be used for steel which, because of its exposure condition, will be subjected to corrosive attack, either from the weather or from the service environment, and where a high quality of cleaning and painting is essential.

SSPC-PA 2, MEASUREMENT OF DRY PAINT THICKNESS WITH MAGNETIC GAGES
The Society for Protective Coatings Paint Application Specification No. 2. The specification describes the procedures to measure the thickness of a dry film of a nonmagnetic coating applied on a magnetic substrate using a magnetic gage that is nondestructive to the film.

SSPC-PA 3, A GUIDE TO SAFETY IN PAINT APPLICATION
The Society for Protective Coatings Paint Application Guide No. 3. This guide defines methods and practices that are most practical in maintaining safety during application of protective coatings on steel structures. The objective of the guide is to itemize basic actions and care that should be considered while working in or on access facilities, using professional tools to apply materials having potential hazards.

SSPC-PA 4, GUIDE TO MAINTENANCE REPAINTING WITH OIL BASE OR ALKYD PAINTING SYSTEMS
The Society for Protective Coatings Paint Application Guide No. 4. This guide outlines the components of a complete maintenance repainting system. It covers the steps necessary for repainting steel structures, which previously were painted with oil base, alkyd, or other conventional oleoresinous paint systems, using the same generic paint system as the existing one.

SSPC-PA 5, GUIDE TO MAINTENANCE PAINTING PROGRAMS
The Society for Protective Coatings Paint Application Guide No. 5. The guide covers procedures for planning and carrying out a maintenance painting program for steel and other structures to prevent corrosion and maintain appearance. It may be used for one-time repaint programs or long-range paint programs.

SSPC-SP 1, SOLVENT CLEANING
The Society for Protective Coatings Surface Preparation Specification No. 1. Solvent cleaning is a method for removing all visible oil, grease, soil, drawing and cutting compounds, and other soluble contaminants form steel surfaces. It is intended that solvent cleaning be used prior to the application of paint and in conjunction with surface preparation methods specified for the removal of rust, mill scale, or paint.

SSPC-SP 2, HAND TOOL CLEANING
The Society for Protective Coatings Surface Preparation Specification No. 2. Hand tool cleaning is a method of preparing steel surfaces by the use of non-power hand tools. Hand tool cleaning removes all loose mill scale, loose rust, loose paint, and other loose detrimental foreign matter. It is not intended that adherent mill scale, rust, and paint be removed by this process. Mill scale, rust, and paint are considered adherent if they cannot be removed by lifting with a dull putty knife.

SSPC-SP 3, POWER TOOL CLEANING
The Society for Protective Coatings Surface Preparation Specification No. 3. Power tool cleaning is a method of preparing steel surfaces by the use of power-assisted hand tools. Power tool cleaning removes all loose mill scale, loose rust, loose paint, and other loose detrimental foreign matter. It is not intended that adherent mill scale, rust, and paint be removed by this process. Mill scale, rust, and paint are considered adherent if they cannot be removed by lifting with a dull putty knife.

SSPC-SP 5, WHITE METAL BLAST CLEANING
The Society for Protective Coatings Surface Preparation Specification No. 5. A white metal blast cleaned surface, when viewed without magnification, shall be free of all visible oil, grease, dirt, dust, mill scale, rust, paint, oxides, corrosion products, and other foreign matter.

SSPC-SP 6, COMMERCIAL BLAST CLEANING
The Society for Protective Coatings Surface Preparation Specification No. 6. A commercial blast cleaned surface, when viewed without magnification, shall be free of all visible oil, grease, dirt, dust, mill scale, rust paint, oxides, corrosion products, and other foreign matter, except for staining, which shall be limited to no more than 33 percent of each square inch of surface area. Staining may consist of light shadows, slight streaks, or minor discoloration caused by stains of rust, stains of mill scale, or stains of previously applied paint. Slight residues of rust and paint may also be left in the bottom of pits if the original surface is pitted.

SSPC-SP 7, BRUSH –OFF BLAST CLEANING
The Society for Protective Coatings Surface Preparation Specification No. 7. A brush-off blast cleaned surface, when viewed without magnification, shall be free of all visible oil, grease, dirt, dust, loose mill scale, loose rust, and loose paint. Tightly adherent mill scale, rust, and paint may remain on the surface. Mill scale, rust, and paint are considered tightly adherent if they cannot be removed by lifting with a dull putty knife. The entire surface shall be subjected to the abrasive blast. The remaining mill scale, rust, or paint shall be tight. When painting is specified, the surface shall be roughened to a degree suitable for the specified paint system.

SSPC-SP 8, PICKLING
The Society for Protective Coatings Surface Preparation Specification No. 8. Pickling is a method of preparing steel surfaces by chemical reaction, electrolysis, or both. The surfaces, when viewed without magnification, shall be free of all visible mill scale and rust.

SSPC-SP 10, NEAR-WHITE BLAST CLEANING
The Society for Protective Coatings Surface Preparation Specification No. 10. A near-white blast cleaned surface, when viewed without magnification, shall be free of all visible oil, grease, dirt, dust, mill scale, rust, paint, oxides, corrosion products, and other foreign matter, except staining, which shall be limited to no more than 5 percent of each square inch of surface area. Staining may consist of light shadows, slight streaks, or minor discolorations caused by stains of rust, stains of mill scale, or stains of previously applied paint.

SSPC-SP 11, POWER TOOL CLEANING TO BARE METAL
The Society for Protective Coatings Surface Preparation Specification No. 11. Metallic surfaces prepared according to this specification, when viewed without magnification, shall be free of all visible oil, grease, dirt, dust, mill scale, rust, paint, oxide, corrosion products, and other foreign matter. Slight residues of rust and paint may be left in the lower portion of pits if the original surface profile shall not be less than 1 mil (25 microns).

SSPC-SP-12, SURFACE PREPARATION AND CLEANING OF STEEL AND OTHER HARD MATERIALS BY HIGH AND ULTRA HIGH-PRESSURE WATER JETTING PRIOR TO RECOATING
The Society for Protective Coatings Surface Preparation Specification No. 12 The Standard provides requirements for the use of high and ultra high-pressure water jetting to achieve various degrees of cleanliness.

SSPC-VIS 1, VISUAL STANDARD FOR ABRASIVE BLAST CLEANED STEEL
The Society for Protective Coatings Visual Standard No 1. The standard consists of a series of color photographs that represent various conditions of unpainted steel surfaces prior to and after surface preparation by abrasive blast cleaning. The photographs are intended to be used to supplement the written SSPC blast cleaning surface preparation specifications.

SSPC-VIS 2, STANDARD METHOD OF EVALUATING DEGREE OF RUSTING ON PAINTED STEEL SURFACES
The Society for Protective Coatings Visual Standard No. 2. The standard consists of a series of color photographs that represent various amounts of visible rusting on painted steel surfaces. It illustrates four levels of rusting that range from 0.03 percent to 10 percent rust. The standard also includes a rust grading scale that ranges form 10 (no rust or less than 0.01 percent rust) to 0 (100 percent rust).

SSPC-VIS 3, VISUAL STANDARD FOR POWER- AND HAND-TOOL CLEANED STEEL
The Society for Protective Coatings Visual Standard No. 3. The standard consists of color photographs that represent various conditions of unpainted, painted, and welded steel surfaces prior to and after power and hang tool cleaning. The photographs are intended to be used to supplement the written SSPC power and hand tool surface preparation specifications.

STANDARD SPECIFICATIONS
The *West Virginia Division of Highways Standard Specifications, Roads and Bridges* including the latest supplemental specifications.

STEEL ABRASIVE
Cast steel shot or grit used for abrasive blast cleaning. Cast steel shot consists of nearly spherical particles of steel obtained by granulating a molten stream of metal with water or air, or by other methods. Cast steel grit consists of angular particles produced by crushing steel shot.

STEEL REINFORCED ELASTOMERIC BEARING
A bearing made from alternate laminates of steel and elastomer, bonded together during vulcanization.

SUBSTRUCTURE
Structural components of the bridge, which support the superstructure.

SUBTRATE
Any surface to be painted, including wood, concrete, masonry, steel, other metals, and various other materials. A previously unpainted surface sometimes is called the "original substrate."

SUPERSTRUCTURE
Structural components of the bridge, above the substructure.

SURFACE
(1)An area to be coated. (2) Characteristics of the area to be coated. (3) The kind of finish obtained after the coating work is finished.

SURFACE PREPARATION
Any method of treating a surface to prepare it for coating. Surface preparation methods include washing with water, detergent solution, or solvent; cleaning with hand or power tools; water washing or jetting with or without abrasive; or abrasive blast cleaning. The SSPC and NACE International have a number of written and visual standards describing the surface preparation of steel surfaces prior to painting.

SURFACE PROFILE
The roughened surface that results from abrasive blast cleaning or power tool cleaning to bare metal. For steel, surface profile is a measurement of the peak-to-valley height of the roughness, often expressed as an average, and typically ranges from less than 1 mil up to 5 mils (25-127 microns). For wood and concrete, surface profile is simply the texture of the cleaned surface.

SURFACE TENSION
The work required to enlarge the surface of a liquid, expressed as dynes/cm. Surface tension tends to minimize the volume and surface area of a liquid.

SURFACE-TOLERANT COATING
(1) A very loose, general description of a coating. A "surface-tolerant coating" must be further qualified as to the types of surfaces over which it can be applied successfully. For example, application over an aged alkyd coating, an oily or greasy, salt-contaminated, or damp or wet surface, loose, stratified, or tight rust, etc., can all require a different type of surface-tolerant coating. (2) A coating designed to be applied over a lesser degree of surface preparation than commercial blast cleaning (SSPC-SP 6).

SWEEP BLAST CLEANING
A fast pass of the abrasive blasting pattern over a surface to remove loose material and to roughen the surface sufficiently to successfully accept a coat of paint. This method of cleaning sometimes is specified as SSPC-SP 7, Brush-off Blast Cleaning.

T

TENDON
Wire, strand, or bar, or bundle of such elements, used to prestress concrete.

THROUGH DRYING
Drying of the complete coating film, including both top and bottom.

TIE COAT
A paint formulated specifically to provide a transition from a primer or undercoat to a finish coat. Tie coats are used to seal the surface of a zinc-rich primer, to bond generally different types of coatings, or to improve the adhesion of a succeeding coating.

TOP COAT
The last coating material applied in a coating system, specifically formulated for aesthetics and/or environmental resistance. Also referred to as the finish coat.

TOP DRYING
Drying of a coating film on the top or surface but not beneath it.

TOUCH-UP PAINTING
Painting to repair chips, scratches, and spots where the coating has deteriorated or been damaged. Touch-up painting usually is done within a few months of the initial painting.

TOXICITY CHARACTERISTIC LEACHING PROCEDURE (TCLP)
A test for determining whether or not debris is hazardous based on an analysis of the leachate by either atomic absorption spectroscopy or inductively coupled plasma atomic emission spectroscopy. Procedures for conducting the tests are found in Appendix II if 40 CFR 261, "Identification and Listing of Hazardous Waste." Enactment of land disposal restrictions has caused this test to be used instead of the EP Toxicity test, which was the primary method of testing prior to enactment of the unprotected.

TRANSLATION
Movement in the longitudinal or transverse direction.

TRANSVERSE
Direction normal to the longitudinal axis of the bridge.

TRANSVERSE INTERMEDIATE STIFFENER
Stiffeners that are placed between supports and are used to prevent web buckling and increase shear capacity of a steel girders web.

TWO-PERCENT (Q_{50}) FLOW LINE
The water surface elevation that is not expected to be exceeded more than two-percent of the time at a particular location.

U

UNDERCUTTING
The penetration of a coating and the spread of delamination or corrosion from a break or pinhole in the film or from unprotected edges.

UNDERFILM CORROSION
Corrosion that occurs between a coating and the metal substrate without a break in the coating layer.

V

VACUUM-SHROUDED POWER TOOL
Power tool equipped with a vacuum shroud to capture dust, debris, and other materials while they are being generated and prevent them from escaping into the environment. See also POWER TOOL CLEANING.

VEHICLE
The liquid portion of paint in which the pigment is dispersed. It is composed of binder, solvent, and anything dissolved in the liquid portion of the paint. See also BINDER.

VINYL COATING
A coating based upon one of many forms of vinyl resin, such as vinyl acetate or polyvinyl chloride. Solvent-borne industrial coatings based on vinyl resins have seen widespread use for immersion in water and exposure to chemicals, but their use recently has been limited by VOC regulations.

VOLATILE ORGANIC COMPOUND (VOC)
(1) Any organic compound that reacts in the atmosphere with nitrogen oxides in the presence of heat and sunlight to form ozone. (2) Any organic compound (other than those designated by EPA as having negligible photochemical reactivity) this is emitted into the atmosphere during the application or curing of a coating. It is detected by reference methods such as EPA Method 24 or ASTM D-2369, Standard Test Method for Volatile Content of Coatings.

VOLUME PERCENT SOLIDS
The nonvolatile or solid components of a coating, expressed as percent by volume. This number can be used to calculate the amount of wet film thickness that needs to be applied to produce the desired dry film thickness of a coating. For instance, a coating with 50 percent volume solids will require twice as much wet film thickness as is desired in the dry film thickness, because half the material will volatilize.

W

WASH PRIMER
Priming paint usually supplied as a one-or two-component system. The paint contains carefully balanced proportions of an inhibiting chromate pigment, phosphoric acid, and synthetic resin binder mixed in an alcohol solvent. On clean, light alloy, or ferrous surfaces, and on many nonferrous surfaces, such paints give excellent adhesion, partly due to chemical reaction with the substrate, and give a corrosion-inhabiting film that is a good basis for the application of subsequent coats of paint.

WATER BLAST CLEANING
An alternative to air abrasive blast cleaning for wood, concrete, metal, or other surfaces. Water blast cleaning can be used with or without abrasive injection. Water blasting at pressures up to 5,000 psi (35 MPa) is called low pressure water blasting or power washing. High pressure water blasting uses water pressures between 5,000 and 10,000 psi (35-70 MPa). Water jetting is water blasting at pressures between 10,000 and 25,000 psi (70-170 MPa). Ultra high pressure water jetting is water blasting at pressures above 25,000 psi (170 MPa).

WATER JETTING
Using water at high pressure (10,000 to 25,000 psi [70-170 MPa]) or ultra high pressure (greater than 25,000 psi [170 MPa]) to remove paint and debris from a surface.

WATER JETTING WITH ABRASIVE INJECTION
Using water at high pressure (10,000 to 25,000 psi [70-170 MPa]) or ultra high pressure (greater than 25,000 psi [170 MPa]) with abrasive injected into the water stream to remove paint, rust, and mill scale, and impart a profile on a metal surface.

WEATHERING
Behavior of paint films when exposed to natural weather or accelerated weathering equipment, characterized by changes in color, texture, strength, chemical composition, or other properties. Natural outdoor weathering tests normally are carried out at selected exposure sites on paints panels generally exposed either vertically or at 45 degrees facing south in the northern hemisphere.

WET ABRASIVE BLAST CLEANING
Adding water to an abrasive blast cleaning operation by one of several methods, including use of abrasive slurry under pressure, injection of water into the abrasive stream or external application to the abrasive stream as it exits the blast nozzle, or injection of inhibitors may be added to the water or used in a follow-up rinse.

WETTING
The ability of a vehicle to spread uniformly and rapidly over the surface of pigment particles. A vehicle with good wetting properties assists in the grinding or dispersion of pigments and the ability to wet the surface to which the coating is applied.

WHITE METAL BLAST CLEANING
Highest grade of blast cleaning. According to The Society for Protective Coatings Surface Preparation Specification No. 5, "White Metal Blast Cleaning" (SSPC-SP 5), a white metal blast cleaned surface is free of all visible oil, grease, dirt, dust, mill scale, rust, paint, oxides, corrosion products, and other foreign matter. White metal blast cleaning also is defined in NACE No. 1, "White Metal Blast Cleaned Surface Finish." NACE and SSPC have a joint effort underway to develop a unified consensus on blast cleaning standards.

WIRE BRUSH CLEANING
Cleaning a surface with a wire brush that is either a hand tool or a power tool.

WSPRO (Water-Surface Profile computation model)
FHWA's water-surface profile computation model is used to develop water-surface profiles for open channel flow.

X, Y, Z

ZINC-RICH COATING
Anti-corrosive primer for iron and steel. Zinc-rich coatings use zinc dust in a concentration sufficient to provide electrical conductivity in the dried film. This enables the zinc metal to corrode preferentially to the ferrous substrate, giving galvanic protection.

INDEX

A

AASHTO, 2-1, 2-19, 2-21, 2-30-33, 3-1-2, 3-37, 7-1
  Guide Specifications for Design of Pedestrian Bridges, 2-29
  Guide Specifications for Horizontally Curved Steel Girder Highway Bridges, 3-29
  LRFD Bridge Design Specifications, 2-1
Abutment(s), 2-22, 3-53, 3-62
  Bridge Seat, 3-53
  Integral, 2-23, 3-62
  Pedestals, 2-22
  Semi-Integral, 2-23, 3-68
  Stub, 2-23
  Types, 2-22
  Wall, 2-22
  Wingwalls, 2-23, 3-59
ADT (Average Daily Traffic), 3-4, 3-9, 3-35, 3-45, 3-88
Aesthetics, 2-27, 2-49
AISC, 3-25
Allowable Stress, 3-41
ANSI/AASHTO/AWS Bridge Welding Code, A-4
Approach, 2-10, 3-88, 4-9, 4-24
  Embankment(s), 2-10
  Slab(s), 3-88, 4-9, 4-24
Auxiliary Stiffeners, 3-21

B

Backfill, 4-12
Backwater, 4-10
Barriers, 3-9
  Type F, 3-9
Beam(s),
  Length, 3-34
  Post-Tensioned, 2-21
  Prestressed, 2-19, 3-32, 5-2, 7-2
  Rolled, 2-14, 7-2
  Spacing, 2-21
Beam(s) - [see also girder], 2-14, 2-16, 2-19, 2-21, 3-27, 3-32, 3-46
Bearing Stiffeners, 3-17
Bearing(s),
  Elastomeric, 2-39, 3-47, A-5
  Expansion, 4-23
  Fixed, 3-47
  PTFE, 3-47
  Rehabilitation, 2-31
  Replacement, 3-49
Blast Cleaning, A-3, D-11
Bolted Connections, 3-26
Box Girders, 2-16
Bracing, 3-23
  Temporary, 3-25, 3-44, 4-13, 4-24, 4-32
Bridge(s), 2-3, 2-9, 2-26, 2-30, 2-41, 2-44, 2-47, 3-27, 3-29
  Curved, 2-26, 3-6, 3-27, 3-29
  Document Submission, 2-47
  Inspection, 2-30, 3-110
  Length, 2-6, 3-34
  Over Railroads, 4-11
  Over Roadways, 4-11
  Over Waterways, 4-10
  Permits, 2-41, B-1
  Plans, 2-48
  Rehabilitation, 2-31, 2-37
  Widening, 2-31
Buried Structures, 2-29

C

Cable Stayed, 2-17, 2-22
CADD Standards, 4-1
  File Nomenclature, 4-1
Caissons,
  Drilled Caissons, 2-25, 3-85
Camber, 3-44
  Curve, 3-44
Cantilever, 3-71
Clearances, 2-46
  Minimum, 2-7, 2-46
  Navigation, 2-41

Railroad, 2-7, 2-44, 2-46
Coatings, 2-33, D-1, D-4
Adhesion, D-7
Concrete, D-15
Containment, D-4, D-12
Corrosion, D-6
Dry Film Thickness, D-6
Existing, D-4, D-8, D-14
Lead, A-7, D-10
Removal, 2-37, A-4, B-2, D-4, D-10, D-14
Steel, D-1
Surface Preparation, D-4, D-14
Types, D-1
Collision Force, 3-2, 3-3
Columns, 3-82
Composite, 3-27
Girder, 3-27
Regions, 3-27
Sections, 3-27
Compresson,
Seals, 2-40
Computer Design Software,
Hydraulic, 6-1
Concrete,
Bridge Rehabilitation, 2-36
Class B, 3-53, 3-82
Class K, 3-5, 3-7
Clear Cover, 3-7, 3-40
Coatings, 2-33, D-1
Deck, 2-37
Rehabilitation, 2-36
Repair, 2-36
Slab, 2-18
Slab Bridge, 2-18
Concrete Deck, 2-37, 3-7
Connections, 3-25, 7-2
Bolted, 3-26
Cross Frame, 3-23
Welded, 3-25
Connectors,
Steel Stud Shear, 3-28
Construction Joints, 3-43, 3-59-60, 4-21
Construction Sequence, 3-11
Construction, Methods of
Balanced Cantilever Method, 3-37
Span-by-Span Method, 3-37
Contract Duration,
Establishing, 2-52
Contract Plans, 4-1, 7-5
Corrosion, 2-10, D-6
Counterforts, 3-71
Crash Walls, 2-44
Creep, 3-38
Cross-Frames,
Spacing, 3-23
Crossings,
Cultural and Natural Resources, 2-7
Highway, 2-7
Railroad, 2-7
Curbs, 3-14
Curved Bridges, 2-26, 3-6, 3-27, 3-29

D

DD (Design Directives), 1-1, 2-1, 2-2, 2-30, 2-52
Dead Load, 3-2
Debonding, 3-32
Deck,
Construction Joints, 4-21
Drainage, 3-11
Overhangs, 3-8
Steel Grid, 3-13
Timber, 3-14
Deflection, 3-10
Design,
Report, 2-47
Details,
Barrier, 3-9
Deck, 3-8, 3-12
Erection, 3-23, 4-24
Miscellaneous, 4-23
Superstructure, 4-18
Diaphragm Connection Plates, 3-17
Diaphragm(s), 3-23
Dimensions, 4-3
District Bridge Engineer, 2-30, 2-50, 3-87
Bridge Inspection, 2-30
Division of Highways, 1-1, 2-1-2
Dowels, 2-36
Drainage,

Backfill, 3-62, 3-71
Deck, 3-11
Highway, 2-2
Railroad, 2-46
Drawings,
CADD, 4-1, 6-1
Contract, 4-1, 7-5
File Nomenclature, 4-1
Index of, 4-11, 4-29
Level Methodology, 4-4
Physical Size of, 4-3
Preliminary, 2-47-48
Scales, 4-3, 4-4
Sequence, 4-9, 4-28
Shop, 3-77, 7-1-5
Standard, 3-34, 4-3, 5-1
Substructure, 4-9, 4-14
Superstructure, 4-9, 4-17, 5-1

E

Elastomeric Bearing(s), 2-40, 3-47, 4-19, 7-3, A-5
Electronic Data Submittal Checklist, 4-2
Elevation View, 4-10-11, 4-15-17, 4-25, 4-30
Embankment, 2-6, 2-10, 2-26
Environmental Documentation, 2-1
Epoxy, 2-36, 2-38
Expansion Bearings,
PTFE, 3-47
Expansion Joints, 2-38, 3-35, 3-49, 3-62, 3-89

F

Factors,
Distribution, 3-5, 3-108
Load, 3-1, 3-4
Fasteners, 3-25
Fatigue, 2-33, 3-23, 3-42
FEMA, 2-2, E-2
Fencing,
Protective, 2-28
FHWA, 4-7, E-2
File Format, 4-1
File Nomenclature, 4-1
Final Detail Plans, 2-51
Footing(s),
Spread, 2-25, 3-83
Forms,
DS-21, 3-87, C-5
DS-25, C-1
DS-34, 3-87, C-17
Foundation(s),
Piling, 2-25, 3-84
Protection, 3-86
Scour, 3-87
Spread Footing, 2-25, 3-83
Types, 2-24
Freeboard, 2-6
Friction,
Piles, 3-83

G

Galvanizing, D-1-2
General Notes, 4-12, 4-28, 5-1
General Plan, 4-9, 4-28
Geometric(s),
Guidelines, 2-3
Line and Grade, 2-2
Geotechnical,
Construction Phase, 2-12
Investigations, 2-7
Planning, Development, and Engineering Phase, 2-11
Post-Construction Phase, 2-12
Project Design Phase, 2-11
Report, 2-51
Tasks, 2-11
Girder(s),
Box, 2-16, 3-41
Flanges, 3-21
Longitudinal Stiffeners, 3-21
Steel,
Curved, 2-26, 3-6, 3-27, 3-29, 3-95
material, 3-15, 3-28, A-1
stiffeners, 3-17, 3-21
welding, 2-33, 3-25
Governing Specifications, 2-1
Guardrail, 3-9, 3-34, 3-109

H

HEC-2, 6-1

HEC-RAS, 2-6, 6-1
Highway Drainage, 2-2
Holes,
  Bolt, 3-24, 7-3
  Core, 2-9
Horizontal,
  Curve, 2-18,3-29
Hydraulic(s), 2-2, 3-11
Hydrology, 2-2

I

Integral Abutment, 2-23, 3-53, 3-62

J

Jacking,
  Bearings, 3-47, 3-49
  Stiffeners, 3-21
Joints,
  Closed, 2-39
  Compression, 3-43
  Construction, 3-43
  Deck, 2-38
  Modular, 3-50
  Open, 2-39

L

Lagging, 3-72
Level Methodology, 4-4
Live Load, 3-2
  Distribution Factor, 3-5
Load Factor Design (LFD), 3-1
Load Rating, 3-89-108
  Curved Structures, 3-95
  Prestressed Concrete Beams, 3-93
  Sample Calculations, 3-97
  Steel Beams and Girders, 3-91, 3-95
  Table, 4-27
  Tangent Structures, 3-91
Load(s),
  Dead, 3-2
  Factors, 3-4
  Ice, 3-3
  Live, 3-2, 3-5
  Seismic, 3-3
Longitudinal Stiffeners, 3-21

M

Media Data Formats, 4-2
Metalizing, D-2
Miscellaneous Structures, 2-11, 2-29
Mortar, 2-36
MSE Walls, 3-74-77
  Plans, 4-28

N

NDT (Non-destructive Testing), 3-26
New Bid Item Number, 4-7
NHS (National Highway System), 3-3, 3-9
Non-composite, 3-27

P

Painting, 2-33
Parapet(s) - [See also Barriers]
Pedestrian Structures, 2-29
Permits,
  106 Process (Historic), 2-43
  Checcklists, B-1-2
  Coast Guard, 2-41, B-2
  US Army, Corps Of Engineers, B-1
Phase(s),
  Construction, 2-12
  Planning, Development, and Engineering, 2-11
  Post-Construction, 2-12
  Project Design, 2-11
Pier(s),
  Cap, 2-24
  Class B Concrete, 3-5, 3-82
  Column, 3-82
  Collision, 3-2-3
  Crash Wall, 2-44
  Scour, 3-87
  Sheets, 4-16
  T-Type, 2-24
  Types, 2-24
  Wall, 2-24
Piles,
  Embedment, 3-84
  Footing, 2-25
  Steel H, 3-84

Walls, 3-74
Piling, 2-25
Foundations, 3-84
Piers, 2-25
Scour, 3-87
Plan(s),
Construction, 4-13
Contract, 4-1
Existing Bridge, 4-26
Framing, 4-17
Notes, 4-12, 4-28
Presentation, 2-51
Scales, 4-4
Situation, 4-25, 4-32
Standard, 5-1
Plate Girders, 2-14, 3-14
Post-tensioned,
I-Beams, 2-21
Prestressed Concrete, 2-19, 3-32
Span Length, 2-21
Strands, 3-32
Proprietary Walls, 3-74
Protective Fencing, 2-28
PS&E, 2-51

Q

Quantities,
Accuracy of, 4-5
Estimate of, 4-5
Quantity of Emissions, D-13

R

Railing,
Bridge, 3-10
Railroad, 2-7, 2-44, 2-46
Approval, 2-44
Clearances, 2-46, 4-11
Considerations, 2-44
Crash Wall(s), 2-44
Crossing, 2-7
CSX, 2-7, 2-44
Drainage, 2-46
Norfolk Southern Corporation, 2-7
Rating, 3-89-108, 4-26-27
Computations, 3-90-108
Moment, 3-95-96, 3-100-102
Shear, 3-106-107, 4-19, A-5
Rehabilitation, 2-30-41
Bearings, 2-40
Bridge Inspection, 2-30
Closed Joints, 2-39
Coatings, 2-33, D-4-15
Concrete, 2-36-37, A-4
Deck Joints, 2-38
Historical Structures, 2-41
Open Joints, 2-39
Steel, 2-32-35, D-4-15
Techniques, 2-31
Timber, 2-38
Widening, 2-31
Reinforced Concrete,
Approach Slab, 3-89
Deck, 2-37-38, 3-13, A-7
Slab Bridge, 2-18
Reinforcement, 2-36, 3-8, 3-10, 3-27-28, 3-33, 3-43-44, 3-88
Approach Slabs, 3-88
Barriers, 3-9-10
Deck, 2-37, 3-7-8, 4-20-21
Prestressed Beams, 3-33
Reinforcing Schedule, 4-16-17, 4-27-28, 4-31
Reinforcing Steel, 3-6, 4-4, 4-12-13
Abutments, 3-53, 4-15-16
Approach Slab, 4-24
Deck, 4-20
Pier, 4-17
Resource Files, 4-3
Retaining Walls, 2-11, 3-69-81, 4-28-32, A-6
Cantilever, 3-71
Counterforts, 3-71
Gravity, 3-71
MSE, 2-23, 3-74-77, 3-78, 3-80-81, 4-29-32
Pile, 3-74, 4-31
Tie-Back, 3-74
Right-of-Way, 2-2
Roadway, 4-23, 4-29-32
Clearances, 2-8, 4-11
Design Criteria, 2-1
Elevations, 3-59, 4-9, 4-23

Rolled Beams, 2-14, 4-18, 7-2, A-3

S

Scales, 4-4
Scour, 2-3, 2-6, 2-9-10, 2-25, 2-50-51, 3-85-88, 4-12, C-15
Seals, 2-39-40, A-5
  Compression, 2-39-40
  Strip, 2-39-40, A-5
Segmental Concrete Boxes, 2-21
Seismic, 2-31, 3-3, 3-75
  Bridge Seat, 3-53
  Design, 2-31, 3-3
Semi-Integral Abutment, 2-22-23, 2-39-40, 3-50, 3-62, 3-66-68, 4-24-25
Shear Ratings, 3-93, 3-96, 3-103, 3-107
Sheet(s),
  Abutments, 4-14-16
  Approach Slabs, 4-24
  Beam or Girder Elevation, 4-18
  Construction Sequence, 4-13
  Core Borings, 4-26, 4-32
  Deck Layout, 4-20-22
  Erection Details, 4-24
  Estimate of Bridge Quantities, 4-13
  Estimate of Retaining Wall Quantities, 4-29
  Existing Bridge Plans, 4-26
  Foundation Layout, 4-14
  Framing Plan, 4-17-18
  General Notes, 4-12-13, 4-28-29
  Index of Drawings, 4-11, 4-29
  Load Rating, 4-26-27
  Miscellaneous Details, 4-23, 4-32
  Piers, 4-16-17
  Reinforcing Schedules, 4-27-28, 4-31
  Situation Plan, 4-25, 4-32
  Size and Format, 4-4
  Superstructure Details, 4-18-20
  Temporary Construction Access, 4-14
  Typical Deck Section, 4-21
  Typical Wall Sections, 4-30-31
Shop Drawings, 7-1-5
Shrinkage, 3-38
Sidewalk, 3-14, 3-62, 4-21
  Barrier, 3-10
Situation Plan, 4-25, 4-32
Skew, 2-3, 3-5, 3-8, 3-27, 3-32-33, 3-53, 3-62, 4-11, 4-20
  Angle, 4-4, 4-10-11, 4-14, 4-16, 4-17
Slab(s), 3-7
  Bridges, 2-18-19
Slope Protection, 3-86
Slope Stability, 2-26
Span Arrangement Study, 2-48-49
Span Length, 2-21
Special Provisions, 2-50-52, 3-15, 3-27, 3-85, 4-8
Specification Hierarchy, 4-8
Specifications, 1-1, 2-1, 2-26, 2-52, 3-1, 3-29, 4-7, A-1
  AASHTO LRFD Bridge Design Specifications, 2-1, 3-1
  AASHTO Standard Specifications (LFD), 3-1, 3-24, 3-33
  AISC LRFD Specifications, 3-25
  Segmental Concrete Structures, 3-37
Splices,
  Bolted, 3-26
  Field, 2-16, 3-16, 4-19, A-1
  Welded, 3-25
Spread Footing, 2-25, 3-83-84
Standard Bridge Plans, 5-1-3
Standard Details, 4-3
Standard Drawings, 4-3-4, 5-1
Steel, 2-13-17, 2-35, 3-6, 3-14-30, 3-97-103, A-1-3, D-1-15
  Bridge Rehabilitation, 2-30-41
  Coatings, 2-33, 3-111, D-1, D-4, D-10
  Cracks, 2-32-35
  Fatigue, 2-33, 3-23
  Grid Decks, 3-13
  H piles, 3-84
  Painting, 2-33, D-1-15
  Section Loss, 2-33
  Stud Shear Connectors, 3-28, A-5
  Superstructure, 2-13-17, 3-6, 3-29, A-1-4
  Weathering, 3-28-29, 3-48, A-1-4, D-1-2
Steel Bridge Rehabilitation,
  Cracks, 2-32-35

Fatigue, 2-33, 3-23
Painting, 2-33, D-1-15
Section Loss, 2-33
Stiffeners, 3-17-22
Auxiliary, 3-21-22
Bearing, 3-17, 3-19
Diaphragm Connection Plates, 3-17-19
Longitudinal, 3-21
Transverse, 3-17-18, 3-20
Strands, 3-32
Structural Steel, 3-6, 7-2
Bolted Connections, 3-26
Coatings, 2-33, D-1-15
Composite Construction, 3-27
Design Guidelines, 3-16
Details, 3-18-20, 3-22, 3-28, 4-18-20
Erection Requirements, 3-23, A-7
Fatigue, 2-33, 3-23
Flange Plates, 3-21
Fracture Critical, 3-23
General Guidelines, 3-28
Grade, 3-6, 3-15-16, A-1
Shear Connectors, 3-28, A-5
Steel Curved Girder Bridges, 3-29
Toughness, 3-15
Web Plates, 3-16-21
Welded Connections, 3-25
Structural System Selection, 2-12
Structure(s),
Borings, 2-11
Buried, 2-29
Concrete, 2-18, 3-31-45
Pedestrian, 2-29
Steel, 2-13-17, 2-35, 3-6, 3-14-30, 3-97-103, A-1-3, D-1-15
Timber, 2-29, 2-38, 3-14, 3-45, 3-46-47, 7-3
Submissions,
Design Report, 2-47
Final Detail Plans, 2-51
Geotechnical Report, 2-51, 3-83-84
Pre-Span Arrangement Meeting, 2-47-48
PS&E (Plans, Specifications and Estimates), 2-51-53
Span Arrangement Study, 2-48-49
Tracings, 2-53
TS&L (Type, Size and Location), 2-51
Submittal Checklist,
Electronic Data, 4-2
Superstructure, 2-13-22, 3-6-7, 3-14-47, 4-17-20
Supplemental Specifications, 2-52, 4-7-8, 7-1, A-1

T

Temporary, 3-25, 3-44, 3-77, 4-9, 4-12, 4-13, 4-14, 4-24, 4-25, 4-32
Bracing, 3-25, 3-62
Structure, 3-111
Wall, 3-77
Tied Arch, 2-17
Timber Structures, 2-29
Rehabilitation, 2-38
Title Block, 4-2, 7-1
Tracings, 2-53
Trusses, 2-17
TS&L (Type, Size and Location), 2-51
Typical Deck Transverse Section, 2-1

U

V

Vendor Supplied Products, 2-27-28

W

Walls,
Cantilever, 3-71
Crash, 2-44-46
Gravity, 3-71
MSE, 2-23, 3-74-77, A-6
Pile, 3-74
Proprietary, 3-74
Retaining, 2-11, 3-69-81, 4-28-32, A-6
Tie-Back, 3-72
Web, 2-16, 3-16-21, 3-43-44
Welded, 3-25
Connection, 2-32, 3-25
Details, 2-33

Stud Shear Connectors, 3-28, A-5
Welding, 2-32, 3-23, 3-25-26, A-4-5
Widening, 2-31
Wingwalls, 2-23, 3-59-60, 3-68, 4-15
Working Stress Design, 3-1
WSPRO, 6-1