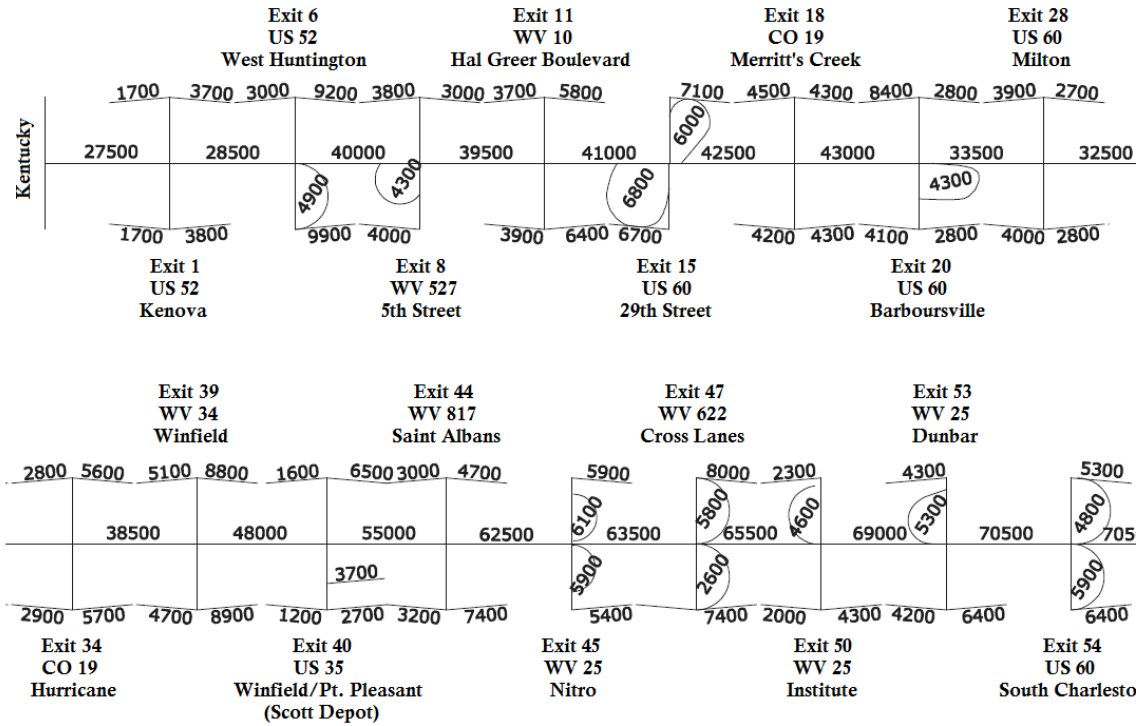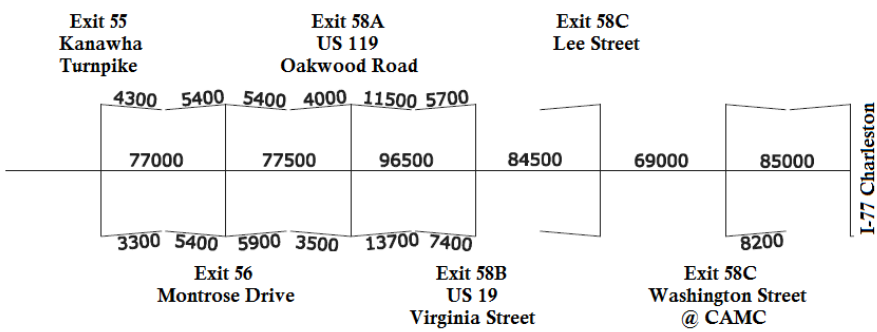I-64 Kentucky State Line to Charleston (I-77)