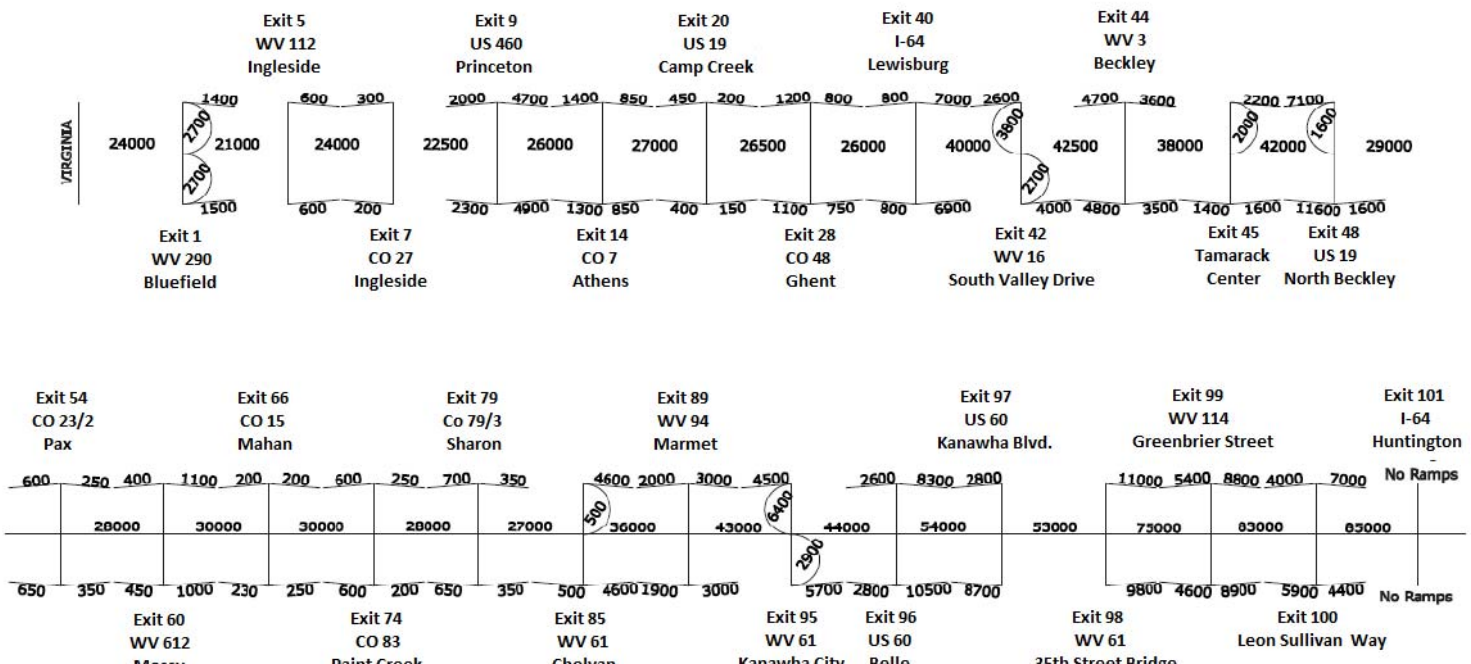I-77 Virginia State Line to I-64 Charleston