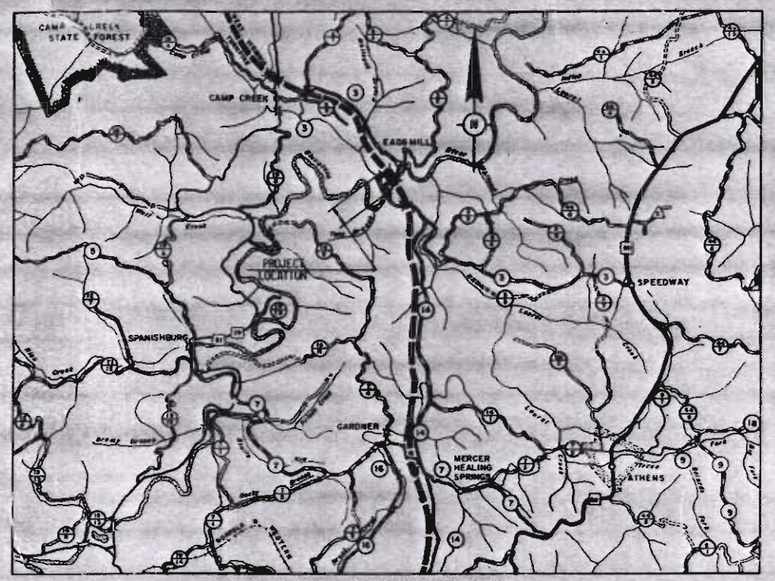

SCALE: 1 INCH = 1 MILE TRACED FROM COUNTY MAP

WEST VIRGINIA
DEPARTMENT OF HIGHWAYS

PLANS FOR CONSTRUCTION
OF
STATE HIGHWAY

PROJECT NO. I-77-2(54) 9, C-3
ROUTE NO. F.A.I. 77

JUMPING BRANCH & PLYMOUTH DISTRICTS

	ROADWAY	STRU
STA. 496+22.08 TO STA. 496+50.00	27.92'	
STA. 496+50.00 TO STA. 511+55.00		
STA. 511+55.00 TO STA. 511+79.91	24.91'	
TOTALS =	52.83'	

I-77 OVER BLUESTONE RIVE
BRIDGE NO. 3010

THIS PROJECT IS A FULLY CONTROLLED ACCESS FACILITY (FREEWAY)

As

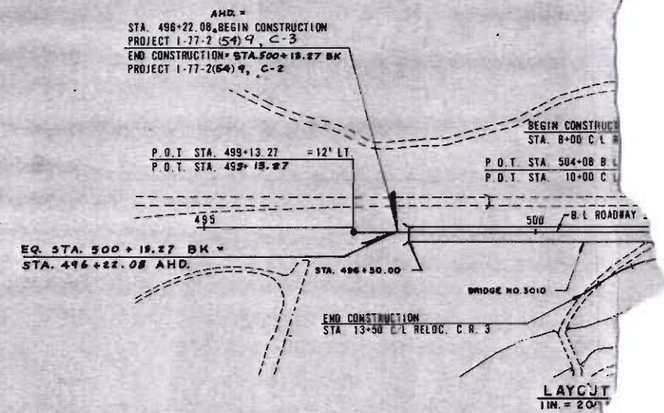

LAYOUT
1 IN. = 20'

CONVENTIONAL SIGNS

- State Line
- County Line
- Corporation Line
- Proposed R/W Line
- Property Line
- Existing Fence
- Proposed Fence
- Edge of Stream
- Proposed Guard Rail
- Existing Guard Rail
- Railroad
- Gas Line
- Water Line
- Telephone Line
- Electric Line
- Telephone Pole
- Power Pole
- Combined Power and Telephone Pole
- Tree
- Shrub
- Right of Way Marker

DESIGN DESIGNATION

A.D.T. (1977)	=	10,400
A.D.T. (1997)	=	17,910
D.H.V.	=	1,791
D	=	55%
T	=	10%
V	=	60 MPH

INDEX TO SHEETS

NO.	DESCRIPTION	NO.	DESCRIPTION	NO.
C1	TITLE SHEET	C23	CONCRETE DECK DETAILS - BEAM SPANS A & B	C[illegible]
C2	SITUATION PLAN	C24	DECK ELEVATIONS - BEAM SPANS A & B	C[illegible]
C3	SUMMARY OF QUANTITIES	C25	FRAMING & GEOMETRY - SIMPLE TRUSS SPAN	C[illegible]
C4	GENERAL NOTES I	C26	STRESS SHEET AND LOADING DATA - SIMPLE TRUSS SPAN	C[illegible]
C5	GENERAL NOTES II	C27	FRAMING PLAN & DETAILS - SIMPLE TRUSS SPAN	C[illegible]
C6	GENERAL PLAN AND ELEVATION - SUBSTRUCTURE	C28	CONCRETE DECK DETAILS - SIMPLE TRUSS SPAN	C51
C7	FOUNDATION PLAN	C29	SIMPLE TRUSS SPAN - BEARINGS	C51
C8	SOUTH ABUTMENT	C30	DECK ELEVATIONS - SIMPLE TRUSS SPAN	C52
C9	GRADING PLAN AT SOUTH ABUTMENT AND PIER NO. 1	C31	SIMPLE TRUSS SPAN - JOINT DETAILS I	C53
C10	NORTH ABUTMENT	C32	SIMPLE TRUSS SPAN - JOINT DETAILS II	C54
C11	GRADING PLAN AT NORTH ABUTMENT AND PIER NO. 5	C33	SIMPLE TRUSS SPAN - JOINT DETAILS III	C55
C12	PIER 1	C34	FRAMING & P.P. ELEV. - CONTINUOUS TRUSS SPANS	C56
C13	PIER 2	C35	GEOMETRIC DATA - CONTINUOUS TRUSS SPANS	C57
C14	PIER 3	C36	LOADING DATA - CONTINUOUS TRUSS SPANS	C58
C15	PIER 4	C37	CONTINUOUS TRUSS SPANS - STRESS DATA I	C59
C16	PIER 5	C38	CONTINUOUS TRUSS SPANS - STRESS DATA II	C60
C17	APPROACH SLAB DETAILS	C39	FRAMING PLAN & DETAILS - CONTINUOUS TRUSS SPANS	C61
C18	END POST DETAILS	C40	MISC. DETAILS - FLOOR SYSTEM & EXPANSION DAMS	C62
C19	MISCELLANEOUS DETAILS	C41	CONCRETE DECK DETAILS - CONTINUOUS TRUSS SPANS	C63-65
C20	GENERAL PLAN AND ELEVATION - SUPERSTRUCTURE	C42	DECK ELEVATIONS - CONTINUOUS TRUSS SPANS	C66-77
C21	FRAMING PLAN & DETAILS - SIMPLE BEAM SPAN A	C43	CONTINUOUS TRUSS SPANS - JOINT DETAILS I	C78
C22	FRAMING PLAN & DETAILS - SIMPLE BEAM SPAN B	C44	CONTINUOUS TRUSS SPANS - JOINT DETAILS II	C79-86

PROJECT NO. I-77-2 (54)9, C-3

Note: The project number should read: I-77-2(54)9, C-3, on all sheets.

ROADS DIV.	DIST. NO.	STATE PROJ. NO.	FEDERAL PROJ. NO.	FISCAL YEAR	COUNTY	SHEET NO.	TOTAL SHEETS
W. VA.	10	328-77-17.42	I-77 206(17)	-	MERCER	C2	96

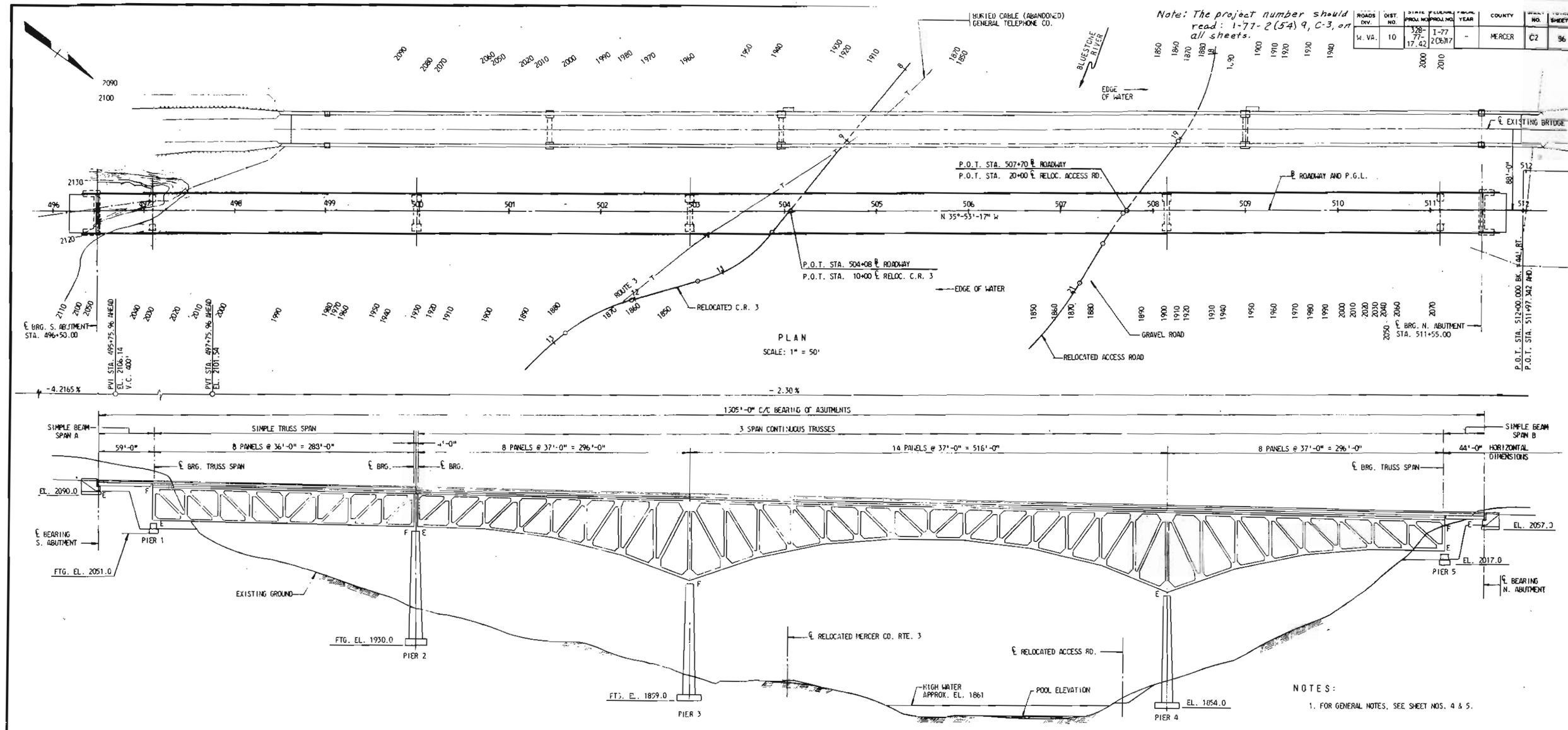

NOTES:

1. FOR GENERAL NOTES, SEE SHEET NOS. 4 & 5.

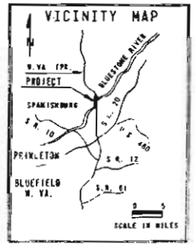

NO.	SHEET	DESCRIPTION	DATE	BY

REVISIONS

WEST VIRGINIA DEPARTMENT OF HIGHWAYS
CHARLESTON, WEST VIRGINIA
INTERSTATE ROUTE NO. 77

I-77 OVER BLUESTONE RIVER
BRIDGE NO. 3010
SITUATION PLAN

DESIGNED BY: H.Y.
DRAWN BY: C.A.E.
CHECKED BY: H.A. - J.A.L.

GREINER ENGINEERING SCIENCES
CONSULTING ENGINEERS
BALTIMORE, MARYLAND
CHARLESTON, WEST VIRGINIA

PUBLIC ROADS DIV.	STATE DIST. NO.	STATE PROJ. NO.	FEDERAL PROJ. NO.	FISCAL YEAR	COUNTY	SHEET NO.	TOTAL SHEETS
W.VA.	10	328-77-17.42	I-77 (06)17		MERCER	C3	86

BRIDGE PROPOSAL ITEMS

ITEM	DESCRIPTION	UNIT	QUANTITY	AS CONSTRUCTED
204-1	MOBILIZATION	L.S.	L.S.	
207-1	UNCLASSIFIED EXCAVATION	C.Y.	35,542	
212-1	STRUCTURE EXCAVATION	C.Y.	2,028	
212-5	SELECT MATERIAL FOR BACKFILLING	C.Y.	328	
307-2	CLASS 2 AGGREGATE BASE COURSE	C.Y.	36	
502-1	14 1/2" PORTLAND CEMENT CONCRETE APPROACH SLAB	S.Y.	213	
601-2	CLASS B CONCRETE	C.Y.	1	
601-4	CLASS B CONCRETE FOR SUBSTRUCTURE	C.Y.	6,493	
601-7	FIELD LABORATORY	L.S.	L.S.	
601-8	CONCRETE BRIDGE DECK	S.F.	67,020	
601-9	CONCRETE BRIDGE PARAPET	L.F.	3,007	
602-1	REINFORCING STEEL BARS	LB.	1,556,390	
602-1(E)	EPOXY COATED REINFORCING STEEL BARS	LB.	354,415	
606-22	CRUSHED STONE, CRUSHED GRAVEL, OR SILICA SAND FOR UNDERDRAINS	C.Y.	77	
606-25	6" UNDERDRAIN PIPE	L.F.	174	
615-1	STEEL SUPERSTRUCTURE	L.S.	L.S.	
638-1	PROJECT MARKERS	EA.	2	
639-1	CONSTRUCTION LAYOUT STAKES	L.S.	L.S.	
640-1	STANDARD FIELD OFFICE AND STORAGE BUILDING	L.S.	L.S.	
640-3	BUILDING EQUIPMENT	L.S.	L.S.	
624-13	MODULAR EXPANSION DEVICE D-780	L.F.	88	
624-13	MODULAR EXPANSION DEVICE D-1560	L.F.	44	
624-13	MODULAR EXPANSION DEVICE SA-400	L.F.	220	

ROADWAY PROPOSAL ITEMS

ITEM	DESCRIPTION	UNIT	QUANTITY	AS CONSTRUCTED
201-1	CLEARING AND GRUBBING	L.S.	L.S.	
207-1	UNCLASSIFIED EXCAVATION	C.Y.	15,581	
211-2	ROCK BORROW EXCAVATION	C.Y.	13,553	
307-2	CLASS 2 AGGREGATE BASE COURSE	C.Y.	572	
604-9 (18")	FULL BITUMINOUS COATED AND PAVED INVERT CORRUGATED IRON OR STEEL PIPE, 0.064" THICKNESS	L.F.	120	
604-14 (18")	END SECTION FOR CORRUGATED IRON OR STEEL PIPE	EA.	3	
605-9	TYPE G INLET	EA.	3	
607-1(I)	TYPE 1 GUARDRAIL	L.F.	75	
607-1(III)	TYPE 1 GUARDRAIL	L.F.	1,100	
607-23	GUARDRAIL END ANCHOR	EA.	4	
608-2 (47")	RIGHT-OF-WAY FENCE, FARM FIELD TYPE	L.F.	100	
636A-1	MAINTENANCE OF TRAFFIC	L.S.	L.S.	
636-4	CALCIUM CHLORIDE FOR DUST PALLIATIVE	TON	10	
637-1	WATER FOR DUST PALLIATIVE	M. GAL.	100	
638-2	RIGHT OF WAY MARKERS	EA.	4	
639-1	CONSTRUCTION LAYOUT STAKES	L.S.	L.S.	
	EROSION CONTROL			
633-3	DUMPED ROCK GUTTER	C.Y.	145	
642-4-1	TEMPORARY SEED	LB.	51	
642-4-3	SEED MIXTURE D	LB.	51	
642-5-1	STRAW OR HAY MULCH	TON	2	
642-6	FERTILIZER	TON	1	
642-11	HAY OR STRAW BALES	EA.	100	
652-1	AGRICULTURAL LIMESTONE	TON	1	
652-2-1	FERTILIZER, 10-20-10	TON	1	
652-2-2	UREA FORMALDEHYDE FERTILIZER	TON	1	
652-3-2	SEED MIXTURES D	LB.	51	
652-4-1	STRAW OR HAY MULCH	TON	2	
655-1	MATTING	S.Y.	47	

NOTES:

1. FOR GENERAL NOTES, SEE SHEET NOS. C4 & C5

NO.	SHEET	DESCRIPTION	DATE	BY

REVISIONS

WEST VIRGINIA DEPARTMENT OF HIGHWAYS
CHARLESTON, WEST VIRGINIA
INTERSTATE ROUTE NO. 77

I-77 OVER BLUESTONE RIVER
BRIDGE NO. 3010
SUMMARY OF QUANTITIES

DESIGNED BY: W.R.L.
DRAWN BY: L.H.
CHECKED BY: E.P.F./J.M.M.

GREINER ENGINEERING SCIENCES, INC.
CONSULTING ENGINEERS
BALTIMORE, MARYLAND
CHARLESTON, WEST VIRGINIA

DATE: NOV. 1975
SCALE: NONE
SHEET C3

PUBLIC ROADS DIV.	STATE DIST. NO.	STATE PROJ. NO.	FEDERAL PROJ. NO.	FISCAL YEAR	COUNTY	SHEET NO.	TOTAL SHEETS
W. VA.	10	328-77 17.42	I-77 2(36)17		MERCER	C4	86

GENERAL NOTES

GOVERNING SPECIFICATIONS

WEST VIRGINIA DEPARTMENT OF HIGHWAYS, STANDARD SPECIFICATIONS, ROADS AND BRIDGES, ADOPTED 1972 AS AMENDED BY THE SUPPLEMENTAL SPECIFICATIONS DATED JULY 1, 1976, THE CONTRACT DOCUMENTS AND THE CONTRACT PLANS.

DESIGN

THE BRIDGE IS DESIGNED FOR HS 20-44 LIVE LOADING OR TWO 24,000 POUND AXLES SPACED 4'-0" APART. THE DESIGN IS IN ACCORDANCE WITH THE 1973 A.A.S.H.T.O. SPECIFICATIONS FOR HIGHWAY BRIDGES AND THE A.A.S.H.T.O. INTERIM SPECIFICATIONS, BRIDGES, 1974.

THE DEAD LOAD INCLUDES A WEIGHT OF 25 LBS. PER SQ. FT. FOR A FUTURE WEARING SURFACE. THE FUTURE WEARING SURFACE IS NOT INCLUDED IN THIS CONTRACT.

DESIGN UNIT STRESSES

CLASS "B" CONCRETE:	F'C	=	3,000 P.S.I.
	FC	=	1,200 P.S.I.
	N	=	10
REINFORCING STEEL:	FS	=	20,000 P.S.I.
STRUCTURAL STEEL (A-36):	FS	=	20,000 P.S.I.
(A-588):	FS	=	27,000 P.S.I.

CONCRETE

ALL CONCRETE SHALL BE CLASS "B" AIR ENTRAINED.

PIERS AND ABUTMENTS SHALL RECEIVE A CLASS 1 FINISH, SECTION 601.3.9.1. COST TO BE INCLUDED IN ITEM 604-4.

INSIDE AND OUTSIDE SURFACES OF PARAPETS AND WINGWALLS ABOVE GRADE SHALL RECEIVE A CONCRETE SURFACE FINISH IN ACCORDANCE WITH SECTION 601.3.9.2 AS AMENDED BY THE SPECIAL PROVISIONS. COST TO BE INCLUDED IN ITEM 601-9.

CHAMFER ALL EXPOSED EDGES OF CONCRETE 3/4" x 3/4" UNLESS OTHERWISE NOTED.

CONCRETE SHALL BE CURED IN ACCORDANCE WITH SECTION 601.3.10 OF THE STANDARD SPECIFICATIONS. POLYETHYLENE COATED BURLAP SHALL CONFORM TO SECTION 707.5 OF THE STANDARD SPECIFICATIONS.

A WATER REDUCING RETARDING ADMIXTURE, IN ACCORDANCE WITH THE SPECIAL PROVISIONS, SHALL BE USED IN ALL SUPERSTRUCTURE CONCRETE. PAYMENT SHALL BE INCLUDED IN ITEMS 601-8 AND 601-9 "CLASS "B" CONCRETE FOR SUPERSTRUCTURE". RETARDER WILL NOT BE REQUIRED WHEN THE TEMPERATURE IS BELOW 50°F. THE CONTRACTOR'S ATTENTION IS CALLED TO THE TEST REQUIREMENTS FOR THE RETARDER ADMIXTURE.

REINFORCING BARS

ALL REINFORCING STEEL BARS SHALL BE IN ACCORDANCE WITH A.S.T.M. A-615 GRADE 40 OR GRADE 60. A.S.T.M. A-616 GRADE 50 BARS MAY BE USED IN THE SUBSTRUCTURE CONCRETE AND, IF USED, SHALL MEET THE BEND TEST REQUIREMENTS OF A-615 GRADE 60.

THE CLEAR DISTANCE BETWEEN REINFORCING STEEL AND THE FACE OF CONCRETE SHALL BE AS FOLLOWS, UNLESS OTHERWISE SHOWN ON THE DRAWINGS:

TOP OF SLAB	2"	CAPS & COLUMNS	3"
BOTTTOM OF SLAB	1"	FOOTINGS	4"
ALL OTHER LOCATIONS	2"		

LENGTH OF LAP FOR REINFORCING BARS AND THE LENGTH OF BAR PROJECTION AT CONSTRUCTION JOINTS SHALL BE IN ACCORDANCE WITH A.A.S.H.T.O. INTERIM SPECIFICATIONS, BRIDGES, 1974.

JOINT FILLER

JOINT FILLER FOR VERTICAL JOINTS BETWEEN THE APPROACH SLAB AND THE ABUTMENT AND WINGWALLS, SHALL BE PREFORMED EXPANSION JOINT FILLER CONFORMING TO ARTICLE 708.1.2. THE COST OF THE FILLERS SHALL BE INCLUDED IN ITEM 502-1, "PORTLAND CEMENT CONCRETE APPROACH SLAB".

PREFORMED JOINT FILLER FOR VERTICAL JOINT IN SUPERSTRUCTURE SHALL BE SPONGE RUBBER TYPE 1 CONFORMING TO ARTICLE 708.1. THE COST OF THE FILLER SHALL BE INCLUDED IN ITEM 601-3 "CLASS "B" CONCRETE IN SUPERSTRUCTURE".

EXCAVATION

NO EXCAVATION SHALL BE CLASSIFIED AS ROCK EXCAVATION OR WET EXCAVATION. ROCK SHALL BE EXCAVATED UNTIL A LEVEL SURFACE IS PROVIDED WITH THE FOOTING KEYED INTO HARD ROCK. EXCEPT FOR THAT PORTION OF THE FOOTING EXTENDING ABOVE THE ROCK SURFACE, THE CONCRETE SHALL BE POURED AGAINST THE ROCK WITHOUT THE USE OF FORMS. THE COST OF ANY BRACING, SHORING, OR DEWATERING REQUIRED SHALL BE INCLUDED IN STRUCTURE EXCAVATION.

ROCK CUT AT PIERS AND ABUTMENTS

ROCK CUT PLANS FOR THE EXCAVATIONS AT PIERS 1 TO 5 AND THE NORTH AND SOUTH ABUTMENTS SHALL CONFORM TO THE WEST VIRGINIA DEPARTMENT OF HIGHWAYS "GUIDE FOR DESIGN IN CUT SECTIONS THROUGH ROCK", DRAWING NO. 7 AS PUBLISHED IN "SPECIFICATIONS FOR SUBSURFACE INVESTIGATION", SEPTEMBER 1962, AND SHALL BE SUBMITTED TO THE ENGINEER FOR REVIEW AND APPROVAL.

REVIEW OF THE CONTRACTOR'S SUPPORT OF EXCAVATION AND ROCK CUT PLANS, METHODS, AND PROCEDURES SHALL NOT BE CONSTRUED TO RELIEVE THE CONTRACTOR IN ANY WAY OF HIS RESPONSIBILITY. ALL RISKS ARE ASSUMED SOLELY BY THE CONTRACTOR. THE ENGINEER HAS NO RESPONSIBILITY THEREFOR.

BACKFILLING

THE CONTRACTOR SHALL BACKFILL THE EXCAVATIONS AT PIERS 2, 3 AND 4 IN ACCORDANCE WITH THE PIER EXCAVATION DETAILS AS SOON AS POSSIBLE AND SLOPE THE SURFACES TO DRAIN. BACKFILL MATERIAL TO CONFORM TO THE REQUIREMENTS FOR SELECT EMBANKMENT.

VIBRATIONS BY BLASTING

THE CONTRACTOR SHALL COMPLY WITH THIS SPECIFICATION CONCERNING PRODUCTION OF VIBRATIONS BY BLASTING.

1. THE CONTRACTOR SHALL RETAIN AN EXPERIENCED AND QUALIFIED SEISMOLOGIST, ACCEPTABLE TO THE ENGINEER, WHO SHALL PREPARE A REPORT FOR SUBMISSION TO THE ENGINEER STATING A RECOMMENDED BLASTING PROCEDURE INCLUDING SIZE OF CHARGE, DEPTH OF HOLES, NUMBER OF HOLES FIRED AT ONE TIME, BLASTING SEQUENCE, AND LIMITING PARTICLE VELOCITY TO PROTECT THE EXISTING STRUCTURE AND COMPLETED AND PARTIALLY COMPLETED PORTIONS OF THE NEW STRUCTURE.

2. THE SEISMOLOGIST SHALL MONITOR VIBRATIONS AT THE EXISTING STRUCTURE, TOGETHER WITH COMPLETED AND PARTIALLY COMPLETED UNITS OF THE NEW STRUCTURE TO PRECLUDE DAMAGING EFFECTS AND MAINTAIN CONSTANT CLOSE CONTROL OVER LOADING AND DETONATION SEQUENCES. SUCH RECORDS WILL BE MADE AVAILABLE TO THE ENGINEER AT HIS REQUEST.

3. PRIOR TO COMMENCING ANY CONSTRUCTION ACTIVITY, A COMPLETE STENOGRAPHIC AND PHOTOGRAPHIC RECORD OF THE PRESENT CONDITION OF THE EXISTING STRUCTURE SHALL BE PREPARED AND SUBMITTED TO THE ENGINEER.

4. THE CONTRACTOR SHALL INFORM THE PUBLIC OF THE NATURE OF THE BLASTING TO BE ACCOMPLISHED AND THE NATURE AND CONTENT OF VIBRATIONS LIKELY TO RESULT.

5. NO BLASTING WILL BE DONE BEFORE 8:00 A.M. OR AFTER 8:00 P.M.

6. THE THROW OF ROCK FRAGMENTS WILL BE CONTROLLED SO THAT NO PIECES FALL OUTSIDE THE RIGHT-OF-WAY LIMITS.

7. A BLAST SHALL BE DEFINED AS PREDETERMINED NUMBER OF SHOTS. A PERIOD OF AT LEAST TEN (10) MINUTES SHALL ELAPSE BETWEEN EACH BLAST AND MINIMUM DELAYED TIME OF 100 MILISECONDS SHALL ELAPSE BETWEEN EACH INDIVIDUAL SHOT WITHIN A BLAST. THE INTERVAL BETWEEN INDIVIDUAL SHOTS MAY BE INCREASED OR DECREASED IF REQUESTED BY THE CONTRACTOR AND APPROVED BY THE ENGINEER. THE CONTRACTOR MUST, HOWEVER, REMAIN WITHIN THE VIBRATION LIMITS HEREINAFTER DESCRIBED.

8. THE MAXIMUM PEAK PARTICLE VELOCITY OF ANY BLAST WAVE MOTION PASSING THROUGH THE EARTH AT ANY AND ALL STRUCTURES SHALL BE 2.0 INCHES/SECOND OR LESS. HOWEVER, THIS MAXIMUM VELOCITY MAY BE DECREASED AS A RESULT OF THE SEISMIC INVESTIGATION OR AT THE DIRECTION OF THE ENGINEER IF UNFAVORABLE REACTIONS ARISE. THE MEASUREMENTS SHALL BE TAKEN ON THE GROUND ADJACENT TO AND/OR WITHIN THE STRUCTURES AS DESIGNATED BY THE ENGINEER.

9. THE CONTRACTOR SHALL PROVIDE ALL REQUIRED MONOTORING EQUIPMENT.

10. THE CONTRACTOR SHALL KEEP A WRITTEN RECORD OF BLASTING IN THE AREA TO INCLUDE DEPTH OF BLAST HOLE, POUNDS OF EXPLOSIVE PER DELAY, TYPE OF EXPLOSIVE AND THE NUMBER OF DELAYS PER BLAST. THIS RECORD SHALL BE MADE AVAILABLE TO THE ENGINEER.

11. THE CONTRACTOR SHALL PROVIDE FOR COMMUNICATION BETWEEN THE BLASTING FOREMEN AND THE ENGINEER SUCH THAT VERBAL CONTACT CAN BE MADE WITHIN THE SPECIFIED TEN (10) MINUTES INTERVAL BETWEEN BLASTS. THE INTERVAL BETWEEN BLASTS MAY BE DECREASED AT THE DISCRETION OF THE ENGINEER.

SUPPORT OF EXCAVATION

THE CONTRACTOR SHALL SUBMIT TO THE ENGINEER WORKING DRAWINGS PREPARED BY A REGISTERED PROFESSIONAL ENGINEER SHOWING THE METHOD, STAGING AND NECESSARY DETAILS, INCLUDING COMPUTATIONS FOR THE TEMPORARY SUPPORT OF THE OVERBURDEN DURING THE CONSTRUCTION OF PIERS 2, 3 AND 4.

2 Delete

BRIDGE SEATS

ANCHOR BOLTS SHALL BE SET AS SHOWN ON THE DRAWINGS.

BEARING AREAS ON ABUTMENTS AND PIERS UPON WHICH SHOES WILL BE SET SHALL BE FINISHED TO TRUE ELEVATIONS AND PLANES.

APPROACH SLAB BASE COURSE

THE 6" BASE COURSE MATERIAL UNDER THE APPROACH SLAB SHALL BE ITEM 307-2 CLASS 2 AGGREGATE BASE COURSE.

3 Connections
The Connections shall be drilled
To The exact cambered Angles

1 Rock Cut At Piers and Abuts.
Rock Cut Plans for The excavation at
Piers 1 & 5 and The North & south abuts
Shall Conform To The Plans detailed Herein
and Shall be submitted To The engineer for
Review and approval

NO.	SHEET	DESCRIPTION	DATE	BY
1		Rock Cut At Piers & Abut	11-29-76	JLD
2		Delete Support of Excav	11-4-76	JLD
3		Connection Note	11-4-76	JLD.

REVISIONS

WEST VIRGINIA DEPARTMENT OF HIGHWAYS
CHARLESTON, WEST VIRGINIA
INTERSTATE ROUTE NO. 77

I-77 OVER BLUESTONE RIVER
BRIDGE NO. 3010
GENERAL NOTES I

DESIGNED BY: J.M.M.
DRAWN BY: E.V.V.
CHECKED BY:

GREINER ENGINEERING SCIENCES, INC.
CONSULTING ENGINEERS
BALTIMORE, MARYLAND
CHARLESTON, WEST VIRGINIA

DATE: NOV. 1975
SCALE:
SHEET C4

PUBLIC ROADS DIV.	STATE DIST. NO.	STATE PROJ. NO.	FEDERAL PROJ. NO.	FISCAL YEAR	COUNTY	SHEET NO.	TOTAL SHEETS
W. VA.	10	328-77-17.42	I-77 2036017		MERCER	C5	86

GENERAL NOTES (CONT'D.)

STRUCTURAL STEEL

ALL STRUCTURAL STEEL EXCEPT THE SHEAR PLATES SHALL CONFORM TO A.S.T.M. A-588 WEATHERING STEEL. THE SHEAR PLATES SHALL CONFORM TO A.S.T.M. A-36.

THE STRUCTURAL STEEL FOR THE ENTIRE BRIDGE WILL BE UNPAINTED AND WILL BE ALLOWED TO WEATHER.

THE WEATHERING STEEL WILL REQUIRE A COMMERCIAL BLAST CLEANED SURFACE BEFORE FABRICATION. THE APPEARANCE OF THE SURFACE AFTER BLAST CLEANING SHALL MEET PICTORIAL STANDARD B Sa 2, C Sa 2 OR D Sa 2 OF SSPC-VIS 1.

THE REQUIREMENT OF SECTION 615.3.4.4, THE FIRST PARAGRAPH OF THE SUPPLEMENTAL SPECIFICATION IS DELETED. AFTER THE COMPLETION OF THE STRUCTURAL STEEL ERECTION AND THE PLACING OF THE SUPERSTRUCTURE CONCRETE, THE CONTRACTOR WILL BY SUITABLE METHODS CLEAN THE STRUCTURAL STEEL OF ALL FOREIGN SUBSTANCES TO PRESERVE THE COLOR OF THE COMPLETED STRUCTURE.

THE FOLLOWING SUPPLEMENTARY REQUIREMENTS PERTAINING TO IMPACT PROPERTIES SHALL BE ADDED TO A.S.T.M. DESIGNATION A-588:

IMPACT PROPERTIES

THE PRODUCER SHALL MAKE AND REPORT TO THE CUSTOMER, FOR HEAT QUALIFICATION, ONE IMPACT TEST FROM THE THICKEST MATERIAL AND ONE IMPACT TEST FROM THE THINNEST MATERIAL FOR EACH HEAT AND/OR PRODUCT FURNISHED. THE IMPACT TEST SHALL BE LONGITUDINAL CHARPY V-NOTCH CONFORMING TO THE REQUIREMENTS OF A.S.T.M. A-370, PARAGRAPH 23. PRODUCTS ARE DEFINED AS PLATES, SHAPES AND BARS. IF LESS THAN 50 TONS OF A PRODUCT ARE SUPPLIED FROM A HEAT, ONE IMPACT TEST FROM THE THICKEST MATERIAL ONLY IS REQUIRED FOR THAT HEAT.

FOR A HEAT TO QUALIFY THE AVERAGE ENERGY ABSORBED AT 40 DEGREES F. ON THE TEST SPECIMENS SHALL NOT BE LESS THAN 15 FOOT POUNDS, EXCEPT WHEN SUB-SIZE SPECIMENS ARE REQUIRED; THEN THE MINIMUM AVERAGE ENERGY ABSORPTION ON THE TEST SPECIMENS SHALL BE AS FOLLOWS:

SIZE	FOOT POUNDS (MIN.)
10 mm x 7.5 mm	12.0
10 mm x 5 mm	8.0

EACH IMPACT TEST CONSTITUTES THE AVERAGE VALUE OF THREE ADJACENT SPECIMENS. THE RESULTS ON A SINGLE SPECIMEN MAY BE BELOW THE ABOVE SPECIFIED MINIMUM VALUES BUT IN NO CASE BELOW TWO-THIRDS OF THE VALUE. IF MORE THAN ONE VALUE IS BELOW THE SPECIFIED MINIMUM, OR IF ONE SPECIMEN IS BELOW TWO-THIRDS OF THE SPECIFIED MINIMUM, A RETEST OF THREE ADDITIONAL SPECIMENS SHALL BE MADE, EACH OF WHICH MUST EQUAL OR EXCEED THE SPECIFIED MINIMUM. IF THE THICKEST OR THINNEST MATERIAL TESTED FAILS TO QUALIFY, THAT THICKNESS OR THOSE THICKNESSES SHALL BE REJECTED. HOWEVER, THE NEXT THINNER OR THICKER MATERIAL TO BE FURNISHED MAY BE TESTED AND IF THE TEST RESULTS MEET THE REQUIREMENTS, THE HEAT WILL BE CONSIDERED QUALIFIED FOR THOSE THICKNESSES REPRESENTED BY THE RETEST.

THE GOVERNING THICKNESS FOR BEAMS, TEES AND CHANNELS SHALL BE THE AVERAGE FLANGE THICKNESS. THE GOVERNING THICKNESS FOR ANGLES SHALL BE THE SPECIFIED LEG THICKNESS. TEST SPECIMENS FOR THESE SECTIONS SHALL BE TAKEN AT A POINT ONE-THIRD THE DISTANCE FROM THE OUTER EDGE OF THE FLANGE OR LEG TO THE WEB OR HEEL OF THE SECTION.

THE FOLLOWING SPECIFICATIONS FOR "SHOP ASSEMBLING" TAKEN FROM THE WEST VIRGINIA, DEPARTMENT OF HIGHWAYS, STANDARD SPECIFICATIONS, ADOPTED 1972, SECTION 615.3.1.13.2 THRU SECTION 615.3.1.13.5 SHALL APPLY FOR THE TRUSSES ON THIS PROJECT.

THE PROGRESSIVE CHORD ASSEMBLY AS DESCRIBED IN THE STANDARD SPECIFICATIONS SHALL BE REQUIRED FOR THE TRUSSES ON THIS PROJECT UNLESS THE OPTIONAL METHOD OF NUMERICALLY CONTROLLED DRILLING WHICH IS DESCRIBED BELOW IS USED.

OPTIONAL NUMERICALLY CONTROLLED DRILLING

IN LIEU OF THE PROCEDURES OUTLINED IN THE SPECIFICATIONS FOR SUBPUNCHING, DRILLING AND REAMING BOLT HOLES, AND FOR SHOP ASSEMBLY, THE CONTRACTOR SHALL HAVE THE OPTION TO DRILL BOLT HOLES FULL-SIZE IN UNASSEMBLED PIECES AND/OR CONNECTIONS BY MEANS OF SUITABLE NUMERICALLY CONTROLLED DRILLING EQUIPMENT AS DESCRIBED IN THE SPECIAL PROVISIONS.

INSPECTION OF PLATE CUT EDGES AND PLATES FOR LAMINATIONS

THE VISUAL INSPECTION AND REPAIR OF PLATE CUT EDGES SHALL BE IN ACCORDANCE WITH A.A.S.H.T.O. STANDARD SPECIFICATIONS FOR HIGHWAY BRIDGES 1973, ARTICLE 2.10.22.

ULTRASONIC TESTING FOR PLATE LAMINATIONS OF PLATES 3/4" AND OVER IN THICKNESS USED FOR PRIMARY STRESS MEMBERS INCLUDING ALL TRUSS MEMBERS AND FLOORBEAMS SHALL BE PERFORMED BY THE CONTRACTOR'S AGENT IN THE PRESENCE OF THE DEPARTMENT'S REPRESENTATIVE.

THE TESTING SHALL BE PERFORMED IN ACCORDANCE WITH THE FOLLOWING:

A. TRANSDUCER - 1" DIA. 2.25 M/H_Z

B. SCREEN PRESENTATION - THICKNESS OF MATERIAL BEING TESTED AT 8/10 LINEAL SCREEN DISTANCE, HEIGHT OF FIRST BACK ECHO AT 100% SCREEN HEIGHT.

C. COMPLETE LOSS OF BACK ECHO OR LAMINAR INDICATION WHICH EXCEEDS 100% SCREEN HEIGHT TO CONSTITUTE A LAMINATION.

D. SEARCH PATTERN - SHALL BE A "Z" SCAN WITH DIMENSIONS OF THE WIDTH OF THE PLATE BY EIGHT (8) FEET REPEATED ALONG FULL LENGTH OF THE PIECE BEGINNING WITH A TRANSVERSE LINE SIX (6) INCHES FROM ONE END, AND ENDING WITH A TRANSVERSE LINE SIX (6) INCHES FROM THE END.

ANY LAMINAR DISCONTINUITY GREATER THAN ONE (1) INCH IN WIDTH AND EIGHT (8) FEET IN LENGTH SHALL BE PLOTTED ON A DRAWING AND FORWARDED TO THE ENGINEER FOR FINAL EVALUATION. ANY OTHER LAMINAR DISCONTINUITIES OF A SERIOUS NATURE SHALL ALSO BE SENT TO THE ENGINEER FOR FINAL EVALUATION.

ALL ULTRASONIC TESTING FOR LAMINATIONS SHALL BE PERFORMED IN THE FABRICATING SHOP AFTER CUTTING PLATES BUT BEFORE ASSEMBLY.

ALL WELDING SHALL BE DONE IN ACCORDANCE WITH THE SUPPLEMENTAL SPECIFICATIONS. ALL GROOVE WELDS SHALL BE CONSIDERED AS CARRYING PRIMARY STRESS AND SHALL BE RADIOGRAPHED IN ACCORDANCE WITH THE SPECIFICATIONS. ULTRASONIC INSPECTION MAY BE SUBSTITUTED FOR RADIOGRAPHIC INSPECTION SUBJECT TO APPROVAL BY THE ENGINEER. THE ENDS OF ALL WELDED BOX MEMBERS SHALL HAVE END RETURN WELDS ON THE MEMBERS FOR A MINIMUM LENGTH OF 6 INCHES. GROOVE WELDS SHALL BE GROUND SMOOTH IN THE DIRECTION OF STRESS.

ALL SHOES AND BEARING BLOCKS SHALL BE STRESS RELIEVED AFTER WELDING IN ACCORDANCE WITH THE A.W.S. SPECIFICATIONS.

DRAIN PIPES SHALL BE MADE OF A-588 WEATHERING STEEL.

THE LUMP SUM BID FOR ITEM 615-1 STEEL SUPERSTRUCTURE, SHALL INCLUDE ALL STRUCTURAL STEEL, COMPLETE IN PLACE INCLUDING BEARING SHOES, PREFORMED FABRIC PADS, EXPANSION DEVICES, FLOOR DRAINS, DOWNSPOUTS AND ANCHOR BOLTS, BUT DOES NOT INCLUDE THE MODULAR EXPANSION DEVICES.

ALL DIMENSIONS SHOWN ARE FOR A NORMAL TEMPERATURE OF 68°F.

CONCRETE DECK

THE CONCRETE DECK SLAB SHALL BE FINISHED IN ACCORDANCE WITH THE SPECIFICATIONS. THE DEPARTMENT ENCOURAGES THE USE OF MECHANICAL PLACEMENT AND FINISHING OF BRIDGE DECKS. IF THE CONTRACTOR ELECTS TO USE SUCH EQUIPMENT HE SHALL MAKE ADVANCE WRITTEN APPLICATION TO THE ENGINEER, INCLUDING INFORMATION ON THE WEIGHT OF THE MACHINE, VOLUME OF CONCRETE TO BE PLACED PER POUR AND HIS PROPOSED PROCEDURE FOR PLACEMENT. FINAL FINISHING OPERATIONS, TESTING AND PENALTY FOR INACCURACY SHALL ALSO APPLY IN CASE OF MECHANICAL FLOOR FINISH.

GRATING

GRATING FOR INSPECTION WALKWAY SHALL BE BORDEN METAL PRODUCTS COMPANY, TYPE B; OR IRVING SUBWAY GRATING COMPANY, TYPE AA; OR APPROVED EQUAL. BEARING BARS SHALL BE 3/4 x 3/16 INCH SPACED AT 1 3/16 INCH CENTERS. ALL EDGES SHALL BE BANDED. THE GRATING SHALL BE MADE OF A-588 WEATHERING STEEL.

SHOP DRAWINGS

WORKING DRAWINGS SHALL BE DELIVERED TO THE DEPARTMENT UPON COMPLETION OF THE CONTRACT IN ACCORDANCE WITH SUBSECTION 105.2 OF THE SPECIFICATIONS.

DRAIN HOLES

2"Φ DRAIN HOLES SHALL BE PROVIDED AT THE LOW POINTS OF MEMBERS WHERE WATER MAY POCKET. MASTIC SHALL BE APPLIED TO THE MEMBER AT THE LOW POINTS SO THAT ALL WATER CAN DRAIN TO DRAIN HOLES OR MANHOLES.

DATUM

ALL ELEVATIONS ARE IN FEET AND ARE BASED ON U.S. COAST AND GEODETIC SURVEY MEAN SEA LEVEL DATUM, 1929 ADJUSTMENT.

RE BARS

THE INSPECTOR SHALL PICK RANDOM BARS FROM THE REINFORCING BAR LIST FOR THE TEST BARS. HE SHALL CUT 5.0' FROM THE BARS CHOSEN. RE BARS IN THE LIST SHALL BE SPLICED IN PLACE OF THE CUT BARS. RE BARS HAVE BEEN DETAILED TO ALLOW A FULL TENSION SPLICE AT EACH END. ONE RE BAR FOR EACH 10 TON OR FRACTION THEREOF OF EACH SIZE FOR SUBSTRUCTURE AND SUPERSTRUCTURE, HAVE BEEN INCLUDED IN THE BILL OF STEEL AND WILL BE PAID FOR UNDER ITEM 602-1. IN THE EVENT ALL BARS OF ANY ONE SIZE ARE NOT SENT IN ONE SHIPMENT, THE SUPPLIER SHALL FURNISH AT HIS EXPENSE, ONE FOR EACH 10 TONS OR FRACTION THEREOF FOR EACH SHIPMENT.

IN THE EVENT THAT ANY SHIPMENT OF MATERIAL HAS BEEN PRETESTED AND HAS BEEN IDENTIFIED IN ACCORDANCE WITH MATERIALS CONTROLS, SOIL AND TESTING DIVISION'S INFORMATIONAL MEMORANDUM #17 (1M-17), THE SHIPMENT MAY BE ACCEPTED WITHOUT FURTHER TESTING OR SAMPLING SUBJECT TO RECORD SAMPLING PROCEDURES.

PAINT

THE ROLLERS FOR THE EXPANSION SHOE AT PIER 4 AND THE PLATES IN THE EXPANSION JOINTS IN THE PARAPET SHALL BE PAINTED IN ACCORDANCE WITH SECTION 615. OF THE SPECIFICATIONS. THE FOLLOWING FROM SECTION 615.3.7.3 OF THESE SPECIFICATIONS SHALL APPLY:

SHOP PRIMER - SECTION 711.7; DRY FILM THICKNESS 1 1/2 MILS

FIELD PRIMER - SECTION 711.8; DRY FILM THICKNESS 1 1/2 MILS

FINISH COAT (ROLLERS) - SECTION 711.11; DRY FILM THICKNESS 2 MILS

THE COLOR OF THE FINISH COAT TO MATCH THE COLOR OF THE WEATHERING STEEL.

FINISH COAT (PLATES IN THE EXPANSION JOINTS IN PARAPET) - SECTION 711.9; DRY FILM THICKNESS 2 MILS.

TOTAL DRY FILM THICKNESS = 5 MILS.

BOLTS

ALL BOLTS SHALL CONFORM TO A.S.T.M. A-325 TYPE 3. UNLESS OTHERWISE NOTED ON THESE PLANS, BOLTS SHALL BE 7/8" DIAMETER.

SHOULDER BOLTS SHALL NOT BE TORQUED.

NO.	SHEET	DESCRIPTION	DATE	BY

REVISIONS

WEST VIRGINIA DEPARTMENT OF HIGHWAYS
CHARLESTON, WEST VIRGINIA
INTERSTATE ROUTE NO.77

I-77 OVER BLUESTONE RIVER
BRIDGE NO. 3010
GENERAL NOTES II

DESIGNED BY: J.M.M.
DRAWN BY: E.V.V.
CHECKED BY:

GREINER ENGINEERING SCIENCES, INC.
CONSULTING ENGINEERS
BALTIMORE, MARYLAND
CHARLESTON, WEST VIRGINIA

DATE: NOV. 1975
SCALE:
SHEET C5

PUBLIC ROADS DIV.	STATE DIST. NO.	STATE PROJ NO.	FEDERAL PROJ NO.	FISCAL YEAR	COUNTY	SHEET NO.	TOTAL SHEETS
W. VA.	10	328-77-17.42	I-77 203-317		MERCER	C6	86

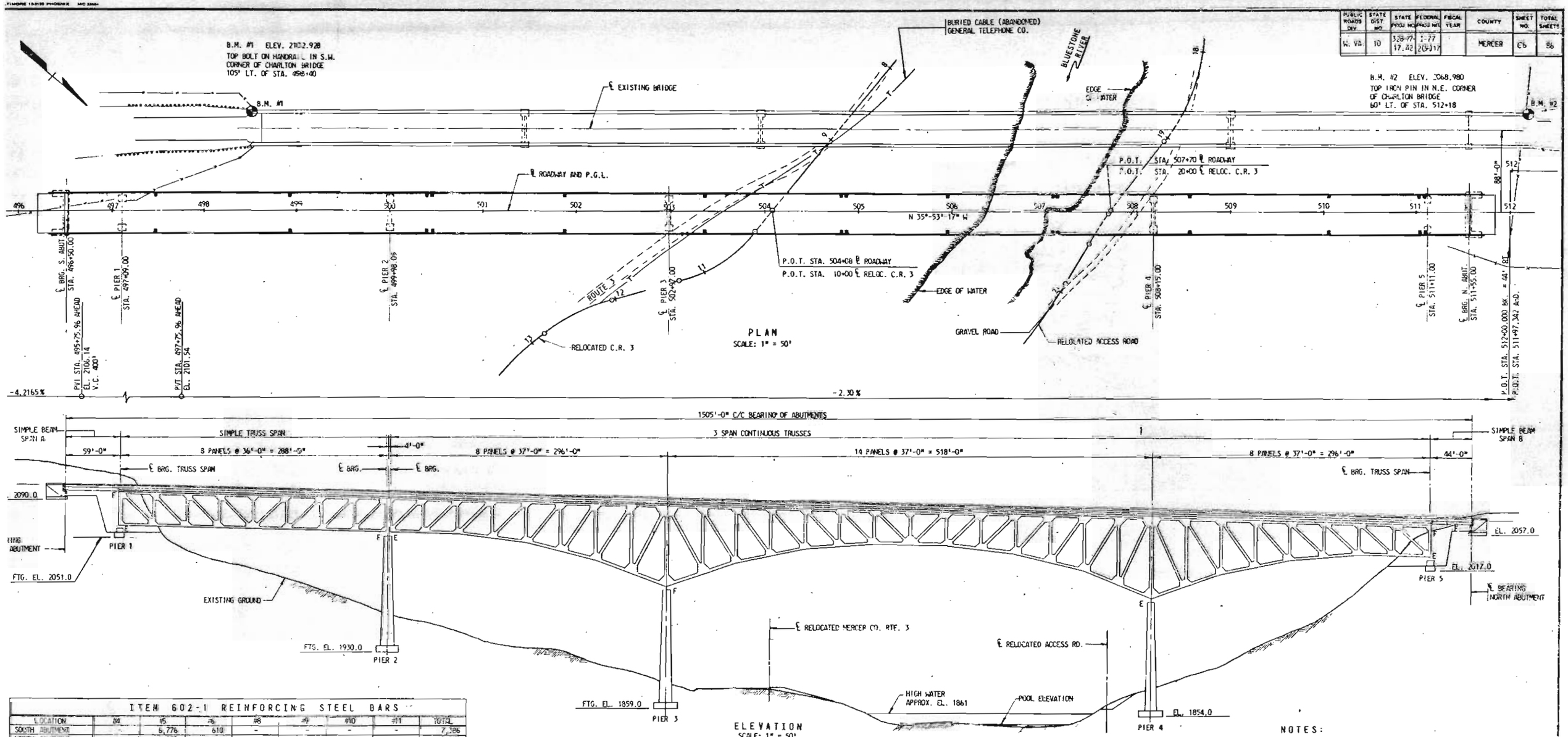

ITEM 602-1 REINFORCING STEEL BARS

LOCATION	#4	#5	#6	#8	#9	#10	#11	TOTAL
SOUTH ABUTMENT	-	6,776	610	-	-	-	-	7,386
NORTH ABUTMENT	-	6,039	-	-	-	-	-	6,039
PIER 1	-	1,074	8,142	-	-	10,514	8,182	28,912
PIER 2	545	58,379	2,176	-	-	-	220,205	281,305
PIER 3	672	100,588	5,147	-	77,307	-	402,436	586,172
PIER 4	672	75,450	4,065	4,379	31,885	-	224,161	317,612
PIER 5	-	1,356	1,142	-	5,236	4,850	3,763	16,377
SUBTOTAL	1,889	249,662	14,282	4,379	15,476	15,394	939,247	1,250,303
LAP BARS	7	154	15	38	117	85	5,764	6,176
TOTAL	1,896	249,816	14,297	4,417	15,363	15,479	945,011	1,256,479

ESTIMATE OF QUANTITIES

ITEM NO.	ITEM DESCRIPTION	UNIT	QUANTITY
2500-1	MOBILIZATION	L.S.	LUMP SUM
212-1	SUBSURFACE EXCAVATION	C.Y.	2,028
212-5	SELECT MATERIAL FOR BACKFILLING	C.Y.	328
307-2	CLASS 2 AGGREGATE BASE COURSE	C.Y.	56
502-1	14 1/2" PORTLAND CEMENT CONCRETE APPROACH SLAB	S.Y.	213
601-2	CLASS B CONCRETE	C.Y.	1
601-4	CLASS A CONCRETE FOR SUBSTRUCTURE	C.Y.	6,495
601-7	FIELD LABORATORY	L.S.	LUMP SUM
602-1	REINFORCING STEEL BARS	LB.	1,256,479
602-11.1	EPOXY COATED REINFORCING STEEL BARS	LB.	2,065
606-22	CRUSHED STONE, CRUSHED GRAVEL OR SILICA SAND FOR BED	C.Y.	77
606-27	6" UNDERDRAIN PIPE	L.F.	170
638-1	PROJECT MARKERS	EA.	2
639-1	CONSTRUCTION LOADING STAKES	L.S.	LUMP SUM
640-1	SUBMITTED FIELD OFFICE & STORAGE BUILDING	L.S.	LUMP SUM
640-3	BUILDING EQUIPMENT	L.S.	LUMP SUM
207-1	UNCLASSIFIED EXCAVATION	C.Y.	35,542

NOTES:

1. FOR GENERAL NOTES SEE SHEET NOS. C4 & C5

WEST VIRGINIA DEPARTMENT OF HIGHWAYS
CHARLESTON, WEST VIRGINIA
INTERSTATE ROUTE NO. 77

I-77 OVER BLUESTONE RIVER
BRIDGE NO. 3010
GENERAL PLAN AND ELEVATION - SUBSTRUCTURE

DESIGNED BY: [illegible]
CHECKED BY: [illegible]
GREINER ENGINEERING SCIENCES, INC.
CONSULTING ENGINEERS
HUNTINGTON, WEST VIRGINIA
CHARLESTON, WEST VIRGINIA
DATE: [illegible]
SHEET C6

REVISIONS

PUBLIC ROADS DIV.	STATE DIST. NO.	STATE PROJ. NO.	FEDERAL PROJ. NO.	FISCAL YEAR	COUNTY	SHEET NO.	TOTAL SHEETS
W. VA.	10	328-77-17.62	I-77 203017		MERCER	C7	86

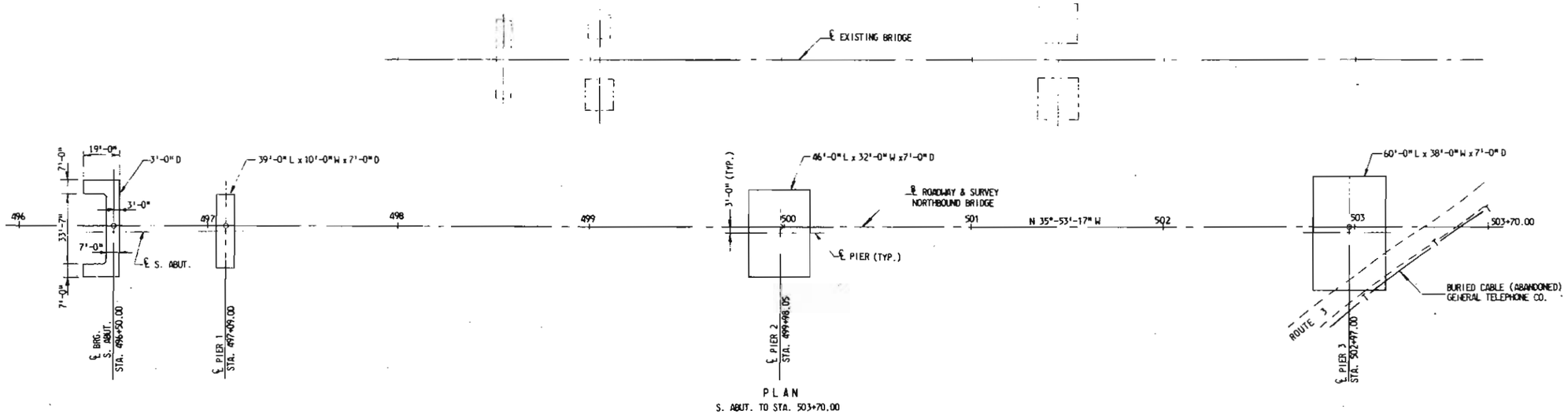

PLAN
S. ABUT. TO STA. 503+70.00

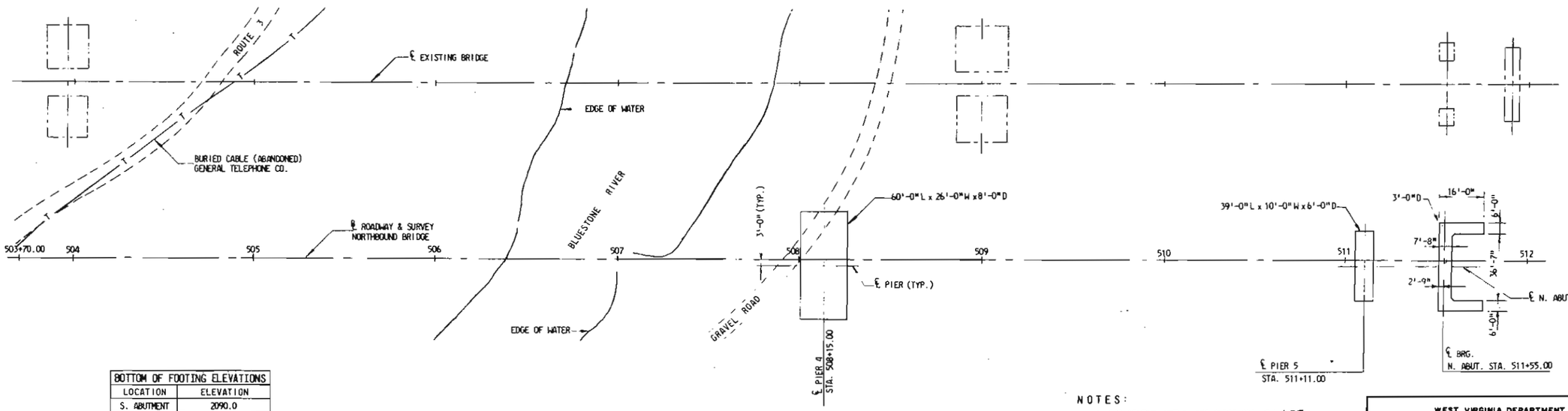

PLAN
STA. 503+70 TO N. ABUT.

BOTTOM OF FOOTING ELEVATIONS	
LOCATION	ELEVATION
S. ABUTMENT	2090.0
PIER 1	2051.0
PIER 2	1930.0
PIER 3	1859.0
PIER 4	1854.0
PIER 5	2017.0
N. ABUTMENT	2057.0

NOTES:

1. FOR GENERAL NOTES, SEE SHEET NOS. C4 & C5

NO.	SHEET	DESCRIPTION	DATE	BY

REVISIONS

WEST VIRGINIA DEPARTMENT OF HIGHWAYS
CHARLESTON, WEST VIRGINIA
INTERSTATE ROUTE NO. 77

I-77 OVER BLUESTONE RIVER
BRIDGE NO. 3010
FOUNDATION PLAN

DESIGNED BY: K.M.
DRAWN BY: K.M.
CHECKED BY: J.W.A.

GREINER ENGINEERING SCIENCES, INC.
CONSULTING ENGINEERS
BALTIMORE, MARYLAND
CHARLESTON, WEST VIRGINIA

DATE: NOV. 1975
SCALE: 1" = 30'
SHEET C7

PUBLIC ROADS DIV.	STATE DIST. NO.	STATE PROJ. NO.	FEDERAL PROJ. NO.	FISCAL YEAR	COUNTY	SHEET NO.	TOTAL SHEETS
W. VA.	10	328-77-17.42	I-77 20917		MERCER	C8	86

CONCRETE QUANTITY (C.Y.)	
S. ABUTMENT	143

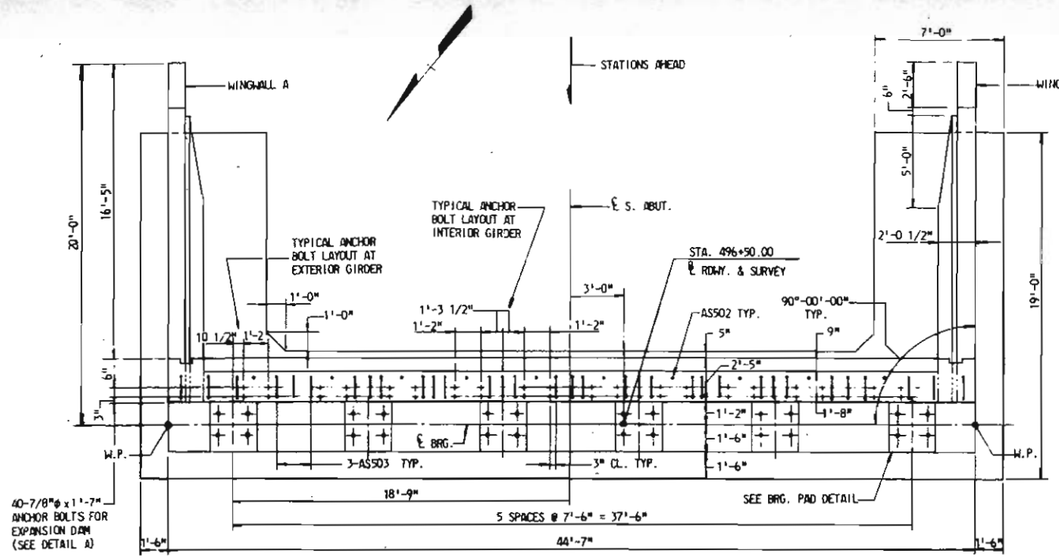

PLAN

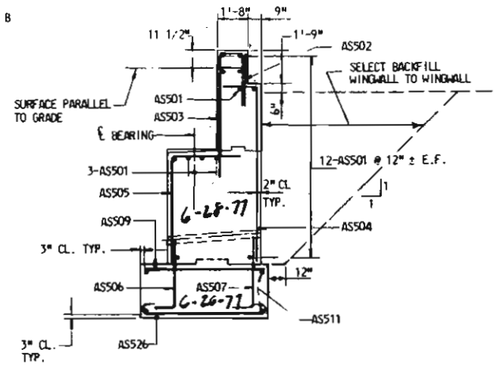

SECTION A-A

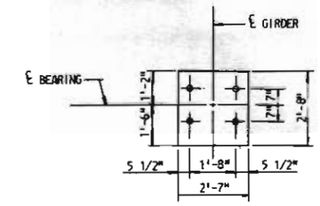

BEARING PAD DETAIL
SCALE: 3/8" = 1'-0"

BAR SCHEDULE

BAR MARK	NO. OF BARS	LENGTH	WEIGHT (LBS.)	TYPE
AS501	28	44'-3"	1292	STR.
AS502	10	2'-10"	30	STR.
AS503	33	11'-1"	381	17
AS504	45	11'-4"	532	B
AS505	45	9'-4"	438	B
AS506	69	4'-10"	348	B
AS507	45	5'-1"	239	B
AS508	32	18'-6"	617	STR.
AS509	34	6'-6"	231	STR.
AS510	48	6'-6"	325	STR.
AS511	16	47'-1"	786	STR.
AS512	4	5'-0"	21	STR.
AS513	24	11'-0"	275	STR.
AS514	48	4'-7"	229	B
AS515-AS517	4 EA. OF 3	12'-3"-14'-9" 1'-3" INCR.	169	STR.
AS518	4	8'-0"	33	STR.
AS519	24	11'-2"	280	STR.
AS520	12	16'-0"	200	STR.
AS521-AS525	4 EA. OF 5	5'-4" - 2'-2" 9 1/2" INCR.	78	STR.
AS526	34	7'-8"	272	1
AS601	24	5'-9"	207	B
AS602	24	11'-2"	403	STR.

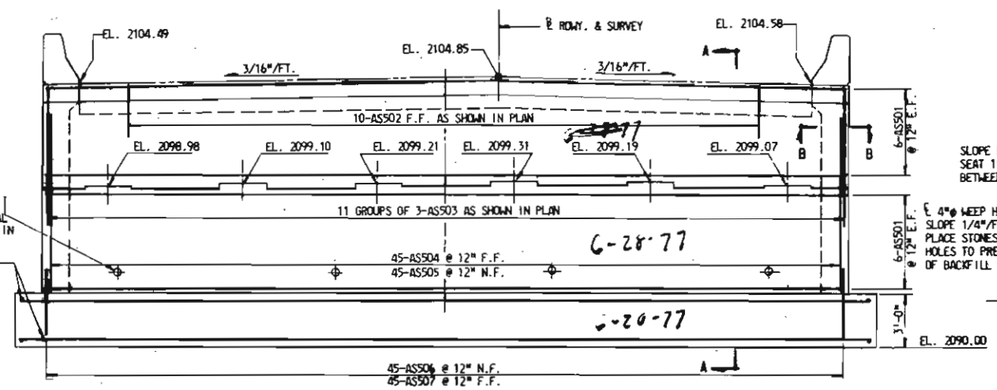

ELEVATION

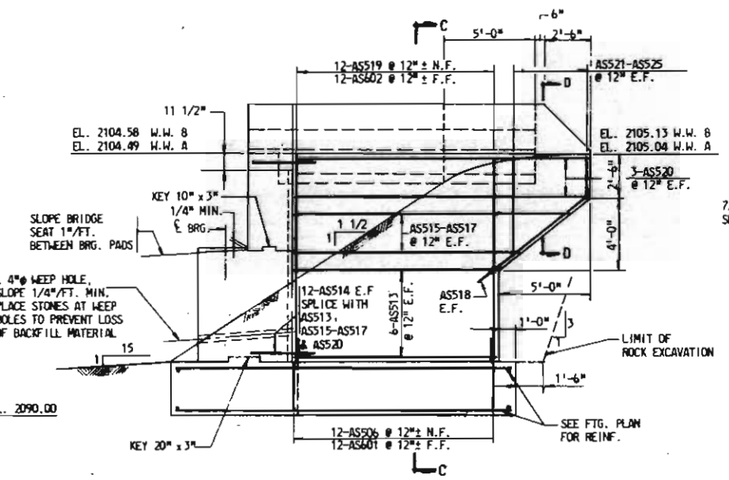

SIDE ELEVATION

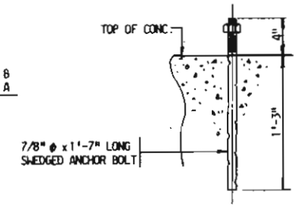

DETAIL A
SCALE: 1 1/2" = 1'-0"

BAR MARK	TYPE	DIMENSIONS A	DIMENSIONS B
AS504	B	1'-9"	9'-7"
AS505	B	3'-9"	5'-7"
AS506	B	10"	4'-0"
AS507	B	10"	4'-3"
AS514	B	10"	3'-9"
AS601	B	12"	4'-9"

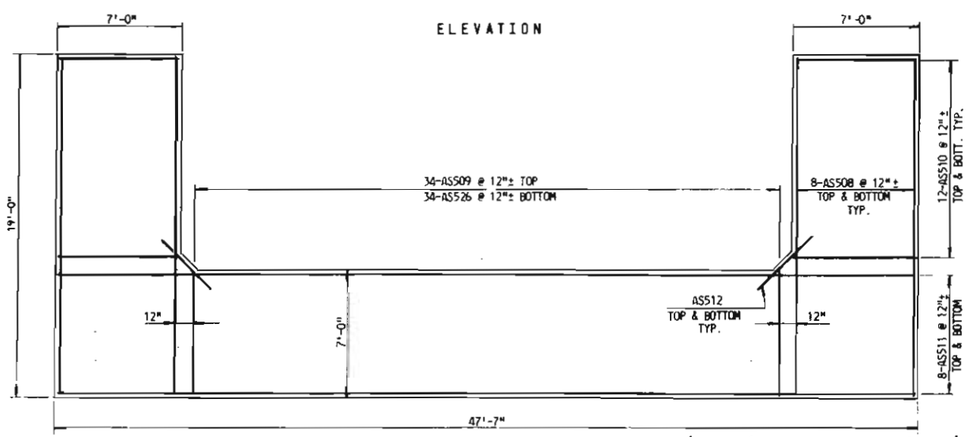

FOOTING PLAN

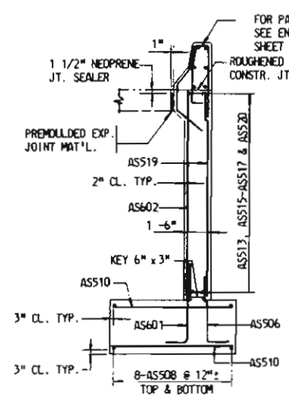

SECTION C-C

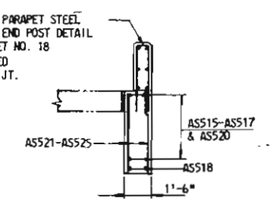

SECTION D-D

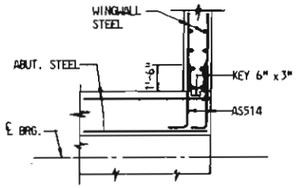

SECTION B-B

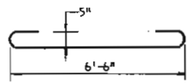

TYPE 1

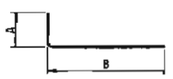

TYPE B

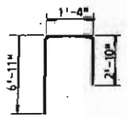

TYPE 17

NOTES:

1. FOR GENERAL NOTES SEE SHEET NOS. C4 & C5.
2. N.F. = NEAR FACE
   F.F. = FAR FACE
   E.F. = EACH FACE
3. THE FOOTING SHALL BE KEYED 3' INTO SOUND ROCK HAVING A BEARING CAPACITY OF 20 KSF.

Bad rock was encountered at Plan elevation, Footer was lowered (lowest Point 2087.50) To get a min. 1' key, This Change Approved by Dean Chipps, Regional engineer Assistant, See CX-3 (4-29-77) Also extra rebars used To Tie in This lowered Area Approved in CX-3 (4-29-77)

NO.	SHEET	DESCRIPTION	DATE	BY

REVISIONS

WEST VIRGINIA DEPARTMENT OF HIGHWAYS
CHARLESTON, WEST VIRGINIA
INTERSTATE ROUTE NO. 77

I-77 OVER BLUESTONE RIVER
BRIDGE NO. 3010
SOUTH ABUTMENT

DESIGNED BY: W.M.D.
DRAWN BY: O.A.B.
CHECKED BY: W.M.D.

GREINER ENGINEERING SCIENCES, INC.
CONSULTING ENGINEERS
BALTIMORE, MARYLAND
CHARLESTON, WEST VIRGINIA

DATE: NOV. 1975
SCALE: 1/4" = 1'-0" & AS NOTED
SHEET C8

PUBLIC ROADS DIV.	STATE DIST. NO.	STATE PROJ. NO.	FEDERAL PROJ. NO.	FISCAL YEAR	COUNTY	SHEET NO.	TOTAL SHEETS
W. VA.	10	326-77-17.42	I-77 2(06)17		MERCER	C9	86

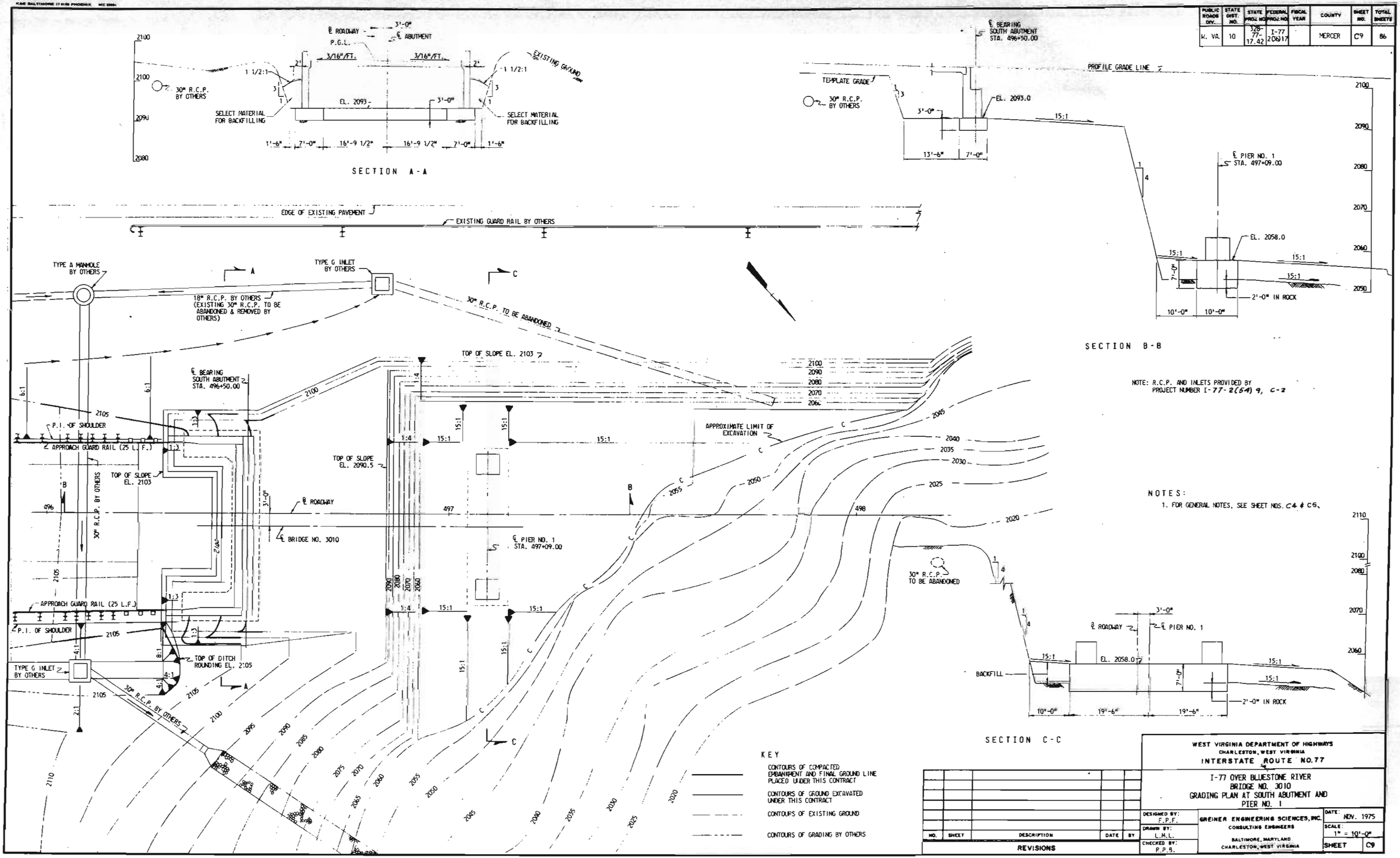

NOTE: R.C.P. AND INLETS PROVIDED BY PROJECT NUMBER I-77-2(54)9, C-2

NOTES:

1. FOR GENERAL NOTES, SEE SHEET NOS. C4 & C5.

NO.	SHEET	DESCRIPTION	DATE	BY

REVISIONS

WEST VIRGINIA DEPARTMENT OF HIGHWAYS
CHARLESTON, WEST VIRGINIA
INTERSTATE ROUTE NO. 77

I-77 OVER BLUESTONE RIVER
BRIDGE NO. 3010
GRADING PLAN AT SOUTH ABUTMENT AND PIER NO. 1

DESIGNED BY: F.P.F.
DRAWN BY: L.M.L.
CHECKED BY: P.P.S.

GREINER ENGINEERING SCIENCES, INC.
CONSULTING ENGINEERS
BALTIMORE, MARYLAND
CHARLESTON, WEST VIRGINIA

DATE: NOV. 1975
SCALE: 1" = 10'-0"
SHEET C9

Reinforcing Bars Not installed Properly in North Abutment Backwall, Approved Plan of resolving This by FHWA (CX-3, 7-18-78

PUBLIC ROADS DIV.	STATE DIST. NO.	STATE PROJ. NO.	FEDERAL PROJ. NO.	FISCAL YEAR	COUNTY	SHEET NO.	TOTAL SHEETS
W. VA	10	328-77-17,42	I-77 20917		MERCER	C10	86

CONCRETE QUANTITY (C.Y.)	
N. ABUTMENT	125

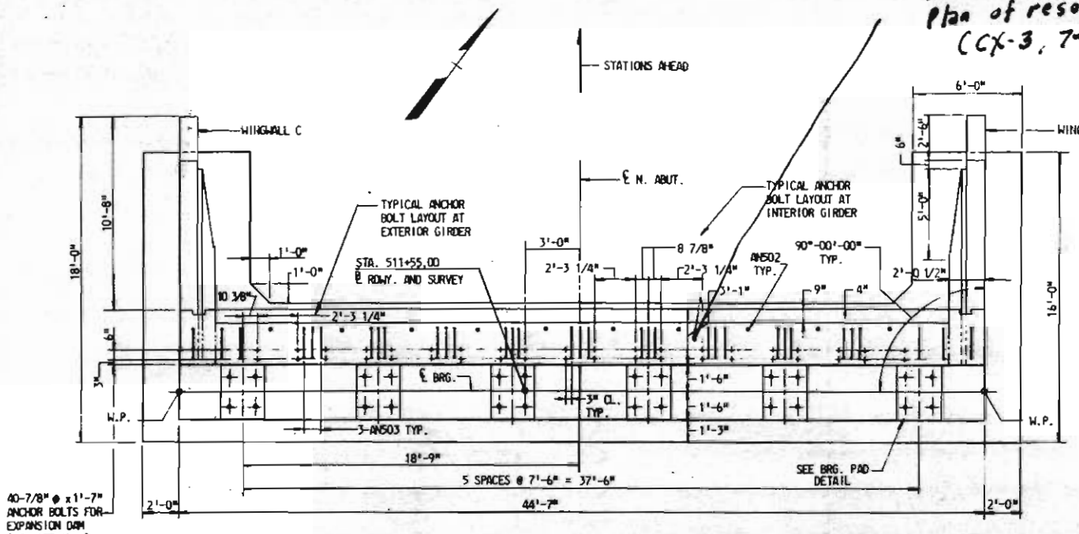

PLAN

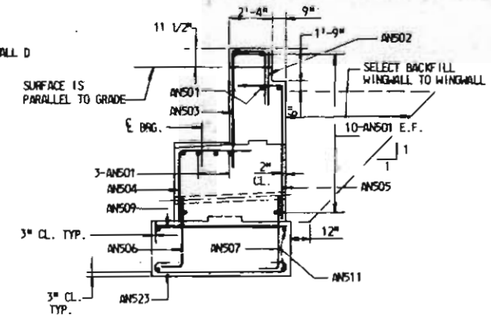

SECTION A-A

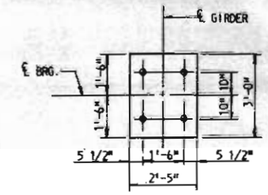

BEARING PAD DETAIL
SCALE: 3/8" = 1'-0"

BAR SCHEDULE				
BAR MARK	NO. OF BARS	LENGTH	WEIGHT (LBS)	TYPE
AN501	24	44'-3"	1108	STR.
AN502	10	2'-10"	30	STR.
AN503	33	11'-9"	404	17
AN504	45	7'-9"	364	B
AN505	45	9'-5"	442	B
AN506	63	4'-10"	318	B
AN507	63	5'-1"	334	B
AN508	28	15'-6"	453	STR.
AN509	36	7'-2"	269	STR.
AN510	36	5'-6"	207	STR.
AN511	16	48'-1"	802	STR.
AN512	4	5'-0"	21	STR.
AN513	20	7'-4"	153	STR.
AN514	36	9'-0"	338	STR.
AN515	4	5'-6"	23	STR.
AN516	40	5'-3"	219	B
AN517	12	10'-4"	129	STR.
AN518-AN519	4 EA. OF 2	8'-4" - 9'-4" 1'-0" INCR.	74	STR.
AN523	36	8'-4"	313	1
AN520-AN522	4 EA. OF 3	3'-10" - 2'-2" 10" INCR.	38	STR.

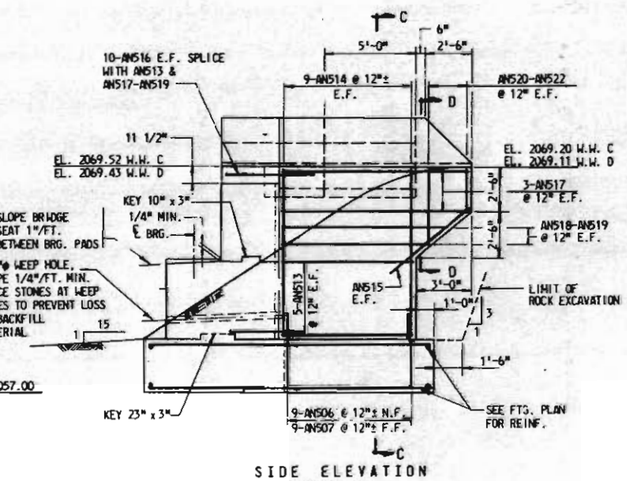

SIDE ELEVATION

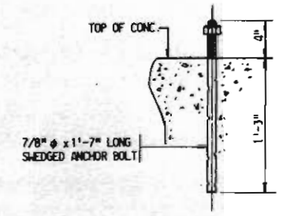

DETAIL A
SCALE: 1 1/2" = 1'-0"

BAR MARK	TYPE	DIMENSIONS A	DIMENSIONS B
AN504	B	3'-6"	4'-3"
AN505	B	1'-10"	7'-7"
AN506	B	10"	4'-0"
AN507	B	10"	4'-3"
AN516	B	10"	4'-5"

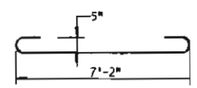

TYPE 1

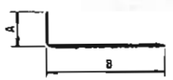

TYPE B

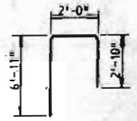

TYPE 17

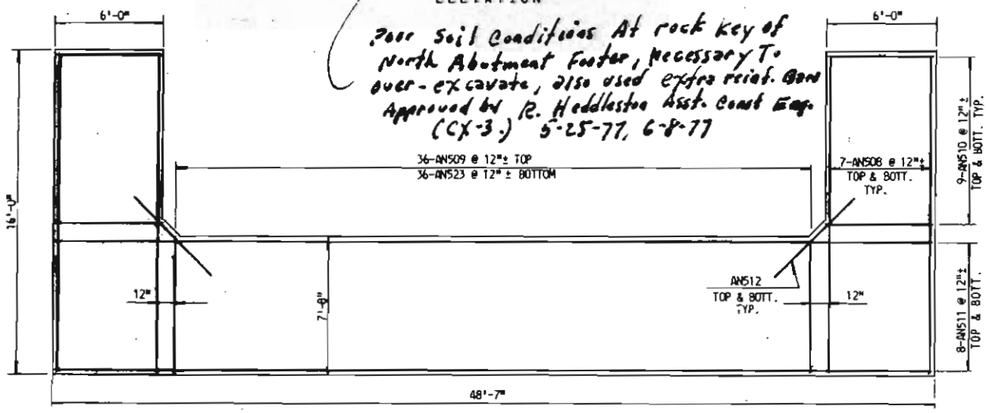

Poor Soil Conditions At rock key of North Abutment Footer, Necessary To over-excavate, also used extra reinf. Bars Approved by R. Heddleston Asst. Const Eng. (CX-3.) 5-25-77, 6-8-77

FOOTING PLAN

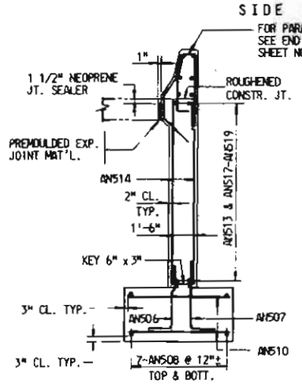

SECTION C-C

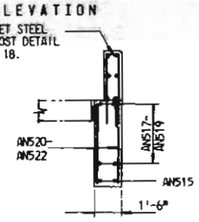

SECTION D-D

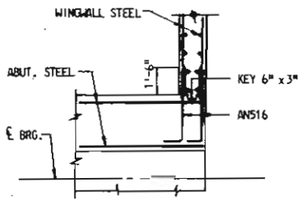

SECTION B-B

NOTES:

1. FOR GENERAL NOTES SEE SHEET NOS. C4 & C5.
2. N.F. = NEAR FACE
   F.F. = FAR FACE
   E.F. = EACH FACE
3. THE FOOTING SHALL BE KEYED 3' INTO SOUND ROCK HAVING A BEARING CAPACITY OF 20 KSF.

NO.	SHEET	DESCRIPTION	DATE	BY

REVISIONS

WEST VIRGINIA DEPARTMENT OF HIGHWAYS
CHARLESTON, WEST VIRGINIA
INTERSTATE ROUTE NO. 77

I-77 OVER BLUESTONE RIVER
BRIDGE NO. 3010
NORTH ABUTMENT

DESIGNED BY: W.R.F.
DRAWN BY: O.A.B.
CHECKED BY: W.M.D.

GREINER ENGINEERING SCIENCES, INC.
CONSULTING ENGINEERS
BALTIMORE, MARYLAND
CHARLESTON, WEST VIRGINIA

DATE: NOV. 1975
SCALE: 1/4" = 1'-0" & AS NOTED
SHEET C10

PUBLIC ROADS DIV.	STATE DIST. NO.	STATE PROJ. NO.	FEDERAL PROJ. NO.	FISCAL YEAR	COUNTY	SHEET NO.	TOTAL SHEETS
W. VA.	10	328-77-17.42	I-77 2 06917		MERCER	C11	86

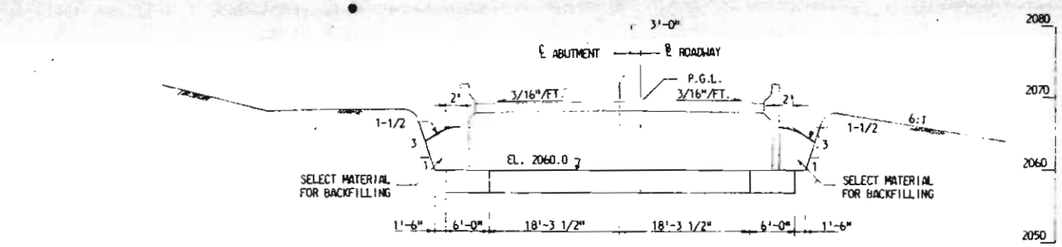

SECTION A-A

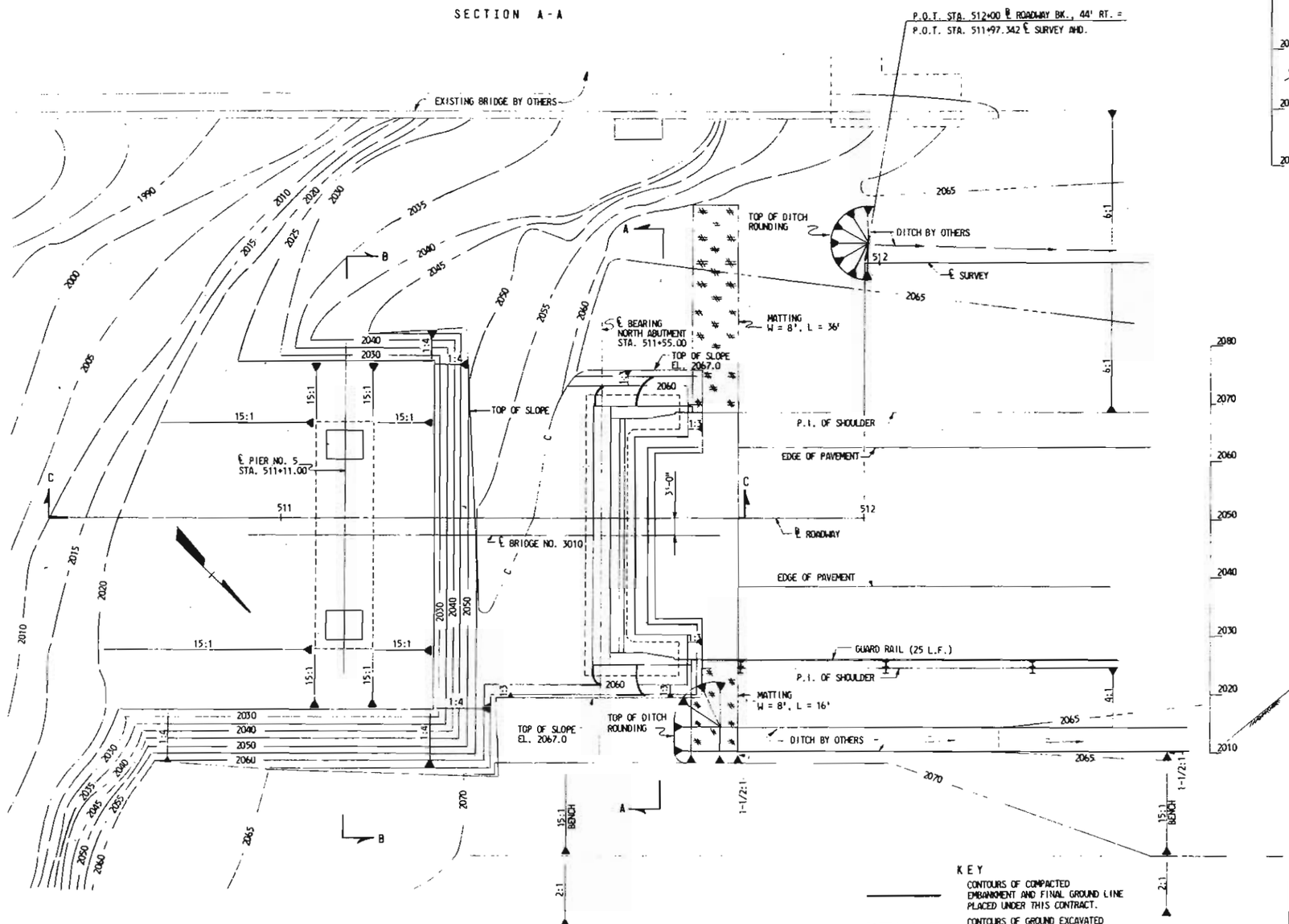

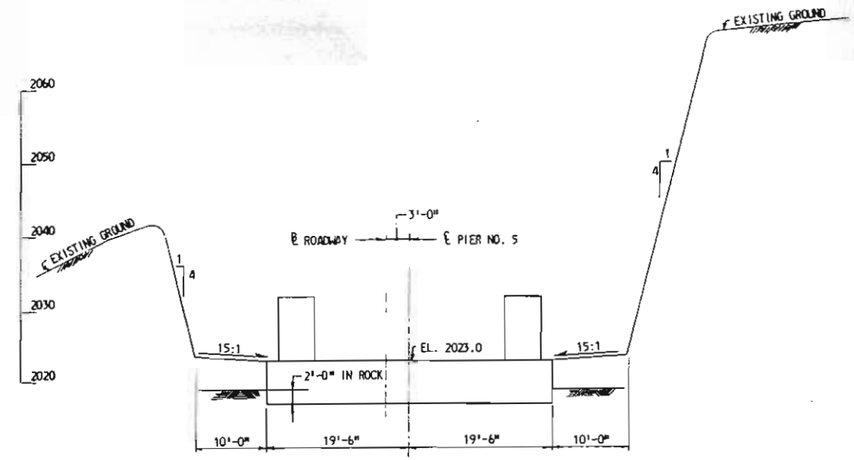

SECTION B-B

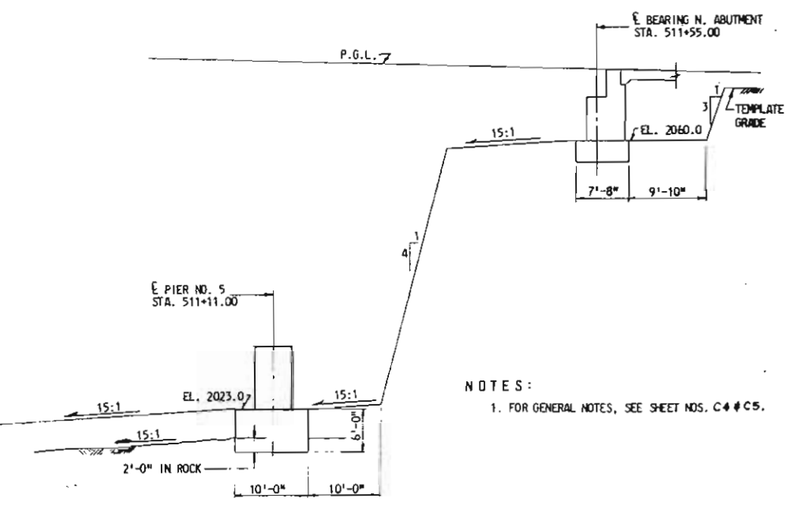

SECTION C-C

NOTES:

1. FOR GENERAL NOTES, SEE SHEET NOS. C4 & C5.

KEY

- CONTOURS OF COMPACTED EMBANKMENT AND FINAL GROUND LINE PLACED UNDER THIS CONTRACT.
- CONTOURS OF GROUND EXCAVATED UNDER THIS CONTRACT.
- CONTOURS OF EXISTING GROUND.
- CONTOURS OF GRADING BY OTHERS.

NO.	SHEET	DESCRIPTION	DATE	BY

REVISIONS

WEST VIRGINIA DEPARTMENT OF HIGHWAYS
CHARLESTON, WEST VIRGINIA
INTERSTATE ROUTE NO. 77

I-77 OVER BLUESTONE RIVER
BRIDGE NO. 3010
GRADING PLAN AT NORTH ABUTMENT AND
PIER NO. 5

DESIGNED BY: F.P.F.
DRAWN BY: L.H.L.
CHECKED BY: R.P.S.

GREINER ENGINEERING SCIENCES, INC.
CONSULTING ENGINEERS
BALTIMORE, MARYLAND
CHARLESTON, WEST VIRGINIA

DATE: NOV. 1975
SCALE: 1" = 10'-0"
SHEET C11

PUBLIC ROADS DIV.	STATE DIST. NO.	STATE PROJ. NO.	FEDERAL PROJ. NO.	FISCAL YEAR	COUNTY	SHEET NO.	TOTAL SHEETS
W. VA.	10	328-77-17.42	I-77 206(17)		MERCER	C12	86

CONCRETE QUANTITY (C.Y.)	
PIER 1	115

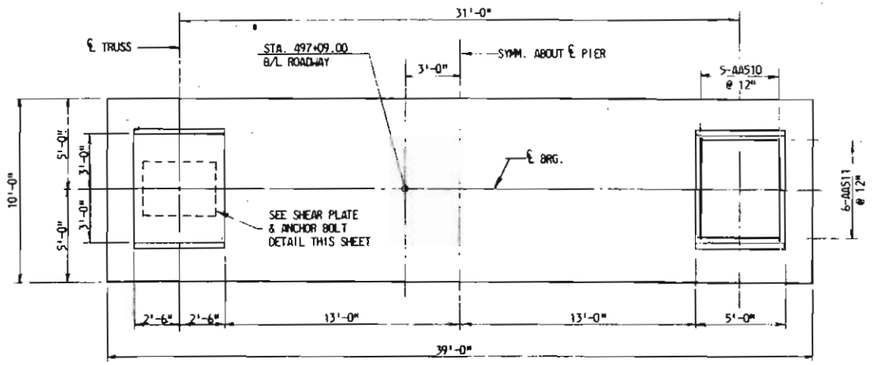

PLAN

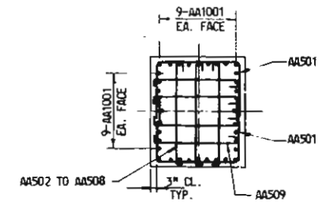

SECTION A-A

BAR SCHEDULE					
BAR MARK	NO. OF BARS	LENGTH	WEIGHT (LBS.)	TYPE	DIMENSION A
AA501	28	11'-8"	341	17	
AA502-AA508	6 EA. OF 7	6'-7" - 6'-10" 1/2" INCR.	294	T-5	5'-6" - 5'-9" 1/2" INCR.
AA509	56	5'-7"	326	T-5	4'-6"
AA510	10	5'-6"	57	STR.	
AA511	12	4'-6"	56	STR.	
AA601	80	9'-6"	1142	STR.	
AA1001	72	14'-5"	4467	2A	
AA1002	34	41'-4"	6047	1	38'-6"
AA1101	40	38'-6"	8182	STR.	

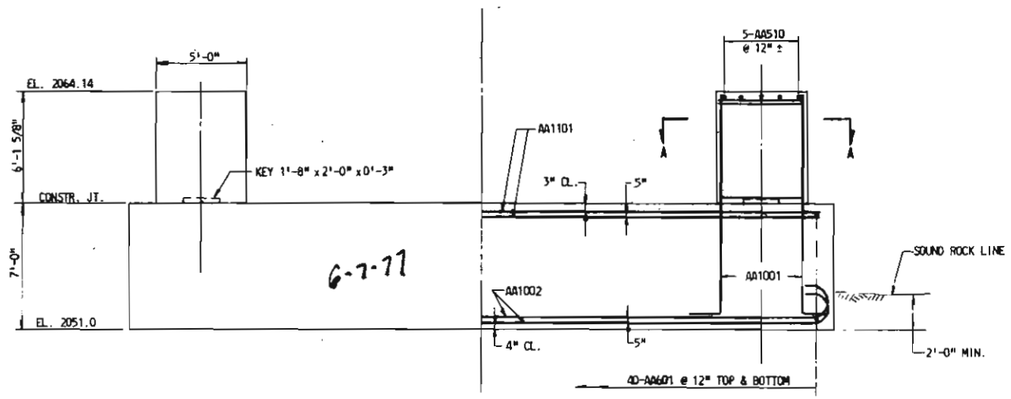

ELEVATION

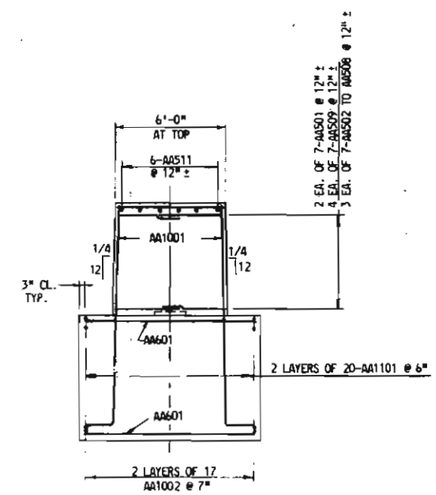

SIDE ELEVATION

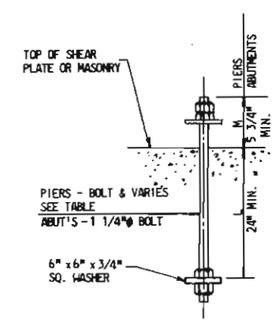

ANCHOR BOLT DETAIL

NO SCALE

ANCHOR BOLTS AND SHEAR PLATES FURNISHED BY OTHERS & SET UNDER THIS CONTRACT, SEE GENERAL NOTES SHEET NO. C4.

TOP WASHER, BOLT AND NUTS: A709-74 GRADE 50 WT2

BOTTOM WASHER AND NUTS: A36

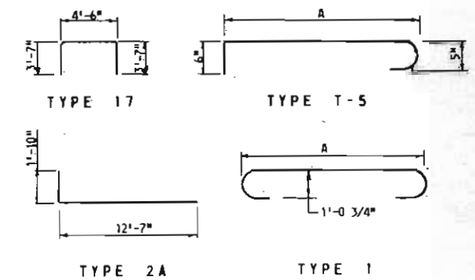

NOTES:

1. FOR GENERAL NOTES, SEE SHEET NOS. C4 & C5.
2. THE FOOTING SHALL BE KEYED A MINIMUM OF 2' INTO SOUND ROCK HAVING A BEARING CAPACITY OF 20 KSF.
3. SHEAR PLATES SHALL BE A36 STEEL.
4. SUBJECT TO APPROVAL OF THE ENGINEER, REINFORCEMENT MAY BE MOVED TO CLEAR ANCHOR BOLTS.

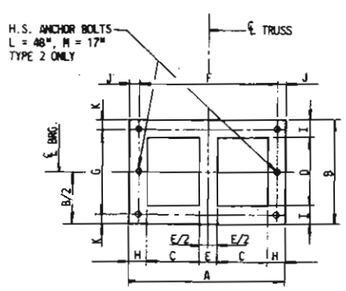

TYPES 1 & 2

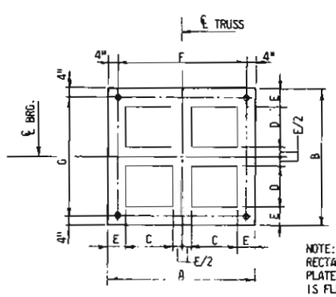

TYPE 3

NOTE: CONCRETE SHALL FILL RECTANGULAR HOLES IN SHEAR PLATE, SUCH THAT CONCRETE IS FLUSH WITH TOP.

SHEAR PLATE DETAIL

NO SCALE

ANCHOR BOLT AND SHEAR PLATE DIMENSIONS																	
LOCATION	TYPE	A	B	C	D	E	F ANCHOR BOLT & HOLE SPACING	G ANCHOR BOLT & HOLE SPACING	H	I	J	K	L MIN.	M MIN.	PLATE THICKNESS	HOLE DIA.	ANCHOR BOLT DIA.
PIER 1	1	4'-2"	3'-0"	1'-4"	2'-2"	6"	2 SPA. @ 1'-10 1/2"	1 SPA. @ 2'-7"	6"	5"	2 1/2"	2 1/2"	35"	8 3/4"	1 3/4"	1 13/16"	1 3/4"
PIER 2 BK.	1	4'-0"	2'-6"	1'-4 1/2"	1'-8"	5"	1'-4 1/2", 10", 1'-4 1/2"	1 SPA. @ 2'-1"	5"	5"	2 1/2"	2 1/2"	30"	6 1/4"	1 3/4"	1 9/16"	1 1/2"
PIER 2 AH.	2	3'-6"	2'-9"	11 1/2"	2'-1"	5"	1 SPA. @ 2'-8 1/2"	2 SPA. @ 1'-2"	7"	4"	4 3/4"	2 1/2"	30"	8"	2"	1 9/16"	1 1/2"
PIER 3	3	5'-5"	5'-0"	1'-8 1/2"	1'-6"	8"	3 SPA. @ 1'-7"	4 SPA. @ 1'-1"	-	-	-	-	30"	8"	1 1/2"	1 9/16"	1 1/2"
PIER 4	3	5'-8"	6'-6"	1'-10"	2'-3"	8"	1 SPA. @ 5'-0"	5 SPA. @ 1'-2"	-	-	-	-	30"	8 3/4"	1 1/2"	1 9/16"	1 1/2"
PIER 5	1	3'-6"	3'-2"	1'-0"	2'-0"	6"	2 SPA. @ 1'-6 1/2"	1 SPA. @ 2'-9"	6"	6"	2 1/2"	2 1/2"	30"	8"	1 5/8"	1 9/16"	1 1/2"

NO.	SHEET	DESCRIPTION	DATE	BY

REVISIONS

WEST VIRGINIA DEPARTMENT OF HIGHWAYS
CHARLESTON, WEST VIRGINIA
INTERSTATE ROUTE NO. 77

I-77 OVER BLUESTONE RIVER
BRIDGE NO. 3010
PIER 1

DESIGNED BY: W.M.D.
DRAWN BY: L.L. & T.G.
CHECKED BY: M.K.Y. & W.M.D.

GREINER ENGINEERING SCIENCES, INC.
CONSULTING ENGINEERS
BALTIMORE, MARYLAND
CHARLESTON, WEST VIRGINIA

DATE: NOV. 1975
SCALE: 1/4" = 1'-0"
SHEET C12

PUBLIC ROADS DIV.	STATE DIST. NO.	STATE PROJ. NO.	FEDERAL PROJ. NO.	FISCAL YEAR	COUNTY	SHEET NO.	TOTAL SHEETS
W. VA.	10	328-77-17.42	I-77 2(36)17		MERCER	C13	86

CONCRETE QUANTITY (C.Y.)

PIER 2	1381

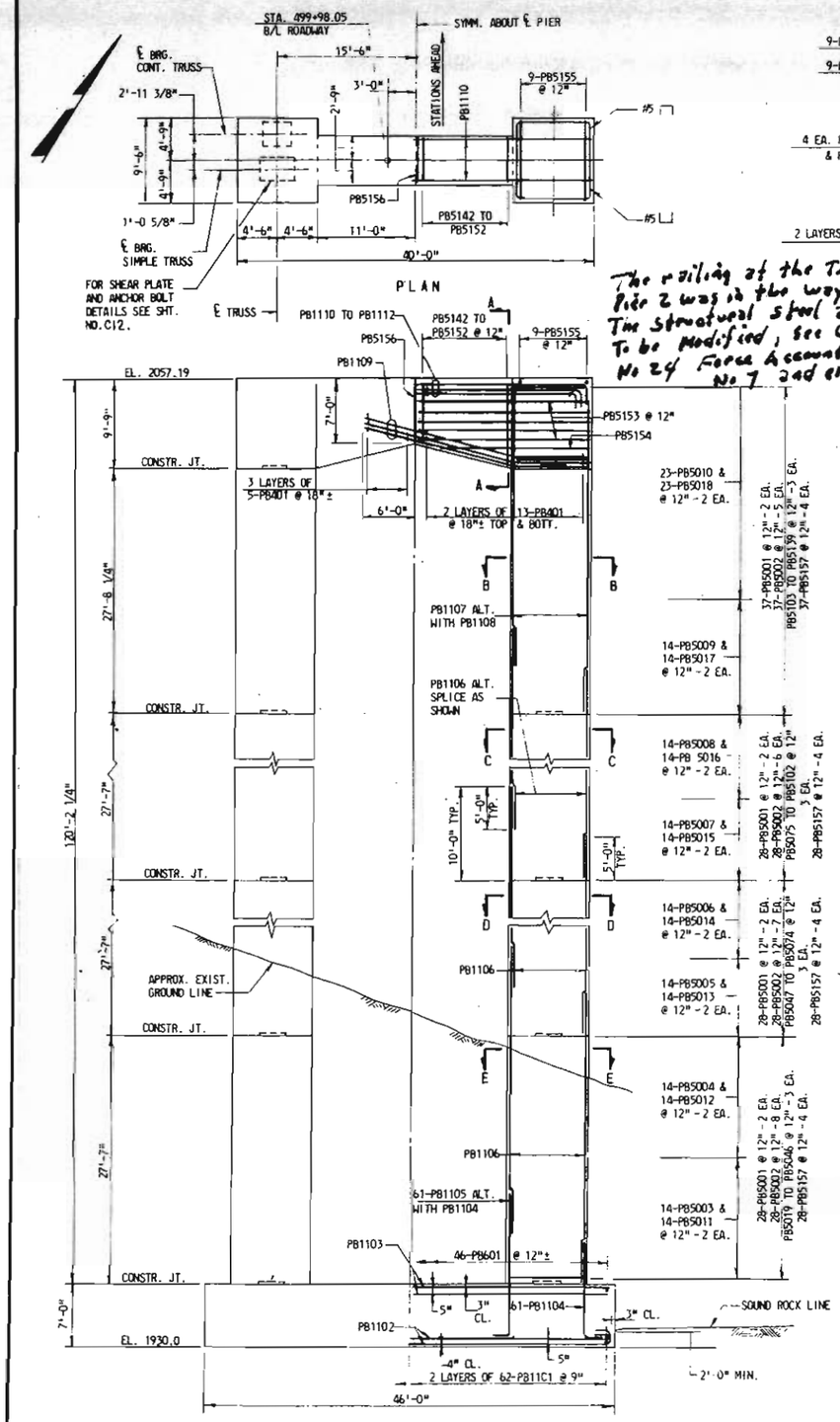

The railing at the Top of Pier 2 was in the way of the Structural Steel 2nd Lift. To be modified, see Change order No 24 Force Account work order No 7 2nd erection sheet E609

BAR SCHEDULE

BAR MARK	NO. OF BARS	LENGTH	WEIGHT (LBS.)	TYPE	DIMENSION A
PB401	134	6'-1"	545	T5	5'-0"
PB5001	484	13'-1"	6,605	14	
PB5002	1546	9'-7"	15,453	T5	8'-6"
PB5003-PB5009	56 EA. OF 7	22'-2"-18'-8" 7" INCR.	8,347	17	7'-4" - 5'-7" 3 1/2" INCR.
PB5010	92	18'-1"	1,735	17	5'-3 1/2"
PB5011-PB5017	56 EA. OF 7	24'-2"-20'-8" 7" INCR.	9,165	17	7'-10" - 6'-1" 3 1/2" INCR.
PB5018	92	20'-1"	1,927	17	5'-9 1/2"
PB5019-PB5046	6 EA. OF 28	15'-1"-13'-11 1/2" 1/2" INCR.	2,541	T5	14'-0" - 12'-10 1/2" 1/2" INCR.
PB5047-PB5074	6 EA. OF 28	13'-11"-12'-9 1/2" 1/2" INCR.	2,339	T5	12'-10" - 11'-8 1/2" 1/2" INCR.
PB5075-PB5102	6 EA. OF 28	12'-9"-11'-7 1/2" 1/2" INCR.	2,136	T5	11'-8" - 10'-6 1/2" 1/2" INCR.
PB5103-PB5139	6 EA. OF 37	11'-7"-10'-1" 1/2" INCR.	2,508	T5	10'-6" - 9'-0" 1/2" INCR.
PB5142-PB5152	8 EA. OF 11	12'-1"-14'-7" 3" INCR.	1,224	17A	6'-9" - 9'-3" 3" INCR.
PB5153	10	39'-6"	412	STR.	
PB5154	4	16'-0"	67	STR.	
PB5155	18	9'-0"	169	STR.	
PB5156	4	11'-10"	49	17A	6'-6"
PB5157	968	3'-8"	3,702	T5	2'-7"
PB601	46	31'-6"	2,176	STR.	
PB1101	124	34'-8"	22,839	1	31'-6"
PB1102	128	48'-8"	33,096	1	45'-6"
PB1103	110	45'-6"	26,592	STR.	
PB1104	122	13'-7"	8,805	2A	11'-7"
PB1105	122	18'-7"	12,045	2A	16'-7"
PB1106	696	32'-7"	120,488	STR.	
PB1107	96	32'-0"	16,322	STR.	
PB1108	96	37'-0"	18,872	STR.	
PB1109	46	26'-3"	6,415	3A	
PB1110	9	43'-6"	2,080	17A	39'-6"
PB1111	9	42'-8"	2,040	17A	38'-8"
PB1112	5	41'-10"	1,111	17A	37'-10"

NOTES:

1. FOR GENERAL NOTES SEE SHEET NOS. C4 & C5.
2. LAP SPLICE FOR COLUMN TIES SHALL BE 1'-5" MIN.
3. COLUMN BARS CIRCLED IN SECTIONS C-C, D-D & E-E SHALL PROJECT ABOVE THE CONSTRUCTION JOINT, BUT SHALL NOT BE SPLICED.
4. THE FOOTING SHALL BE KEYED A MINIMUM OF 2' INTO SOUND ROCK HAVING A BEARING CAPACITY OF 20 KSF.

NO.	SHEET	DESCRIPTION	DATE	BY

REVISIONS

WEST VIRGINIA DEPARTMENT OF HIGHWAYS
CHARLESTON, WEST VIRGINIA
INTERSTATE ROUTE NO. 77

I-77 OVER BLUESTONE RIVER
BRIDGE NO. 3010
PIER 2

DESIGNED BY: W.M.G.
DRAWN BY: T.G.
CHECKED BY: M.K.Y.

GREINER ENGINEERING SCIENCES, INC.
CONSULTING ENGINEERS
BALTIMORE, MARYLAND
CHARLESTON, WEST VIRGINIA

DATE: NOV. 1975
SCALE: 1/4" = 1'-0" & AS NOTED
SHEET C13

CONCRETE QUANTITY (C.Y.)	
PIER 3	2457.

PUBLIC ROADS DIV.	STATE DIST. NO.	STATE PROJ. NO.	FEDERAL PROJ. NO.	FISCAL YEAR	COUNTY	SHEET NO.	TOTAL SHEETS
W. VA.	10	328-77-17.42	I-77 2G617		MERCER	C14	96

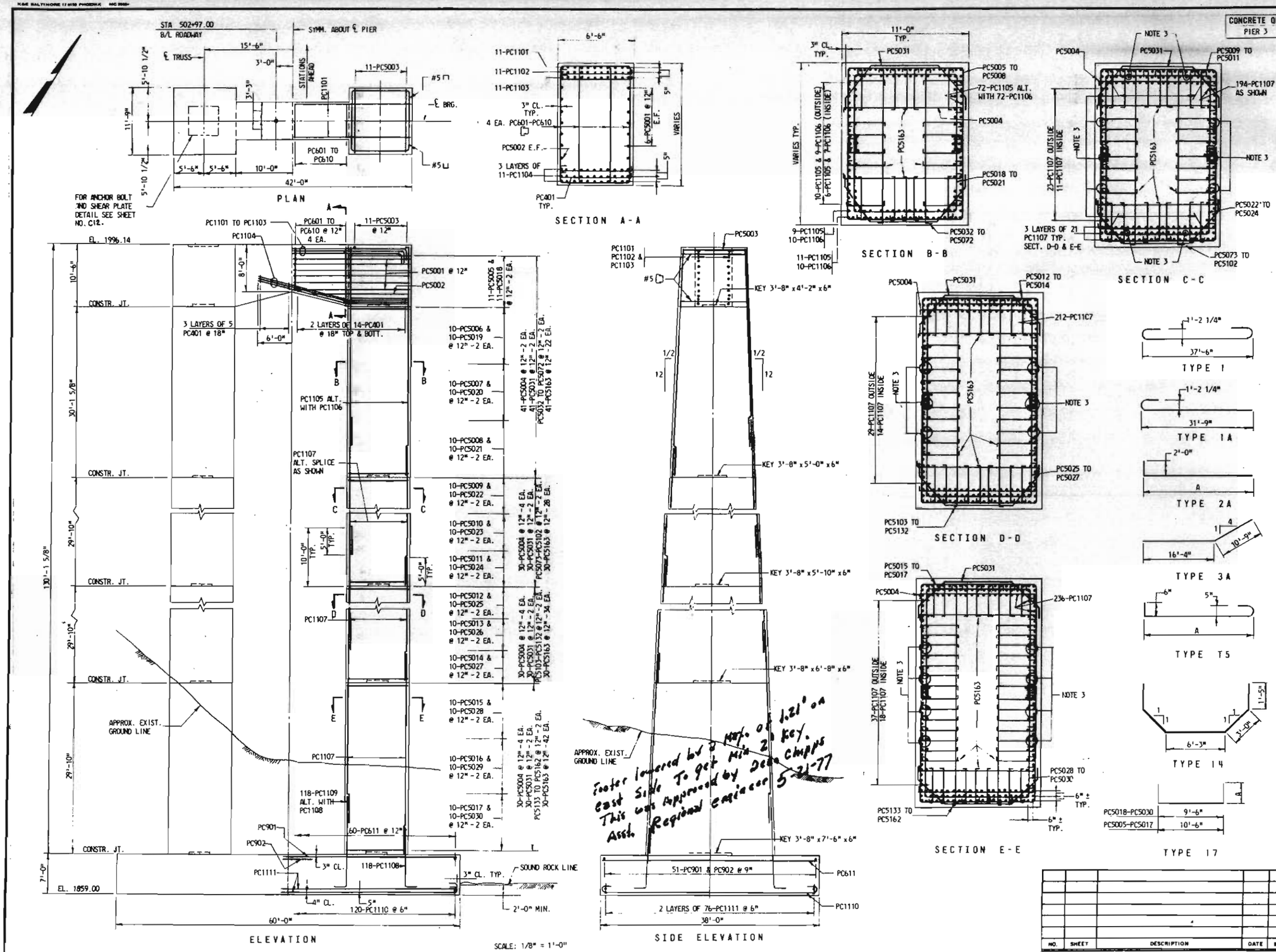

BAR SCHEDULE

BAR MARK	NO. OF BARS	LENGTH	WEIGHT (LBS.)	TYPE	DIMENSION A
PC401	142	7'-1"	672	T5	6'-0"
PC5001	12	41'-6"	519	STR.	
PC5002	4	17'-9"	74	STR.	
PC5003	22	11'-3"	258	STR.	
PC5004	884	11'-7"	10,677	T5	10'-6"
PC5005	44	24'-0"	1,101	17	6'-9"
PC5006-PC5017	40 EA. OF 12	24'-10" - 34'-0" 10" INCR.	14,727	17	7'-2" - 11'-9" 5" INCR.
PC5018	44	22'-0"	1,010	17	6'-3"
PC5019-PC5030	40 EA. OF 12	22'-10" - 32'-0" 10" INCR.	13,726	17	6'-8" - 11'-3" 5" INCR.
PC5031	524	15'-1"	8,244	14	
PC5032-PC5072	4 EA. OF 41	12'-4" - 15'-8" 1" INCR.	2,395	T5	11'-3" - 14'-7" 1" INCR.
PC5073-PC5162	4 EA. OF 90	15'-9" - 23'-2" 1" INCR.	7,306	T5	14'-8" - 22'-1" 1" INCR.
PC5163	8044	4'-10"	40,551	T5	3'-9"
PC601-PC610	8 EA. OF 10	13'-7" - 15'-10" 3" INCR.	1,767	17A	7'-7" - 9'-10" 3" INCR.
PC611	60	37'-6"	3,380	STR.	
PC901	51	29'-9"	5,159	STR.	
PC902	51	35'-7"	6,170	STR.	
PC1101-PC1103	11 EA. OF 3	45'-6" - 43'-10" 10" INCR.	7,831	17A	41'-6" - 39'-10" 10" INCR.
PC1104	66	27'-1"	9,497	3A	
PC1105	144	40'-0"	30,603	STR.	
PC1106	144	35'-0"	26,778	STR.	
PC1107	1284	34'-10"	237,629	STR.	
PC1108	236	13'-7"	17,032	2A	11'-7"
PC1109	236	18'-7"	23,301	2A	16'-7"
PC1110	120	40'-8"	25,927	1	
PC1111	304	33'-4"	53,838	1A	

NOTES:

1. FOR GENERAL NOTES SEE SHEET NOS. C4 & C5.
2. LAP SPLICE FOR COLUMN TIES SHALL BE 1'-5" MIN.
3. COLUMN BARS INDICATED IN SECTIONS C-C, D-D & E-E SHALL PROJECT ABOVE THE CONSTRUCTION JOINT, BUT SHALL NOT BE SPLICED.
4. THE FOOTING SHALL BE KEYED A MINIMUM OF 2' INTO SOUND ROCK HAVING A BEARING CAPACITY OF 20 KSF.

NO.	SHEET	DESCRIPTION	DATE	BY

REVISIONS

WEST VIRGINIA DEPARTMENT OF HIGHWAYS
CHARLESTON, WEST VIRGINIA
INTERSTATE ROUTE NO. 77

I-77 OVER BLUESTONE RIVER
BRIDGE NO. 3010
PIER 3

DESIGNED BY: W.M.D.
DRAWN BY:
CHECKED BY:

GREINER ENGINEERING SCIENCES, INC.
CONSULTING ENGINEERS
BALTIMORE, MARYLAND
CHARLESTON, WEST VIRGINIA

DATE NOV. 1975
SCALE 1/4" = 1'-0" & AS NOTED
SHEET C14

PUBLIC ROADS DIV.	STATE DIST. NO.	STATE PROJ. NO.	FEDERAL PROJ. NO.	FISCAL YEAR	COUNTY	SHEET NO.	TOTAL SHEETS
W. VA.	10	328-77-17.42	I-77 20917		MERCER	C15	86

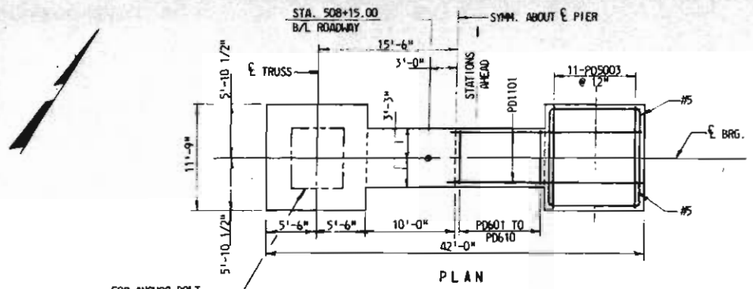

PLAN

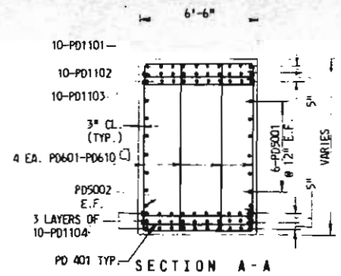

SECTION A-A

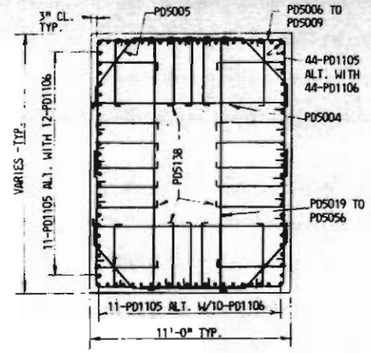

SECTION B-B

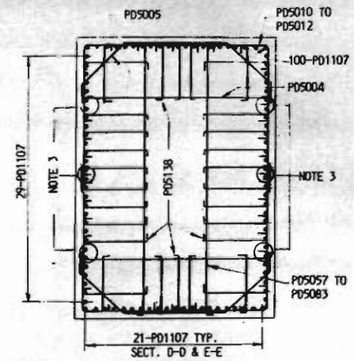

SECTION C-C

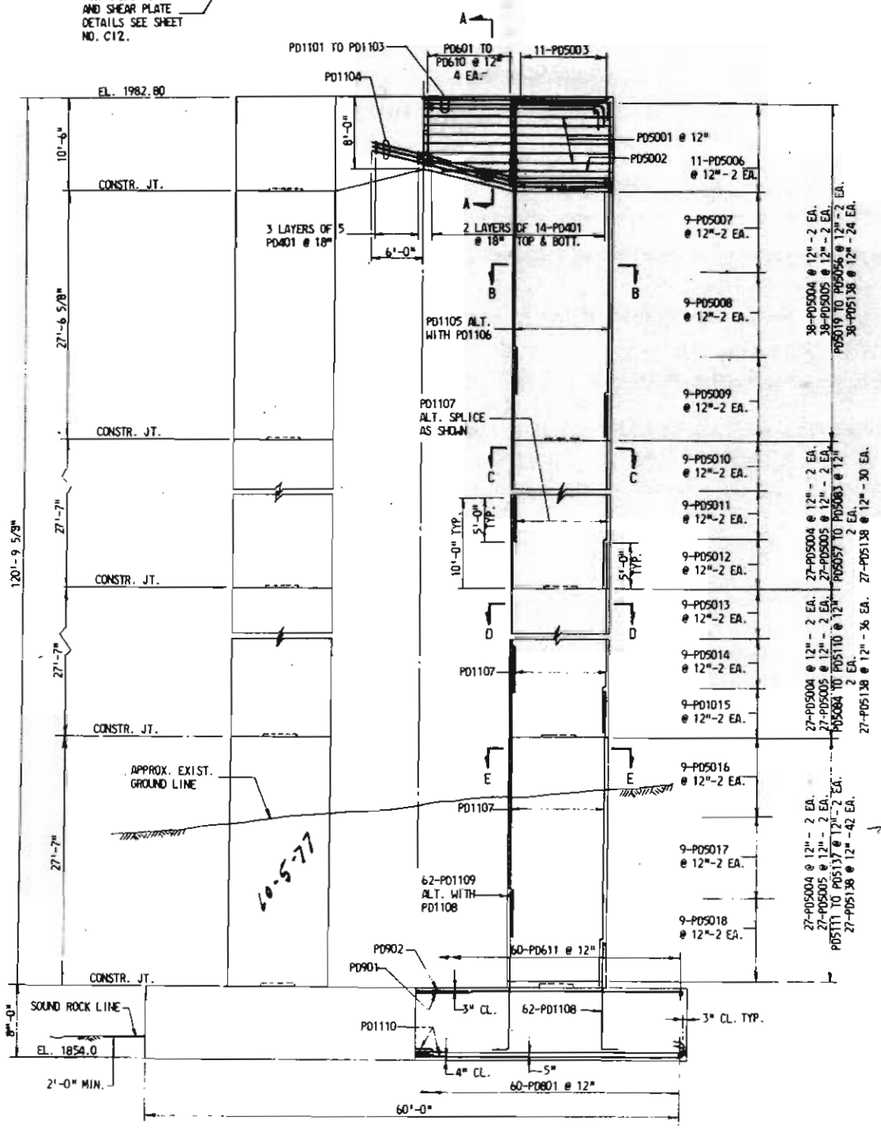

ELEVATION

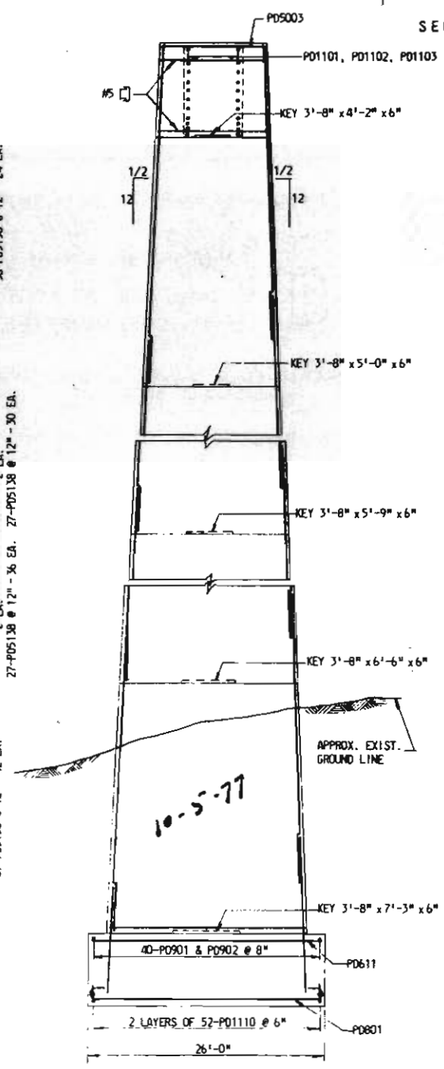

SIDE ELEVATION

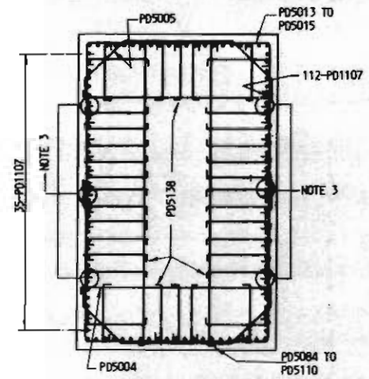

SECTION D-D

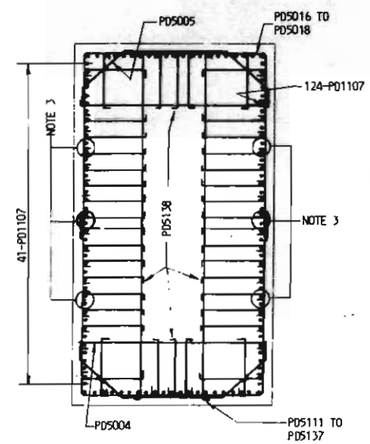

SECTION E-E

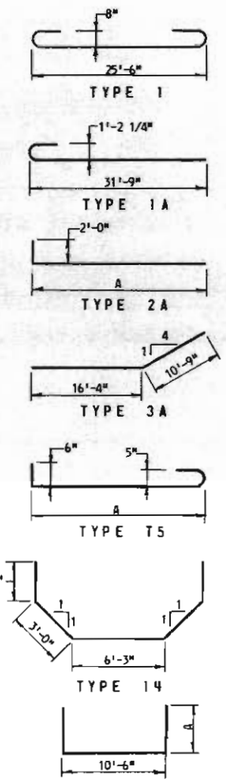

BAR SCHEDULE

BAR MARK	NO. OF BARS	LENGTH	WEIGHT (LBS.)	TYPE	DIMENSION A
PD401	142	7'-1"	672	T5	6'-0"
PD5001	12	41'-6"	519	STR.	
PD5002	4	17'-9"	74	STR.	
PD5003	22	11'-3"	258	STR.	
PD5004	476	11'-7"	5,751	T5	10'-6"
PD5005	476	15'-1"	7,488	14	
PD5006	44	24'-1"	1,105	17	6'-9 1/2"
PD5007-PD5018	36 EA. OF 12	24'-10" - 33'-1" 9" INCR.	13,048	17	7'-2" - 11'-3 1/2" 4 1/2" INCR.
PD5019-PD5056	4 EA. OF 38	12'-4 1/2"-15'-5 1/2" 1" INCR.	2,206	T5	11'-3 1/2"-14'-4 1/2" 1" INCR.
PD5057-PD5083	4 EA. OF 27	15'-7" - 17'-9" 1" INCR.	1,877	T5	14'-6" - 16'-8" 1" INCR.
PD5084-PD5110	4 EA. OF 27	17'-10 1/2"-20'-0 1/2" 1" INCR.	2,135	T5	16'-9 1/2"-18'-11 1/2" 1" INCR.
PD5111-PD5137	4 EA. OF 27	20'-2" - 22'-4" 1" INCR.	2,394	T5	19'-1" - 21'-3" 1" INCR.
PD5138	7656	4'-10"	38,595	T5	3'-9"
PD601-PD610	8 EA. OF 10	13'-7" - 15'-10" 3" INCR.	1,767	17A	7'-7" - 9'-10" 3" INCR.
PD611	60	25'-6"	2,298	STR.	
PD801	60	27'-4"	4,379	1	
PD901	40	29'-9"	4,046	STR.	
PD902	40	35'-7"	4,839	STR.	
PD1101-PD1103	10 EA. OF 3	45'-6" - 43'-10" 10" INCR.	7,119	17A	41'-6" - 39'-10" 10" INCR.
PD1104	60	27'-1"	8,634	3A	
PD1105	88	37'-6"	17,533	STR.	
PD1106	88	32'-6"	15,195	STR.	
PD1107	672	32'-7"	116,333	STR.	
PD1108	124	14'-7"	9,608	2A	12'-7"
PD1109	124	19'-7"	12,902	2A	17'-7"
PD1110	208	33'-4"	36,837	1A	

CONCRETE QUANTITY (C.Y.)	
PIER 4	2159.

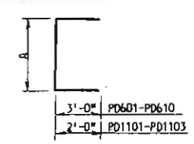

TYPE 17A

NOTES:

1. FOR GENERAL NOTES SEE SHEET NOS. C4 & C5.
2. LAP SPLICE FOR COLUMN TIES SHALL BE 1'-5" MIN.
3. COLUMN BARS CIRCLED IN SECTIONS C-C, D-D & E-E SHALL PROJECT ABOVE THE CONSTRUCTION JOINT, BUT SHALL NOT BE SPLICED.
4. THE FOOTING SHALL BE KEYED A MINIMUM OF 2" INTO SOUND ROCK HAVING A BEARING CAPACITY OF 20 KSF.

SCALE: 1/8" = 1'-0"

NO.	SHEET	DESCRIPTION	DATE	BY

REVISIONS

WEST VIRGINIA DEPARTMENT OF HIGHWAYS
CHARLESTON, WEST VIRGINIA
INTERSTATE ROUTE NO. 77

I-77 OVER BLUESTONE RIVER
BRIDGE NO. 3010
PIER 4

DESIGNED BY: W.M.D.
DRAWN BY: L.L., T.G.
CHECKED BY: M.K.Y.

GREINER ENGINEERING SCIENCES, INC.
CONSULTING ENGINEERS
BALTIMORE, MARYLAND
CHARLESTON, WEST VIRGINIA

DATE: NOV. 1975
SCALE: 1/4"=1'-0" & AS NOTED
SHEET C15

CONCRETE QUANTITY (C.Y.)	
PIER 5	106

PUBLIC ROADS DIV.	STATE DIST. NO.	STATE PROJ. NO.	FEDERAL PROJ. NO.	FISCAL YEAR	COUNTY	SHEET NO.	TOTAL SHEETS
W. VA.	10	328-77-17.42	I-77 2(36)17	1975	MERCER	C16	86

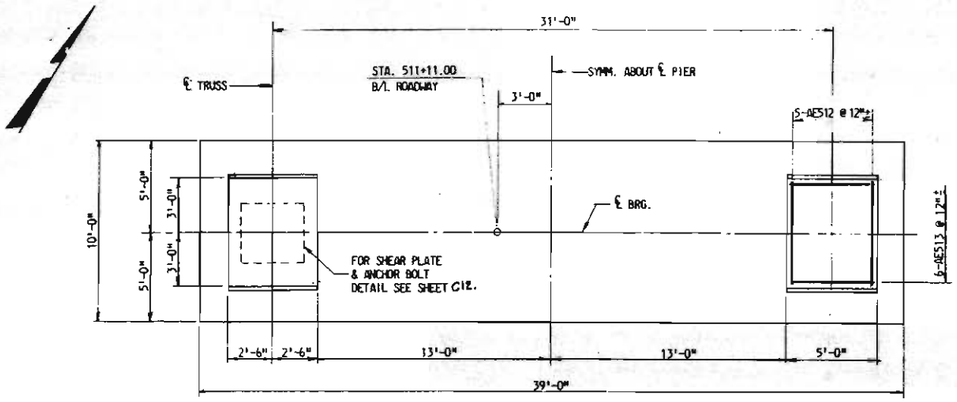

PLAN

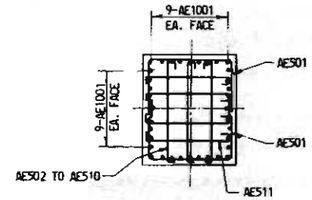

SECTION A-A

RE BAR SCHEDULE				
MARK	NO. OF BARS	LENGTH	WEIGHT (LBS.)	TYPE
RE401	1	9'-10"	7	STR.
RE501	15	9'-10"	154	STR.
RE601	1	10'-1"	15	STR.
RE801	1	14'-2"	38	STR.
RE901	2	16'-7"	113	STR.
RE1001	1	19'-9"	85	STR.
RE1101	47	23'-1"	5764	STR.

BAR SCHEDULE					
BAR MARK	NO. OF BARS	LENGTH	WEIGHT (LBS.)	TYPE	DIMENSION A
AE501	36	11'-10"	444	17	
AE502-AE510	6 EA. OF 9	6'-7"-6'-11" 1/2" INCR.	380	T-5	5'-6"-5'-10" 1/2" INCR.
AE511	72	5'-7"	419	T-5	4'-6"
AE512	10	5'-6"	57	STR.	
AE513	12	4'-6"	56	STR.	
AE601	80	9'-6"	1142	STR.	
AE901	40	38'-6"	5236	STR.	
AE1001	72	15'-9"	4880	2A	
AE1101	17	41'-8"	3763	1	38'-6"

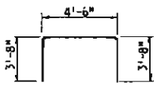

TYPE 17

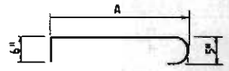

TYPE T-5

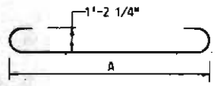

TYPE 1

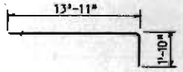

TYPE 2A

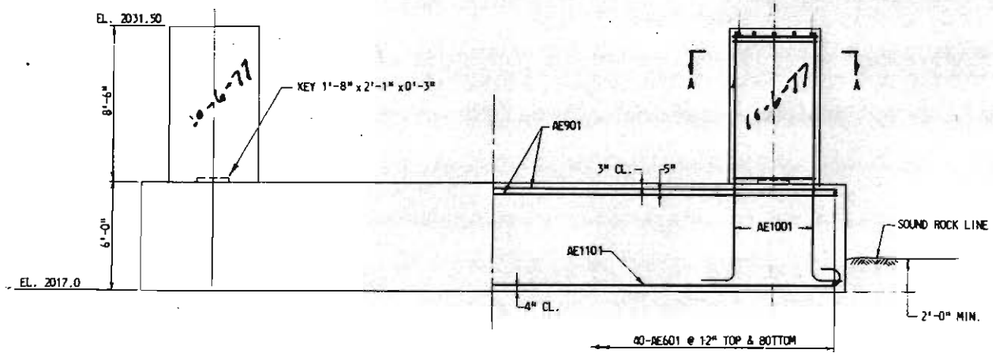

ELEVATION

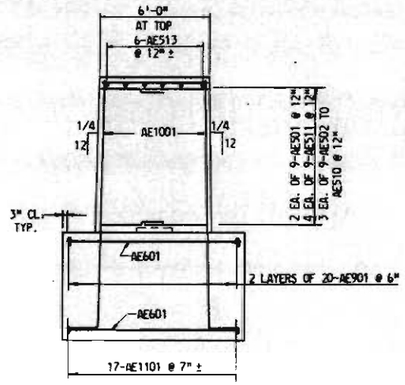

SIDE ELEVATION

NOTES:

1. FOR GENERAL NOTES SEE SHEET NOS. C4 & C5.
2. THE FOOTING SHALL BE KEYED A MINIMUM OF 2' INTO SOUND ROCK HAVING A BEARING CAPACITY OF 20 KSF.

NO.	SHEET	DESCRIPTION	DATE	BY

REVISIONS

WEST VIRGINIA DEPARTMENT OF HIGHWAYS
CHARLESTON, WEST VIRGINIA
INTERSTATE ROUTE NO. 77

I-77 OVER BLUESTONE RIVER
BRIDGE NO. 3010
PIER 5

DESIGNED BY: W.M.D.
DRAWN BY: L.L. & T.G.
CHECKED BY: M.K.Y. & K.M.D.

GREINER ENGINEERING SCIENCES, INC.
CONSULTING ENGINEERS
BALTIMORE, MARYLAND
CHARLESTON, WEST VIRGINIA

DATE: NOV. 1975
SCALE: 1/4" = 1'-0"
SHEET C16

PUBLIC ROADS DIV.	STATE DIST. NO.	STATE PROJ. NO.	FEDERAL PROJ. NO.	FISCAL YEAR	COUNTY	SHEET NO.	TOTAL SHEETS
W. VA.	10	328-77-17.42	I-77 206(17)		MERCER	C17	86

CONCRETE QUANTITY (S.Y.)	
N. APPROACH SLAB	98
S. APPROACH SLAB	115

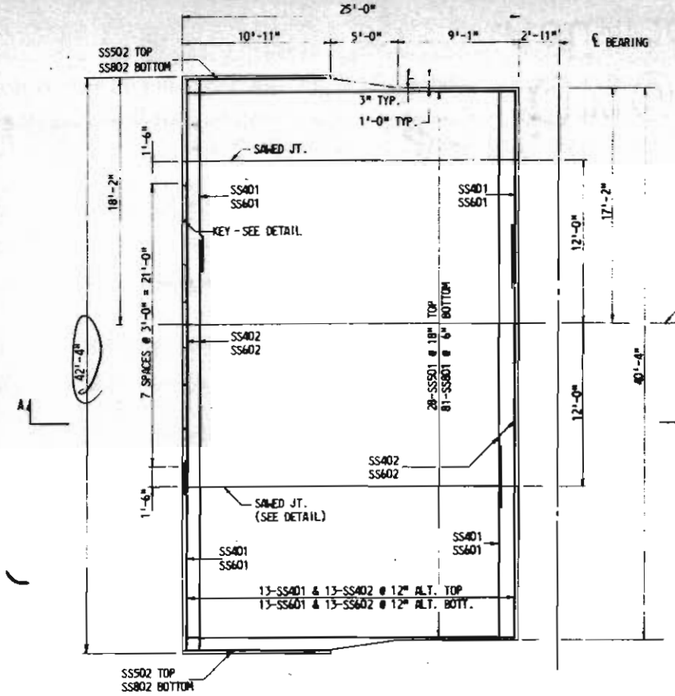

S. APPROACH SLAB
SCALE: 3/16" = 1'-0"

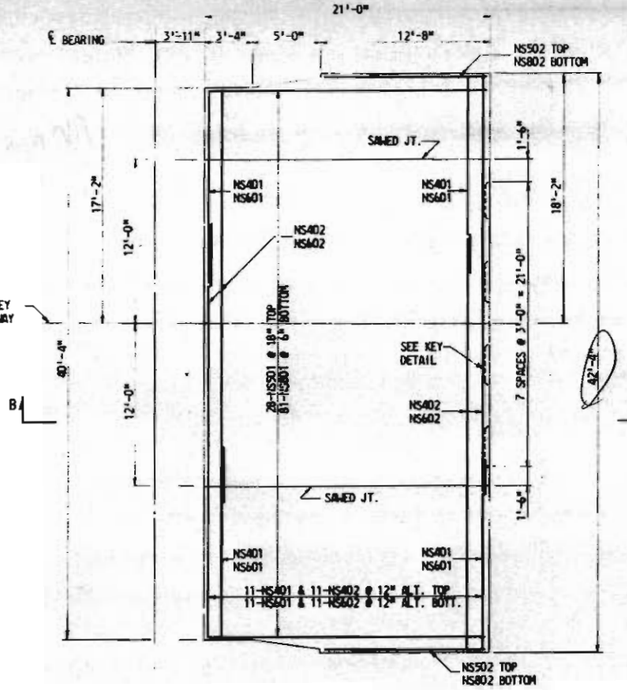

N. APPROACH SLAB
SCALE: 3/16" = 1'-0"

The 42'-4" width of both Approach slabs was a plan error Dean Chipps assit. Regional Engineer said To use 41'-5" from end of slab to where That dimension ties to Variable end post section. Keep 1" Joint all around. Pay all planned Re bars and adjust by lapping and moving 502 bars & 802 bars in, have Contractor splice 602's To fill in Void in variable section 12-6-77

BAR SCHEDULE					
	BAR MARK	NO. OF BARS	LENGTH	WEIGHT (LBS.)	TYPE
S. APPROACH SLAB	SS401	26	14'-0"	243	STR.
	SS402	26	29'-0"	504	STR.
	SS501	28	24'-6"	715	STR.
	SS502	2	10'-5"	22	STR.
	SS601	26	14'-0"	547	STR.
	SS602	26	29'-5"	1149	STR.
	SS801	81	24'-6"	5299	STR.
	SS802	2	10'-5"	56	STR.
N. APPROACH SLAB	NS401	22	14'-0"	206	STR.
	NS402	22	29'-0"	426	STR.
	NS501	28	20'-6"	599	STR.
	NS502	2	12'-2"	25	STR.
	NS601	22	14'-0"	463	STR.
	NS602	22	29'-5"	972	STR.
	NS801	81	20'-6"	4434	STR.
	NS802	2	12'-2"	65	STR.

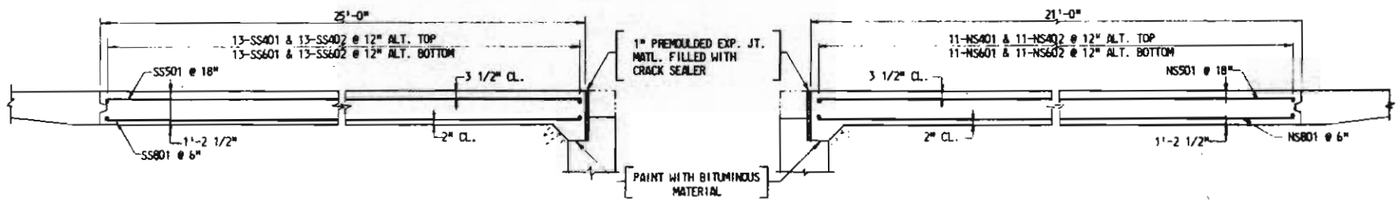

SECTION A-A
SCALE: 3/8" = 1'-0"

SECTION B-B
SCALE: 3/8" = 1'-0"

NOTES:

1. FOR GENERAL NOTES SEE SHEET NOS. C4 & C5.

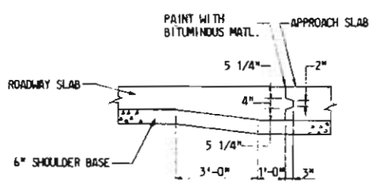

DETAIL OF APPROACH SLAB AND ROADWAY CONNECTION
SCALE: 3/8" = 1'-0"

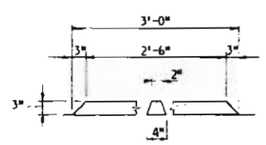

KEY DETAIL
SCALE: 3/4" = 1'-0"

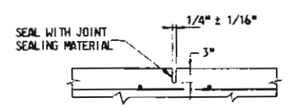

DETAIL OF SAWED LONGITUDINAL JOINT
SCALE: 3/4" = 1'-0"

NO.	SHEET	DESCRIPTION	DATE	BY

REVISIONS

WEST VIRGINIA DEPARTMENT OF HIGHWAYS
CHARLESTON, WEST VIRGINIA
INTERSTATE ROUTE NO. 77

I-77 OVER BLUESTONE RIVER
BRIDGE NO. 3010
APPROACH SLAB DETAILS

DESIGNED BY: M.K.Y.
DRAWN BY: L.M.L.
CHECKED BY: W.M.D.

GREINER ENGINEERING SCIENCES, INC.
CONSULTING ENGINEERS
BALTIMORE, MARYLAND
CHARLESTON, WEST VIRGINIA

DATE: NOV. 1975
SCALE: AS SHOWN
SHEET C17

PUBLIC ROADS DIV.	STATE DIST. NO.	STATE PROJ. NO.	FEDERAL PROJ. NO.	FISCAL YEAR	COUNTY	SHEET NO.	TOTAL SHEETS
W. VA.	10	328-77-17.42	I-77 2(3)17		MERCER	C18	86

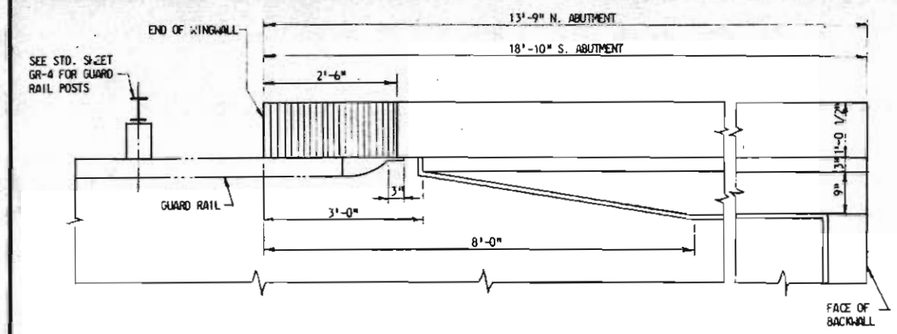

PLAN

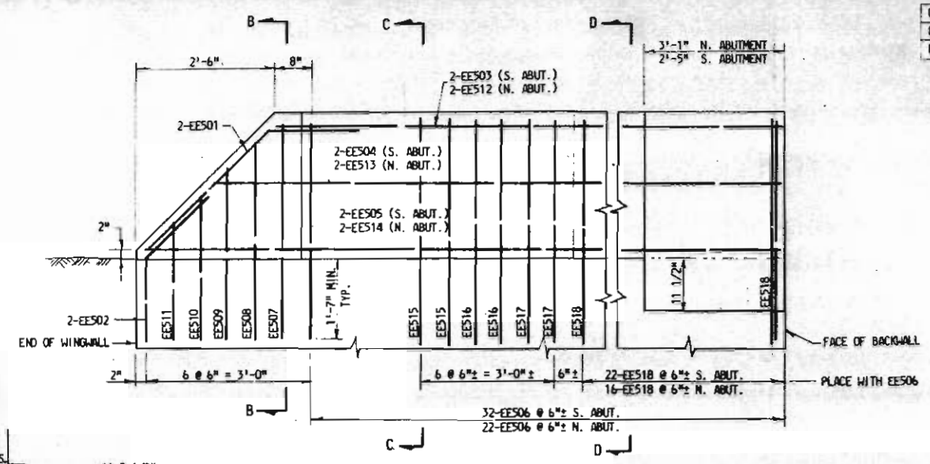

CONCRETE QUANTITY (C.Y.)	
END POST S. ABUT.	4.06
END POST N. ABUT.	2.49

BAR SCHEDULE

BAR MARK	TYPE	NO. OF BARS S. ABUT.	NO. OF BARS N. ABUT.	TOTAL	LENGTH	TOTAL WT. (LBS.)
EE501	19	4	4	8	4'-10"	40
EE502	19	4	4	8	3'-4"	28
EE503	STR.	4	-	4	15'-11"	66
EE504	STR.	4	-	4	17'-2"	72
EE505	STR.	4	-	4	18'-5"	77
EE506	15	64	44	108	8'-9 1/2"	990
EE507	17	2	2	4	8'-10"	37
EE508	17	2	2	4	8'-2"	34
EE509	17	2	2	4	7'-2"	30
EE510	17	2	2	4	6'-2"	26
EE511	17	2	2	4	5'-2"	22
EE512	STR.	-	4	4	10'-11"	46
EE513	STR.	-	4	4	12'-2"	51
EE514	STR.	-	4	4	13'-5"	56
EE515	22	4	4	8	5'-0 1/2"	42
EE516	22	4	4	8	5'-1"	42
EE517	22	4	4	8	5'-1 1/2"	43
EE518	22	44	24	68	5'-1 1/2"	363

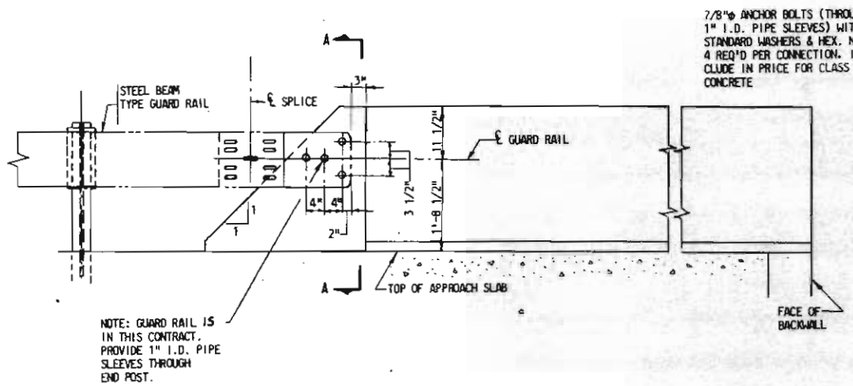

ELEVATION

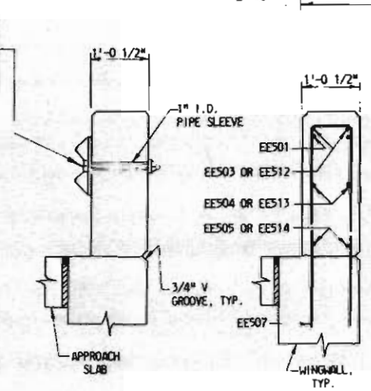

SECTION A-A

SECTION B-B

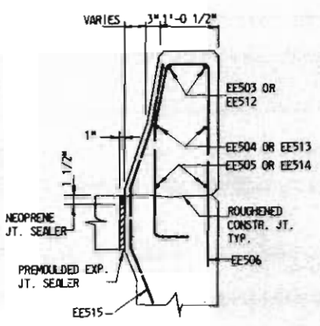

SECTION C-C

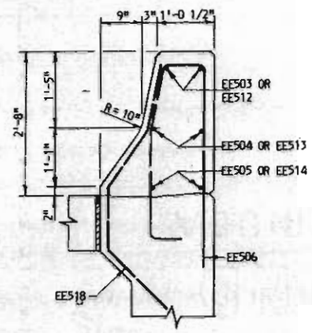

SECTION D-D

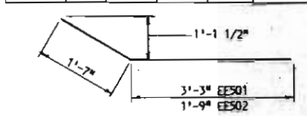

TYPE 19

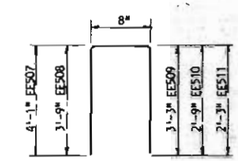

TYPE 17

DIMENSIONS - TYPE 22			
BAR MK	A	B	C
EE515	4"	1'-2"	4 1/2"
EE516	6"	1'-2 1/2"	7 1/2"
EE517	8"	1'-3"	10 1/2"
EE518	9"	1'-3"	11 1/2"

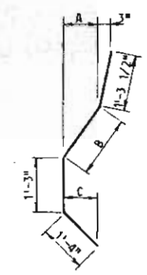

TYPE 22

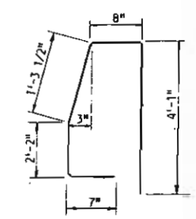

TYPE 15

NOTES:

1. FOR GENERAL NOTES SEE SHEET C4 & C5.
2. WINGWALL REINFORCING NOT SHOWN IN SECTIONS.
3. END POST REINFORCING DETAILED ON THIS SHEET SHALL BE EPOXY COATED ("EE" DENOTES EPOXY COATED REINFORCING).

NO.	SHEET	DESCRIPTION	DATE	BY

REVISIONS

WEST VIRGINIA DEPARTMENT OF HIGHWAYS
CHARLESTON, WEST VIRGINIA
INTERSTATE ROUTE NO. 77

I-77 OVER BLUESTONE RIVER
BRIDGE NO. 3010
END POST DETAILS

DESIGNED BY: M.K.Y.
DRAWN BY: T.G.
CHECKED BY: W.H.D.

GREINER ENGINEERING SCIENCES, INC.
CONSULTING ENGINEERS
BALTIMORE, MARYLAND
CHARLESTON, WEST VIRGINIA

DATE: NOV. 1975
SCALE: 3/4" = 1'-0"
SHEET C18

PUBLIC ROADS DIV.	STATE DIST. NO.	STATE PROJ. NO.	FEDERAL PROJ. NO.	FISCAL YEAR	COUNTY	SHEET NO.	TOTAL SHEETS
W. VA.	10	328-77-17.42	I-77 20917		MERCER	C19	86

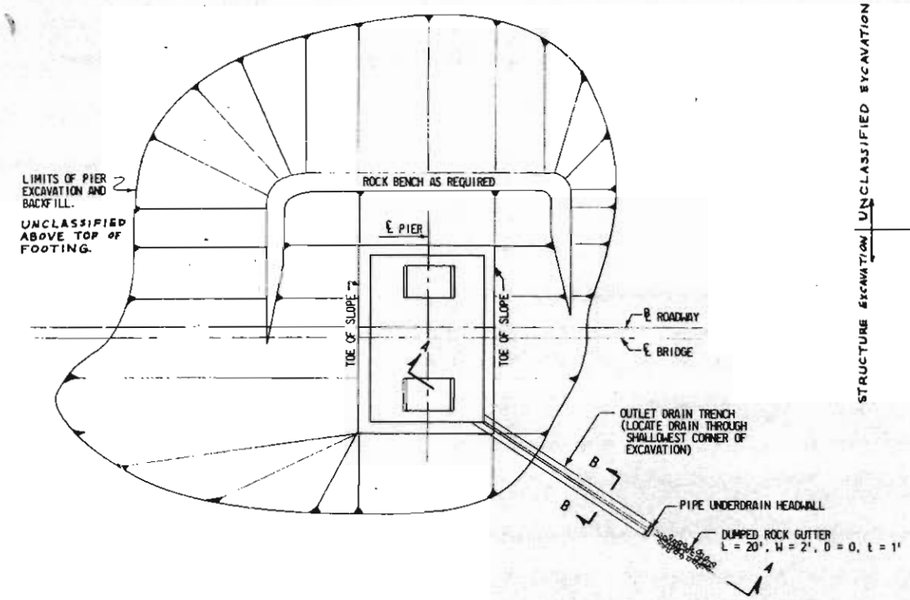

PLAN
SCALE: 1" = 20'-0"

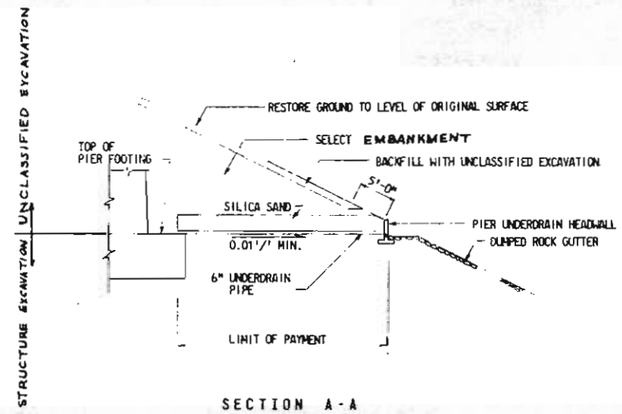

SECTION A-A
SCALE: 1" = 20'-0"

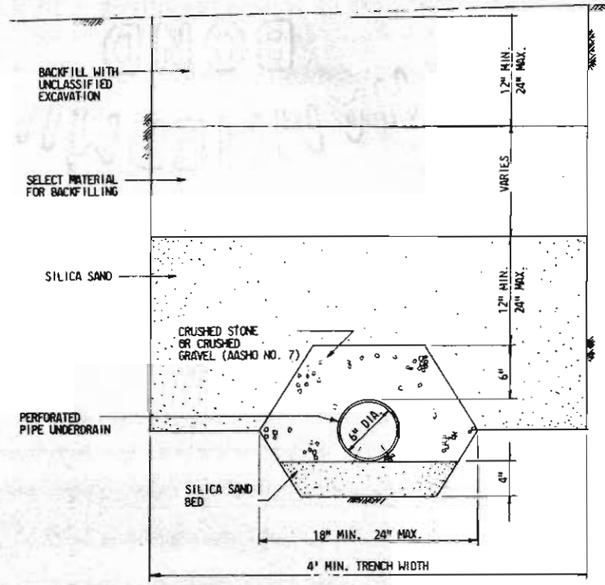

SECTION B-B
SCALE: 1 1/2" = 1'-0"

TYPICAL EXCAVATION AND OUTLET DRAIN
FOR PIERS #2, #3 AND #4

Deleted

LOCATION	ITEM 601-2 CLASS B CONC. (C.Y.)	ITEM 606-22 CRUSHED STONE, CRUSHED GRAVEL, OR SILICA SAND FOR UNDERDRAINS (C.Y.)	ITEM 606-25 6" UNDERDRAIN PIPE (L.F.)	ITEM 633-3 DUMPED ROCK GUTTER (C.Y.)
PIER 2	~~0.1~~	~~18~~	~~40~~	~~2~~
PIER 3	0.1	38	86	-
PIER 4	0.1	21	48	-
TOTALS	0.3	77	174	2

100' of underdrain Pipe, Filter material, and headwall added @ Pier 4 approved by Wayne Musick D-10 operations Engineer on 10-13-78

NOTES:

1. FOR GENERAL NOTES, SEE SHEET NOS. C4 & C5.

NO.	SHEET	DESCRIPTION	DATE	BY

REVISIONS

WEST VIRGINIA DEPARTMENT OF HIGHWAYS
CHARLESTON, WEST VIRGINIA
INTERSTATE ROUTE NO. 77

I-77 OVER BLUESTONE RIVER
BRIDGE NO. 3010
MISCELLANEOUS DETAILS

DESIGNED BY: F.P.F.
DRAWN BY: L.M.L.
CHECKED BY: R.P.B.

GREINER ENGINEERING SCIENCES, INC.
CONSULTING ENGINEERS
BALTIMORE, MARYLAND
CHARLESTON, WEST VIRGINIA

DATE: NOV. 1975
SCALE: AS SHOWN
SHEET C19

PUBLIC ROADS DIV.	STATE DIST. NO.	STATE PROJ. NO.	FEDERAL PROJ. NO.	FISCAL YEAR	COUNTY	SHEET NO.	TOTAL SHEETS
W. VA.	10	328-77-17.42	I-77 203917		MERCER	C20	86

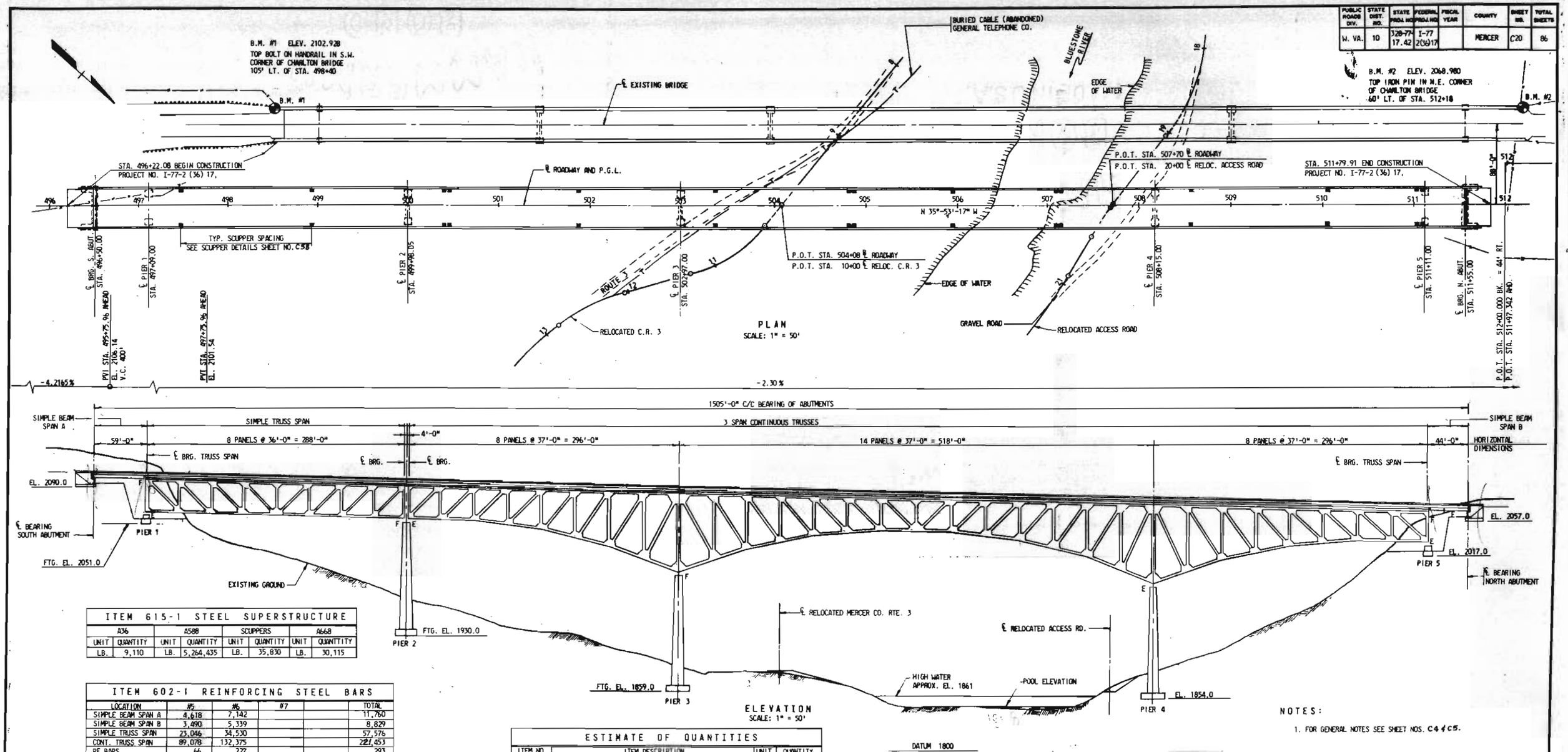

ITEM 615-1 STEEL SUPERSTRUCTURE							
A36		A588		SCUPPERS		A668	
UNIT	QUANTITY	UNIT	QUANTITY	UNIT	QUANTITY	UNIT	QUANTITY
LB.	9,110	LB.	5,264,435	LB.	35,830	LB.	30,115

ITEM 602-1 REINFORCING STEEL BARS					
LOCATION	#5	#6	#7		TOTAL
SIMPLE BEAM SPAN A	4,618	7,142			11,760
SIMPLE BEAM SPAN B	3,490	5,339			8,829
SIMPLE TRUSS SPAN	23,046	34,530			57,576
CONT. TRUSS SPAN	89,078	132,375			221,453
RE BARS	66	227			293
TOTAL	120,298	179,613			299,911

ITEM 602-1 (E) EPOXY COATED REINFORCING STEEL BARS					
LOCATION	#5	#6	#7		TOTAL
SIMPLE BEAM SPAN A	5,690	4,641	3,930		14,261
SIMPLE BEAM SPAN B	4,407	3,515	2,976		10,898
SIMPLE TRUSS SPAN	26,537	22,394	18,963		67,894
CONT. TRUSS SPAN	100,401	85,974	72,799		259,174
SUBTOTAL	137,035	116,524	98,668		352,227
RE BARS			123		123
TOTAL	137,035	116,524	98,791		352,350

ESTIMATE OF QUANTITIES			
ITEM NO.	ITEM DESCRIPTION	UNIT	QUANTITY
601-8	CONCRETE BRIDGE DECK	S.F.	67,020
601-9	CONCRETE BRIDGE PARAPET	L.F.	3,007
602-1	REINFORCING STEEL BARS	LB.	299,911
602-1(E)	EPOXY COATED REINFORCING STEEL BARS	LB.	352,350
615-1	STEEL SUPERSTRUCTURE	L.S.	LUMP SUM
	PREFABRICATED MODULAR EXPANSION DAMS		
624-13	NORTH ABUTMENT D1460	L.F.	44
624-13	SOUTH ABUTMENT & PIER 2 D780	L.F.	88
624-13	STRIP SEAL EXPANSION JOINT SA400	L.F.	220

NOTES:

1. FOR GENERAL NOTES SEE SHEET NOS. C4 & C5.

NO.	SHEET	DESCRIPTION	DATE	BY

REVISIONS

WEST VIRGINIA DEPARTMENT OF HIGHWAYS
CHARLESTON, WEST VIRGINIA
INTERSTATE ROUTE NO. 77

I-77 OVER BLUESTONE RIVER
BRIDGE NO. 3010
GENERAL PLAN AND ELEVATION - SUPERSTRUCTURE

DESIGNED BY: H.K.
DRAWN BY: K.M. & O.A.B.
CHECKED BY: W.M.D.

GREINER ENGINEERING SCIENCES, INC.
CONSULTING ENGINEERS
BALTIMORE, MARYLAND
CHARLESTON, WEST VIRGINIA

DATE: NOV. 1975
SCALE: 1" = 50'
SHEET C20

PUBLIC ROADS DIV.	STATE DIST. NO.	STATE PROJ. NO.	FEDERAL PROJ. NO.	FISCAL YEAR	COUNTY	SHEET NO.	TOTAL SHEETS
W. VA.	10	328-77-17.42	I-77 206(1)17		MERCER	C21	86

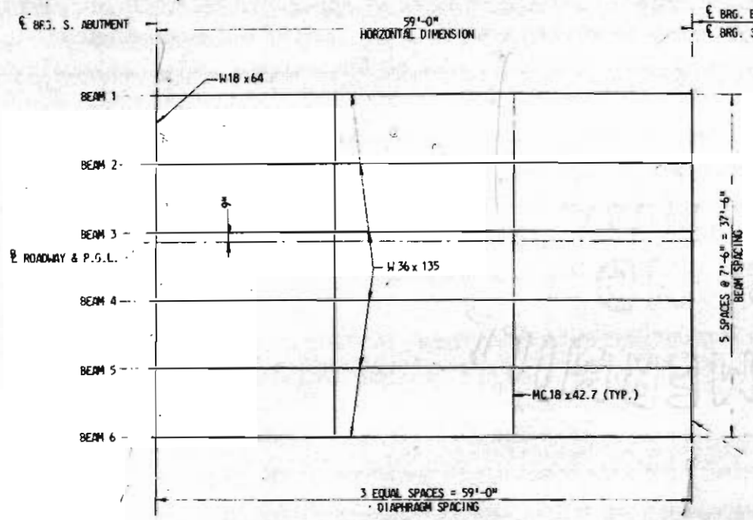

FRAMING PLAN
SCALE: 1/8" = 1'-0"

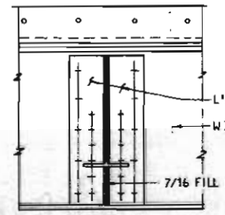

SECTION D-D
SCALE: 3/4" = 1'-0"

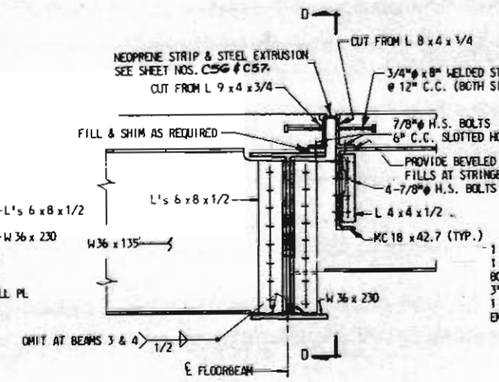

BEAM CONNECTION & FLOORBREAK AT PIER 1
SCALE: 3/4" = 1'-0"

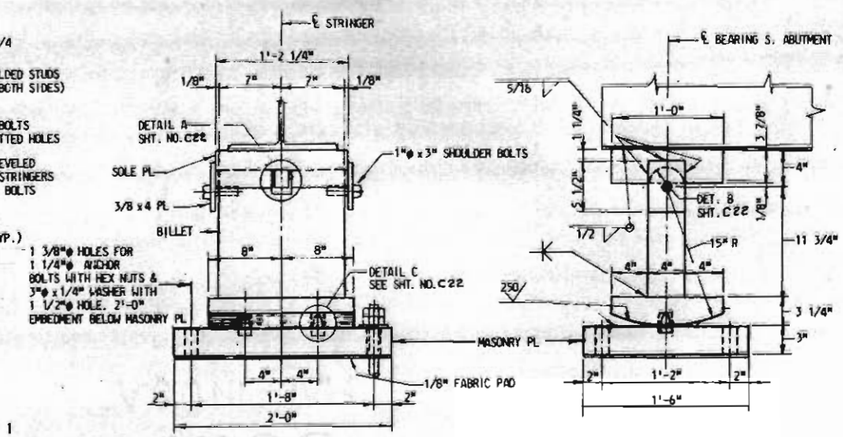

EXPANSION SHOE
SOUTH ABUTMENT
SCALE: 1 1/2" = 1'-0"

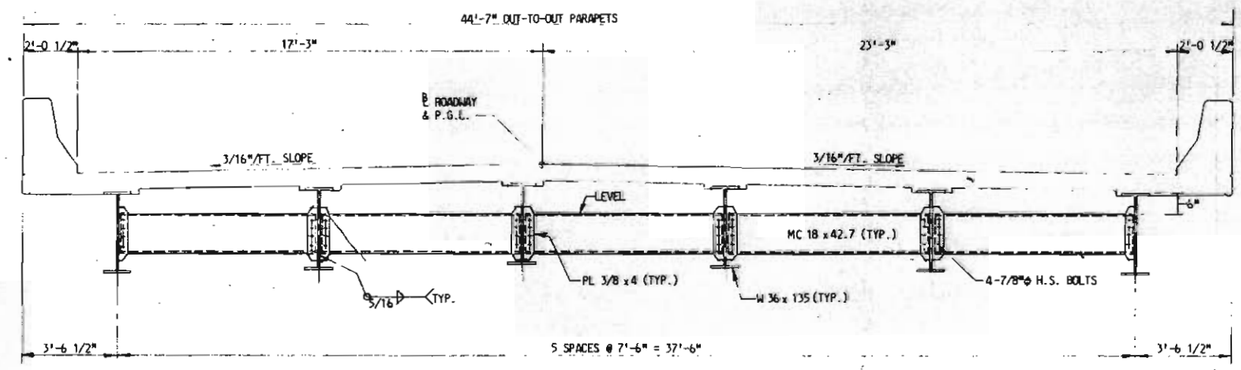

CROSS SECTION
SCALE: 3/8" = 1'-0"

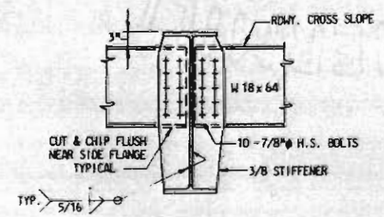

SECTION B-B
SCALE: 3/4" = 1'-0"

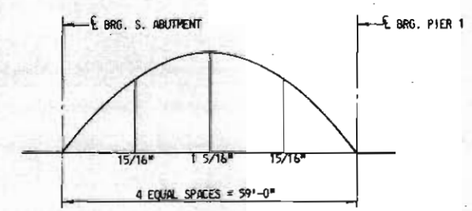

SPAN A - CAMBER DIAGRAM

Note: There is a change in design of Shoes (see Letter 3-28-77 in Files)

NOTES:

1. FOR GENERAL NOTES, SEE SHEET NOS. C4 & C5.
2. BEAM WEBS TO BE VERTICAL.
3. FOR SHEAR PLATE DETAILS & ANCHOR BOLT DETAILS, SEE SHEET NO. C12.

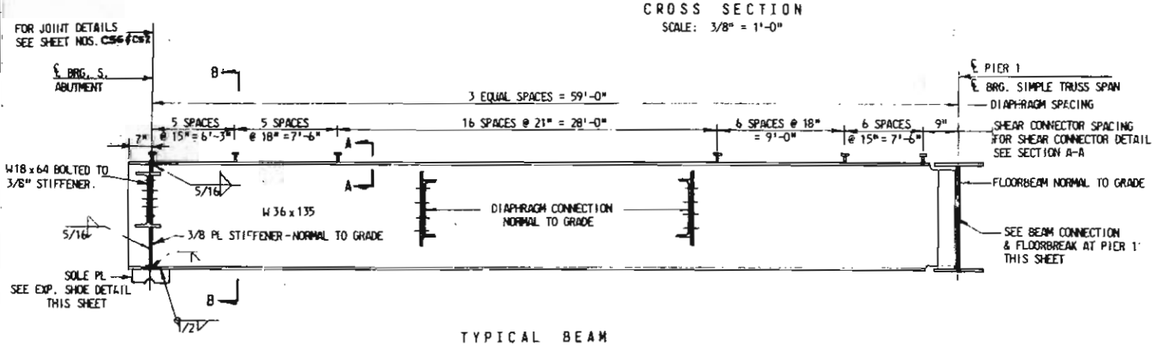

TYPICAL BEAM
SCALE: NONE

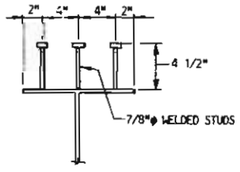

SECTION A-A
SCALE: NONE

NO.	SHEET	DESCRIPTION	DATE	BY

REVISIONS

WEST VIRGINIA DEPARTMENT OF HIGHWAYS
CHARLESTON, WEST VIRGINIA
INTERSTATE ROUTE NO. 77

I-77 OVER BLUESTONE RIVER
BRIDGE NO. 3010
FRAMING PLAN & DETAILS - SIMPLE BEAM SPAN A

DESIGNED BY: H.L.T.
DRAWN BY: K.F.M.
CHECKED BY: H.L.T.

GREINER ENGINEERING SCIENCES, INC.
CONSULTING ENGINEERS
BALTIMORE, MARYLAND
CHARLESTON, WEST VIRGINIA

DATE: NOV. 1975
SCALE: AS NOTED
SHEET C21

PUBLIC ROADS DIV.	STATE DIST. NO.	STATE PROJ. NO.	FEDERAL PROJ. NO.	FISCAL YEAR	COUNTY	SHEET NO.	TOTAL SHEETS
W. VA.	10	328-77-17.42	I-77 206(17)		MERCER	C22	86

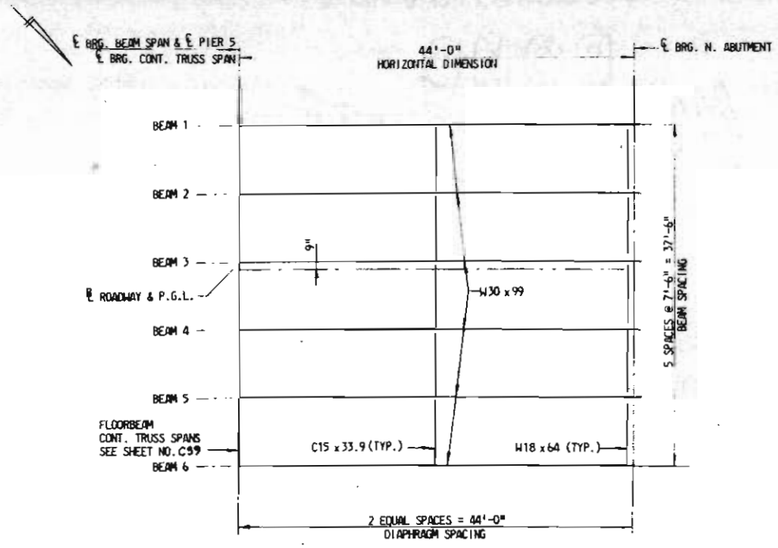

FRAMING PLAN
SCALE: 1/8" = 1'-0"

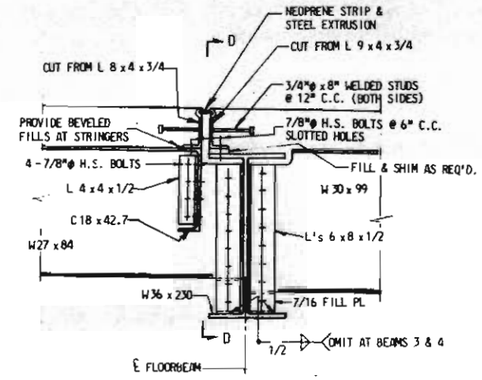

BEAM CONNECTION & FLOORBREAK AT PIER 5
SCALE: 3/4" = 1'-0"

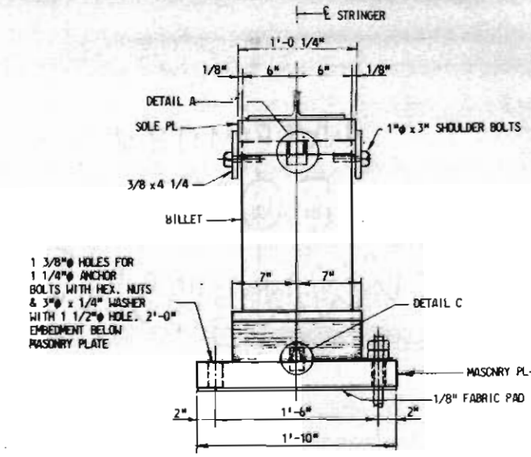

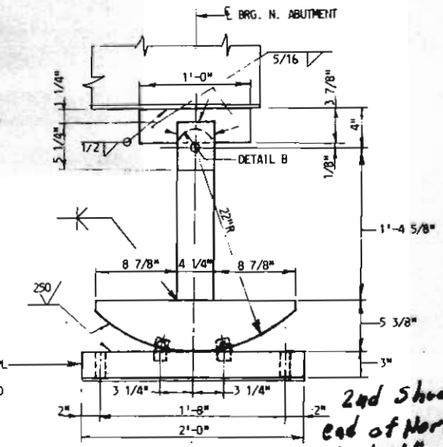

EXPANSION SHOE
NORTH ABUTMENT
SCALE: 1 1/2" = 1'-0"

2nd Shoe from west end of North Abut. left at 1/2" off of proj vertical alignment by permission of Joe Darnell Design Div. 9-20-78

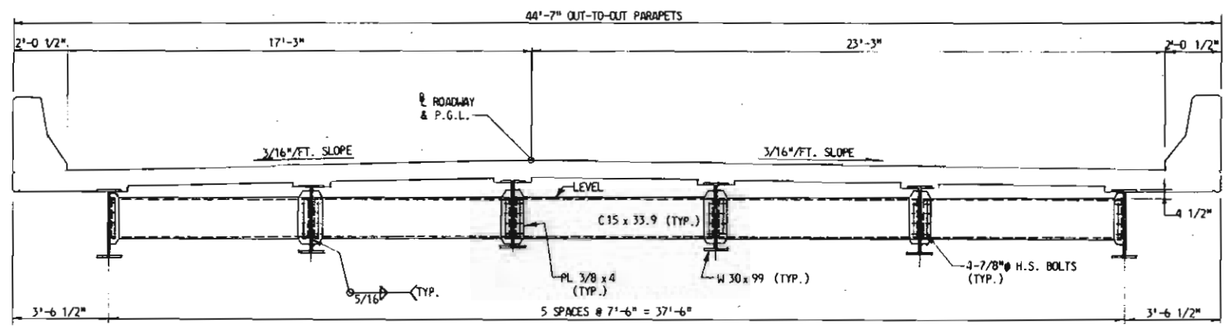

CROSS SECTION
SCALE: 3/8" = 1'-0"

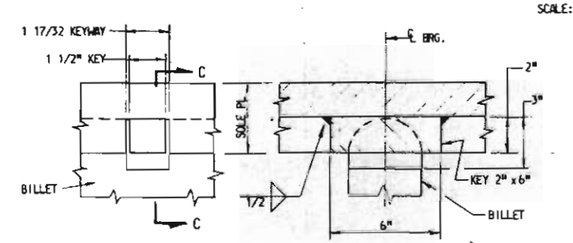

DETAIL A
SCALE: NONE

SECTION C-C

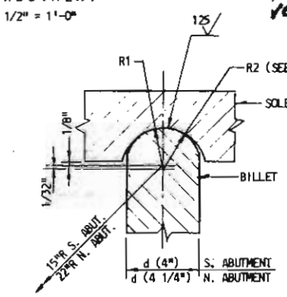

DETAIL B
SCALE: NONE

R1 (BILLET) d/2 + 1/16"
R2 (SOLE PL) d/2 + 3/32"

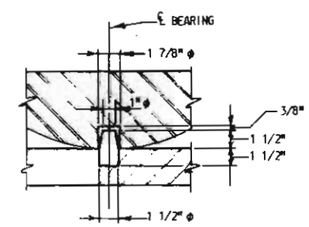

DETAIL C
SCALE: 3" = 1'-0"

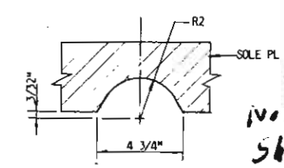

DETAIL D
(N. ABUTMENT ONLY)
SCALE: NONE

Note: Change in Shoe design See 3-28-77 Letter in Files

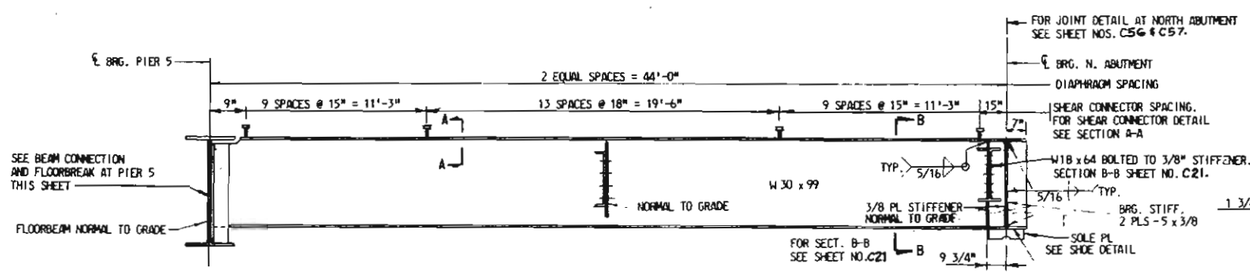

TYPICAL BEAM
NO SCALE

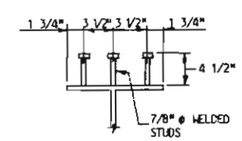

SECTION A-A
NO SCALE

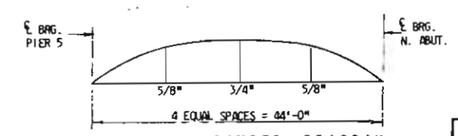

SPAN B - CAMBER DIAGRAM
SCALE: NONE

NOTES:

1. FOR GENERAL NOTES, SEE SHEET NOS. C4 & C5.
2. BEAM WEBS TO BE VERTICAL.
3. FOR SHEAR PLATE DETAILS & ANCHOR BOLT DETAILS, SEE SHEET NO. C12.
4. FOR SECTION D-D, SEE SHEET NO. C21.

NO.	SHEET	DESCRIPTION	DATE	BY

REVISIONS

WEST VIRGINIA DEPARTMENT OF HIGHWAYS
CHARLESTON, WEST VIRGINIA
INTERSTATE ROUTE NO. 77

I-77 OVER BLUESTONE RIVER
BRIDGE NO. 3010
FRAMING PLAN & DETAILS - SIMPLE BEAM SPAN B

DESIGNED BY: H.L.T.
DRAWN BY: K.F.M.
CHECKED BY: H.L.T.

GREINER ENGINEERING SCIENCES, INC.
CONSULTING ENGINEERS
BALTIMORE, MARYLAND
CHARLESTON, WEST VIRGINIA

DATE: NOV. 1975
SCALE: AS NOTED
SHEET C22

PUBLIC ROADS DIV.	STATE DIST. NO.	STATE PROJ. NO.	FEDERAL PROJ. NO.	FISCAL YEAR	COUNTY	SHEET NO.	TOTAL SHEETS
W. VA.	10	328-77 17,42	I-77 206)17		MERCER	C23	86

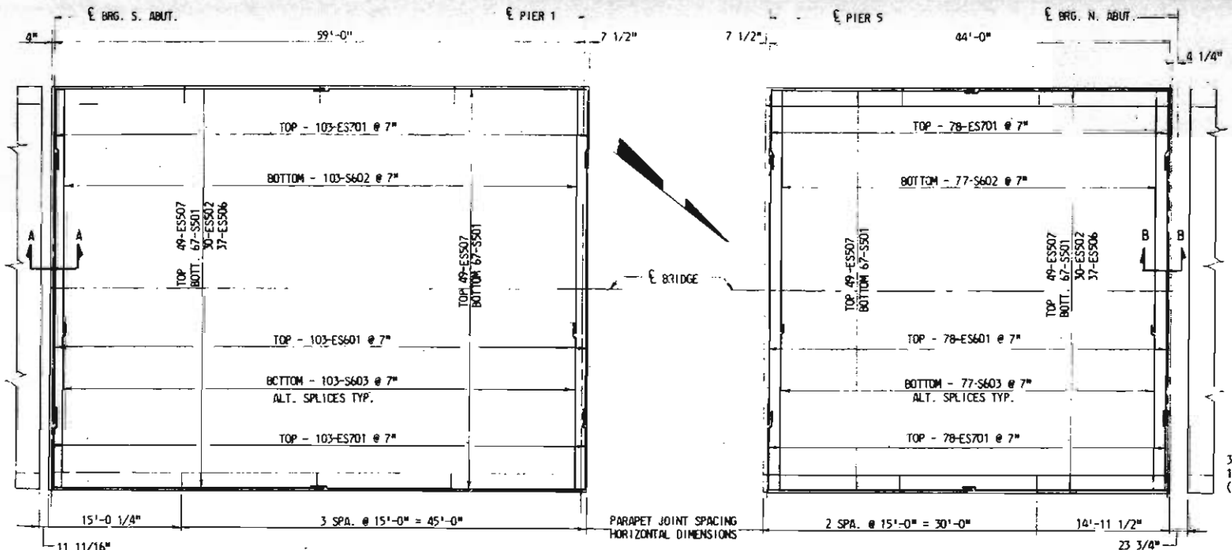

PLAN
BEAM SPAN A
SCALE: 1/8" = 1'-0"

PLAN
BEAM SPAN B
SCALE: 1/8" = 1'-0"

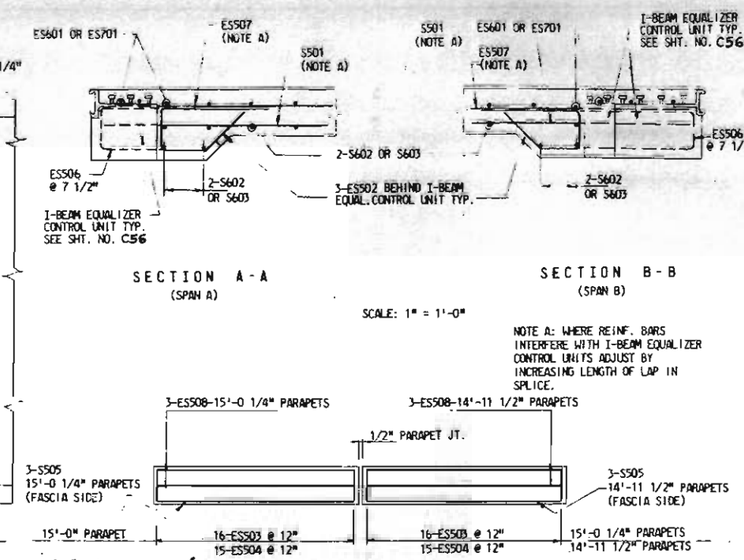

SECTION A-A
(SPAN A)

SECTION B-B
(SPAN B)

SCALE: 1" = 1'-0"

NOTE A: WHERE REINF. BARS INTERFERE WITH I-BEAM EQUALIZER CONTROL UNITS ADJUST BY INCREASING LENGTH OF LAP IN SPLICE.

PARAPET PLAN
SCALE: NONE

Const. Joint Placed 5' South of North Abut. Dam
This was Approved by Joe Darnell Design Division 9-29-78

* "ES" DENOTES EPOXY COATED REINFORCING BARS.

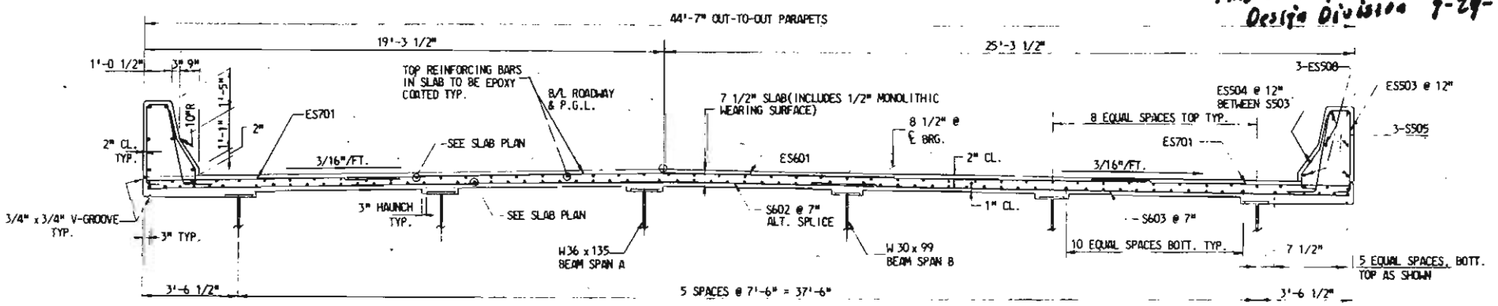

TYPICAL CROSS SECTION
SCALE: 3/8" = 1'-0"

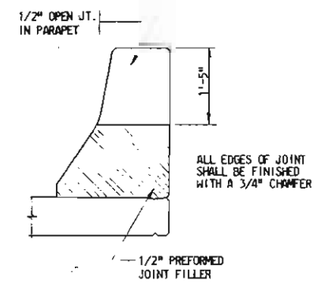

PARAPET DETAIL
SCALE: 3/4" = 1'-0"

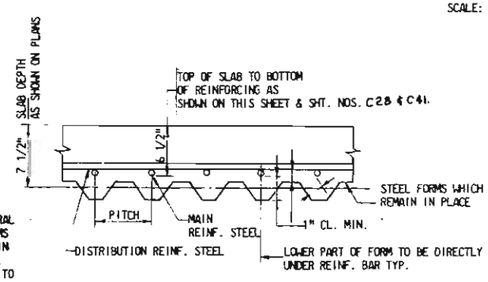

STAY-IN-PLACE FORMS
SCALE: 1 1/2" = 1'-0"

NOTE: NO WELDING OF THESE FORMS TO STRUCTURAL MEMBERS WILL BE PERMITTED. THESE FORMS SHALL BE VERTICALLY ADJUSTED TO ATTAIN LINE AND GRADE REQUIRED BY THE PLANS. ANY ADDITIONAL CONCRETE REQUIRED DUE TO THE USE OF S.I.P. FORMS WILL NOT BE MEASURED FOR PAYMENT. THE MIN. THICKNESS OF S.I.P. FORMS SHALL BE 20 GAGE. FORMS SHALL BE IN ACCORDANCE WITH SPECIAL PROVISIONS.

NOTES:

1. FOR GENERAL NOTES SEE SHEET NOS. C4 & C5.
2. FOR EXPANSION DAM & SLAB JOINT DETAILS SEE SHEET NOS. C56 & C57.
3. WHERE REINFORCING BARS INTERFERE WITH THE PLACEMENT OF SCUPPERS, THE BARS SHALL BE CUT AS APPROVED BY THE ENGINEER.

BAR SCHEDULE

	MARK	NO. OF BARS	LENGTH	WEIGHT (LBS.)	TYPE
BEAM SPAN A	S501	134	30'-5"	4251	STR.
	ES502*	30	5'-0"	156	C
	ES503*	128	9'-0"	1202	A
	ES504*	120	5'-0 1/2"	631	B
	S505	24	14'-7 1/2"	367	STR.
	ES506*	37	5'-10"	225	C
	ES507*	98	30'-5"	3109	STR.
	ES508*	24	14'-7 1/2"	367	STR.
	ES601*	103	30'-0"	4641	STR.
	S602	103	26'-10"	4151	STR.
	S603	103	19'-4"	2991	STR.
	ES701*	206	9'-4"	3930	STR.
BEAM SPAN B	S501	134	23'-0"	3215	STR.
	ES502*	30	5'-0"	156	C
	ES503*	96	9'-0"	901	A
	ES504*	90	5'-0 1/2"	473	B
	S505	18	14'-7 1/2"	275	STR.
	ES506*	37	6'-6"	251	C
	ES507*	98	23'-0"	2351	STR.
	ES508*	18	14'-7 1/2"	275	STR.
	ES601*	78	30'-0"	3515	STR.
	S602	77	26'-10"	3103	STR.
	S603	77	19'-4"	2236	STR.
	ES701*	156	9'-4"	2976	STR.

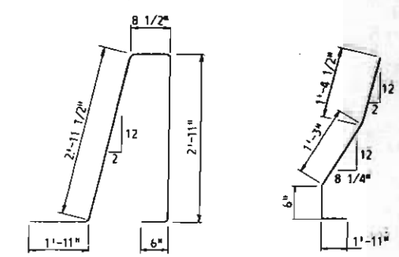

TYPE A

TYPE B

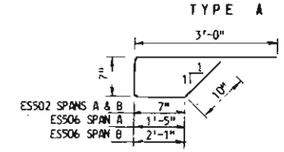

TYPE C

WEST VIRGINIA DEPARTMENT OF HIGHWAYS
CHARLESTON, WEST VIRGINIA
INTERSTATE ROUTE NO. 77

I-77 OVER BLUESTONE RIVER
BRIDGE NO. 3010
CONCRETE DECK DETAILS - BEAM SPANS A & B

NO.	SHEET	DESCRIPTION	DATE	BY

REVISIONS

DESIGNED BY: H.L.T.
DRAWN BY: K.L.M., L.M.L.
CHECKED BY: M.K.Y.

GREINER ENGINEERING SCIENCES, INC.
CONSULTING ENGINEERS
BALTIMORE, MARYLAND
CHARLESTON, WEST VIRGINIA

DATE: NOV. 1975
SCALE: AS NOTED
SHEET C23

K&E BALTIMORE 17 X 17 PHOENIX NO. 3005

PUBLIC ROADS DIV.	STATE DIST. NO.	STATE PROJ. NO.	FEDERAL PROJ. NO.	FISCAL YEAR	COUNTY	SHEET NO.	TOTAL SHEETS
W. VA.	10	328-77-17.42	I-77 206917	-	MERCER	C 24	86

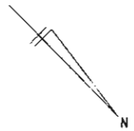

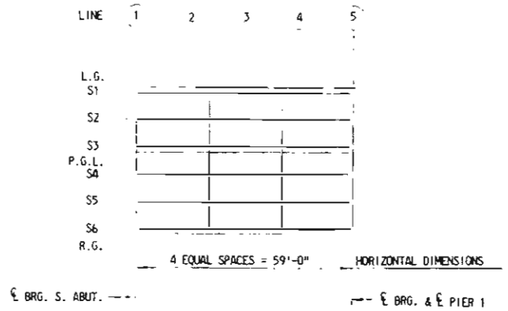

BEAM SPAN-A

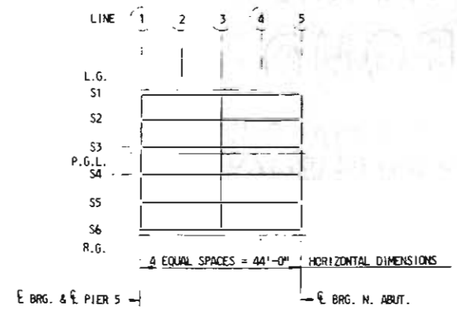

BEAM SPAN-B

TOP OF SLAB ELEVATIONS AND DEFLECTIONS (IN FEET)

LINE	1	2	3	4	5
LT. GUTTER LINE	2104.55	2104.13	2103.71	2103.31	2102.92
STRINGER 1	2104.57	2104.15	2103.74	2103.33	2102.94
STRINGER 2	2104.69	2104.27	2103.85	2103.45	2103.06
STRINGER 3	2104.81	2104.38	2103.97	2103.57	2103.18
P.G.L.	2104.82	2104.39	2103.98	2103.58	2103.19
STRINGER 4	2104.71	2104.29	2103.88	2103.47	2103.08
STRINGER 5	2104.60	2104.17	2103.76	2103.36	2102.97
STRINGER 6	2104.48	2104.06	2103.64	2103.24	2102.85
RT. GUTTER LINE	2104.45	2104.03	2103.62	2103.22	2102.83
D.L. DEFLECTIONS					
SPAN A STRINGER 1-6	0.00	0.07	0.10	0.07	0.00

TOP OF SLAB ELEVATIONS AND DEFLECTIONS (IN FEET)

LINE	1	2	3	4	5
LT. GUTTER LINE	2070.57	2070.31	2070.06	2069.81	2069.55
STRINGER 1	2070.59	2070.34	2070.08	2069.83	2069.58
STRINGER 2	2070.71	2070.45	2070.20	2069.95	2069.69
STRINGER 3	2070.82	2070.57	2070.32	2070.06	2069.81
P.G.L.	2070.83	2070.58	2070.33	2070.08	2069.82
STRINGER 4	2070.73	2070.48	2070.22	2069.97	2069.72
STRINGER 5	2070.61	2070.36	2070.11	2069.85	2069.60
STRINGER 6	2070.50	2070.24	2069.99	2069.74	2069.48
RT. GUTTER LINER	2070.47	2070.22	2069.97	2069.71	2069.46
D.L. DEFLECTIONS					
SPAN B STRINGER 1-6	0.00	0.04	0.06	0.04	0.00

NOTES:

1. DEAD LOAD DEFLECTIONS SHOWN ARE DUE TO WEIGHT OF CONCRETE SLAB (INCLUDING MONOLITHIC WEARING SURFACE) AND PARAPETS.
2. AFTER ALL STEEL HAS BEEN ERECTED AND FALSE WORK REMOVED, THE ENGINEER SHALL TAKE ELEVATIONS ALONG THE TOPS OF THE STRINGERS AT POINTS WHERE THE ELEVATIONS ARE SHOWN IN THE TABLE "TOP OF SLAB ELEVATIONS AND DEFLECTIONS". THE DIFFERENCE BETWEEN THESE ELEVATIONS AND THE TABULATED TOP OF SLAB ELEVATIONS PLUS THE AMOUNT OF DEAD LOAD DEFLECTION SHOWN IN THE TABLE WILL BE THE THICKNESS OF THE SLAB OVER THE STRINGER AT THESE POINTS. THE SLAB THICKNESS SHALL NOT BE LESS THAN 7 1/2" TO THE TOP OF THE STRINGER. IF THE BEAMS HAVE EXCESS CAMBER AND THIS MINIMUM CANNOT BE OBTAINED, THE GRADE LINE SHALL BE ADJUSTED TO OBTAIN THIS MINIMUM THICKNESS.

NOTES:

1. FOR GENERAL NOTES, SEE SHEET NOS. C4 & C5.

NO.	SHEET	DESCRIPTION	DATE	BY

REVISIONS

WEST VIRGINIA DEPARTMENT OF HIGHWAYS
CHARLESTON, WEST VIRGINIA
INTERSTATE ROUTE NO. 77

I-77 OVER BLUESTONE RIVER
BRIDGE NO. 3010
DECK ELEVATIONS
BEAM SPANS A & B

DESIGNED BY: W.M.D.
DRAWN BY: K.F.M.
CHECKED BY: R.H.W.

GREINER ENGINEERING SCIENCES, INC.
CONSULTING ENGINEERS
BALTIMORE, MARYLAND
CHARLESTON, WEST VIRGINIA

DATE: NOV. 1975
SCALE: NONE
SHEET C24

PUBLIC ROADS DIV.	STATE DIST. NO.	STATE PROJ. NO.	FEDERAL PROJ. NO.	FISCAL YEAR	COUNTY	SHEET NO.	TOTAL SHEETS
W. VA.	10	328-77 17.42	I-77 203(17)		MERCER	C25	86

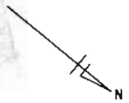

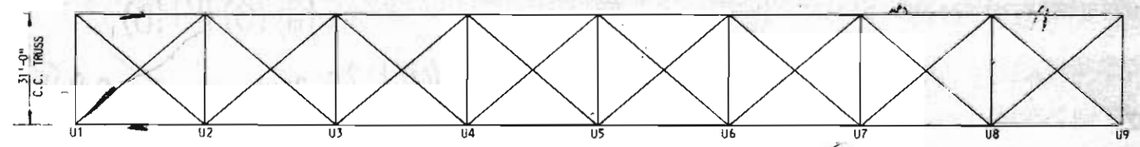

TOP LATERAL BRACING

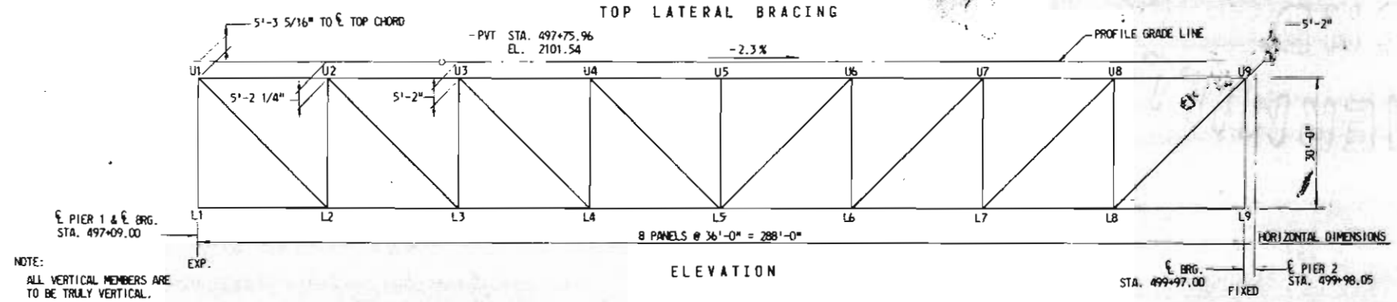

NOTE:
ALL VERTICAL MEMBERS ARE TO BE TRULY VERTICAL.

ELEVATION

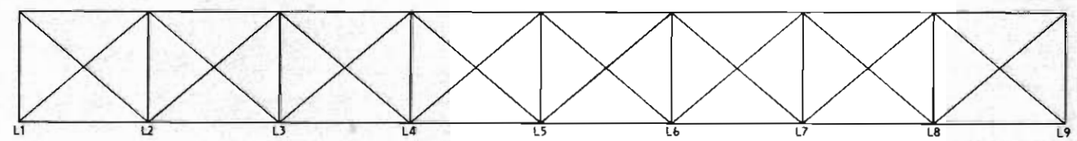

BOTTOM LATERAL BRACING

NOTE: GEOMETRIC FUNCTIONS OF ANGLES OF MEMBERS ARE FROM THE HORIZONTAL.

GEOMETRIC DATA

	PANEL POINTS	1	2	3	4	5	6	7	8	9
	TRUSS HEIGHTS	30.000	30.000	30.000	30.000	30.000	30.000	30.000	30.000	30.000
UPPER CHORD	MEMBER		U1-U2	U2-U3	U3-U4	U4-U6		U6-U7	U7-U8	U8-U9
	LENGTH (FT.)		36.010	36.010	36.010	72.019		36.010	36.010	36.010
	SECANT		1.00026	1.00026	1.00026	1.00026		1.00026	1.00026	1.00026
	TANGENT		-0.02300	-0.02300	-0.02300	-0.02300		-0.02300	-0.02300	-0.02300
LOWER CHORD	MEMBER		L1-L2	L2-L3	L3-L4	L4-L5	L5-L6	L6-L7	L7-L8	L8-L9
	LENGTH (FT.)		36.010	36.010	36.010	36.010	36.010	36.010	36.010	36.010
	SECANT		1.00026	1.00026	1.00026	1.00026	1.00026	1.00026	1.00026	1.00026
	TANGENT		-0.02300	-0.02300	-0.02300	-0.02300	-0.02300	-0.02300	-0.02300	-0.02300
DIAGONALS	MEMBER		U1-L2	U2-L3	U3-L4	U4-L5	L5-U6	L6-U7	L7-U8	L8-U9
	LENGTH (FT.)		47.396	47.396	47.396	47.396	46.336	46.336	46.336	46.336
	SECANT		1.31655	1.31655	1.31655	1.31655	1.28710	1.28710	1.28710	1.28710
	TANGENT		-0.85633	-0.85633	-0.85633	-0.85633	0.81032	0.81032	0.81032	0.81032
VERTICALS	MEMBER	L1-U1	L2-U2	L3-U3	L4-U4	L5-U5	L6-U6	L7-U7	L8-U8	L9-U9
	LENGTH (FT.)	30.000	30.000	30.000	30.000	30.000	30.000	30.000	30.000	30.000
	PANEL POINTS	1	2	3	4	5	6	7	8	9

LENGTHS ARE WITHOUT CAMBER OR TEMPERATURE CORRECTIONS.

ELEVATIONS

PANEL POINT	PROFILE GRADE	℄ UPPER CHORD	℄ LOWER CHORD
1	2103.187	2097.913	2067.913
2	2102.275	2097.085	2067.085
3	2101.424	2096.257	2066.257
4	2100.596	2095.429	2065.429
5	2099.768	2094.601	2064.601
6	2098.940	2093.773	2063.773
7	2098.112	2092.945	2062.945
8	1097.284	2092.117	2062.117
9	2096.456	2091.289	2061.289

NOTES:

1. FOR GENERAL NOTES, SEE SHEET NOS. C4 & C5.

NO.	SHEET	DESCRIPTION	DATE	BY

REVISIONS

WEST VIRGINIA DEPARTMENT OF HIGHWAYS
CHARLESTON, WEST VIRGINIA
INTERSTATE ROUTE NO. 77

I-77 OVER BLUESTONE RIVER
BRIDGE NO. 3010
FRAMING & GEOMETRY - SIMPLE TRUSS SPAN

DESIGNED BY: H.L.T.
DRAWN BY: K.F.M.
CHECKED BY: R.H.W.

GREINER ENGINEERING SCIENCES, INC.
CONSULTING ENGINEERS
BALTIMORE, MARYLAND
CHARLESTON, WEST VIRGINIA

DATE: NOV. 1975
SCALE: NONE
SHEET C25

PUBLIC ROADS DIV.	STATE DIST. NO.	STATE PROJ. NO.	FEDERAL PROJ. NO.	FISCAL YEAR	COUNTY	SHEET NO.	TOTAL SHEETS
W. VA.	10	128-77-17.42	I-77 2069 17		MERCER	C 26	86

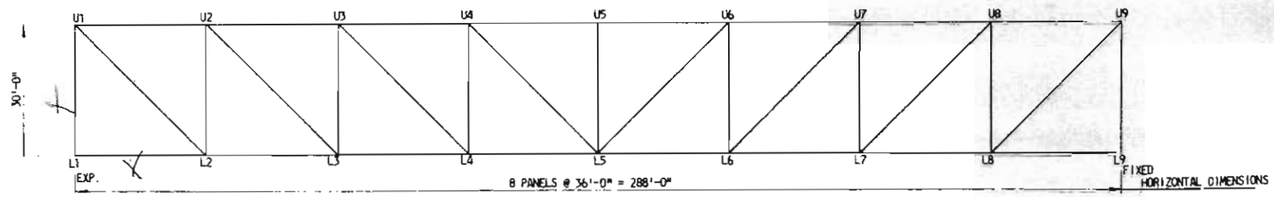

ELEVATION

UPPER CHORDS

MEMBER	MEMBER FORCES (KIPS) DEAD LOAD	LIVE LOAD	IMPACT	WIND	DESIGN	LOAD GROUP	r (INCHES)	K	KL/r	UNIT STRESS (K.S.I.) ALLOW	ACTUAL	AREA REQ'D (SQ. IN.)	AREA FURNISHED (SQ. IN.) GROSS	EFFCT. GROSS	NET	SECTION DESCRIPTION
U1-U2	-779	-189	-22	±107	-990	I	7.74	1.0	56	20.4	17.9	48.5	55.3			2 WEB PLS 7/8 x 20 2 COVER PLS 9/16 x 18
U2-U3	-1339	-323	-39	±211	-1701	I	6.95	1.0	62	19.6	19.3	86.8	88.3			2 WEB PLS 1 3/4 x 20 2 COVER PLS 9/16 x 16 1/4
U3-U4	-1677	-404	-49	±215	-2130	I	6.70	1.0	65	19.3	18.9	110.4	113.0			2 WEB PLS 2 3/8 x 20 2 COVER PLS 9/16 x 16
U4-U5	-1790	-431	-52	±239	-2273	I	6.68	1.0	65	19.3	19.2	117.8	118.6			2 WEB PLS 2 1/2 x 20 2 COVER PLS 9/16 x 16 1/2

LOWER CHORDS

MEMBER	DEAD LOAD	LIVE LOAD	IMPACT	WIND	DESIGN	LOAD GROUP	r (INCHES)	K	KL/r	ALLOW	ACTUAL	AREA REQ'D (SQ. IN.)	GROSS	EFFCT. GROSS	NET	SECTION DESCRIPTION
L1-L2	0	0	0	±84	±84	II	7.68	1.0	56	27.0	2.2	3.1	50.6		38.6	2 WEB PLS 13/16 x 20 2 COVER PLS 1/2 x 18 1/8
L2-L3	779	189	22	±347	990	I	7.68	1.0	56	27.0	25.7	36.7	50.6		38.6	2 WEB PLS 13/16 x 20 2 COVER PLS 1/2 x 18 1/8
L3-L4	1339	323	39	±536	1701	I	6.92	1.0	62	27.0	26.6	63.0	81.5		64.0	2 WEB PLS 1 5/8 x 20 2 COVER PLS 1/2 x 16 1/2
L4-L5	1677	404	49	±559	2130	I	6.69	1.0	65	27.0	26.6	78.9	101.0		80.2	2 WEB PLS 2 1/8 x 20 2 COVER PLS 1/2 x 16

DIAGONALS

MEMBER	DEAD LOAD	LIVE LOAD	IMPACT	WIND	DESIGN	LOAD GROUP	r (INCHES)	K	KL/r	ALLOW	ACTUAL	AREA REQ'D (SQ. IN.)	GROSS	EFFCT. GROSS	NET	SECTION DESCRIPTION
U1-L2	1025	266 0	32 0	±141	1323	I	6.90	1.0	82	27.0	26.3	49.0	64.3		50.4	2 WEB PLS 1 5/16 x 18 2 COVER PLS 1/2 x 17
U2-L3	738	203 -17	27 -5	±137	968	I	4.21	1.0	135	27.0	26.2	35.9	48.3		37.0	2 FLG. PLS 1 1/4 x 16 1 WEB PL 1/2 x 16 1/2
U3-L4	444	148 -40	22 -10	±40	614	I	3.40	1.0	167	27.0	26.7	22.7	29.8		23.0	2 FLG. PLS 3/4 x 14 1 WEB PL 1/2 x 17 1/2
U4-L5	149	99 -64	17 -12	±36	265	I	3.23	1.0	176	27.0	13.6	9.8	24.7		19.6	2 FLG. PLS 9/16 x 14 1 WEB PL 1/2 x 17 7/8

VERTICALS

MEMBER	DEAD LOAD	LIVE LOAD	IMPACT	WIND	DESIGN	LOAD GROUP	r (INCHES)	K	KL/r	ALLOW	ACTUAL	AREA REQ'D (SQ. IN.)	GROSS	EFFCT. GROSS	NET	SECTION DESCRIPTION
L1-U1	① -854	① -210	① -30	① ±128	① -1094	I	4.81	1.0	75	17.8	17.4	61.5	63.0			2 FLG. PLS 1 1/2 x 18 1 WEB PL 9/16 x 16
L2-U2	-629	11 -157	3 -19	±89	-805	I	4.65	1.0	77	17.4	16.9	46.3	47.8			2 FLG. PLS 1 1/16 x 18 1 WEB PL 9/16 x 16 7/8
L3-U3	-447	24 -119	8 -16	±74	-582	I	4.02	1.0	90	15.3	14.7	38.0	39.6			2 FLG. PLS 15/16 x 16 1 WEB PL 9/16 x 17 1/8
L4-U4	-261	39 -85	9 -13	±25	-359	I	3.38	1.0	107	11.9	11.1	30.2	32.5			2 FLG. PLS 13/16 x 14 1 WEB PL 9/16 x 17 3/8
L5-U5	-165	0 -92	0 -23	±46	-280	I	3.23	1.0	112	10.9	10.2	25.7	27.5			2 FLG. PLS 5/8 x 14 1 WEB PL 9/16 x 17 3/4

① INCLUDES LOADS FROM SIMPLE BEAM SPAN A.

② INCLUDES TRACTION.

REACTIONS AT ℄ OF PIN KIPS/TRUSS

PANEL POINT	DEAD LOAD	LIVE LOAD	IMPACT	75 P.S.F. TRANSV. WIND	100 P.L.F. WIND ON LIVE LOAD	LONG FORCE ③	20 P.S.F. UPWARD OVERTURNING	GROUP I	GROUP II	GROUP III	GROUP II + UPWARD OVERTURNING	GROUP III + 30% UPWARD OVERTURNING
① L1	854	210 0	30 0	±128	±23	±3	-22 -133	1094 854	982 726	1158 790	960 593	1151 750
L9	768	193 0	23 0	±117	±19	±2	-18 -110	964 748	865 631	1020 692	847 521	1015 659

PANEL DEAD LOADS - KIPS PER TRUSS

	PANEL POINTS	1*	2	3	4	5	6	7	8	9
UPPER CHORD	SLAB & FUTURE W.S.	135.4	102.1	102.1	102.1	102.1	102.1	102.1	102.1	51.0
	PARAPET	27.2	20.5	20.5	20.5	20.5	20.5	20.5	20.5	10.3
	FLOOR STEEL	22.5	15.8	15.8	15.8	15.8	15.8	15.8	15.8	7.9
	UTILITIES & ACCESS	3.3	3.6	3.6	3.6	3.6	3.6	3.6	3.6	1.8
	TRUSS	14.2	17.7	20.1	21.4	19.0	21.4	20.1	17.7	14.2
	BRACING	2.6	2.9	3.8	2.9	3.6	2.9	3.8	2.9	2.6
	SUB-TOTAL	205.2	162.6	165.9	166.3	164.6	166.3	165.9	162.6	87.8
LOWER CHORD	SLAB & FUTURE W.S.	-	-	-	-	-	-	-	-	-
	PARAPET	-	-	-	-	-	-	-	-	-
	FLOOR STEEL	-	-	-	-	-	-	-	-	-
	UTILITIES & ACCESS	-	-	-	-	-	-	-	-	-
	TRUSS	7.7	16.1	16.2	18.3	21.3	18.3	16.2	16.1	7.7
	BRACING	2.7	3.1	3.6	2.3	3.0	2.3	3.6	3.1	2.7
	SUB-TOTAL	10.4	19.2	19.8	20.6	24.3	20.6	19.8	19.2	10.4
	TOTAL PANEL LOAD	215.6	181.8	185.7	186.9	188.9	186.9	185.1	181.8	98.2

* NOTE: PANEL LOAD INCLUDES LOADS FROM BEAM SPAN A.

LATERAL PANEL LOADS: WIND (75 LBS./SQ. FT.) - KIPS

PANEL POINTS	1	2	3	4	5	6	7	8	9
UPPER CHORD	15.3	25.3	23.8	23.6	21.7	23.6	23.8	25.3	15.3
LOWER CHORD	9.9	17.8	16.9	16.1	16.1	16.1	16.9	17.8	9.9
TOTAL PANEL LOAD	25.2	43.1	40.7	39.7	37.8	39.7	40.7	43.1	25.2

NOTES:

1. FOR GENERAL NOTES, SEE SHEET NOS. C4 & C5.
2. FORCES AND STRESSES SHOWN REPRESENT THOSE CONTROLLING THE DESIGN OF THE MEMBER INDICATED OR THE ANALOGOUS MEMBER BEYOND PANEL 5.
3. FOR MEMBER SECTIONS AND OTHER NOTES, SEE SHEET NO. C8.
4. ALL STEEL IS TO BE A.S.T.M. A588 WEATHERING STEEL.
5. BOLTS USED FOR CONNECTION OF GUSSETS, ANGLES AND PLATES TO THE VERTICAL FACE OF MAIN MEMBERS SHALL BE 1" DIA. A.S.T.M. A325 TYPE 3 BOLTS. ALL OTHER BOLTS SHALL BE 7/8" DIA. A.S.T.M. A325 TYPE 3 BOLTS.

NO.	SHEET	DESCRIPTION	DATE	BY

REVISIONS

WEST VIRGINIA DEPARTMENT OF HIGHWAYS
CHARLESTON, WEST VIRGINIA
INTERSTATE ROUTE NO. 77

I-77 OVER BLUESTONE RIVER
BRIDGE NO. 3010
STRESS SHEET AND LOADING DATA
SIMPLE TRUSS SPAN

DESIGNED BY: H.L.T.
DRAWN BY: K.F.M.
CHECKED BY: J.W.A.

GREINER ENGINEERING SCIENCES, INC.
CONSULTING ENGINEERS
BALTIMORE, MARYLAND
CHARLESTON, WEST VIRGINIA

DATE: NOV. 1975
SCALE: NONE
SHEET C26

PUBLIC ROADS DIV.	STATE DIST. NO.	STATE PROJ. NO.	FEDERAL PROJ. NO.	FISCAL YEAR	COUNTY	SHEET NO.	TOTAL SHEETS
W. VA.	10	328-77-17.42	I-77 206(17)		MERCER	C27	86

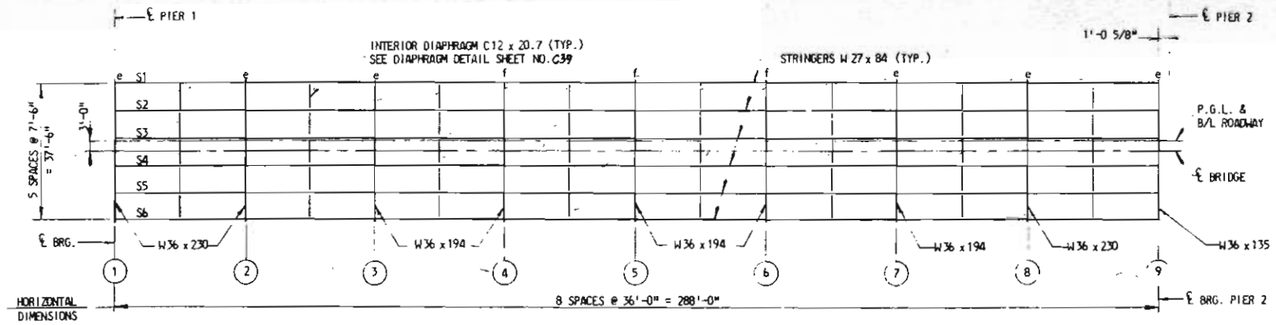

FRAMING PLAN
SCALE: 1" = 20'

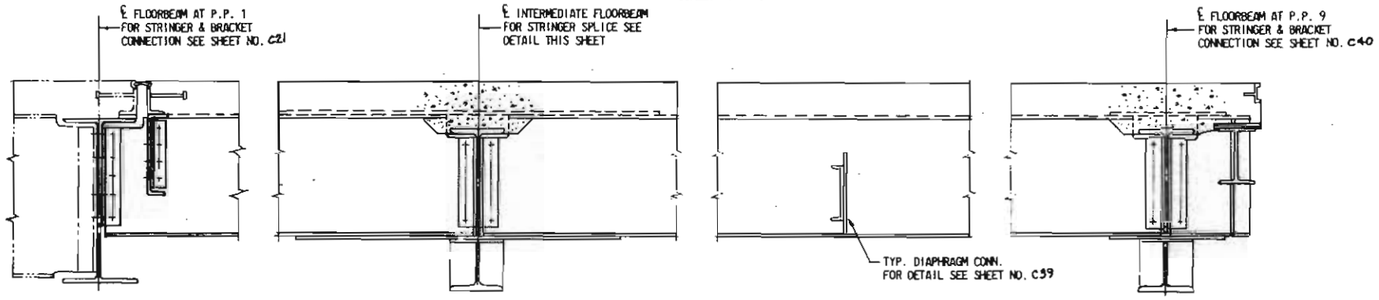

STRINGER ELEVATION
SCALE: NONE

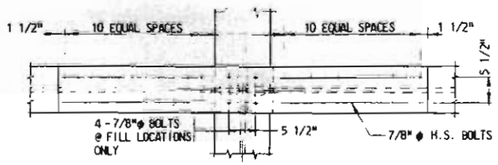

PLAN

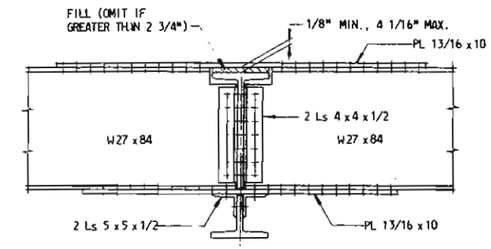

SECTION B-B

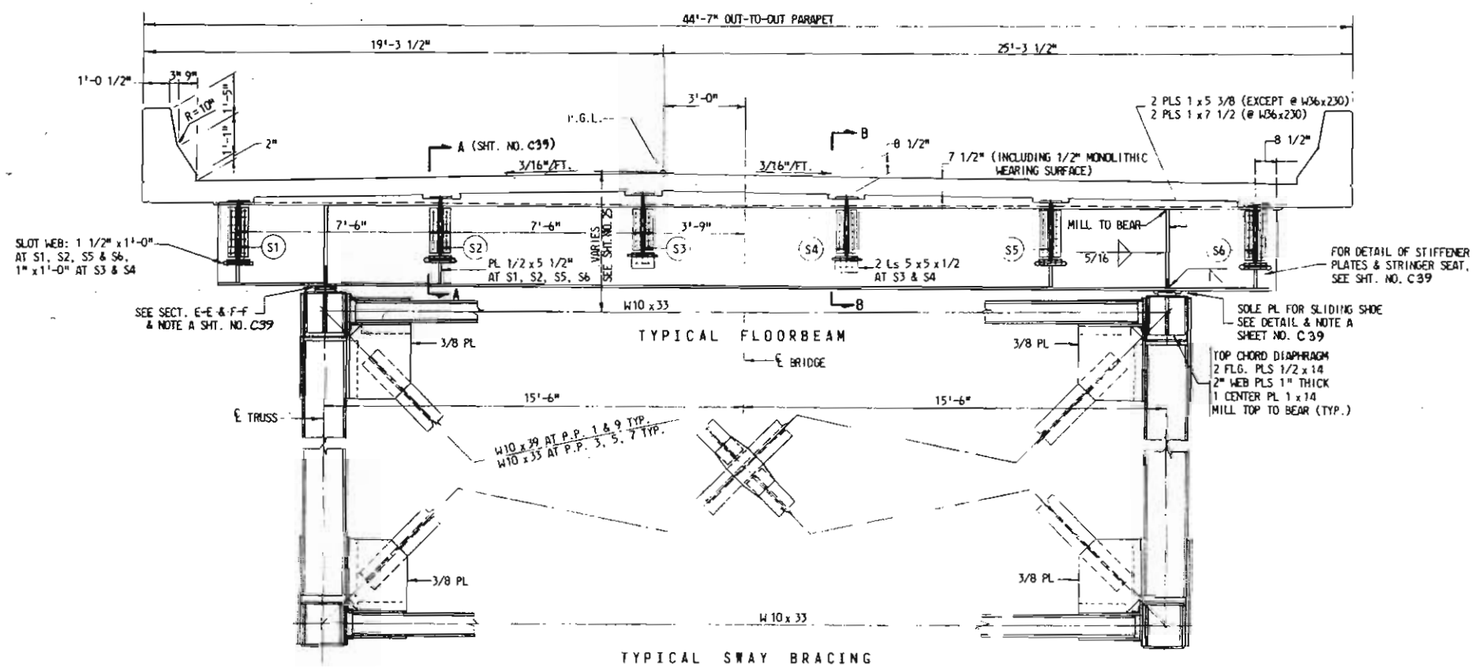

TYPICAL SWAY BRACING
SCALE: 3/8" = 1'-0"

NOTES:

1. FOR GENERAL NOTES SEE SHEET NOS. C4 & C5.
2. STRINGER WEBS TO BE VERTICAL, WEB OF FLOORBEAM TO BE NORMAL TO GRADE OF TOP CHORD.
3. FLOOR SYSTEM SYMBOLS: "e" SLIDING FLOORBEAM, STRINGERS FIXED BOTH SIDES, "f" FIXED FLOORBEAM, STRINGERS FIXED BOTH SIDES.

NO.	SHEET	DESCRIPTION	DATE	BY

REVISIONS

WEST VIRGINIA DEPARTMENT OF HIGHWAYS
CHARLESTON, WEST VIRGINIA
INTERSTATE ROUTE NO. 77

I-77 OVER BLUESTONE RIVER
BRIDGE NO. 3010
FRAMING PLAN & DETAILS - SIMPLE TRUSS SPAN

DESIGNED BY: H.L.T.
DRAWN BY: K.F.M.
CHECKED BY: W.M.D.

GREINER ENGINEERING SCIENCES, INC.
CONSULTING ENGINEERS
BALTIMORE, MARYLAND
CHARLESTON, WEST VIRGINIA

DATE: NOV. 1975
SCALE: 3/4" = 1'-0" & AS NOTED
SHEET C27

PUBLIC ROADS DIV.	STATE DIST. NO.	STATE PROJ. NO.	FEDERAL PROJ. NO.	FISCAL YEAR	COUNTY	SHEET NO.	TOTAL SHEETS
W. VA.	10	328-77-17.42	I-77 206(17)		MERCER	C28	86

NOTE A:
WHERE REINF. BARS INTERFERE WITH I-BEAM EQUAL. CONTROL UNITS ADJUST BY INCREASING LENGTH OF LAP IN SPLICE.

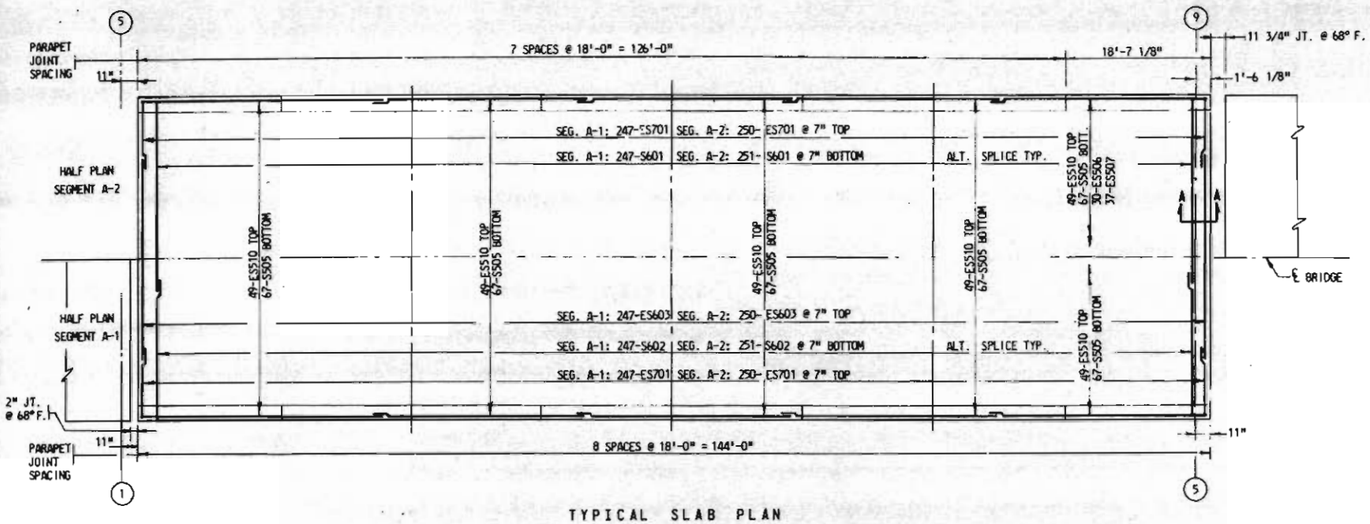

TYPICAL SLAB PLAN
SCALE: 1" = 10'-0"

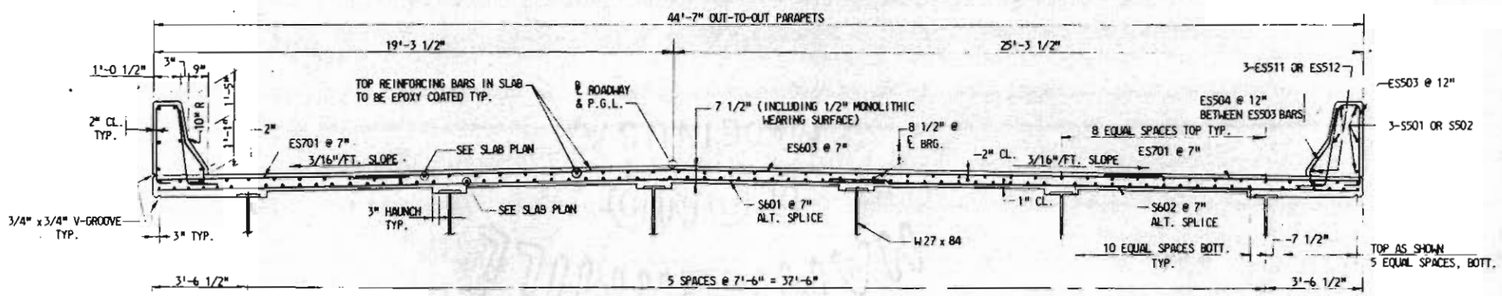

TYPICAL CROSS SECTION
SCALE: 3/8" = 1'-0"

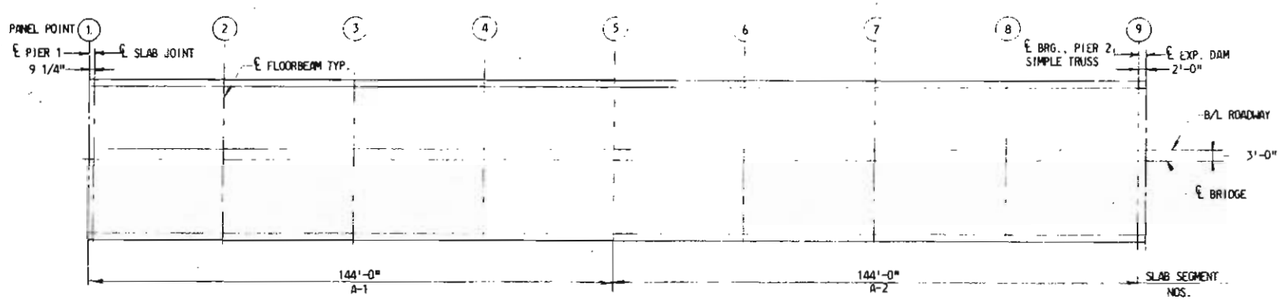

CONCRETE DECK PLAN
SCALE: 1" = 20'-0"

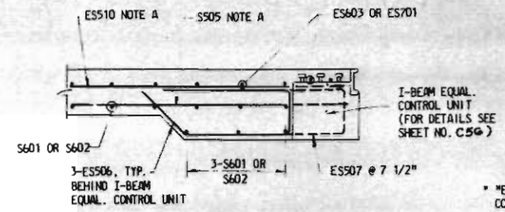

SECTION A-A
SCALE: 1" = 1'-0"

* "ES" DENOTES EPOXY COATED REINFORCING BARS.

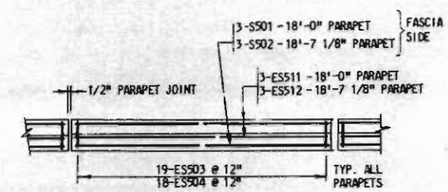

PARAPET PLAN
SCALE: NONE

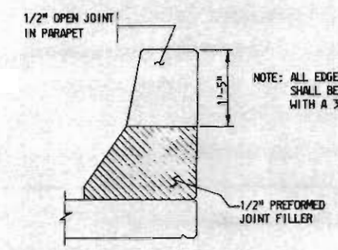

NOTE: ALL EDGES OF JOINT SHALL BE FINISHED WITH A 3/4" CHAMFER.

CURB AND PARAPET JOINT DETAIL
SCALE: 3/4" = 1'-0"

BAR SCHEDULE				
MARK	NO. OF BARS	LENGTH	WEIGHT LBS.	TYPE
S501	90	17'-8"	1659	STR.
S502	6	18'-3"	114	STR.
ES503 *	608	9'-0"	5707	A
ES504 *	576	5'-0 1/2"	3029	B
S505	670	30'-2"	21081	STR.
ES506 *	30	5'-7"	175	C
ES507 *	37	6'-4"	244	C
S508	32	3'-9"	125	STR.
S509	32	2'-0"	67	STR.
ES510 *	490	30'-2"	15417	STR.
ES511 *	90	17'-8"	1659	STR.
ES512 *	6	18'-3"	114	STR.
ES513 *	32	3'-9"	125	STR.
ES514 *	32	2'-0"	67	STR.
S601	498	26'-10"	20071	STR.
S602	498	19'-4"	14459	STR.
ES603 *	497	30'-0"	22394	STR.
ES701 *	994	9'-4"	18963	STR.
RE501	7	9'-0"	66	STR.
RE601	15	10'-1"	227	STR.
RE701 **	5	12'-0"	123	STR.

** DENOTES EPOXY COATED RE BAR.

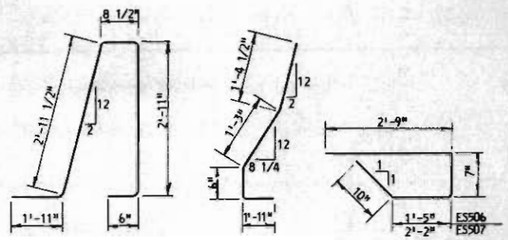

TYPE A TYPE B TYPE C

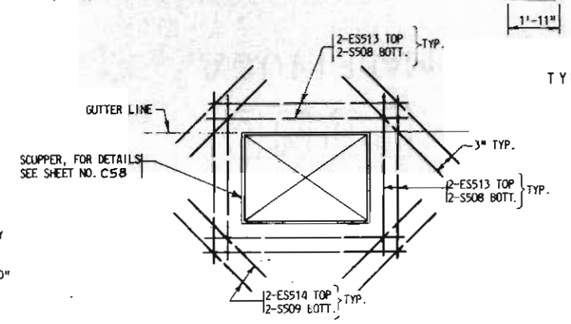

REINFORCEMENT AT SCUPPER
SCALE: 3/4" = 1'-0"

NOTES:

1. FOR GENERAL NOTES, SEE SHEET NOS. C4 & C5.
2. FOR EXPANSION DAM AND SLAB JOINT DETAILS SEE SHEETS NOS. C56 & C57.
3. WHERE REINFORCING BARS INTERFERE WITH THE PLACEMENT OF SCUPPERS, THE BARS SHALL BE CUT AS APPROVED BY THE ENGINEER.
4. FOR SCUPPER LOCATIONS SEE SHEET NOS. C20 & C58.

NO.	SHEET	DESCRIPTION	DATE	BY

REVISIONS

WEST VIRGINIA DEPARTMENT OF HIGHWAYS
CHARLESTON, WEST VIRGINIA
INTERSTATE ROUTE NO. 77

I-77 OVER BLUESTONE RIVER
BRIDGE NO. 3010
CONCRETE DECK DETAILS
SIMPLE TRUSS SPAN

DESIGNED BY: H.L.T.
DRAWN BY: K.F.M., T.G.
CHECKED BY: M.K.Y.

GREINER ENGINEERING SCIENCES, INC.
CONSULTING ENGINEERS
BALTIMORE, MARYLAND
CHARLESTON, WEST VIRGINIA

DATE: NOV. 1975
SCALE: AS NOTED
SHEET C28

PUBLIC ROADS DIV.	STATE DIST. NO.	STATE PROJ. NO.	FEDERAL PROJ. NO.	FISCAL YEAR	COUNTY	SHEET NO.	TOTAL SHEETS
W. VA.	10	328-77 17.42	I-77 Z0617		MERCER	C29	86

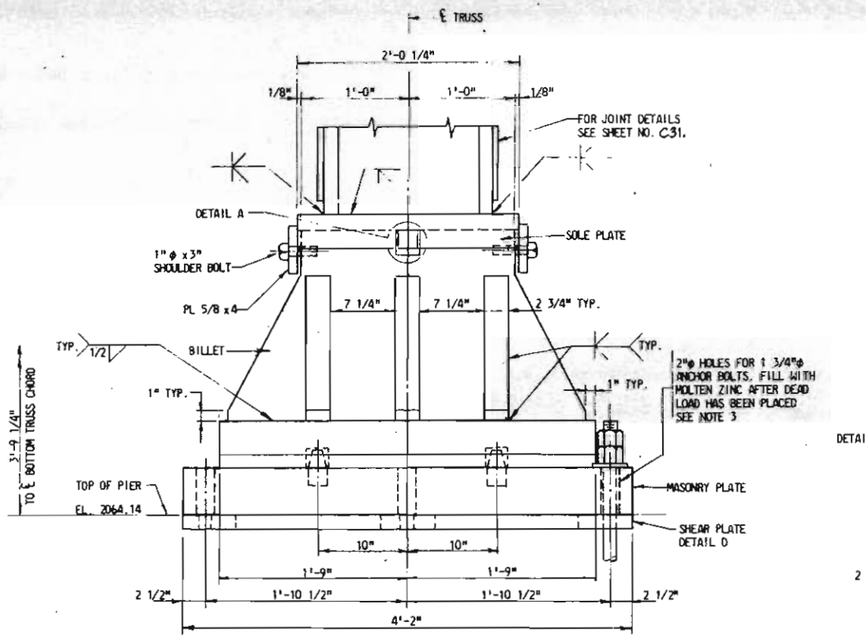

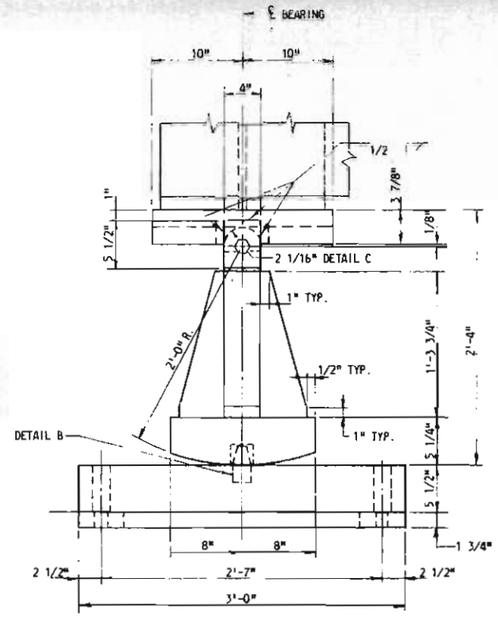

EXPANSION SHOES - PIER 1

SCALE: 1 1/2" = 1'-0"

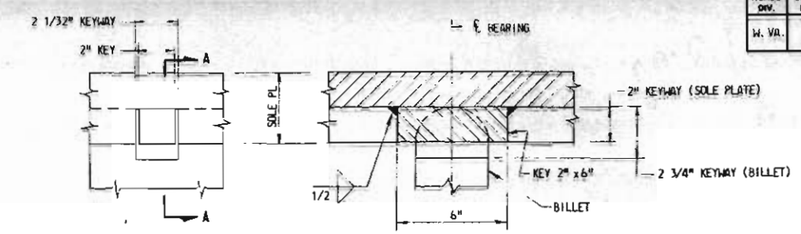

DETAIL A

SECTION A-A

SCALE: 3" = 1'-0"

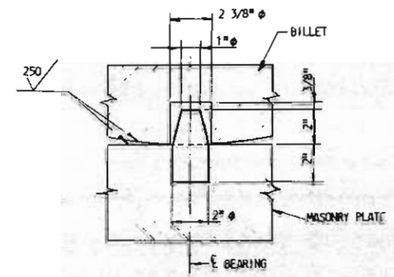

DETAIL B

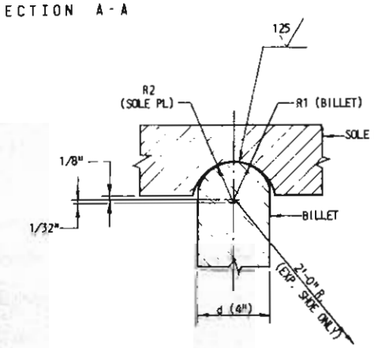

R1 (RADIUS OF BILLET) = d/2 + 1/16"

R2 (RADIUS OF SOLE PL) = d/2 + 3/32"

DETAIL C

SCALE: 3" = 1'-0"

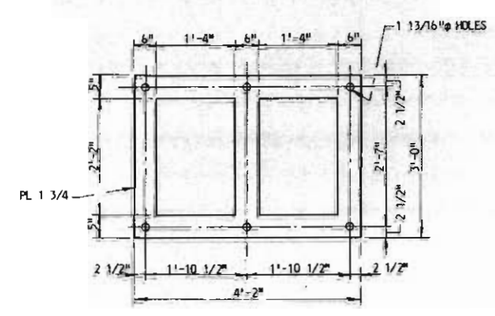

DETAIL D

SHEAR PLATE - EXP. SHOE

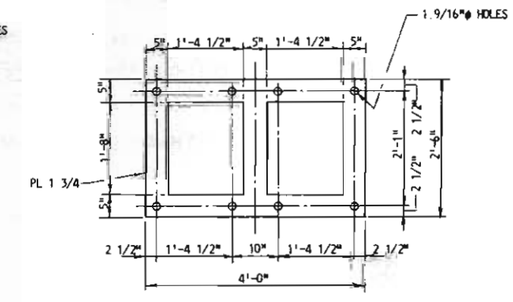

DETAIL E

SHEAR PLATE - FIXED SHOE

SCALE: 3/4" = 1'-0"

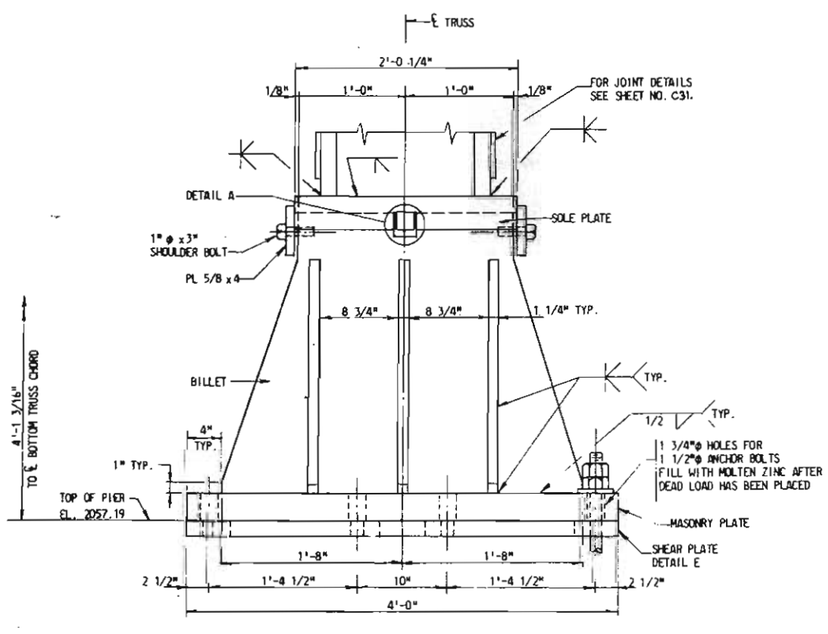

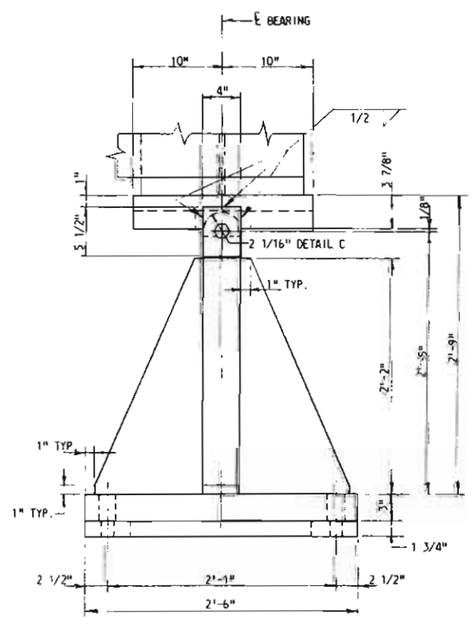

FIXED SHOES - PIER 2

SCALE: 1 1/2" = 1'-0"

NOTES:

1. FOR GENERAL NOTES, SEE SHEET NOS. C4 & C5.
2. SHEAR PLATES SHALL BE A.S.T.M. A-36 STEEL.
3. FOR ANCHOR BOLT DETAILS, SEE SHEET NO. C12.

NO.	SHEET	DESCRIPTION	DATE	BY

REVISIONS

WEST VIRGINIA DEPARTMENT OF HIGHWAYS
CHARLESTON, WEST VIRGINIA
INTERSTATE ROUTE NO. 77

I-77 OVER BLUESTONE RIVER
BRIDGE NO. 3010
SIMPLE TRUSS SPAN - BEARINGS

DESIGNED BY: C.M.D.
DRAWN BY: T.G.
CHECKED BY: J.W.A.

GREINER ENGINEERING SCIENCES, INC.
CONSULTING ENGINEERS
BALTIMORE, MARYLAND
CHARLESTON, WEST VIRGINIA

DATE: NOV. 1975
SCALE: AS NOTED
SHEET C29

PUBLIC ROADS DIV.	STATE DIST. NO.	STATE PROJ. NO.	FEDERAL PROJ. NO.	FISCAL YEAR	COUNTY	SHEET NO.	TOTAL SHEETS
W. VA.	10	328-77-17.42	I-77 206)17		MERCER	C30	86

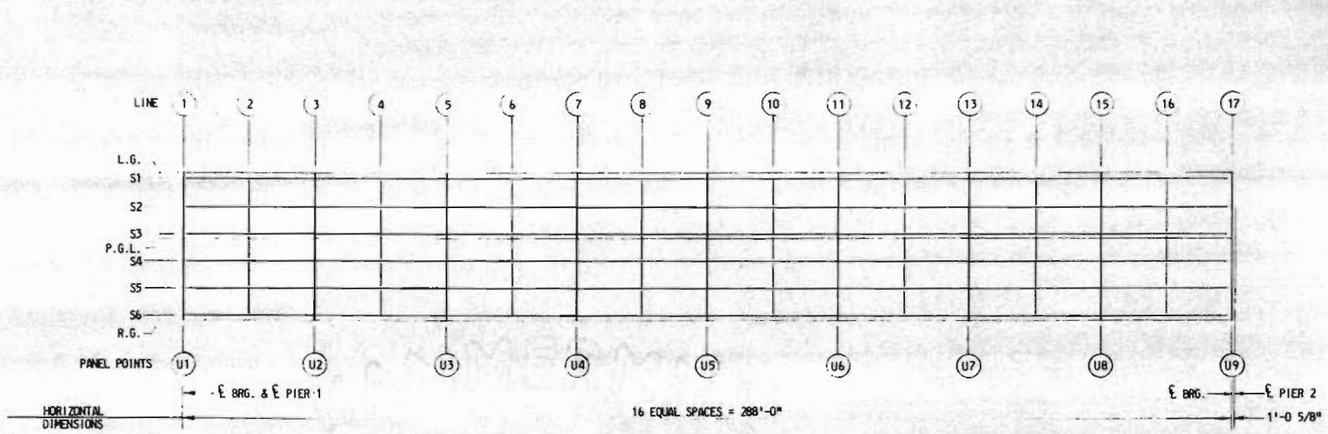

PLAN

TOP OF SLAB ELEVATIONS (IN FEET)

LINE	1	2	3	4	5	6	7	8	9	10	11	12	13	14	15	16	17
LT. GUTTER LINE	2102.92	2102.45	2102.01	2101.57	2101.16	2100.74	2100.33	2099.91	2099.50	2099.09	2098.67	2098.26	2097.84	2097.43	2097.02	2096.60	2096.19
STRINGER 1	2102.94	2102.48	2102.03	2101.60	2101.18	2100.76	2100.35	2099.94	2099.52	2099.11	2098.69	2098.28	2097.87	2097.45	2097.04	2096.62	2096.21
STRINGER 2	2103.06	2102.60	2102.15	2101.71	2101.30	2100.88	2100.47	2100.05	2099.64	2099.23	2098.81	2098.40	2097.98	2097.57	2097.16	2096.74	2096.33
STRINGER 3	2103.18	2102.71	2102.26	2101.83	2101.41	2101.00	2100.58	2100.17	2099.76	2099.34	2098.93	2098.51	2098.10	2097.69	2097.27	2096.86	2096.44
P.G.L.	2103.19	2102.72	2102.28	2101.84	2101.42	2101.01	2100.60	2100.18	2099.77	2099.35	2098.94	2098.53	2098.11	2097.70	2097.28	2096.87	2096.46
STRINGER 4	2103.08	2102.62	2102.17	2101.74	2101.32	2100.91	2100.49	2100.08	2099.66	2099.25	2098.84	2098.42	2098.01	2097.59	2097.18	2096.77	2096.35
STRINGER 5	2102.97	2102.50	2102.05	2101.62	2101.20	2100.79	2100.37	2099.96	2099.55	2099.13	2098.72	2098.30	2097.89	2097.48	2097.06	2096.65	2096.23
STRINGER 6	2102.85	2102.38	2101.94	2101.50	2101.09	2100.67	2100.26	2099.84	2099.43	2099.02	2098.60	2098.19	2097.77	2097.36	2096.95	2096.53	2096.12
RT. GUTTER LINE	2102.83	2102.36	2101.91	2101.48	2101.06	2100.65	2100.23	2099.82	2099.41	2098.99	2098.58	2098.16	2097.75	2097.34	2096.92	2096.51	2096.09

NOTES:

1. FOR GENERAL NOTES, SEE SHEET NOS. C4 & C5.

NO.	SHEET	DESCRIPTION	DATE	BY

REVISIONS

WEST VIRGINIA DEPARTMENT OF HIGHWAYS
CHARLESTON, WEST VIRGINIA
INTERSTATE ROUTE NO.77

I-77 OVER BLUESTONE RIVER
BRIDGE NO. 3010
DECK ELEVATIONS - SIMPLE TRUSS SPAN

DESIGNED BY: W.M.D.
DRAWN BY: K.F.M.
CHECKED BY: R.H.W.

GREINER ENGINEERING SCIENCES, INC.
CONSULTING ENGINEERS
BALTIMORE, MARYLAND
CHARLESTON, WEST VIRGINIA

DATE: NOV. 1975
SCALE: NONE
SHEET C30

PUBLIC ROADS DIV.	STATE DIST. NO.	STATE PROJ. NO.	FEDERAL PROJ. NO.	FISCAL YEAR	COUNTY	SHEET NO.	TOTAL SHEETS
W. VA.	10	328-77-17.42	I-77 206(17)		MERCER	C31	86

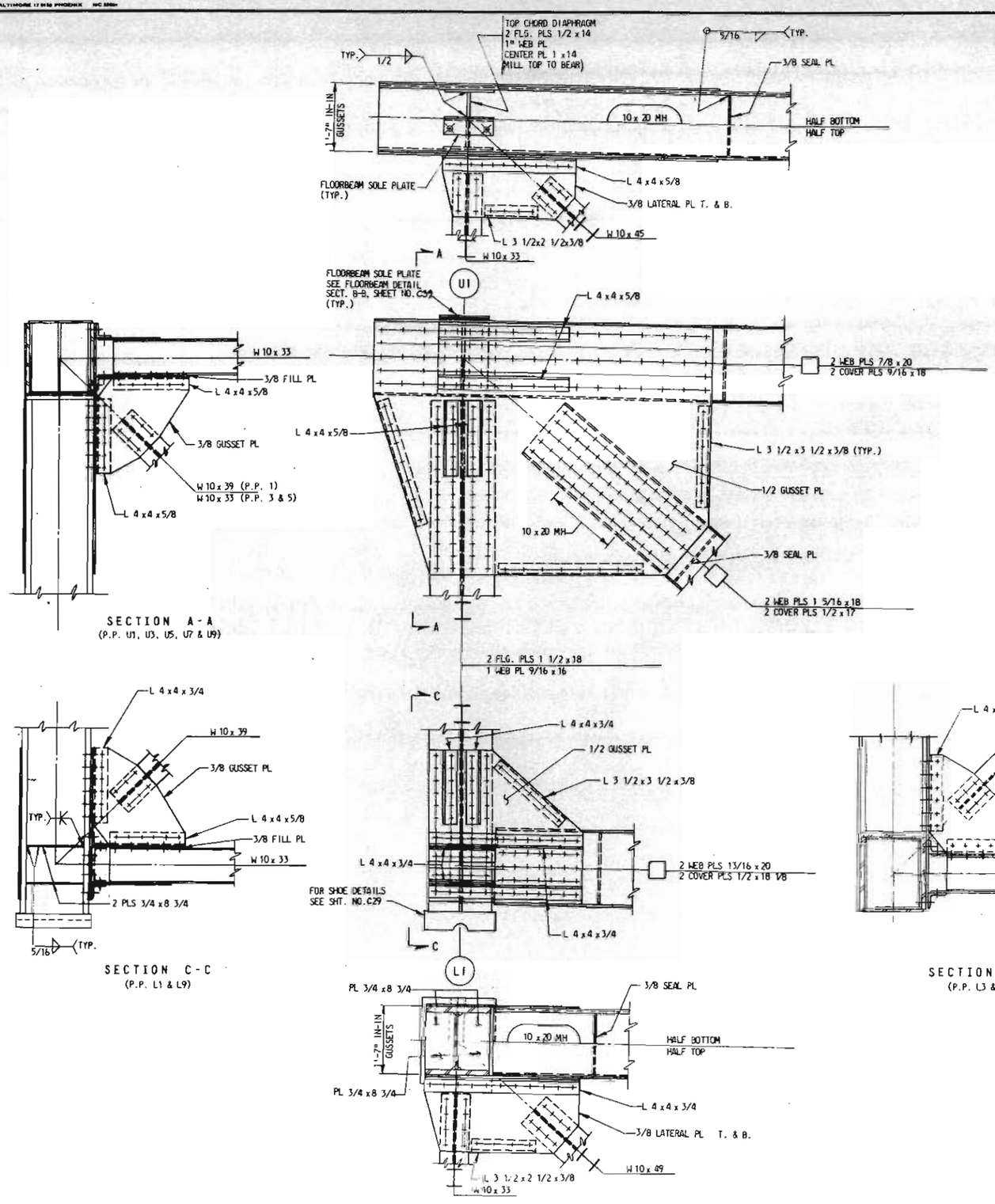

SECTION A-A
(P.P. U1, U3, U5, U7 & U9)

SECTION C-C
(P.P. L1 & L9)

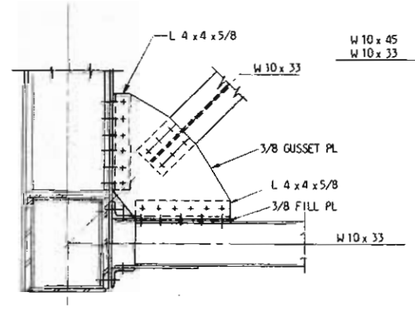

SECTION B-B
(P.P. L3 & L5)

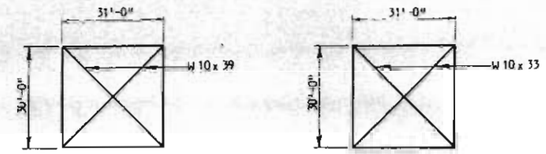

P.P. 1 & 9 P.P. 3. 5 & 7

SWAY FRAME SCHEMATIC DIAGRAMS

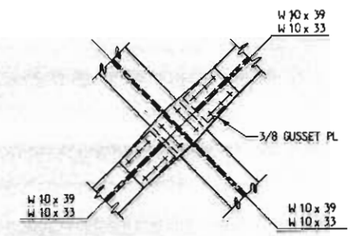

JUNCTION OF SWAY FRAME

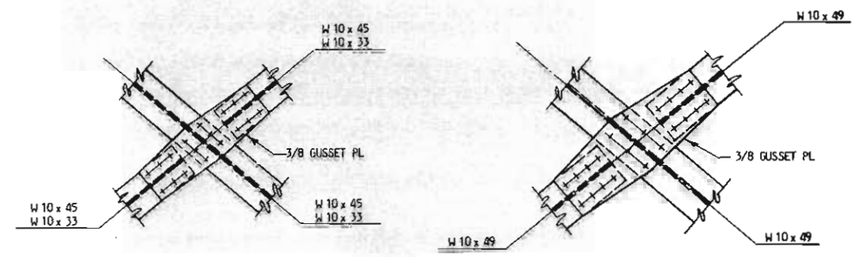

JUNCTION OF LATERAL BRACING

NOTES:

1. FOR GENERAL NOTES, SEE SHEET NOS. C4 & C5.
2. P.P. 1 & P.P. 9 SIMILAR.

See letter 3-28-77 in Files for Changes

NO.	SHEET	DESCRIPTION	DATE	BY

REVISIONS

WEST VIRGINIA DEPARTMENT OF HIGHWAYS
CHARLESTON, WEST VIRGINIA
INTERSTATE ROUTE NO. 77

I-77 OVER BLUESTONE RIVER
BRIDGE NO. 3010
SIMPLE TRUSS SPAN - JOINT DETAILS I

DESIGNED BY: H.L.T.
DRAWN BY: E.R.A.
CHECKED BY: J.H.A.

GREINER ENGINEERING SCIENCES, INC.
CONSULTING ENGINEERS
BALTIMORE, MARYLAND
CHARLESTON, WEST VIRGINIA

DATE: NOV. 1975
SCALE: 3/4" = 1'-0"
SHEET C31

PUBLIC ROADS DIV.	STATE DIST. NO.	STATE PROJ. NO.	FEDERAL PROJ. NO.	FISCAL YEAR	COUNTY	SHEET NO.	TOTAL SHEETS
W. VA.	10	328-77-17.42	I-77 2069 17		MERCER	C32	86

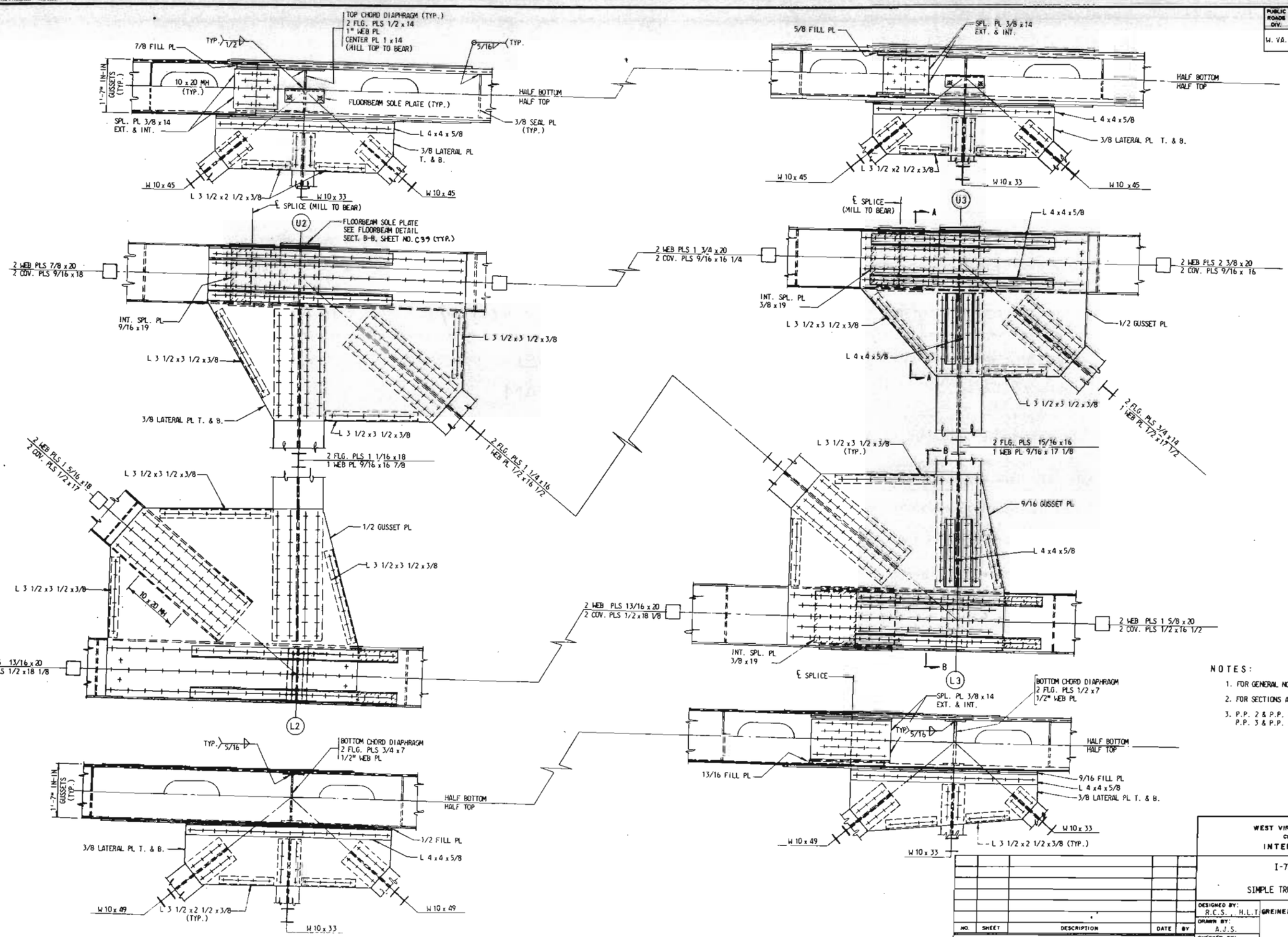

NOTES:

1. FOR GENERAL NOTES, SEE SHEET NOS. C4 & C5.
2. FOR SECTIONS A-A & B-B, SEE SHEET NO. C31.
3. P.P. 2 & P.P. 8 SIMILAR.
   P.P. 3 & P.P. 7 SIMILAR.

NO.	SHEET	DESCRIPTION	DATE	BY

REVISIONS

WEST VIRGINIA DEPARTMENT OF HIGHWAYS
CHARLESTON, WEST VIRGINIA
INTERSTATE ROUTE NO. 77

I-77 OVER BLUESTONE RIVER
BRIDGE NO. 3010
SIMPLE TRUSS SPAN - JOINT DETAILS II

DESIGNED BY: R.C.S., H.L.T.
DRAWN BY: A.J.S.
CHECKED BY: R.C.S. & J.W.A.

GREINER ENGINEERING SCIENCES, INC.
CONSULTING ENGINEERS
BALTIMORE, MARYLAND
CHARLESTON, WEST VIRGINIA

DATE: NOV. 1975
SCALE: 3/4" = 1'-0"
SHEET C32

PUBLIC ROADS DIV.	STATE DIST. NO.	STATE PROJ. NO.	FEDERAL PROJ. NO.	FISCAL YEAR	COUNTY	SHEET NO.	TOTAL SHEETS
W. VA.	10	328-77-17.42	I-77 (Co) 17		MERCER	C33	86

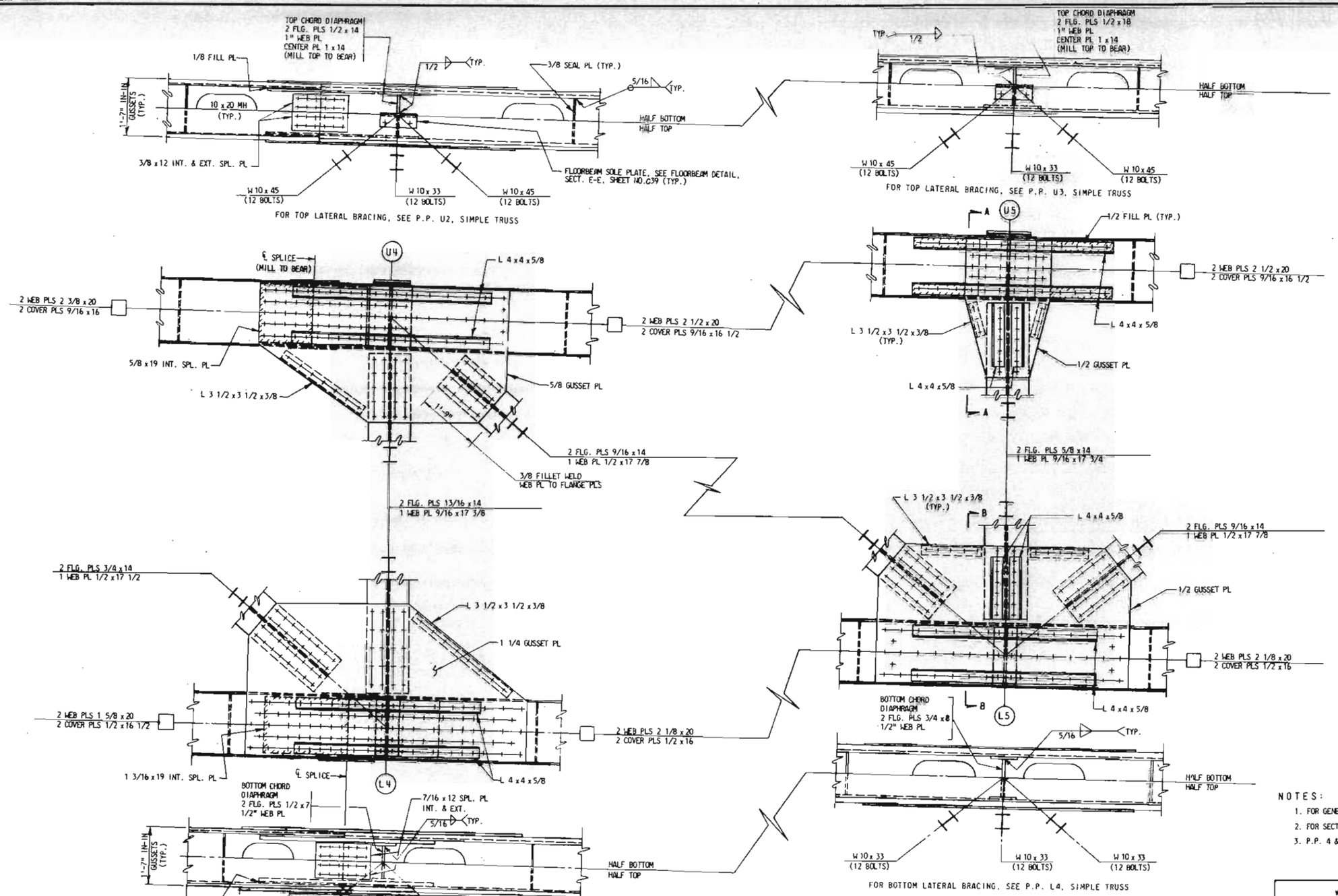

NOTES:

1. FOR GENERAL NOTES, SEE SHEET NOS. C4 & C5.
2. FOR SECTIONS A-A AND B-B, SEE SHEET NO. C31.
3. P.P. 4 & P.P. 6 SIMILAR.

NO.	SHEET	DESCRIPTION	DATE	BY

REVISIONS

WEST VIRGINIA DEPARTMENT OF HIGHWAYS
CHARLESTON, WEST VIRGINIA
INTERSTATE ROUTE NO.77

I-77 OVER BLUESTONE RIVER
BRIDGE NO. 3010
SIMPLE TRUSS SPAN - JOINT DETAILS III

DESIGNED BY: H.L.T. & R.C.S.
DRAWN BY: E.R.A
CHECKED BY: R.C.S. & J.W.A.

GREINER ENGINEERING SCIENCES, INC.
CONSULTING ENGINEERS
BALTIMORE, MARYLAND
CHARLESTON, WEST VIRGINIA

DATE: NOV. 1975
SCALE: 3/4" = 1'-0"
SHEET C33

PUBLIC ROADS DIV.	STATE DIST. NO.	STATE PROJ. NO.	FEDERAL PROJ. NO.	FISCAL YEAR	COUNTY	SHEET NO.	TOTAL SHEETS
W. VA.	10	328-77-17,42	I-77 206(17)		MERCER	C34	86

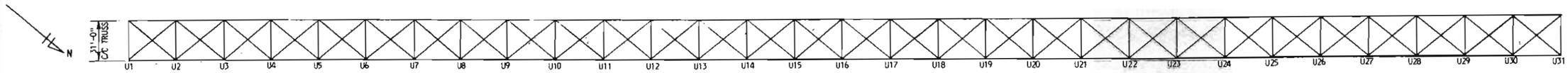

TOP LATERAL BRACING

LATERAL = 48'

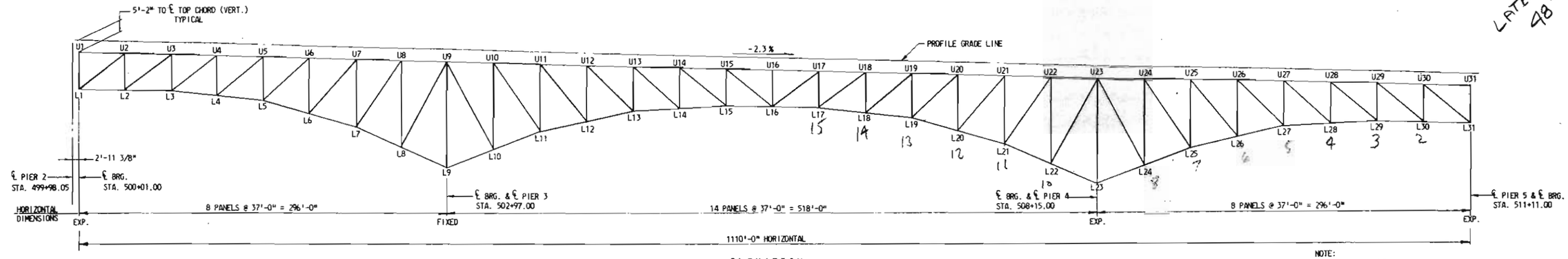

ELEVATION

NOTE:
ALL VERTICAL MEMBERS ARE TO BE TRULY VERTICAL.

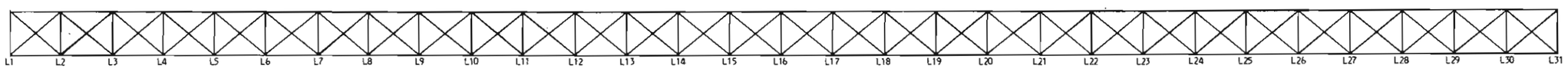

BOTTOM LATERAL BRACING

ELEVATIONS

PANEL POINT	PROFILE GRADE	℄ UPPER CHORD	℄ LOWER CHORD	PANEL POINT	PROFILE GRADE	℄ UPPER CHORD	℄ LOWER CHORD
1	2096.364	2091.197	2061.197	17	2082.748	2077.581	2047.581
2	2095.513	2090.346	2060.346	18	2081.897	2076.730	2043.647
3	2094.662	2089.495	2059.495	19	2081.046	2075.879	2039.712
4	2093.811	2088.644	2055.561	20	2080.195	2075.028	2029.695
5	2092.960	2087.793	2051.626	21	2079.344	2074.177	2019.677
6	2092.109	2086.942	2041.609	22	2078.493	2073.326	2003.576
7	2091.258	2086.091	2031.591	23	2077.642	2072.475	1987.475
8	2090.407	2085.240	2015.490	24	2076.791	2071.624	2001.874
9	2089.556	2084.389	1999.389	25	2075.940	2070.773	2016.273
10	2088.705	2083.538	2013.788	26	2075.089	2069.922	2024.589
11	2087.854	2082.687	2028.187	27	2074.238	2069.071	2032.904
12	2087.003	2081.836	2036.503	28	2073.387	2068.220	2035.137
13	2086.152	2080.985	2044.818	29	2072.536	2067.369	2037.369
14	2085.301	2080.134	2047.051	30	2071.685	2066.518	2036.518
15	2084.450	2079.283	2049.283	31	2070.834	2065.667	2035.667
16	2083.599	2078.432	2048.432				

NOTES:

1. FOR GENERAL NOTES, SEE SHEET NOS. C44-C5.

NO.	SHEET	DESCRIPTION	DATE	BY

REVISIONS

WEST VIRGINIA DEPARTMENT OF HIGHWAYS
CHARLESTON, WEST VIRGINIA
INTERSTATE ROUTE NO.77

I-77 OVER BLUESTONE RIVER
BRIDGE NO. 3010
FRAMING & PANEL POINT ELEVATIONS
CONTINUOUS TRUSS SPANS

DESIGNED BY: T.D.J.
DRAWN BY: K.F.M.
CHECKED BY: H.L.T.

GREINER ENGINEERING SCIENCES, INC.
CONSULTING ENGINEERS
BALTIMORE, MARYLAND
CHARLESTON, WEST VIRGINIA

DATE: NOV. 1975
SCALE: 1" = 40'
SHEET C34

PUBLIC ROADS DIV.	STATE DIST. NO.	STATE PROJ. NO.	FEDERAL PROJ. NO.	FISCAL YEAR	COUNTY	SHEET NO.	TOTAL SHEETS
W. VA.	10	328-77-17.02	I-77 206017		MERCER	C35	86

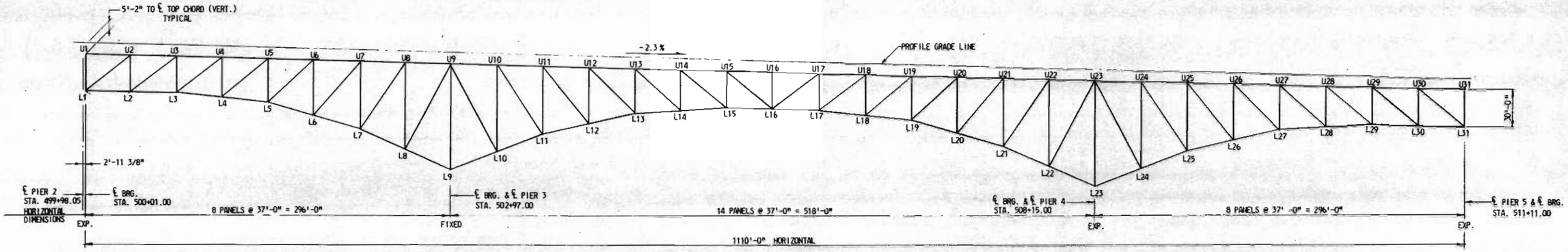

ELEVATION

GEOMETRIC DATA

	PANEL POINTS	1	2	3	4	5	6	7	8	9	10	11	12	13	14	15	16	17	18	19	20	21	22	23	24	25	26	27	28	29	30	31
	TRUSS HEIGHTS	30.000	30.000	33.083	33.83	36.167	45.333	54.500	69.750	85.000	69.750	54.500	45.333	36.167	33.083	30.000	30.000	30.000	33.083	36.167	45.333	54.500	69.750	85.000	69.750	54.500	45.333	36.167	33.083	30.000	30.000	30.000

	MEMBER	U1-U2	U2-U3	U3-U4	U4-U5	U5-U6	U6-U7	U7-U8	U8-U9	U9-U10	U10-U11	U11-U12	U12-U13	U13-U14	U14-U15	U15-U16	U16-U17	U17-U18	U18-U19	U19-U20	U20-U21	U21-U22	U22-U23	U23-U24	U24-U25	U25-U26	U26-U27	U27-U28	U28-U29	U29-U30	U30-U31
UPPER CHORD	LENGTH (FT.)	37.010	37.010	37.010	37.010	37.010	37.010	37.010	37.010	37.010	37.010	37.010	37.010	37.010	37.010	37.010	37.010	37.010	37.010	37.010	37.010	37.010	37.010	37.010	37.010	37.010	37.010	37.010	37.010	37.010	37.010
	SECANT	1.00026	1.00026	1.00026	1.00026	1.00026	1.00026	1.00026	1.00026	1.00026	1.00026	1.00026	1.00026	1.00026	1.00026	1.00026	1.00026	1.00026	1.00026	1.00026	1.00026	1.00026	1.00026	1.00026	1.00026	1.00026	1.00026	1.00026	1.00026	1.00026	1.00026
	TANGENT	-0.02300	-0.02300	-0.02300	-0.02300	-0.02300	-0.02300	-0.02300	-0.02300	-0.02300	-0.02300	-0.02300	-0.02300	-0.02300	-0.02300	-0.02300	-0.02300	-0.02300	-0.02300	-0.02300	-0.02300	-0.02300	-0.02300	-0.02300	-0.02300	-0.02300	-0.02300	-0.02300	-0.02300	-0.02300	-0.02300

	MEMBER	L1-L2	L2-L3	L3-L4	L4-L5	L5-L6	L6-L7	L7-L8	L8-L9	L9-L10	L10-L11	L11-L12	L12-L13	L13-L14	L14-L15	L15-L16	L16-L17	L17-L18	L18-L19	L19-L20	L20-L21	L21-L22	L22-L23	L23-L24	L24-L25	L25-L26	L26-L27	L27-L28	L28-L29	L29-L30	L30-L31
LOWER CHORD	LENGTH (FT.)	37.010	37.010	37.209	37.209	38.332	38.332	40.351	40.351	39.703	39.703	37.923	37.923	37.067	37.067	37.010	37.010	37.209	37.209	38.332	38.332	40.351	40.351	39.703	39.703	37.923	37.923	37.067	37.067	37.010	37.010
	SECANT	1.00026	1.00026	1.00564	1.00564	1.03600	1.03600	1.09058	1.09058	1.07306	1.07306	1.02494	1.02494	1.00182	1.00182	1.00026	1.00026	1.00564	1.00564	1.03600	1.03600	1.09058	1.09058	1.07306	1.07306	1.02494	1.02494	1.00182	1.00182	1.00026	1.00026
	TANGENT	-0.02300	-0.02300	-0.10633	-0.10633	-0.27075	-0.27075	-0.43516	-0.43516	0.38916	0.38916	0.22475	0.22475	0.06033	0.06033	-0.02300	-0.02300	-0.10633	-0.10633	-0.27075	-0.27075	-0.43516	-0.43516	0.38916	0.38916	0.22475	0.22475	0.06033	0.06033	-0.02300	-0.02300

	MEMBER	L1-U2	L2-U3	L3-U4	L4-U5	L5-U6	L6-U7	L7-U8	L8-U9	L9-U10	U10-L11	U11-L12	U12-L13	U13-L14	U14-L15	U15-L16	L16-U17	U17-L18	L18-U19	L19-U20	U20-L21	L21-U22	U22-L23	U23-L24	U24-L25	U25-L26	U26-L27	U27-L28	U28-L29	U29-L30	U30-L31
DIAGONALS	LENGTH (FT.)	47.103	47.103	47.103	49.071	51.149	57.859	65.171	78.205	79.709	66.579	59.178	52.338	50.205	48.175	48.175	47.103	47.103	49.071	51.149	57.859	65.171	78.205	79.709	66.579	59.178	52.338	50.205	48.175	48.175	48.175
	SECANT	1.27305	1.27305	1.27305	1.32623	1.38240	1.56376	1.76137	2.11366	2.15429	1.79943	1.59940	1.41455	1.35689	1.30201	1.30201	1.27305	1.27305	1.32623	1.38240	1.56376	1.76137	2.11366	2.15429	1.79943	1.59940	1.41455	1.35689	1.30201	1.30201	1.30201
	TANGENT	0.78781	0.78781	0.78781	0.87114	0.95448	1.20223	1.44997	1.86214	-1.90814	-1.49597	-1.24823	-1.00048	-0.91714	-0.83381	-0.83381	0.78781	0.78781	0.87114	0.95448	1.20223	1.44997	1.86214	-1.90814	-1.49597	-1.24823	-1.00048	-0.91714	-0.83381	-0.83381	-0.83381

	MEMBER	L1-U1	L2-U2	L3-U3	L4-U4	L5-U5	L6-U6	L7-U7	L8-U8	L9-U9	L10-U10	L11-U11	L12-U12	L13-U13	L14-U14	L15-U15	L16-U16	L17-U17	L18-U18	L19-U19	L20-U20	L21-U21	L22-U22	L23-U23	L24-U24	L25-U25	L26-U26	L27-U27	L28-U28	L29-U29	L30-U30	L31-U31
VERTICALS	LENGTH (FT.)	30.000	30.000	30.000	33.083	36.167	45.333	54.500	69.750	85.000	69.750	54.500	45.333	36.167	33.083	30.000	30.000	30.000	33.083	36.167	45.333	54.500	69.750	85.000	69.750	54.500	45.333	36.167	33.083	30.000	30.000	30.000

	PANEL POINTS	1	2	3	4	5	6	7	8	9	10	11	12	13	14	15	16	17	18	19	20	21	22	23	24	25	26	27	28	29	30	31

NOTE: LENGTHS ARE WITHOUT CAMBER OR TEMPERATURE CORRECTION.
GEOMETRIC FUNCTIONS OF ANGLES OF MEMBERS ARE FROM THE HORIZONTAL.

NOTES:

1. FOR GENERAL NOTES, SEE SHEET NOS. C4 & C5.

NO.	SHEET	DESCRIPTION	DATE	BY
		RE' 'ONS		

WEST VIRGINIA DEPARTMENT OF HIGHWAYS
CHARLESTON, WEST VIRGINIA
INTERSTATE ROUTE NO. 77

I-77 OVER BLUESTONE RIVER
BRIDGE NO. 3010
GEOMETRIC DATA
CONTINUOUS TRUSS SPANS

DESIGNED BY: T.D.J.
DRAWN BY: K.F.M
CHECKED BY: H.L.T.

GREINER ENGINEERING SCIENCES, INC.
CONSULTING ENGINEERS
BALTIMORE, MARYLAND
CHARLESTON, WEST VIRGINIA

DATE: NOV. 1975
SCALE: NONE
SHEET C35

PUBLIC ROADS DIV.	STATE DIST. NO.	STATE PROJ. NO.	FEDERAL PROJ. NO.	FISCAL YEAR	COUNTY	SHEET NO.	TOTAL SHEETS
W. VA.	10	328-77-17.42	I-77 206(17)		MERCER	C36	86

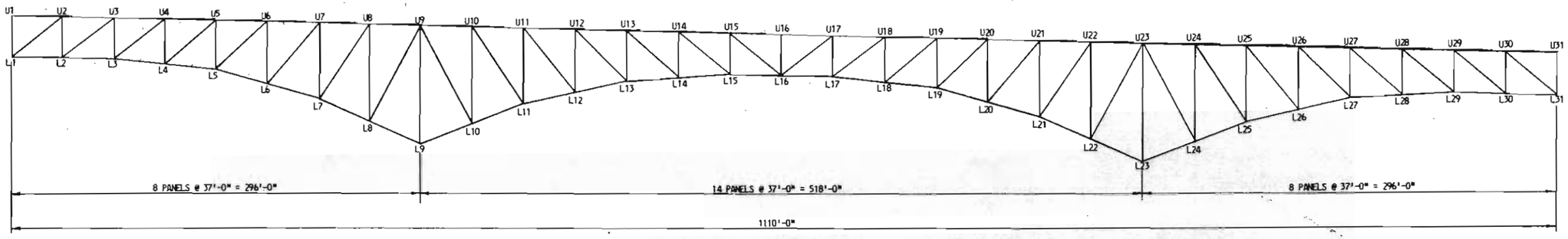

ELEVATION

PANEL DEAD LOADS - KIPS PER TRUSS

	PANEL POINTS	1	2	3	4	5	6	7	8	9	10	11	12	13	14	15	16	17	18	19	20	21	22	23	24	25	26	27	28	29	30	31 ①
UPPER CHORD	SLAB & FUTURE W.S.	52.2	104.4	104.4	104.4	104.4	104.4	104.4	104.4	104.4	104.4	104.4	104.4	104.4	104.4	104.4	104.4	104.4	104.4	104.4	104.4	104.4	104.4	104.4	104.4	104.4	104.4	104.4	104.4	104.4	104.4	114.3
	PARAPET	10.6	21.3	21.3	21.3	21.3	21.3	21.3	21.3	21.3	21.3	21.3	21.3	21.3	21.3	21.3	21.3	21.3	21.3	21.3	21.3	21.3	21.3	21.3	21.3	21.3	21.3	21.3	21.3	21.3	21.3	23.3
	FLOOR STEEL	8.0	15.9	15.9	15.9	15.9	15.9	15.9	15.9	15.9	15.9	15.9	15.9	15.9	15.9	15.9	15.9	15.9	15.9	15.9	15.9	15.9	15.9	15.9	15.9	15.9	15.9	15.9	15.9	15.9	15.9	16.5
	UTILITIES & ACCESS	1.9	3.7	3.7	3.7	3.7	3.7	3.7	3.7	3.7	3.7	3.7	3.7	3.7	3.7	3.7	3.7	3.7	3.7	3.7	3.7	3.7	3.7	3.7	3.7	3.7	3.7	3.7	3.7	3.7	3.7	4.1
	TRUSS	5.4	13.2	11.9	11.3	13.9	16.4	19.7	25.4	49.4	26.9	20.5	18.1	16.1	15.4	14.7	12.3	14.7	15.4	16.1	18.1	20.5	26.9	49.4	25.4	19.7	16.4	13.9	11.3	11.9	13.2	5.4
	BRACING	2.6	3.5	2.5	3.5	2.5	4.4	3.0	6.1	9.3	7.2	3.7	4.9	2.5	3.5	2.5	3.6	2.5	3.5	2.5	4.9	3.7	7.2	9.3	6.1	3.0	4.4	2.5	3.5	2.5	3.5	2.6
	SUB-TOTAL	80.7	162.0	159.7	160.1	161.7	166.1	168.0	176.8	204.0	179.4	169.5	168.3	163.9	164.2	162.5	161.2	162.5	164.2	163.9	168.3	169.5	179.4	204.0	176.8	168.0	166.1	161.7	160.1	159.7	162.0	166.2
LOWER CHORD	SLAB & FUTURE W.S.	-	-	-	-	-	-	-	-	-	-	-	-	-	-	-	-	-	-	-	-	-	-	-	-	-	-	-	-	-	-	-
	PARAPET	-	-	-	-	-	-	-	-	-	-	-	-	-	-	-	-	-	-	-	-	-	-	-	-	-	-	-	-	-	-	-
	FLOOR STEEL	-	-	-	-	-	-	-	-	-	-	-	-	-	-	-	-	-	-	-	-	-	-	-	-	-	-	-	-	-	-	-
	UTILITIES & ACCESS	-	-	-	-	-	-	-	-	-	-	-	-	-	-	-	-	-	-	-	-	-	-	-	-	-	-	-	-	-	-	-
	TRUSS	10.1	11.5	10.7	12.1	14.6	19.0	23.4	32.0	53.1	34.5	24.8	19.8	16.1	14.4	15.2	16.5	15.2	14.4	16.1	19.8	24.8	34.5	53.1	32.0	23.4	19.0	14.6	12.1	10.7	11.5	10.1
	BRACING	2.7	3.8	2.5	3.4	2.6	4.7	3.5	7.5	13.4	8.7	3.7	4.8	2.5	3.4	2.5	4.5	2.5	3.4	2.5	4.8	3.7	8.7	13.4	7.5	3.5	4.7	2.6	3.4	2.5	3.8	2.7
	SUB-TOTAL	12.8	15.3	13.2	15.5	17.2	23.7	26.9	39.5	66.5	43.2	28.5	24.6	18.6	17.8	17.7	21.0	17.7	17.8	18.6	24.6	28.5	43.2	66.5	39.5	26.9	23.7	17.2	15.5	13.2	15.3	12.8
	TOTAL PANEL LOAD	93.5	177.3	172.9	175.6	178.9	189.8	194.9	216.3	270.5	222.6	198.0	192.9	182.5	182.0	180.2	182.2	180.2	182.0	182.5	192.9	198.0	222.6	270.5	216.3	194.9	189.8	178.9	175.6	172.9	177.3	179.0

LATERAL PANEL LOADS: WIND (75 LBS./SQ. FT.) - KIPS

PANEL POINTS	1	2	3	4	5	6	7	8	9	10	11	12	13	14	15	16	17	18	19	20	21	22	23	24	25	26	27	28	29	30	31 ①
UPPER CHORD	11.8	25.3	25.0	25.0	25.4	26.3	27.3	29.5	37.9	30.2	27.8	26.8	25.8	24.9	24.5	22.5	24.5	24.9	25.8	26.8	27.8	30.2	37.9	29.5	27.3	26.3	25.4	25.0	25.0	25.3	18.4
LOWER CHORD	6.7	9.2	8.7	9.1	9.9	10.9	11.8	15.6	12.9	15.5	12.8	11.5	10.4	9.5	8.7	10.7	8.7	9.5	10.4	11.5	12.8	15.5	12.9	15.6	11.8	10.9	9.9	9.1	8.7	9.2	6.7
TOTAL PANEL LOAD	18.5	34.5	33.7	34.1	35.3	37.2	39.1	45.1	50.8	45.7	40.6	38.3	36.2	34.4	33.2	33.2	33.2	34.4	36.2	38.3	40.6	45.7	50.8	45.1	39.1	37.2	35.3	34.1	33.7	34.5	25.1

① INCLUDES LOADS FROM BEAM SPAN B.

NOTES:

1. FOR GENERAL NOTES, SEE SHEET NOS. C4 & C5.

NO.	SHEET	DESCRIPTION	DATE	BY

REVISIONS

WEST VIRGINIA DEPARTMENT OF HIGHWAYS
CHARLESTON, WEST VIRGINIA
INTERSTATE ROUTE NO. 77

I-77 OVER BLUESTONE RIVER
BRIDGE NO 3010
LOADING DATA - CONTINUOUS TRUSS SPANS

DESIGNED BY: T.D.J.
DRAWN BY: K.F.M.
CHECKED BY: C.M.D.

GREINER ENGINEERING SCIENCES, INC.
CONSULTING ENGINEERS
BALTIMORE, MARYLAND
CHARLESTON, WEST VIRGINIA

DATE: NOV. 1975
SCALE: NONE
SHEET C36

PUBLIC ROADS DIV.	STATE DIST. NO.	STATE PROJ. NO.	FEDERAL PROJ. NO.	FISCAL YEAR	COUNTY	SHEET NO.	TOTAL SHEETS
W. VA.	10	329-77-17.42	I-77 206(17)		MERCER	C37	86

UPPER CHORD

MEMBER	MEMBER FORCES (KIPS) DEAD LOAD	LIVE LOAD	IMPACT	WIND	DESIGN	LOAD GROUP	r (INCHES)	K	KL/r	UNIT STRESS (K.S.I.) ALLOW.④	ACTUAL	AREA REQ'D (SQ. IN.)	AREA FURNISHED (SQ. IN.) GROSS	EFFECT. GROSS	NET	SECTION DESCRIPTION
U1 -U2	0	0	0	±50	-50	II	7.78	1.00	57	20.2	1.0	2.0	48.25			2 WEB PLS 3/4 x 20 2 COVER PLS 1/2 x 18 1/4
U2 -U3	-207	113 -181	11 -21	±159	-409	I	7.78	1.00	57	20.2	8.5	20.2	48.25			2 WEB PLS 3/4 x 20 2 COVER PLS 1/2 x 18 1/4
U3 -U4	-194	225 -302	23 -36	① ±154	-686	III	7.78	1.00	57	25.3	14.2	27.1	48.25			2 WEB PLS 3/4 x 20 2 COVER PLS 1/2 x 18 1/4
U4 -U5 *	31	308 -330	29 -40	① ±203	571 -542	III III	7.78	1.00	57	33.8 25.3	15.6 11.2	16.9 21.4	48.25		36.69	2 WEB PLS 3/4 x 20 2 COVER PLS 1/2 x 18 1/4
U5 -U6 *	396	374 -308	37 -36	① ±247	1054	III	7.60	1.00	58	33.8	26.0	31.2	53.00		40.59	2 WEB PLS 7/8 x 20 2 COVER PLS 1/2 x 18
U6 -U7 *	755	373 -215	37 -25	±418	1165	I	7.44	1.00	60	27.0	26.2	43.1	57.75		44.50	2 WEB PLS 1 x 20 2 COVER PLS 1/2 x 17 3/4
U7 -U8 *	1123	375 -126	37 -17	±403	1535	I	7.05	1.00	63	27.0	26.3	56.9	74.50		58.30	2 WEB PLS 1 7/16 x 20 2 COVER PLS 1/2 x 17
U8 -U9 *	1367	381 -66	38 -11	±366	1786	I	6.85	1.00	65	27.0	26.3	66.1	86.25		67.94	2 WEB PLS 1 3/4 x 20 2 COVER PLS 1/2 x 16 1/4
U9 -U10 *	1308	358 -51	36 -6	±343	1702	I	6.85	1.00	65	27.0	25.1	63.0	86.25		67.94	2 WEB PLS 1 3/4 x 20 2 COVER PLS 1/2 x 16 1/4
U10 -U11 *	976	301 -70	31 -10	±237	1308	I	7.31	1.00	61	27.0	27.0	48.4	62.50		48.41	2 WEB PLS 1 1/8 x 20 2 COVER PLS 1/2 x 17 1/2
U11 -U12 *	497	219 -103	25 -18	±104	741	I	7.78	1.00	57	27.0	20.2	27.4	48.25		36.69	2 WEB PLS 3/4 x 20 2 COVER PLS 1/2 x 18 1/4
U12 -U13	-31	163 -177	20 -22	① ±110	262 -340	III III	7.78	1.00	57	33.8 25.3	7.1 7.0	7.8 13.5	48.25		36.69	2 WEB PLS 3/4 x 20 2 COVER PLS 1/2 x 18 1/4
U13 -U14	-541	134 -272	16 -27	±302	-840	I	7.78	1.00	57	20.2	17.4	41.6	48.25			2 WEB PLS 3/4 x 20 2 COVER PLS 1/2 x 18 1/4
U14 -U15	-930	147 -377	17 -38	±388	-1345	I	7.44	1.00	60	19.9	18.8	67.6	71.56			2 WEB PLS 1 1/4 x 20 2 COVER PLS 5/8 x 17 1/4
U15 -U16	-1042	147 -403	17 -41	±418	-1486	I	7.28	1.00	61	19.7	18.9	75.4	78.75			2 WEB PLS 1 7/16 x 20 2 COVER PLS 5/8 x 17

LOWER CHORD

L1 -L2	207	181 -113	21 -11	① ±107	516	III	7.78	1.00	57	33.8	14.1	15.3	48.25		36.69	2 WEB PLS 3/4 x 20 2 COVER PLS 1/2 x 18 1/4
L2 -L3	194	302 -225	36 -23	① ±188	720	III	7.78	1.00	57	33.8	19.6	21.3	48.25		36.69	2 WEB PLS 3/4 x 20 2 COVER PLS 1/2 x 18 1/4
L3 -L4 *	-31	331 -307	39 -31	① ±245	584 -614	III III	7.78	1.00	57	33.8 25.3	15.9 12.7	17.3 24.3	48.25		36.69	2 WEB PLS 3/4 x 20 2 COVER PLS 1/2 x 18 1/4
L4 -L5 *	-396	308 -375	37 -38	±298	-1107	III	7.78	1.00	57	25.3	22.9	43.8	48.25			2 WEB PLS 3/8 x 20 2 COVER PLS 1/2 x 18 1/4
L5 -L6	-779	222 -386	26 -38	① ±311	-1514	III	7.25	1.00	63	24.3	24.2	62.3	62.50			2 WEB PLS 1 x 20 2 COVER PLS 5/8 x 18
L6 -L7	-1159	130 -387	17 -39	±619	-1585	I	7.19	1.00	64	19.4	19.0	81.7	83.44			2 WEB PLS 1 9/16 x 20 2 COVER PLS 5/8 x 16 3/4
L7 -L8	-1487	72 -415	9 -41	±620	-1943	I	7.02	1.00	69	18.7	17.9	103.9	108.25			2 WEB PLS 2 1/8 x 20 2 COVER PLS 3/4 x 15 1/2
L8 -L9	-1761	54 -457	6 -45	±739	-2263	I	6.82	1.00	71	18.4	17.7	123.0	127.50			2 WEB PLS 2 5/8 x 20 2 COVER PLS 3/4 x 15
L9 -L10 *	-1764	54 -457	6 -46	±717	-2267	I	6.82	1.00	71	18.4	17.8	123.2	127.50			2 WEB PLS 2 5/8 x 20 2 COVER PLS 3/4 x 15
L10 -L11 *	-1426	56 -391	6 -39	±475	-1856	I	7.17	1.00	68	18.9	18.7	98.2	99.00			2 WEB PLS 1 7/8 x 20 2 COVER PLS 3/4 x 16
L11 -L12 *	-1011	72 -312	11 -33	±274	-1356	I	7.51	1.00	61	19.7	19.5	68.8	69.38			2 WEB PLS 1 3/16 x 20 2 COVER PLS 5/8 x 17 1/2
L12 -L13 *	-515	107 -227	18 -25	±199	-767	I	7.78	1.00	59	20.0	15.9	38.4	48.25			2 WEB PLS 3/4 x 20 2 COVER PLS 1/2 x 18 1/4
L13 -L14	31	178 -164	22 -19	① ±219	450 -371	III III	7.78	1.00	57	33.8 25.2	12.3 7.7	13.3 14.7	48.25		36.69	2 WEB PLS 3/4 x 20 2 COVER PLS 1/2 x 18 1/4
L14 -L15	542	272 -134	27 -16	① ±297	1138	III	7.78	1.00	57	33.8	31.0	33.7	48.25		36.69	2 WEB PLS 3/4 x 20 2 COVER PLS 1/2 x 18 1/4
L15 -L16	930	377 -147	38 -17	① ±350	1695	III	7.21	1.00	62	33.8	32.2	50.2	67.50		52.56	2 WEB PLS 1 1/4 x 20 2 COVER PLS 1/2 x 17 1/2

VERTICALS

MEMBER	MEMBER FORCES (KIPS) DEAD LOAD	LIVE LOAD	IMPACT	WIND	DESIGN	LOAD GROUP	r (INCHES)	K	KL/r	UNIT STRESS (K.S.I.) ALLOW.④	ACTUAL	AREA REQ'D (SQ. IN.)	AREA FURNISHED (SQ. IN.) GROSS	EFFECT. GROSS	NET	SECTION DESCRIPTION	
L1 -U1 *	-166	0 -96	0 -29	±47	-291	I	3.34	1.00	108	11.6	9.4	25.1	30.84			2 FLG. PLS 3/4 x 14 1 WEB PL 9/16 x 17 1/2	1
L2 -U2	5	107 -95	14 -10	① ±70	196 -170	III III	3.23	1.00	112	33.8 13.5	9.0 6.2	5.8 12.6	27.48		21.86	2 FLG. PLS 5/8 x 14 1 WEB PL 9/16 x 17 3/4	2
L3 -U3 *	-170	76 -109	11 -13	±111	-292	I	3.23	1.00	112	10.8	10.6	27.0	27.48			2 FLG. PLS 5/8 x 14 1 WEB PL 9/16 x 17 3/4	3
L4 -U4 *	-341	37 -125	6 -14	±74	-480	I	3.98	1.00	100	13.3	12.7	36.1	37.70			2 FLG. PLS 7/8 x 16 1 WEB PL 9/16 x 17 1/4	4
L5 -U5 *	-488	23 -149	3 -16	±86	-653	I	4.62	1.00	94	14.5	14.3	45.0	45.56			2 FLG. PLS 1 x 18 1 WEB PL 9/16 x 17	5
L6 -U6	-517	1 -146	0 -19	±128	-682	I	② 6.21	1.00	88	15.7	15.3	43.4	55.97	44.72		2 WEB PLS 1 x 18 2 COVER PLS 9/16 x 17 3/4	6
L7 -U7	-618	1 -165	0 -21	±125	-804	I	7.20	1.00	91	15.1	14.9	53.2	54.00			2 WEB PLS 7/8 x 18 2 COVER PLS 5/8 x 18	7
L8 -U8	-537	48 -188	5 -23	±270	-748	I	7.88	③ 1.04	111	11.0	10.8	68.0	69.13			2 WEB PLS 1 1/8 x 21 2 COVER PLS 5/8 x 17 1/2	8
L9 -U9	-1260	3 -277	1 -31	±820	- 2080	II	9.32	③ 1.06	116	12.6	12.2	165.1	170.00			2 WEB PLS 2 3/8 x 24 2 COVER PLS 1 3/4 x 16	9
L10 -U10	-668	25 -190	3 -20	±367	-878	I	7.40	③ 1.04	117	9.9	9.6	88.7	91.50			2 WEB PLS 1 11/16 x 21 2 COVER PLS 5/8 x 16 1/2	10
L11 -U11 *	-757	19 -208	2 -21	±183	-986	I	6.62	1.00	99	13.5	13.1	73.0	75.25			2 WEB PLS 1 1/2 x 18 2 COVER PLS 5/8 x 17	11
L12 -U12	-682	23 -198	3 -20	±197	-900	I	① 5.85	1.00	93	14.7	14.0	61.2	75.38	64.13		2 WEB PLS 1 9/16 x 18 2 COVER PLS 9/16 x 17	12
L13 -U13 *	-620	28 -186	3 -19	±129	-825	I	4.75	1.00	91	15.0	14.6	55.0	56.46			2 FLG. PLS 1 5/16 x 18 1 WEB PL 9/16 x 16 3/8	13
L14 -U14 *	-481	35 -161	4 -17	±112	-659	I	4.16	1.00	95	14.2	13.4	46.4	49.28			2 FLG. PLS 1 1/4 x 16 1 WEB PL 9/16 x 16 1/2	14
L15 -U15 *	-254	55 -122	7 -14	±53	-390	I	3.42	1.00	105	12.2	11.4	32.0	34.20			2 FLG. PLS 7/8 x 14 1 WEB PL 9/16 x 17 1/4	15
L16 -U16	-161	0 -93	0 -23	±25	-277	I	3.23	1.00	112	10.8	10.1	25.6	27.48			2 FLG. PLS 5/8 x 14 1 WEB PL 9/16 x 17 3/4	16

① ALSO INCLUDES LONGITUDINAL FORCE.

② r BASED ON EFFECTIVE GROSS AREA.

③ EFFECTIVE LENGTH FACTOR ON GROSS SECTION FOR MEMBER WITH REDUCED MOMENT OF INERTIA DUE TO MANHOLES AT SWAY FRAME CONNECTIONS.

④ ALLOWABLE UNIT STRESSES SHOWN ARE AT THE PERCENTAGE OF THE BASIC UNIT STRESS PERMITTED UNDER A.A.S.H.T.O. 1.2.22

NOTES:

1. FOR GENERAL NOTES, SEE SHEET NOS. C4 & C5.
2. FOR MEMBERS INDICATED BY AN ASTERISK (*), FORCES AND STRESS ARE BASED ON THE ANALOGOUS MEMBER BEYOND PANEL 16 WHICH CONTROLLED DESIGN.
3. FOR MEMBER SECTIONS AND OTHER NOTES, SEE SHEET NO. C38.
4. ALL STEEL SHALL BE A.S.T.M. A588 WEATHERING STEEL.

NO.	SHEET	DESCRIPTION	DATE	BY

REVISIONS

WEST VIRGINIA DEPARTMENT OF HIGHWAYS
CHARLESTON, WEST VIRGINIA
INTERSTATE ROUTE NO. 77

I-77 OVER BLUESTONE RIVER
BRIDGE NO. 3010
CONTINUOUS TRUSS SPANS - STRESS DATA I

DESIGNED BY: T.D.J.
DRAWN BY: K.F.M.
CHECKED BY: C.M.D.

GREINER ENGINEERING SCIENCES, INC.
CONSULTING ENGINEERS
BALTIMORE, MARYLAND
CHARLESTON, WEST VIRGINIA

DATE: NOV. 1975
SCALE: NONE
SHEET C37

PUBLIC ROADS DIV.	STATE DIST. NO.	STATE PROJ. NO.	FEDERAL PROJ. NO.	FISCAL YEAR	COUNTY	SHEET NO.	TOTAL SHEETS
W. VA.	10	328-77-17.42	I-77 2(36)17		MERCER	C38	86

DIAGONALS

MEMBER	MEMBER FORCES (KIPS) DEAD LOAD	LIVE LOAD	IMPACT	WIND	DESIGN	LOAD GROUP	r (INCHES)	K	KL/r	UNIT STRESS (K.S.I.) ALLOW.③	ACTUAL	AREA REQ'D (SQ. IN.)	AREA FURNISHED (SQ. IN.) GROSS	EFFECT. GROSS	NET	SECTION DESCRIPTION	
L1 - U2 *	-268	153 -253	15 -30	±208	-551	I	4.79	1.00	120	9.3	9.1	59.2	60.82			2 FLG. PLS 1 7/16 x 18 1 WEB PL 9/16 x 16 1/8	1
L2 - U3 *	17	160 -186	15 -24	① ±98	290 -291	III III	4.13	1.00	② 140	33.8 8.6	8.8 6.9	8.6 33.8	42.44		32.88	2 FLG. PLS 1 1/16 x 16 1 WEB PL 1/2 x 16 7/8	2
L3 - U4 *	291	160 - 93	18 -15	±119	469	I	3.23	1.00	179	27.0	23.9	17.4	24.69		19.63	2 FLG. PLS 9/16 x 14 1 WEB PL 1/2 x 17 7/8	3
L4 - U5 *	495	185 -56	20 -10	±124	700	I	3.51	1.00	172	27.0	26.5	25.9	34.81		16.38	2 FLG. PLS 15/16 x 14 1 WEB PL 1/2 x 17 1/8	4
L5 - U6 *	508	161 -1	20 0	±99	689	I	3.51	1.00	179	27.0	26.1	25.5	34.81		26.38	2 FLG. PLS 15/16 x 14 1 WEB PL 1/2 x 17 1/8	5
L6 - U7 *	588	172 -1	23 0	±160	783	I	4.07	1.00	174	27.0	26.0	29.0	38.56		30.13	2 FLG. PLS 15/16 x 16 1 WEB PL 1/2 x 17 1/8	6
L7 - U8 *	439	191 -62	23 -6	±160	653	I	4.04	1.00	198	27.0	22.7	24.2	36.63		28.75	2 FLG. PLS 7/8 x 16 1 WEB PL 1/2 x 17 1/4	7
L8 - U9 *	540	189 -47	23 5	±300	752	I	7.12	1.00	134	27.0	23.6	27.9	45.25		31.81	2 WEB PLS 3/4 x 18 2 COVER PLS 1/2 x 18 1/4	8
U9 - L10	667	191 -25	19 -3	±404	877	I	7.04	1.00	136	27.0	26.3	32.5	47.50		33.36	2 WEB PLS 13/16 x 18 2 COVER PLS 1/2 x 18 1/4	9
U10 - L11	597	192 -32	19 -4	±153	808	I	4.60	1.00	174	27.0	25.1	29.9	40.13		32.25	2 FLG. PLS 7/8 x 18 1 WEB PL 1/2 x 17 1/4	10
U11 - L12	767	230 -26	23 -3	±235	1020	I	4.73	1.00	150	27.0	26.3	37.8	48.88		38.75	2 FLG. PLS 1 1/8 x 18 1 WEB PL 1/2 x 16 3/4	11
U12 - L13	743	239 -35	24 -4	±196	1006	I	4.73	1.00	133	27.0	26.0	37.3	48.88		38.75	2 FLG. PLS 1 1/8 x 18 1 WEB PL 1/2 x 16 3/4	12
U13 - L14	691	239 -50	25 -7	±193	955	I	4.21	1.00	143	27.0	25.8	35.4	48.25		37.00	2 FLG. PLS 1 1/4 x 16 1 WEB PL 1/2 x 16 1/2	13
U14 - L15	507	214 -71	24 -9	±133	745	I	3.57	1.00	162	27.0	26.0	27.6	38.19		28.63	2 FLG PLS 1 1/16 x 14 1 WEB PL 1/2 x 16 7/8	14
U15 - L16	146	163 -125	20 -17	±81	329	I	3.23	1.00	179	27.0	16.8	12.2	24.69		19.63	2 FLG. PLS 9/16 x 14 1 WEB PL 1/2 x 17 1/8	15

① ALSO INCLUDES LONGITUDINAL FORCE

② MAXIMUM ALLOWED PER A.A.S.H.T.O. 1.7.11

③ ALLOWABLE UNIT STRESSES SHOWN ARE AT THE PERCENTAGE OF THE BASIC UNIT STRESS PERMITTED UNDER A.A.S.H.T.O. 1.2.22

* FORCES AND STRESSES ARE BASED ON THE ANALOGOUS MEMBER BEYOND PANEL 16 WHICH CONTROLLED DESIGN.

REACTIONS AT ℄ OF PIN KIPS/TRUSS

PANEL POINT	DEAD LOAD ⑤	LIVE LOAD	IMPACT	75 P.S.F. TRANSV. WIND	100 P.L.F. WIND ON LIVE LOAD	LONG. FORCE ④	20 P.S.F. UPWARD OVERTURNING	GROUP I	GROUP II	GROUP III	GROUP II + UPWARD OVERTURNING	GROUP III + 30% UPWARD OVERTURNING
L1	260	184 -95	22 -9	±100	±19	±25	-17 -106	466 156	360 160	540 82	343 54	535 50
L9	2659	600 -41	56 -4	±1183	±151	±21	-61 -374	3315 2614	3842 1476	3842 2087	3781 1102	3824 1975
L23	2659	600 -41	56 -4	±1183	±151	±21	-61 -374	3315 2614	3842 1476	3842 2087	3781 1102	3824 1975
L31***	346	207 -95	25 -9	±107	±22	±17	-20 -123	578 242	453 239	649 171	433 116	643 134

NEGATIVE REACTIONS DENOTE UPLIFT.

④ INCLUDES FRICTION AND/OR TRACTION.

⑤ REACTIONS UNDER DESIGN DEAD LOADS.

*** INCLUDES LOADS FROM BEAM SPAN B.

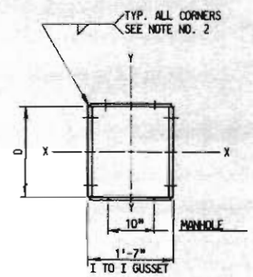

D IN.	NO. 1 1/8"ϕ HOLES PER WEB PL ⑤
20	3

CHORD MEMBERS

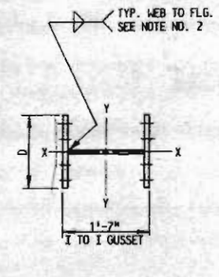

D IN.	NO. 1 1/8"ϕ HOLES PER FLANGE PL
14**	2
14	4
16	4
18	4

** L1-U1, L2-U2, L16-U16

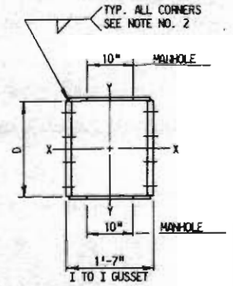

D IN.	NO. 1 1/8"ϕ HOLES PER WEB PL
18	4
21	4
24	5

VERTICAL MEMBERS

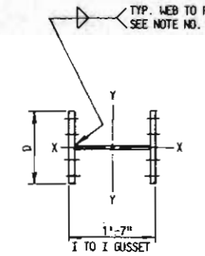

D IN.	NO. 1 1/8"ϕ HOLES PER FLANGE PL ⑤
14	4
16	4
18	4

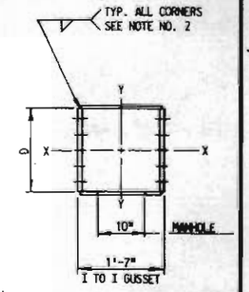

D IN.	NO. 1 1/8"ϕ HOLES PER WEB PL ⑤
18	5

DIAGONAL MEMBERS

③ THE NUMBER OF HOLES INDICATED IS THE MAXIMUM NUMBER OF HOLES THAT CAN BE TAKEN OUT AND STILL MAINTAIN REQUIRED NET AREA.

NOTES:

1. FOR GENERAL NOTES, SEE SHEET NOS. C4 & C5.
2. MATERIAL THICKNESS OF THICKER PART JOINED — MINIMUM SIZE OF FILLET WELD
   - UP TO 1 1/2" — 5/16"
   - 1 1/2" TO 2 1/4" — 3/8"
   - OVER 2 1/4" — 1/2"
3. BOLTS USED FOR CONNECTION OF GUSSETS, ANGLES AND PLATES TO THE VERTICAL FACE OF MAIN MEMBERS SHALL BE 1" DIA. ASTM A325 TYPE 3 BOLTS. ALL OTHER BOLTS SHALL BE 7/8"ϕ DIA. ASTM A325 TYPE 3 BOLTS.
4. DRAIN HOLES IN THE TRUSS MEMBERS SHALL BE PROVIDED WHERE NECESSARY TO PREVENT POCKETING OF WATER. MEMBERS SHALL BE FILLED WITH MASTIC TO PROPERLY DRAIN TO DRAIN HOLES, MANHOLES AND HANDHOLES.
5. ALL STEEL SHALL BE A.S.T.M. A588 WEATHERING STEEL.

NO.	SHEET	DESCRIPTION	DATE	BY

REVISIONS

WEST VIRGINIA DEPARTMENT OF HIGHWAYS
CHARLESTON, WEST VIRGINIA
INTERSTATE ROUTE NO. 77

I-77 OVER BLUESTONE RIVER
BRIDGE NO. 3010
CONTINUOUS TRUSS SPANS - STRESS DATA II

DESIGNED BY: T.D.J.
DRAWN BY: O.A.B.
CHECKED BY: C.M.D.

GREINER ENGINEERING SCIENCES, INC.
CONSULTING ENGINEERS
BALTIMORE, MARYLAND
CHARLESTON, WEST VIRGINIA

DATE: NOV. 1975
SCALE: NONE
SHEET C38

PUBLIC ROADS DIV.	STATE DIST. NO.	STATE PROJ. NO.	FEDERAL PROJ. NO.	FISCAL YEAR	COUNTY	SHEET NO.	TOTAL SHEETS
W. VA.	10	328-77-17.42	I-77 2(36)17		MERCER	C39	86

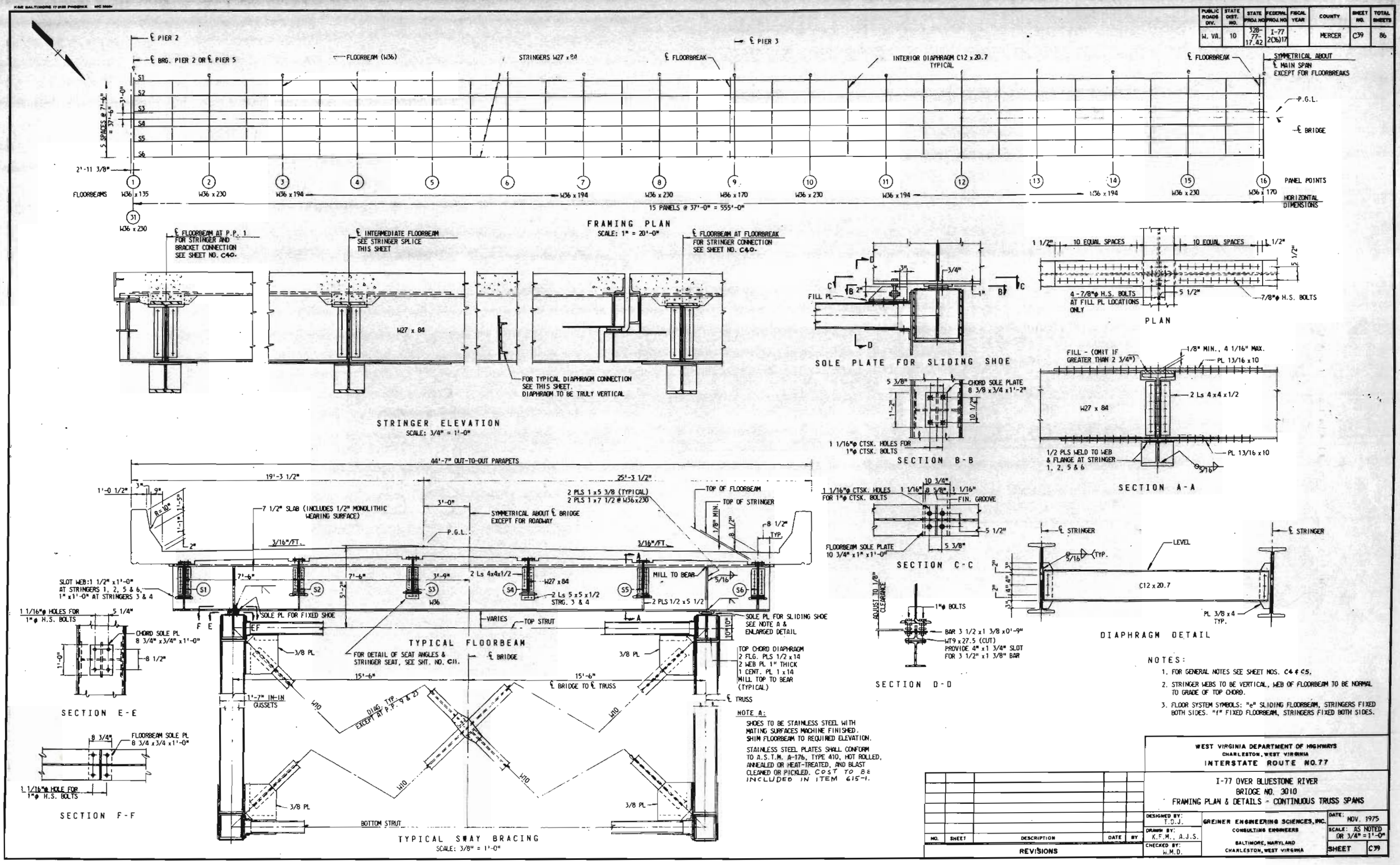

NOTE A:

SHOES TO BE STAINLESS STEEL WITH MATING SURFACES MACHINE FINISHED. SHIM FLOORBEAM TO REQUIRED ELEVATION.

STAINLESS STEEL PLATES SHALL CONFORM TO A.S.T.M. A-176, TYPE 410, HOT ROLLED, ANNEALED OR HEAT-TREATED, AND BLAST CLEANED OR PICKLED. COST TO BE INCLUDED IN ITEM 615-1.

NOTES:

1. FOR GENERAL NOTES SEE SHEET NOS. C4 & C5.
2. STRINGER WEBS TO BE VERTICAL, WEB OF FLOORBEAM TO BE NORMAL TO GRADE OF TOP CHORD.
3. FLOOR SYSTEM SYMBOLS: "e" SLIDING FLOORBEAM, STRINGERS FIXED BOTH SIDES. "f" FIXED FLOORBEAM, STRINGERS FIXED BOTH SIDES.

NO.	SHEET	DESCRIPTION	DATE	BY

REVISIONS

WEST VIRGINIA DEPARTMENT OF HIGHWAYS
CHARLESTON, WEST VIRGINIA
INTERSTATE ROUTE NO. 77

I-77 OVER BLUESTONE RIVER
BRIDGE NO. 3010
FRAMING PLAN & DETAILS - CONTINUOUS TRUSS SPANS

DESIGNED BY: T.D.J.
DRAWN BY: K.F.M., A.J.S.
CHECKED BY: W.M.D.

GREINER ENGINEERING SCIENCES, INC.
CONSULTING ENGINEERS
BALTIMORE, MARYLAND
CHARLESTON, WEST VIRGINIA

DATE: NOV. 1975
SCALE: AS NOTED OR 3/4" = 1'-0"
SHEET C39

PUBLIC ROADS DIV.	STATE DIST. NO.	STATE PROJ. NO.	FEDERAL PROJ. NO.	FISCAL YEAR	COUNTY	SHEET NO.	TOTAL SHEETS
W. VA.	10	328-77-17.42	I-77 2069 17		MERCER	C40	86

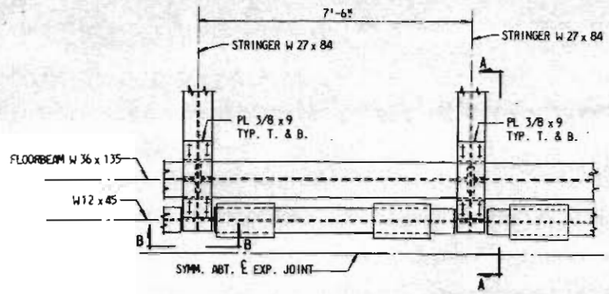

PLAN
EXPANSION JOINT AT PIER 2

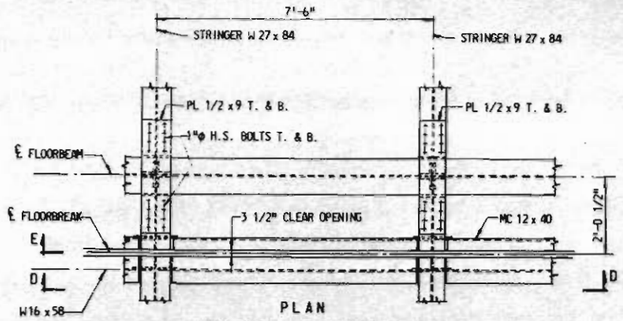

PLAN
TYPICAL FLOORBREAK

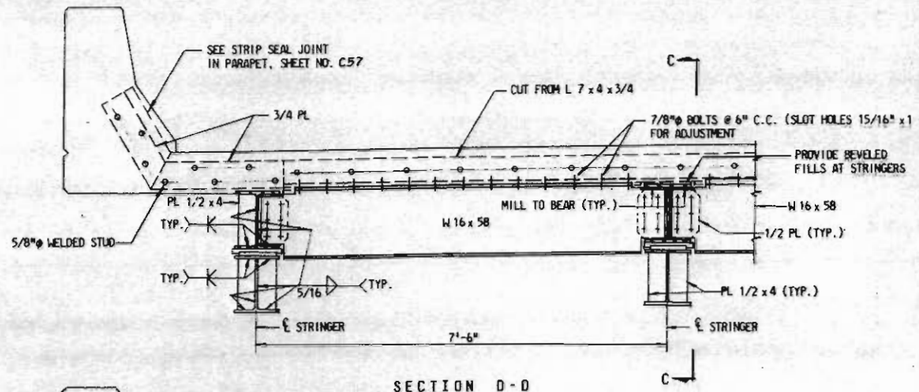

SECTION D-D
SCALE: 3/4" = 1'-0"

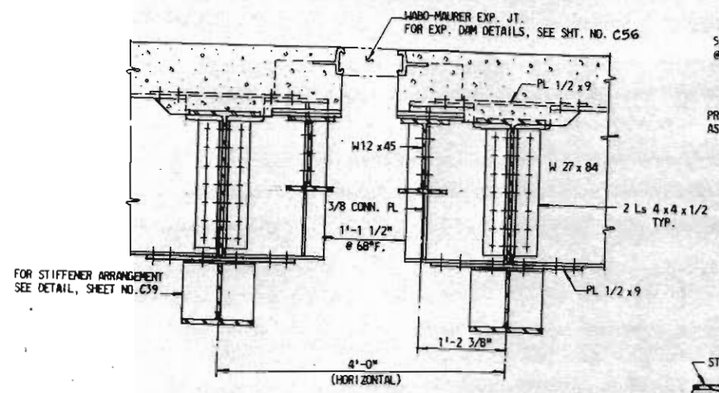

SECTION A-A
SCALE: 1" = 1'-0"

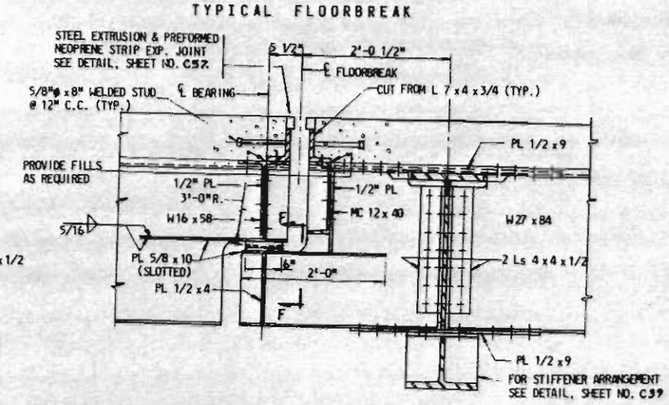

SECTION C-C
SCALE: 1" = 1'-0"

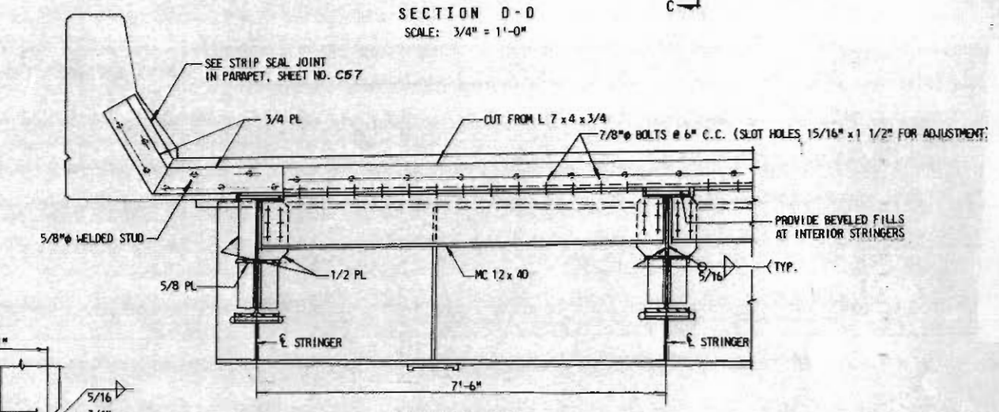

SECTION E-E
SCALE: 3/4" = 1'-0"

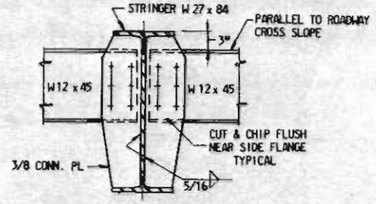

SECTION B-B
SCALE: 1" = 1'-0"

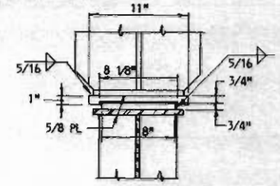

SECTION F-F
SCALE: 1 1/2" = 1'-0"

NOTES:

1. FOR GENERAL NOTES, SEE SHEET NOS. C4 & C5.
2. ALL BOLTS ARE 7/8"φ H.S. BOLTS UNLESS NOTED.
3. FOR BEAM CONNECTION AND FLOORBREAK AT PIER 1, SEE SHEET NO. C21.
4. FOR BEAM CONNECTION AND FLOORBREAK AT PIER 5, SEE SHEET NO. C22.

NO.	SHEET	DESCRIPTION	DATE	BY

REVISIONS

WEST VIRGINIA DEPARTMENT OF HIGHWAYS
CHARLESTON, WEST VIRGINIA
INTERSTATE ROUTE NO. 77

I-77 OVER BLUESTONE RIVER
BRIDGE NO. 3010
MISCELLANEOUS DETAILS - FLOOR SYSTEM & EXPANSION DAMS

DESIGNED BY: E.G.R. & T.D.J.
DRAWN BY: A.J.S.
CHECKED BY: H.M.D.

GREINER ENGINEERING SCIENCES, INC.
CONSULTING ENGINEERS
BALTIMORE, MARYLAND
CHARLESTON, WEST VIRGINIA

DATE: NOV. 1975
SCALE: 1/2" = 1'-0" OR AS NOTED
SHEET C40

PUBLIC ROADS DIV.	STATE DIST. NO.	STATE PROJ. NO.	FEDERAL PROJ. NO.	FISCAL YEAR	COUNTY	SHEET NO.	TOTAL SHEETS
W. VA.	10	328-77-17.42	I-77 206(17)		MERCER	C41	86

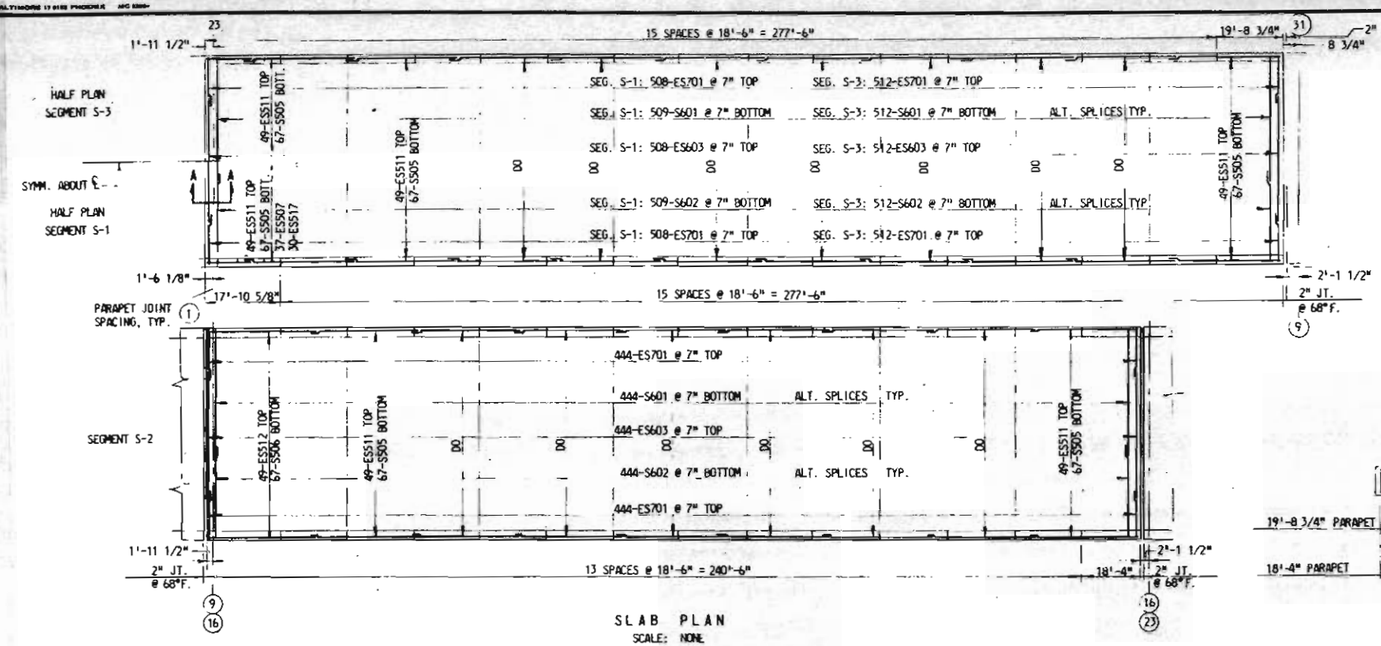

SLAB PLAN
SCALE: NONE

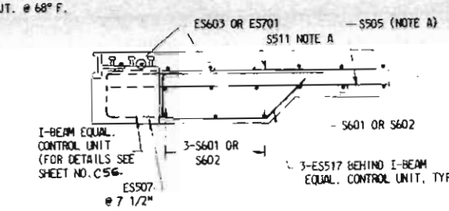

SECTION A-A
SCALE: 1" = 1'-0"

NOTE A:
WHERE REINF. BARS INTERFERE WITH I-BEAM EQUAL. CONTROL UNITS ADJUST BY INCREASING THE LENGTH OF LAP IN THE SPLICE.

* ES DENOTES EPOXY COATED REINFORCING BARS.

BAR SCHEDULE

MARK	NO. OF BARS	LENGTH	WEIGHT LBS.	TYPE
-	-	-		
S501	336	18'-1"	6332	STR.
S502	6	19'-4"	121	STR.
ES503 *	2280	9'-0"	21402	A
ES504 *	2160	5'-0 1/2"	11358	B
S505	2412	31'-0"	77987	STR.
S506	134	21'-10"	3051	STR.
ES507 *	37	6'-4"	244	C
S508	208	3'-9"	814	STR.
S509	208	2'-0"	434	STR.
S510	6	17'-6"	110	STR.
ES511 *	1764	31'-0"	57035	STR.
ES512 *	98	21'-0"	2146	STR.
ES513 *	208	3'-9"	814	STR.
ES514 *	208	2'-0"	434	STR.
ES515 *	6	19'-4"	121	STR.
ES516 *	12	17'-11"	224	STR.
ES517 *	30	5'-7"	175	C
S518	12	17'-11"	224	STR.
ES519 *	6	17'-6"	110	STR.
ES520 *	336	18'-1"	6336	STR.
S601	1909	26'-10"	76940	STR.
S602	1909	19'-4"	55435	STR.
ES603 *	1908	30'-0"	85974	STR.
ES701 *	3816	9'-4"	72799	STR.

NOTE 3

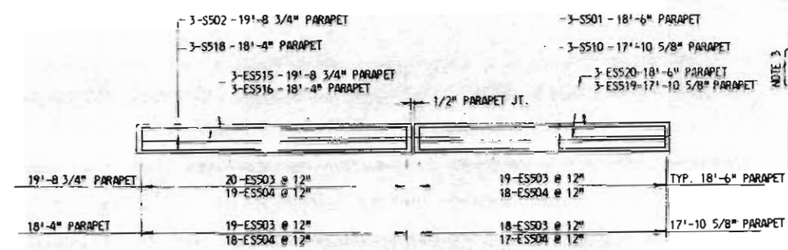

PARAPET PLAN
SCALE: NONE

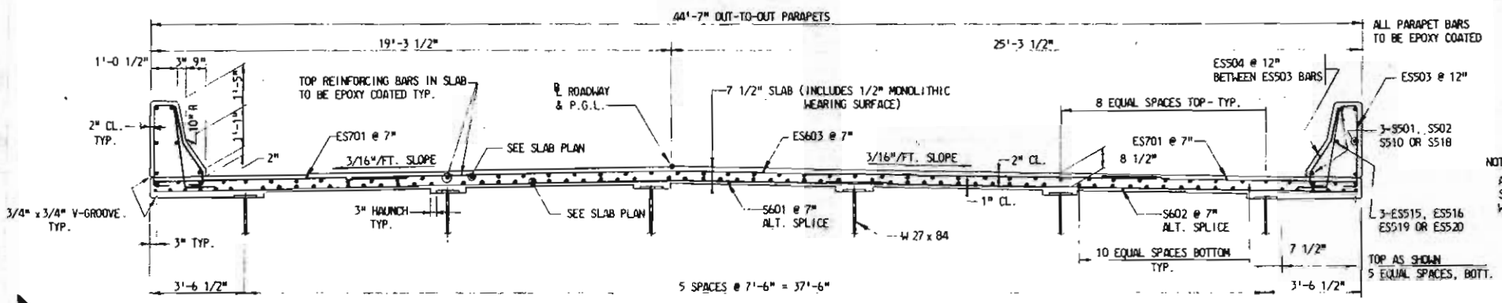

TYPICAL CROSS SECTION
SCALE: 3/8" = 1'-0"

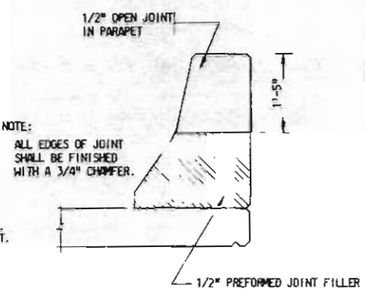

CURB AND PARAPET JOINT DETAIL
SCALE: 3/4" = 1'-0"

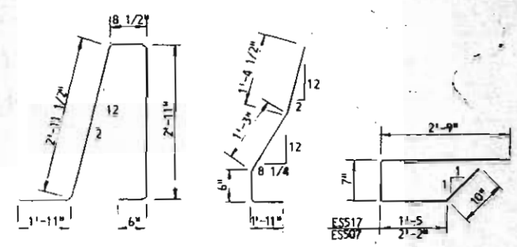

TYPE A TYPE B TYPE C

NOTES:

1. FOR GENERAL NOTES, SEE SHEET NOS. C4 & C5.
2. FOR EXPANSION DAM AND SLAB JOINT DETAILS, SEE SHEET NOS. C56 & C57.
3. SCUPPER REINFORCING BARS. FOR SCUPPER REINFORCEMENT DETAILS, SEE SHEET NO. C88.
4. WHERE REINFORCING BARS INTERFERE WITH THE PLACEMENT OF SCUPPERS, THE BARS SHALL BE CUT AS APPROVED BY THE ENGINEER.
5. FOR SCUPPER LOCATIONS SEE SHEET NOS. C80 & C58.

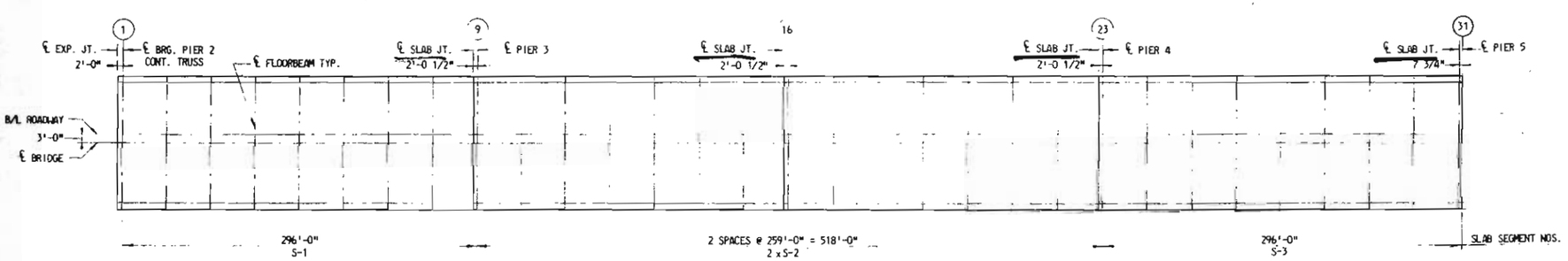

CONCRETE DECK PLAN
SCALE: NONE

NO.	SHEET	DESCRIPTION	DATE	BY

REVISIONS

WEST VIRGINIA DEPARTMENT OF HIGHWAYS
CHARLESTON, WEST VIRGINIA
INTERSTATE ROUTE NO. 77

I-77 OVER BLUESTONE RIVER
BRIDGE NO. 3010
CONCRETE DECK DETAILS
CONTINUOUS TRUSS SPANS

DESIGNED BY: H.L.T.
DRAWN BY: K.F.M.
CHECKED BY: M.K.Y.

GREINER ENGINEERING SCIENCES, INC.
CONSULTING ENGINEERS
BALTIMORE, MARYLAND
CHARLESTON, WEST VIRGINIA

DATE: NOV. 1975
SCALE: AS NOTED
SHEET C41

PUBLIC ROADS DIV.	STATE DIST. NO.	STATE PROJ. NO.	FEDERAL PROJ. NO.	FISCAL YEAR	COUNTY	SHEET NO.	TOTAL SHEETS
W. VA.	10	328-77-17.42	I-77 2(36)17		MERCER	C42	86

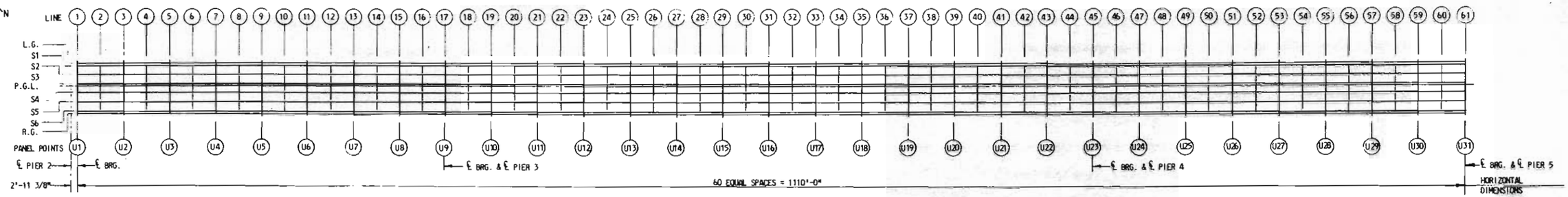

PLAN

TOP OF SLAB ELEVATIONS (IN FEET)

LINE	1	2	3	4	5	6	7	8	9	10	11	12	13	14	15	16	17	18	19	20	21	22	23	24	25	26	27	28	29	30	31
LT. GUTTER LINE	2096.10	2095.67	2095.24	2094.82	2094.39	2093.97	2093.54	2093.12	2092.69	2092.27	2091.84	2091.41	2090.99	2090.56	2090.14	2089.71	2089.29	2088.86	2088.44	2088.01	2087.59	2087.16	2086.73	2086.31	2085.88	2085.46	2085.03	2084.61	2084.18	2083.76	2083.33
STRINGER 1	2096.12	2095.69	2095.27	2094.84	2094.42	2093.99	2093.57	2093.14	2092.71	2092.29	2091.86	2091.44	2091.01	2090.59	2090.16	2089.74	2089.31	2088.89	2088.46	2088.03	2087.61	2087.18	2086.76	2086.33	2085.91	2085.48	2085.06	2084.63	2084.20	2083.78	2083.35
STRINGER 2	2096.24	2095.81	2095.38	2094.96	2094.53	2094.11	2093.68	2093.26	2092.83	2092.41	2091.98	2091.56	2091.13	2090.70	2090.28	2089.85	2089.43	2089.00	2088.58	2088.15	2087.73	2087.30	2086.87	2086.45	2086.02	2085.60	2085.17	2084.75	2084.32	2083.90	2083.47
STRINGER 3	2096.35	2095.93	2095.50	2095.08	2094.65	2094.23	2093.80	2093.37	2092.95	2092.52	2092.10	2091.67	2091.25	2090.82	2090.40	2089.97	2089.54	2089.12	2088.69	2088.27	2087.84	2087.42	2086.99	2086.57	2086.14	2085.72	2085.29	2084.86	2084.44	2084.01	2083.59
P.G.L.	2096.36	2095.94	2095.51	2095.09	2094.66	2094.24	2093.81	2093.39	2092.96	2092.54	2092.11	2091.68	2091.26	2090.83	2090.41	2089.98	2089.56	2089.13	2088.71	2088.28	2087.85	2087.43	2087.00	2086.58	2086.15	2085.73	2085.30	2084.88	2084.45	2084.03	2083.60
STRINGER 4	2096.26	2095.83	2095.41	2094.98	2094.56	2094.13	2093.71	2093.28	2092.86	2092.43	2092.00	2091.58	2091.15	2090.73	2090.30	2089.88	2089.45	2089.03	2088.60	2088.17	2087.75	2087.32	2086.90	2086.47	2086.05	2085.62	2085.20	2084.77	2084.35	2083.92	2083.49
STRINGER 5	2096.14	2095.72	2095.29	2094.87	2094.44	2094.01	2093.59	2093.16	2092.74	2092.31	2091.89	2091.46	2091.04	2090.61	2090.19	2089.76	2089.33	2088.91	2088.48	2088.06	2087.63	2087.21	2086.78	2086.36	2085.93	2085.50	2085.08	2084.65	2084.23	2083.80	2083.38
STRINGER 6	2096.03	2095.60	2095.17	2094.75	2094.32	2093.90	2093.47	2093.05	2092.62	2092.20	2091.77	2091.34	2090.92	2090.49	2090.07	2089.64	2089.22	2088.79	2088.37	2087.94	2087.52	2087.09	2086.66	2086.24	2085.81	2085.39	2084.96	2084.54	2084.11	2083.69	2083.26
RT. GUTTER LINE	2096.00	2095.58	2095.15	2094.73	2094.30	2093.87	2093.45	2093.02	2092.60	2092.17	2091.75	2091.32	2090.90	2090.47	2090.04	2089.62	2089.19	2088.77	2088.34	2087.92	2087.49	2087.07	2086.64	2086.22	2085.79	2085.36	2084.94	2084.51	2084.09	2083.66	2083.24

LINE	32	33	34	35	36	37	38	39	40	41	42	43	44	45	46	47	48	49	50	51	52	53	54	55	56	57	58	59	60	61
LT. GUTTER LINE	2082.90	2082.48	2082.05	2081.63	2081.20	2080.78	2080.35	2079.93	2079.50	2079.08	2078.65	2078.22	2077.80	2077.37	2076.95	2076.52	2076.10	2075.67	2075.25	2074.82	2074.39	2073.97	2073.54	2073.12	2072.69	2072.27	2071.84	2071.42	2070.99	2070.57
STRINGER 1	2082.93	2082.50	2082.08	2081.65	2081.23	2080.80	2080.38	2079.95	2079.52	2079.10	2078.67	2078.25	2077.82	2077.40	2076.97	2076.55	2076.12	2075.69	2075.27	2074.84	2074.42	2073.99	2073.57	2073.14	2072.72	2072.29	2071.87	2071.44	2071.01	2070.59
STRINGER 2	2083.05	2082.62	2082.19	2081.77	2081.34	2080.92	2080.49	2080.07	2079.64	2079.22	2078.79	2078.36	2077.94	2077.51	2077.09	2076.66	2076.24	2075.81	2075.39	2074.96	2074.54	2074.11	2073.68	2073.26	2072.83	2072.41	2071.98	2071.56	2071.13	2070.71
STRINGER 3	2083.16	2082.74	2082.31	2081.89	2081.46	2081.03	2080.61	2080.18	2079.76	2079.33	2078.91	2078.48	2078.06	2077.63	2077.21	2076.78	2076.35	2075.93	2075.50	2075.08	2074.65	2074.23	2073.80	2073.38	2072.95	2072.52	2072.10	2071.67	2071.25	2070.82
P.G.L.	2083.17	2082.75	2082.32	2081.90	2081.47	2081.05	2080.62	2080.20	2079.77	2079.34	2078.92	2078.49	2078.07	2077.64	2077.22	2076.79	2076.37	2075.94	2075.52	2075.09	2074.66	2074.24	2073.81	2073.39	2072.96	2072.54	2072.11	2071.69	2071.26	2070.83
STRINGER 4	2083.07	2082.64	2082.22	2081.79	2081.37	2080.94	2080.52	2080.09	2079.66	2079.24	2078.81	2078.39	2077.96	2077.54	2077.11	2076.69	2076.26	2075.84	2075.41	2074.98	2074.56	2074.13	2073.71	2073.28	2072.86	2072.43	2072.01	2071.58	2071.15	2070.73
STRINGER 5	2082.95	2082.53	2082.10	2081.68	2081.25	2080.82	2080.40	2079.97	2079.55	2079.12	2078.70	2078.27	2077.85	2077.42	2076.99	2076.57	2076.14	2075.72	2075.29	2074.87	2074.44	2074.02	2073.59	2073.17	2072.74	2072.31	2071.89	2071.46	2071.04	2070.61
STRINGER 6	2082.83	2082.41	2081.98	2081.56	2081.13	2080.71	2080.28	2079.86	2079.43	2079.01	2078.58	2078.15	2077.73	2077.30	2076.88	2076.45	2076.03	2075.60	2075.18	2074.75	2074.32	2073.90	2073.47	2073.05	2072.62	2072.20	2071.77	2071.35	2070.92	2070.50
RT. GUTTER LINE	2082.81	2082.39	2081.96	2081.53	2081.11	2080.68	2080.26	2079.83	2079.41	2078.98	2078.56	2078.13	2077.71	2077.28	2076.85	2076.43	2076.00	2075.58	2075.15	2074.73	2074.30	2073.88	2073.45	2073.02	2072.60	2072.17	2071.75	2071.32	2070.90	2070.47

Note: The Grade was raised from Pier 3 To Pier 4 To obtain the Min. Thickness: The Maximum Difference in elevation is 1/4" in 37' The Total Rise is 7/8" This was Approved Via Telephone by design on 9-1-78 PW

NOTES:

1. FOR GENERAL NOTES, SEE SHEET NOS. C4 & C5.

NO.	SHEET	DESCRIPTION	DATE	BY

REVISIONS

WEST VIRGINIA DEPARTMENT OF HIGHWAYS
CHARLESTON, WEST VIRGINIA
INTERSTATE ROUTE NO. 77

I-77 OVER BLUESTONE RIVER
BRIDGE NO. 3010
DECK ELEVATIONS
CONTINUOUS TRUSS SPANS

DESIGNED BY: W.M.D.
DRAWN BY: K.F.M.
CHECKED BY: R.H.W.

GREINER ENGINEERING SCIENCES, INC.
CONSULTING ENGINEERS
BALTIMORE, MARYLAND
CHARLESTON, WEST VIRGINIA

DATE: NOV. 1975
SCALE: NONE
SHEET C42

PUBLIC ROADS DIV.	STATE DIST. NO.	STATE PROJ. NO.	FEDERAL PROJ. NO.	FISCAL YEAR	COUNTY	SHEET NO.	TOTAL SHEETS
W. VA.	10	328-77-17.42	I-77 2C917		MERCER	C43	86

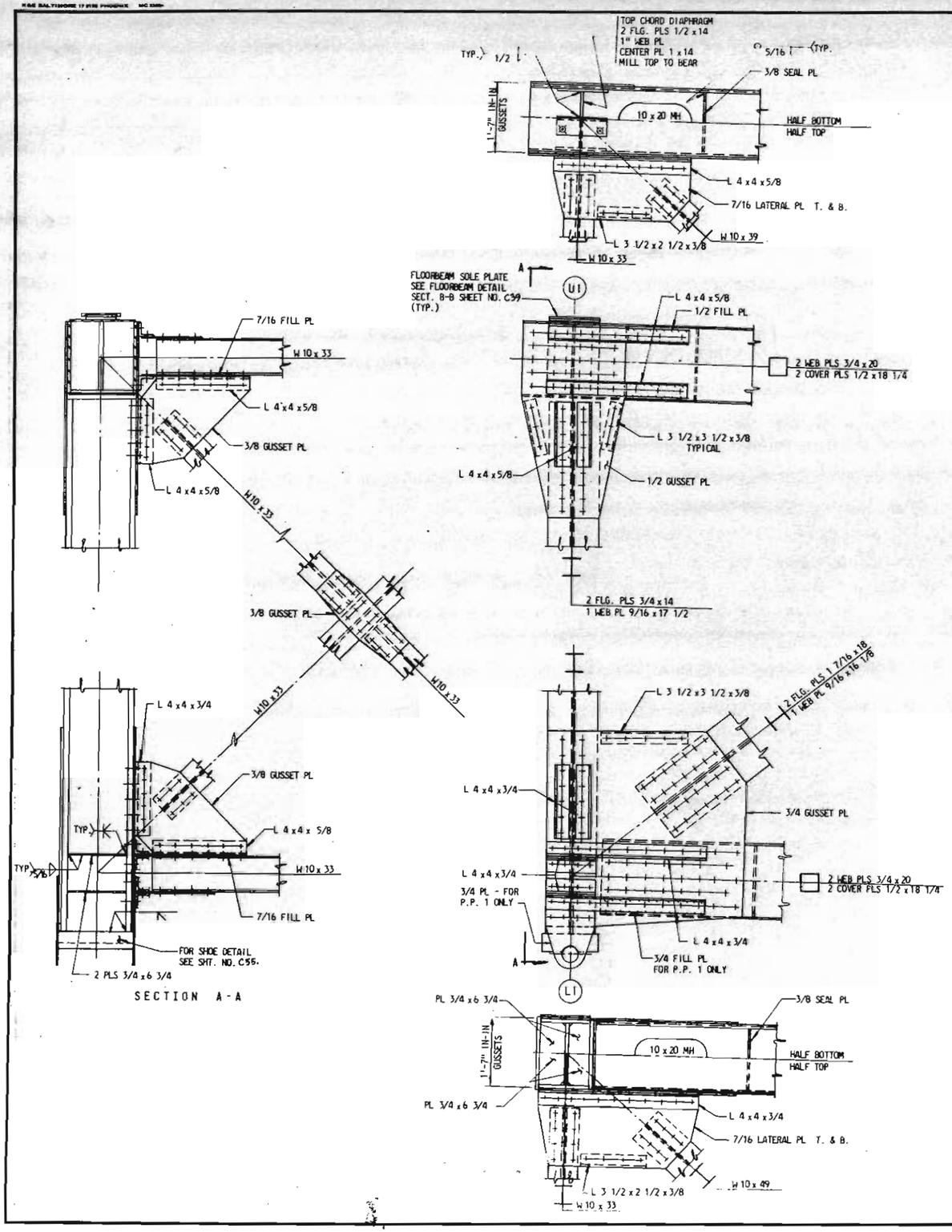

NOTES:

1. FOR GENERAL NOTES, SEE SHEET NOS. C4 & C5.

NO.	SHEET	DESCRIPTION	DATE	BY

REVISIONS

WEST VIRGINIA DEPARTMENT OF HIGHWAYS
CHARLESTON, WEST VIRGINIA
INTERSTATE ROUTE NO. 77

I-77 OVER BLUESTONE RIVER
BRIDGE NO. 3010
CONTINUOUS TRUSS SPANS - JOINT DETAILS I

DESIGNED BY: R.C.S.
DRAWN BY: A.J.S.
CHECKED BY: J.W.A.

GREINER ENGINEERING SCIENCES, INC.
CONSULTING ENGINEERS
BALTIMORE, MARYLAND
CHARLESTON, WEST VIRGINIA

DATE: NOV. 1975
SCALE: 3/4" = 1'-0"
SHEET C43

PUBLIC ROADS DIV.	STATE DIST. NO.	STATE PROJ. NO.	FEDERAL PROJ. NO.	FISCAL YEAR	COUNTY	SHEET NO.	TOTAL SHEETS
W. VA.	10	328-77-17.42	I-77 206317		MERCER	C44	86

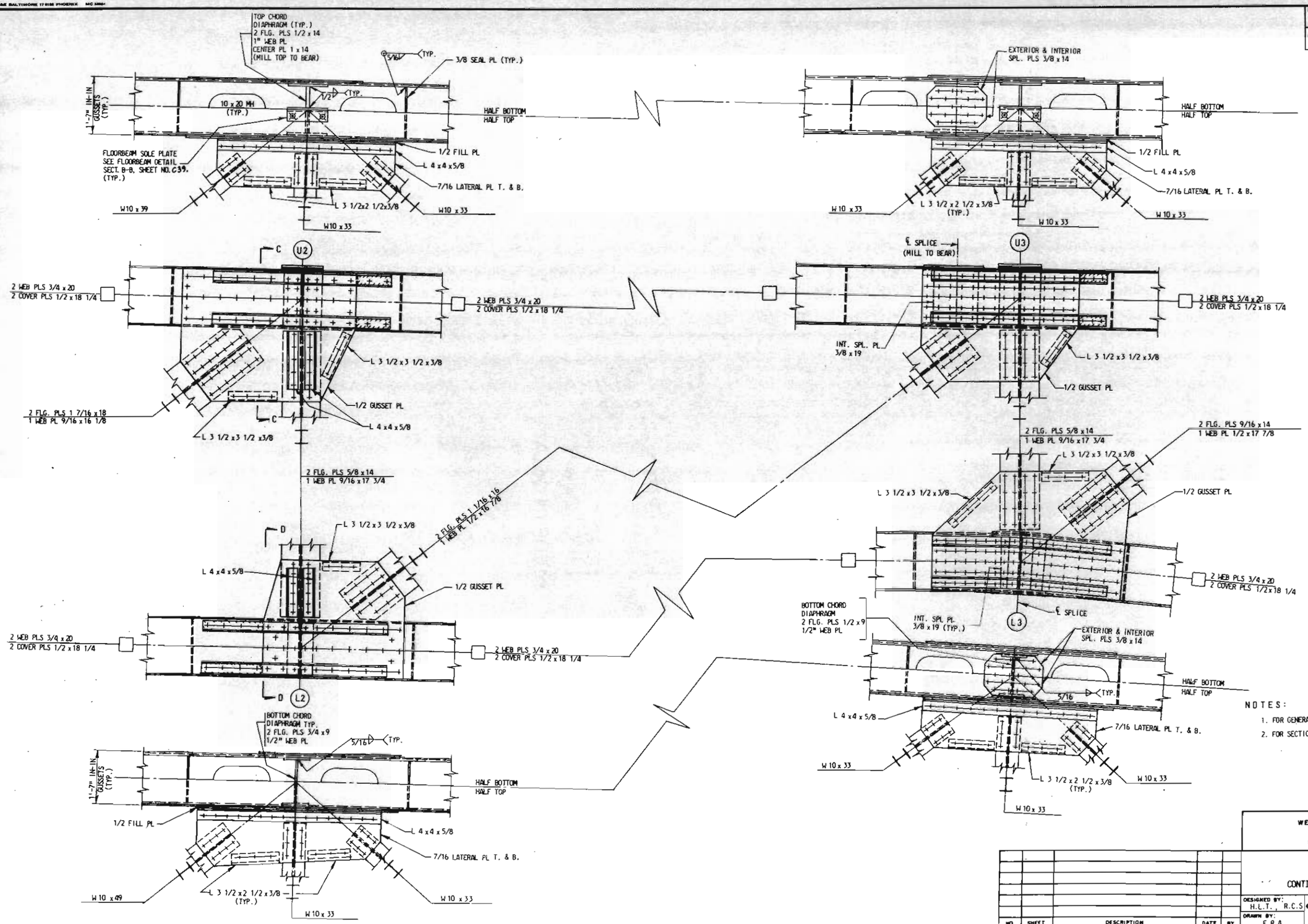

NOTES:

1. FOR GENERAL NOTES, SEE SHEET NOS. C4 & C5.
2. FOR SECTIONS C-C AND D-D, SEE SHEET NO. C52.

NO.	SHEET	DESCRIPTION	DATE	BY

REVISIONS

WEST VIRGINIA DEPARTMENT OF HIGHWAYS
CHARLESTON, WEST VIRGINIA
INTERSTATE ROUTE NO. 77

I-77 OVER BLUESTONE RIVER
BRIDGE NO. 3010
CONTINUOUS TRUSS SPANS - JOINT DETAIL II

DESIGNED BY: H.L.T., R.C.S
DRAWN BY: E.R.A.
CHECKED BY: J.W.A.

GREINER ENGINEERING SCIENCES, INC.
CONSULTING ENGINEERS
BALTIMORE, MARYLAND
CHARLESTON, WEST VIRGINIA

DATE: NOV. 1975
SCALE: 3/4" = 1'-0"
SHEET C44

PUBLIC ROADS DIV.	STATE DIST. NO.	STATE PROJ. NO.	FEDERAL PROJ. NO.	FISCAL YEAR	COUNTY	SHEET NO.	TOTAL SHEETS
W. VA.	10	328-77-17.42	I-77 206(17)		MERCER	C45	86

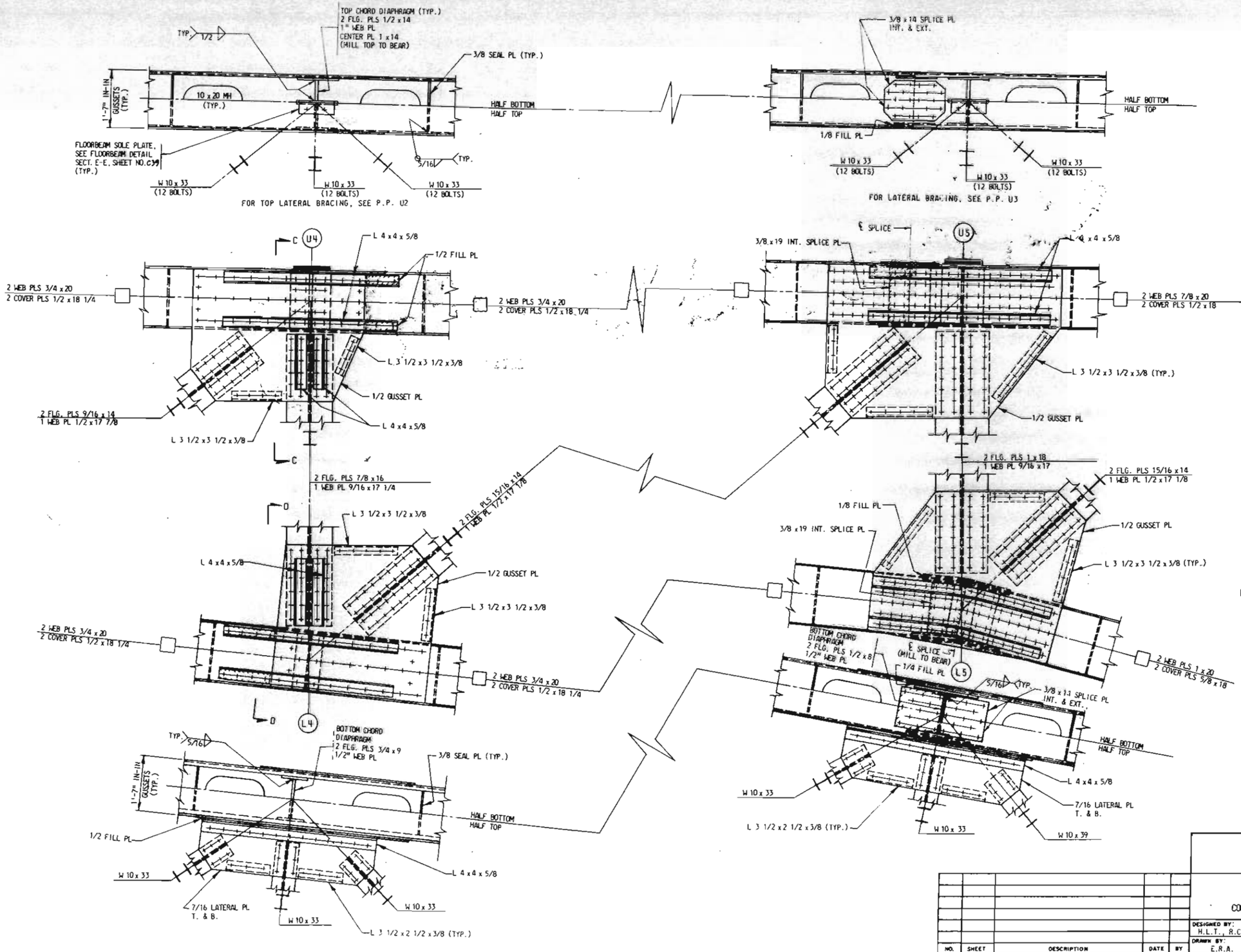

NOTES:

1. FOR GENERAL NOTES, SEE SHEET NOS. C4 & C5.
2. FOR SECTIONS C-C & D-D, SEE SHEET NO. C52.

NO.	SHEET	DESCRIPTION	DATE	BY

REVISIONS

WEST VIRGINIA DEPARTMENT OF HIGHWAYS
CHARLESTON, WEST VIRGINIA
INTERSTATE ROUTE NO. 77

I-77 OVER BLUESTONE RIVER
BRIDGE NO. 3010
CONTINUOUS TRUSS SPANS - JOINT DETAILS III

DESIGNED BY: H.L.T., R.C.S.
DRAWN BY: E.R.A.
CHECKED BY: J.W.A.

GREINER ENGINEERING SCIENCES, INC.
CONSULTING ENGINEERS
BALTIMORE, MARYLAND
CHARLESTON, WEST VIRGINIA

DATE: NOV. 1975
SCALE: 3/4" = 1'-0"
SHEET C45

PUBLIC ROADS DIV.	STATE DIST. NO.	STATE PROJ. NO.	FEDERAL PROJ. NO.	FISCAL YEAR	COUNTY	SHEET NO.	TOTAL SHEETS
W. VA.	10	328-77-17.42	I-77 206(17)		MERCER	C46	86

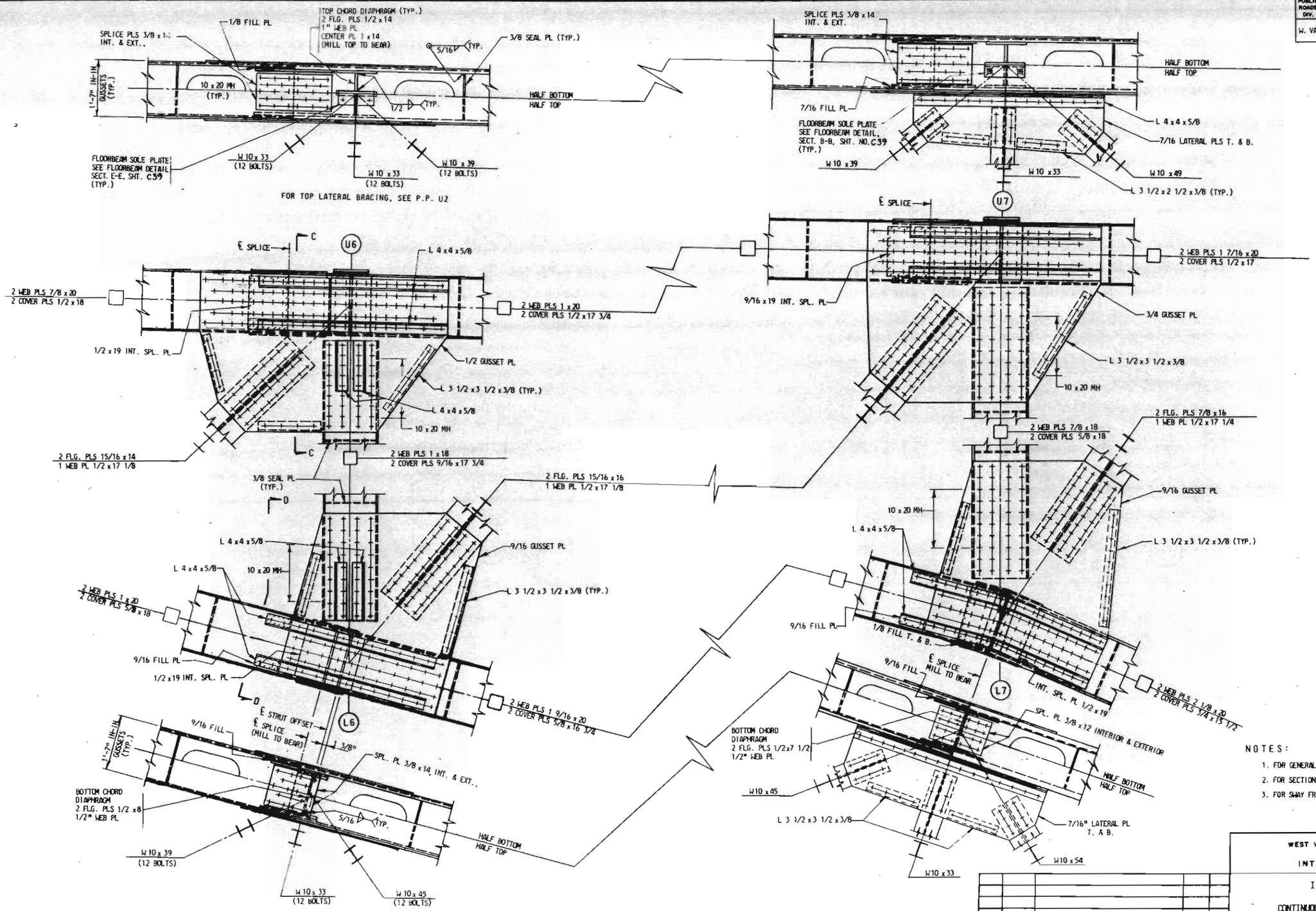

NOTES:

1. FOR GENERAL NOTES, SEE SHEET NOS. C4 & C5.
2. FOR SECTIONS C-C AND D-D, SEE SHEET NO. C52.
3. FOR SWAY FRAME DETAILS AT P.P. 6 SEE SHEET NO. C53.

NO.	SHEET	DESCRIPTION	DATE	BY

REVISIONS

WEST VIRGINIA DEPARTMENT OF HIGHWAYS
CHARLESTON, WEST VIRGINIA
INTERSTATE ROUTE NO. 77

I-77 OVER BLUESTONE RIVER
BRIDGE NO. 3010
CONTINUOUS TRUSS SPANS - JOINT DETAILS IV

DESIGNED BY: R.C.S, H.L.T., C.M.O.
DRAWN BY: E.R.A.
CHECKED BY: J.W.A.

GREINER ENGINEERING SCIENCES, INC.
CONSULTING ENGINEERS
BALTIMORE, MARYLAND
CHARLESTON, WEST VIRGINIA

DATE: NOV. 1975
SCALE: 3/4" = 1'-0"
SHEET C46

PUBLIC ROADS DIV.	STATE DIST. NO.	STATE PROJ. NO.	FEDERAL PROJ. NO.	FISCAL YEAR	COUNTY	SHEET NO.	TOTAL SHEETS
W. VA.	10	328-77-17.42	I-77 203917		MERCER	C47	86

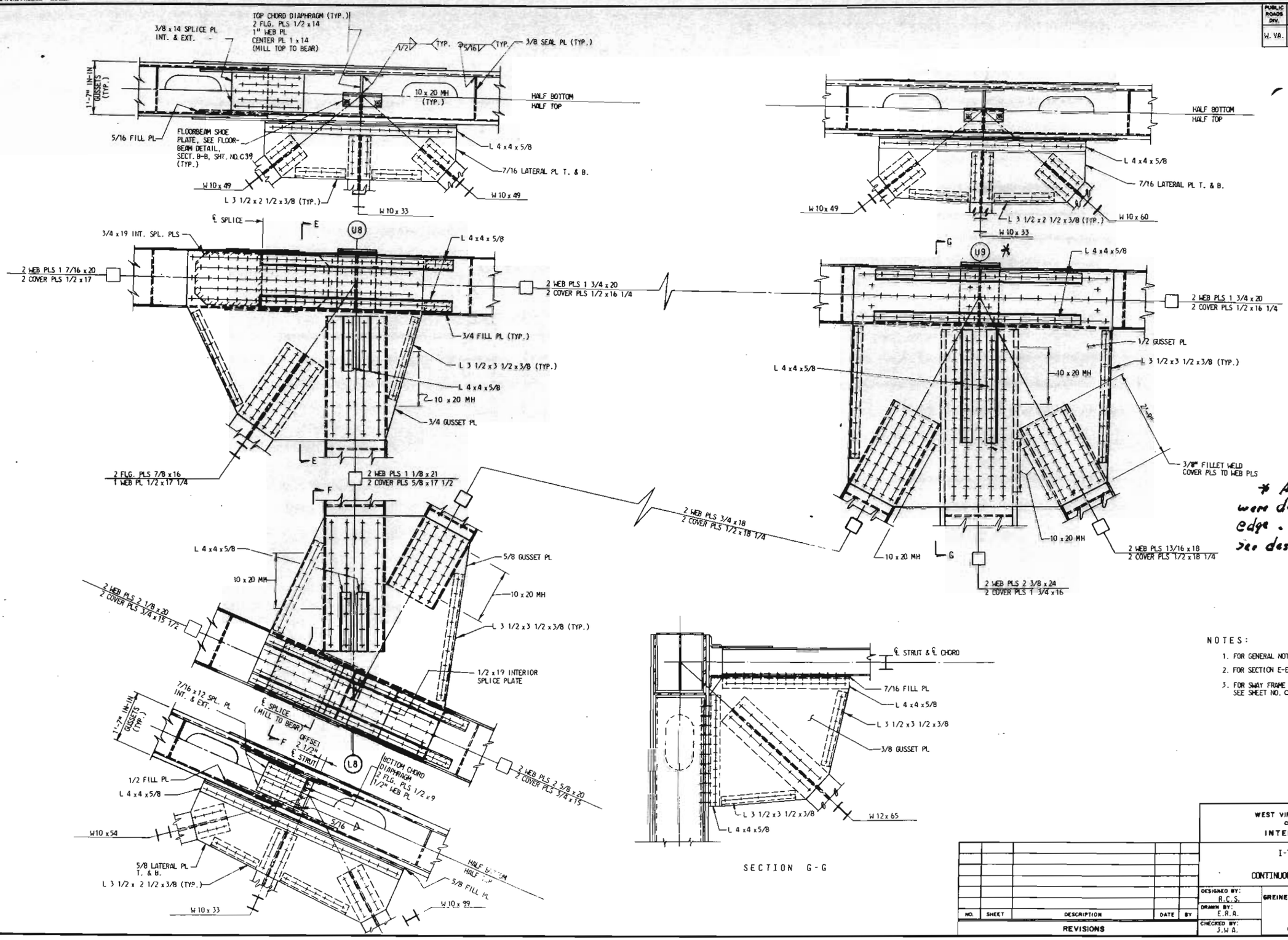

* At. Joint U9, Two holes were drilled To Close To the edge. for Approved Change See design letter 12-8-77

NOTES:

1. FOR GENERAL NOTES, SEE SHEET NOS. C4 & C5.
2. FOR SECTION E-E AND F-F, SEE SHEET NO. C52.
3. FOR SWAY FRAME DETAILS AT P.PS. 8 & 9, SEE SHEET NO. C53.

NO.	SHEET	DESCRIPTION	DATE	BY

REVISIONS

WEST VIRGINIA DEPARTMENT OF HIGHWAYS
CHARLESTON, WEST VIRGINIA
INTERSTATE ROUTE NO. 77

I-77 OVER BLUESTONE RIVER
BRIDGE NO. 3010
CONTINUOUS TRUSS SPANS - JOINT DETAILS V

DESIGNED BY: R.C.S.
DRAWN BY: E.R.A.
CHECKED BY: J.W.A.

GREINER ENGINEERING SCIENCES, INC.
CONSULTING ENGINEERS
BALTIMORE, MARYLAND
CHARLESTON, WEST VIRGINIA

DATE: NOV. 1975
SCALE: 3/4" = 1'-0"
SHEET C47

PUBLIC ROADS DIV.	STATE DIST. NO.	STATE PROJ. NO.	FEDERAL PROJ. NO.	FISCAL YEAR	COUNTY	SHEET NO.	TOTAL SHEETS
W. VA.	10	328-77-17.42	I-77 20917		MERCER	C48	86

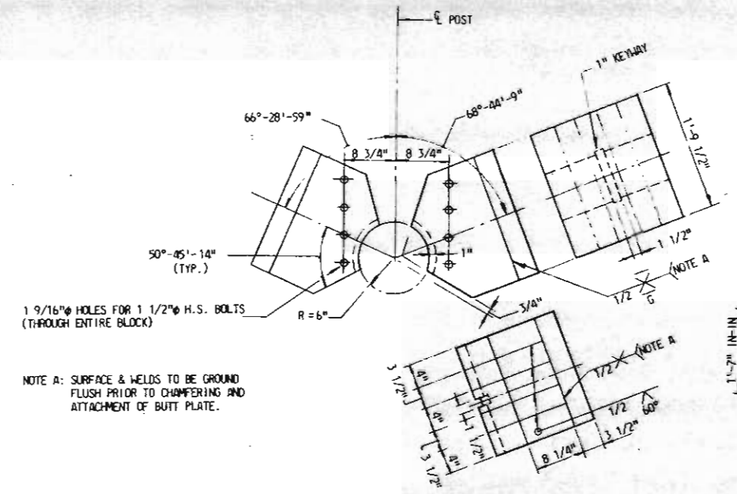

NOTE A: SURFACE & WELDS TO BE GROUND FLUSH PRIOR TO CHAMFERING AND ATTACHMENT OF BUTT PLATE.

BEARING BLOCKS
SCALE: 1" = 1'-0"

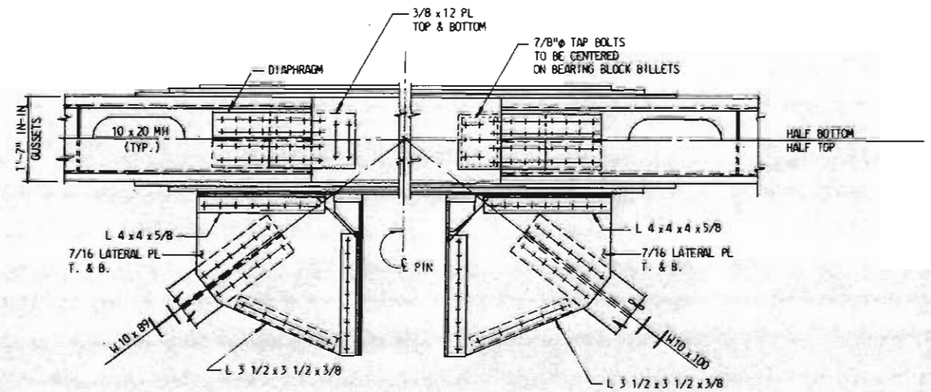

DEVELOPED SECTION A-A

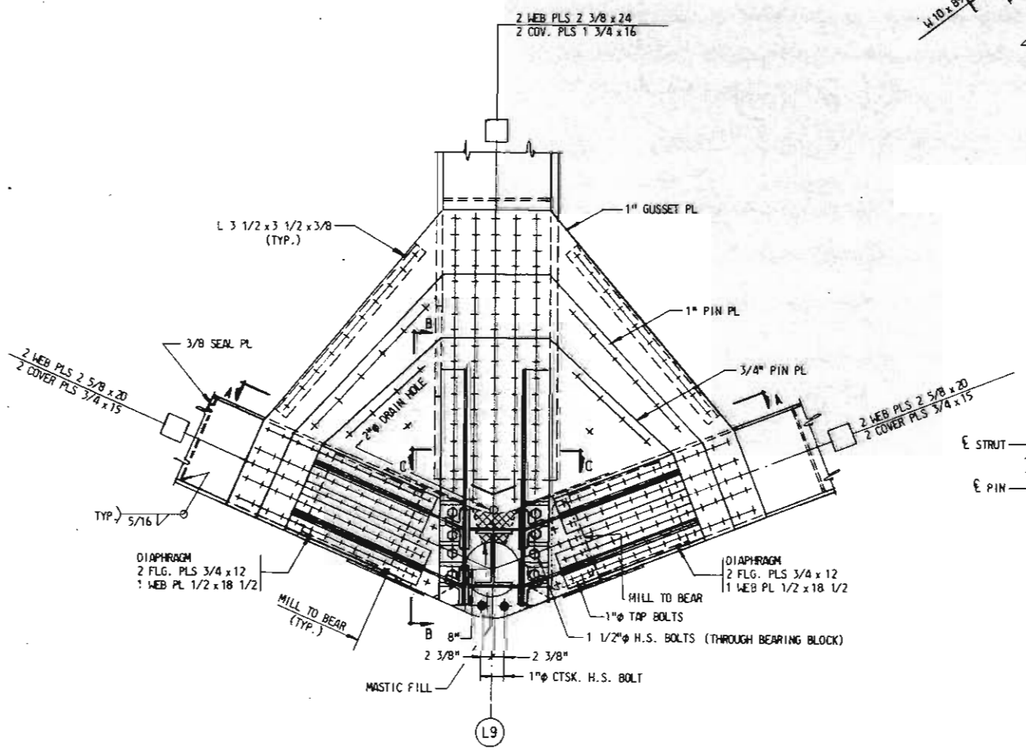

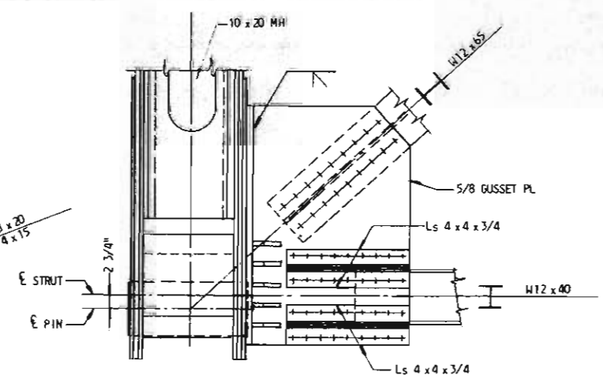

SECTION B-B

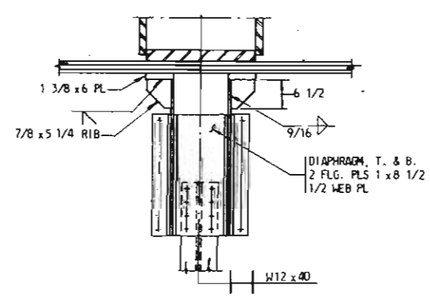

SECTION C-C

Note: There is a change @ Panel Point L9 (see letter in files) PW

NOTES:

1. FOR GENERAL NOTES, SEE SHEET NOS. C4 & C5.
2. FOR PIN AND SHOE DETAILS, SEE SHEET NO. C54.
3. ALL SPECIAL BOLTS SHOWN SHALL CONFORM TO ASTM A-325 TYPE 3 SPECIFICATIONS.

NO.	SHEET	DESCRIPTION	DATE	BY

REVISIONS

WEST VIRGINIA DEPARTMENT OF HIGHWAYS
CHARLESTON, WEST VIRGINIA
INTERSTATE ROUTE NO. 77

I-77 OVER BLUESTONE RIVER
BRIDGE NO. 3010
CONTINUOUS TRUSS SPANS - JOINT DETAILS VI

DESIGNED BY: F.R.P.
DRAWN BY: A.J.S.
CHECKED BY: J.W.A.

GREINER ENGINEERING SCIENCES, INC.
CONSULTING ENGINEERS
BALTIMORE, MARYLAND
CHARLESTON, WEST VIRGINIA

DATE: NOV. 1975
SCALE: 3/4" = 1'-0" OR AS SHOWN
SHEET C48

PUBLIC ROADS DIV.	STATE DIST. NO.	STATE PROJ. NO.	FEDERAL PROJ. NO.	FISCAL YEAR	COUNTY	SHEET NO.	TOTAL SHEETS
W. VA.	10	328-77-17.42	I-77 2C0917		MERCER	C49	86

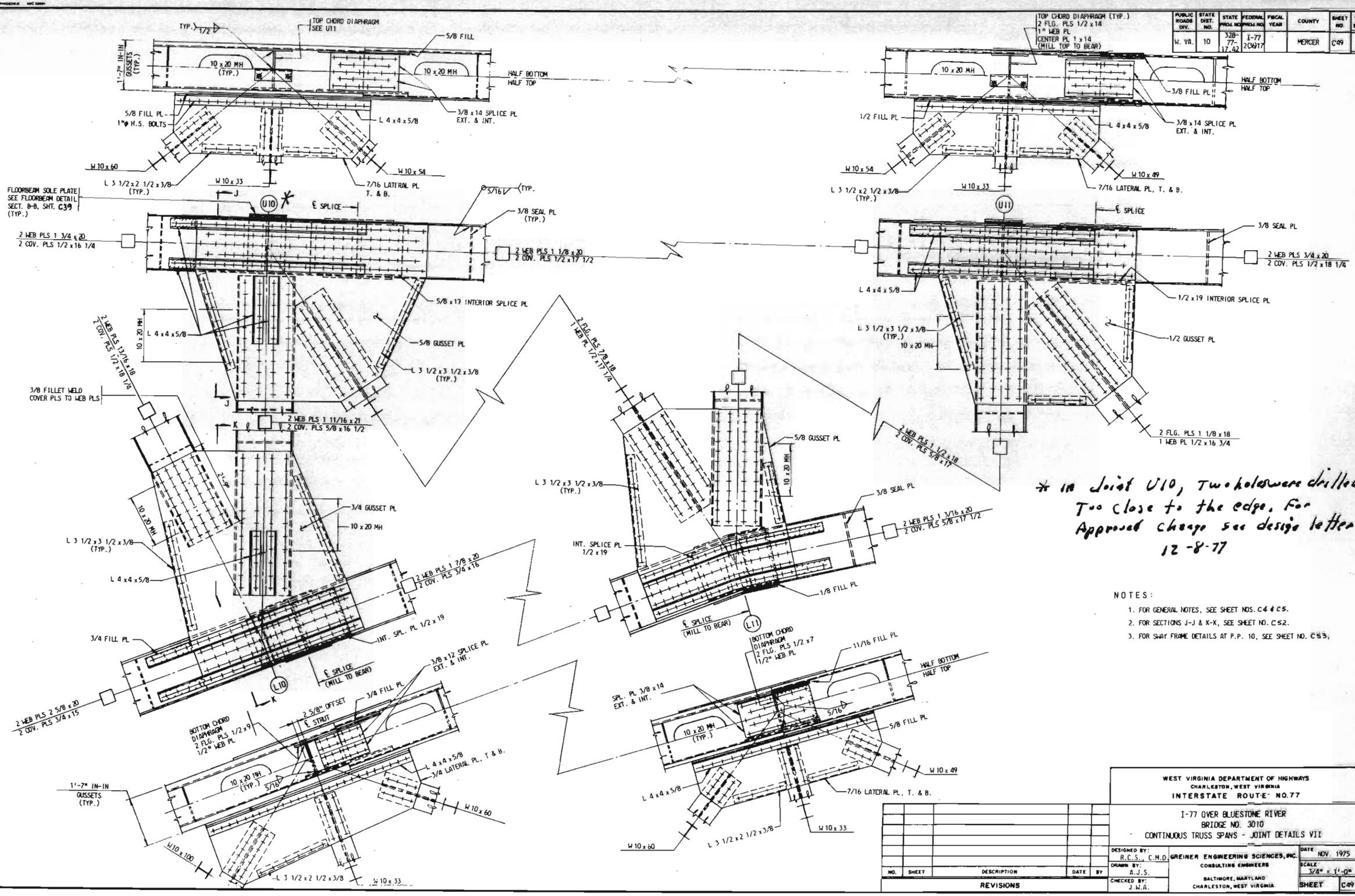

* in Joint U10, Two holes were drilled Too close to the edge. For Approved change see design letter 12-8-77

NOTES:

1. FOR GENERAL NOTES, SEE SHEET NOS. C4 & C5.
2. FOR SECTIONS J-J & K-K, SEE SHEET NO. C52.
3. FOR SWAY FRAME DETAILS AT P.P. 10, SEE SHEET NO. C53.

NO.	SHEET	DESCRIPTION	DATE	BY

REVISIONS

WEST VIRGINIA DEPARTMENT OF HIGHWAYS
CHARLESTON, WEST VIRGINIA
INTERSTATE ROUTE NO. 77

I-77 OVER BLUESTONE RIVER
BRIDGE NO. 3010
CONTINUOUS TRUSS SPANS - JOINT DETAILS VII

DESIGNED BY: R.C.S., C.M.D.
DRAWN BY: A.J.S.
CHECKED BY: J.W.A.

GREINER ENGINEERING SCIENCES, INC.
CONSULTING ENGINEERS
BALTIMORE, MARYLAND
CHARLESTON, WEST VIRGINIA

DATE: NOV. 1975
SCALE: 3/4" = 1'-0"
SHEET C49

PUBLIC ROADS DIV.	STATE DIST. NO.	STATE PROJ. NO.	FEDERAL PROJ. NO.	FISCAL YEAR	COUNTY	SHEET NO.	TOTAL SHEETS
W. VA.	10	328-77-17.42	I-77 206(17)		MERCER	C50	86

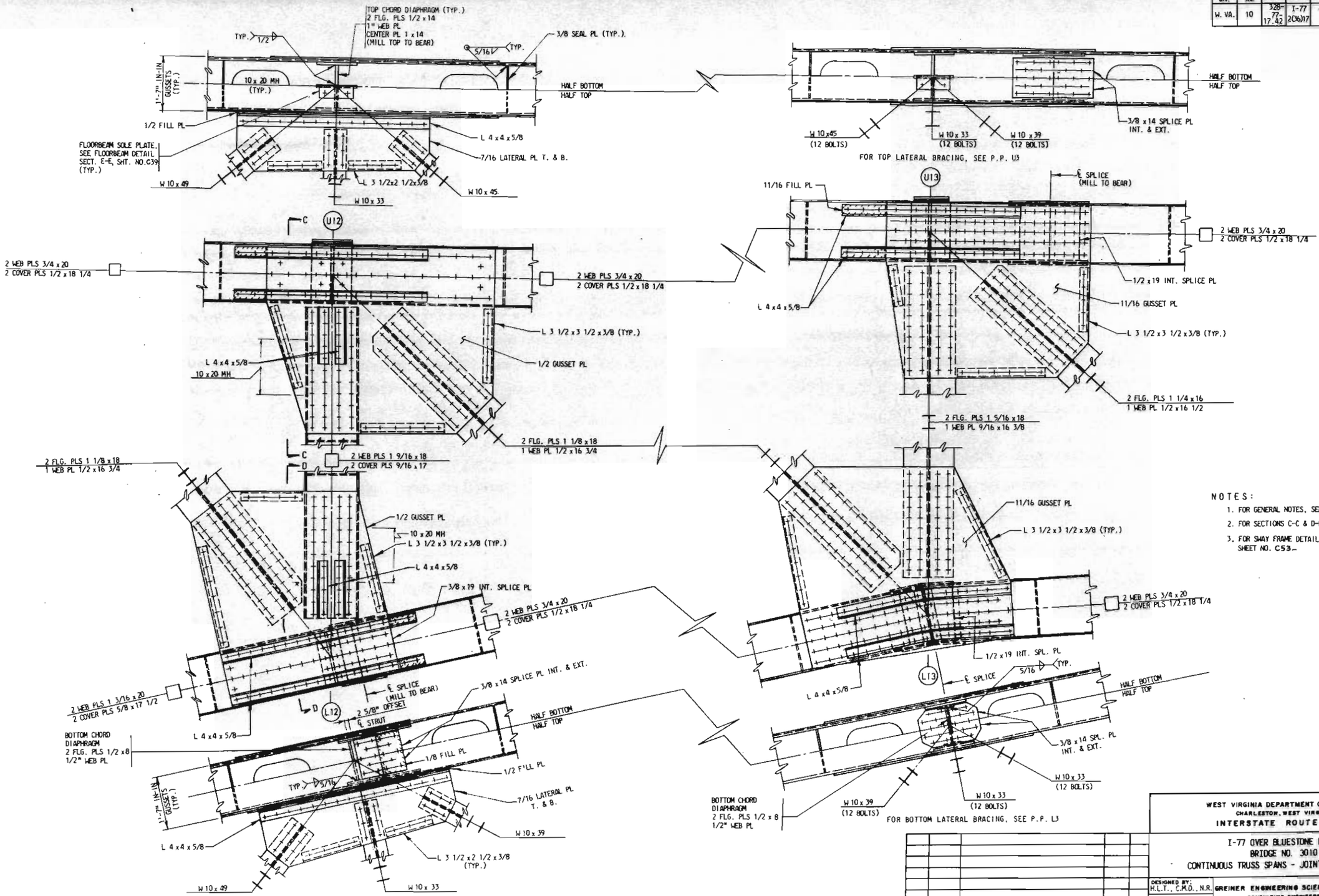

NOTES:

1. FOR GENERAL NOTES, SEE SHEET NOS. C4 & C5.
2. FOR SECTIONS C-C & D-D, SEE SHEET NO. C52.
3. FOR SWAY FRAME DETAILS AT P.P. 12, SEE SHEET NO. C53.

NO.	SHEET	DESCRIPTION	DATE	BY

REVISIONS

WEST VIRGINIA DEPARTMENT OF HIGHWAYS
CHARLESTON, WEST VIRGINIA
INTERSTATE ROUTE NO.77

I-77 OVER BLUESTONE RIVER
BRIDGE NO. 3010
CONTINUOUS TRUSS SPANS - JOINT DETAILS VIII

DESIGNED BY: H.L.T., C.M.D., N.R.
DRAWN BY: E.R.A.
CHECKED BY: J.W.A.

GREINER ENGINEERING SCIENCES, INC.
CONSULTING ENGINEERS
BALTIMORE, MARYLAND
CHARLESTON, WEST VIRGINIA

DATE: NOV. 1975
SCALE: 3/4" = 1'-0"
SHEET C50

PUBLIC ROADS DIV.	STATE DIST. NO.	STATE PROJ. NO.	FEDERAL PROJ. NO.	FISCAL YEAR	COUNTY	SHEET NO.	TOTAL SHEETS
W. VA.	10	328-77-17.42	I-77 2069 17		MERCER	C51	86

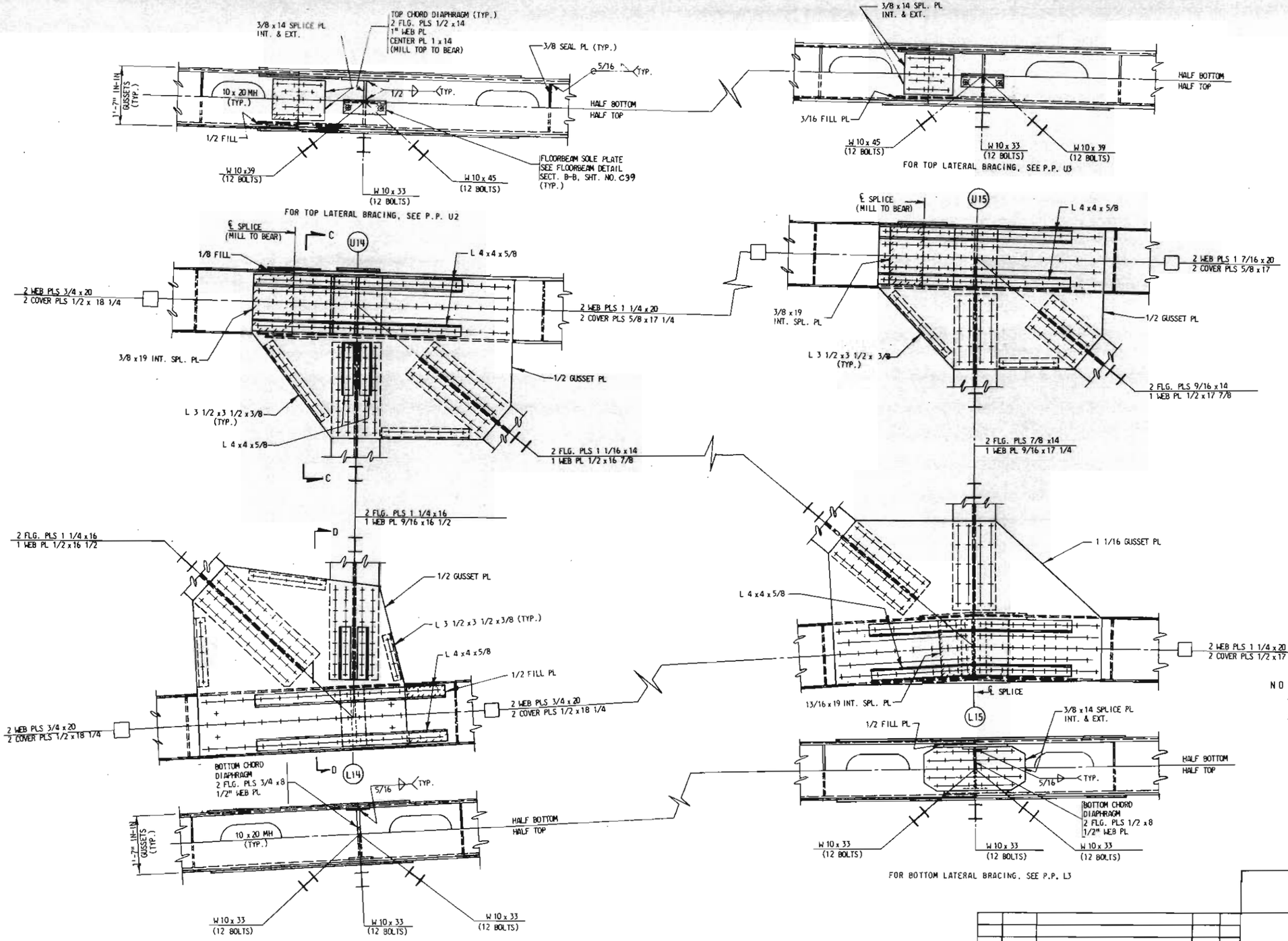

NOTES:

1. FOR GENERAL NOTES, SEE SHEET NOS. C4 & C5.
2. FOR SECTIONS C-C & D-D, SEE SHEET NO. C52.

NO.	SHEET	DESCRIPTION	DATE	BY

REVISIONS

WEST VIRGINIA DEPARTMENT OF HIGHWAYS
CHARLESTON, WEST VIRGINIA
INTERSTATE ROUTE NO. 77

I-77 OVER BLUESTONE RIVER
BRIDGE NO. 3010
CONTINUOUS TRUSS SPANS - JOINT DETAILS IX

DESIGNED BY: C.M.D.
DRAWN BY: E.R.A.
CHECKED BY: J.H.A.

GREINER ENGINEERING SCIENCES, INC.
CONSULTING ENGINEERS
BALTIMORE, MARYLAND
CHARLESTON, WEST VIRGINIA

DATE: NOV. 1975
SCALE: 3/4" = 1'-0"
SHEET C51

PUBLIC ROADS DIV.	STATE DIST. NO.	STATE PROJ. NO.	FEDERAL PROJ. NO.	FISCAL YEAR	COUNTY	SHEET NO.	TOTAL SHEETS
W. VA.	10	328-77-17.42	I-77 206(17)		MERCER	C 52	86

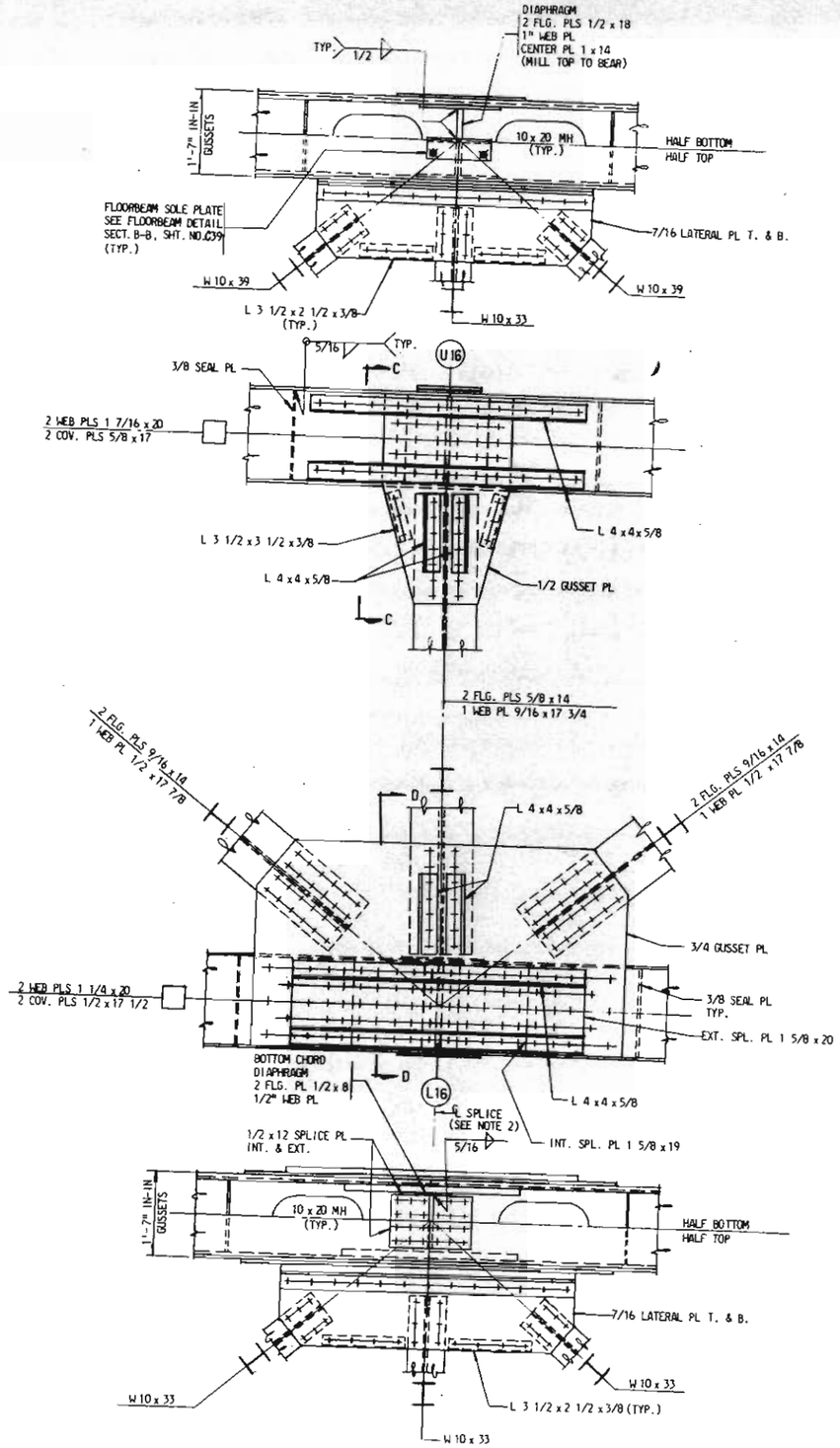

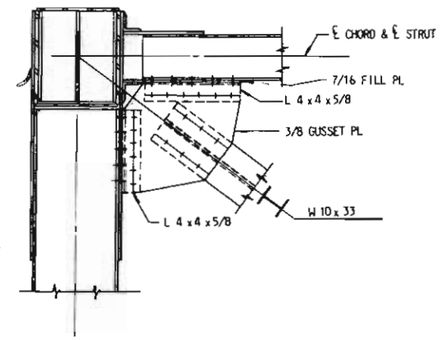

SECTION C-C
(P.P. U2, U4, U6, U12, U14, U16)

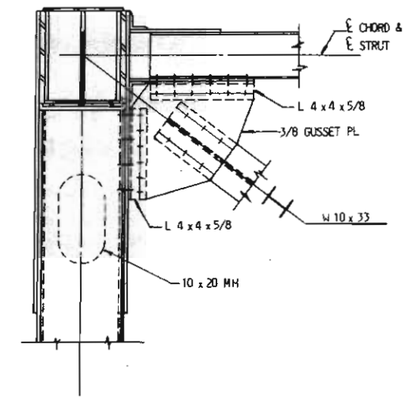

SECTION E-E
(P.P. U8)

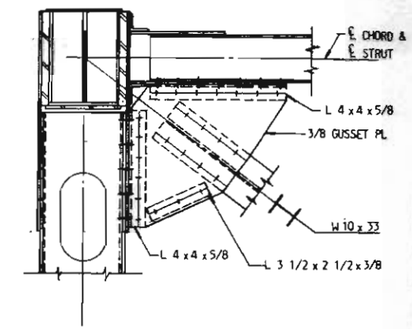

SECTION J-J
(P.P. U10)

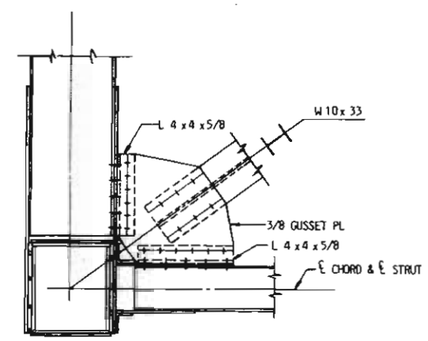

SECTION D-D
(P.P. L2, L4, L6, L12, L14, L16)

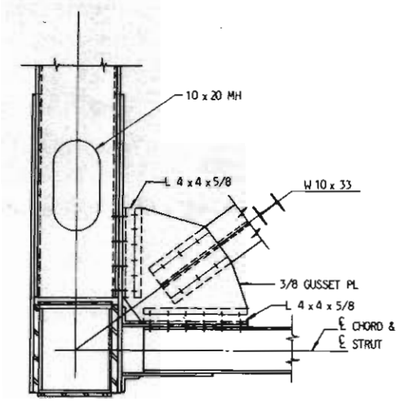

SECTION F-F
(P.P. L8)

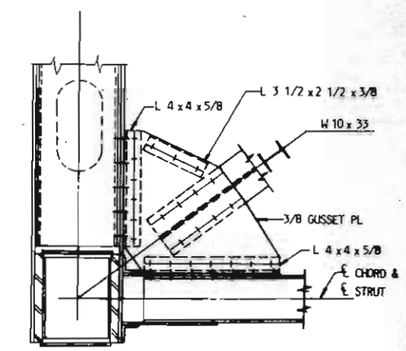

SECTION K-K
(P.P. L10)

NOTES:

1. FOR GENERAL NOTES, SEE SHEET NOS. C4 & C5.
2. CONTRACTOR MAY ELIMINATE LOWER CHORD SPLICE AT JOINT L16 IF FOUND UNNECESSARY FOR HIS ERECTION PROCEDURE.

NO.	SHEET	DESCRIPTION	DATE	BY

REVISIONS

WEST VIRGINIA DEPARTMENT OF HIGHWAYS
CHARLESTON, WEST VIRGINIA
INTERSTATE ROUTE NO. 77

I-77 OVER BLUESTONE RIVER
BRIDGE NO. 3010
CONTINUOUS TRUSS SPANS - JOINT DETAILS X

DESIGNED BY: R.C.S.
DRAWN BY: A.J.S., O.A.B.
CHECKED BY: J.W.A.

GREINER ENGINEERING SCIENCES, INC.
CONSULTING ENGINEERS
BALTIMORE, MARYLAND
CHARLESTON, WEST VIRGINIA

DATE: NOV. 1975
SCALE: 3/4" = 1'-0"
SHEET C52

PUBLIC ROADS DIV.	STATE DIST. NO.	STATE PROJ. NO.	FEDERAL PROJ. NO.	FISCAL YEAR	COUNTY	SHEET NO.	TOTAL SHEETS
W. VA.	10	328-77-17,42	I-77 20817		MERCER	C53	86

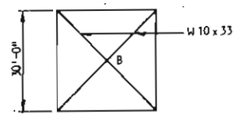

P.P. 1, 2 AND 16

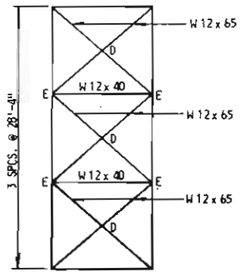

P.P. 9

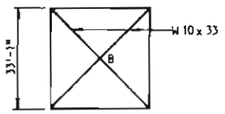

P.P. 4 AND 14

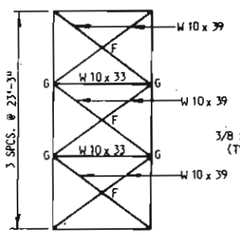

P.P. 10

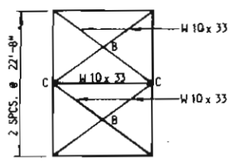

P.P. 6 AND 12

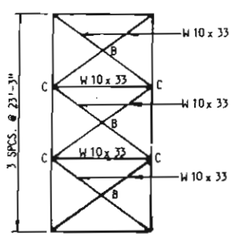

P.P. 8

SWAY FRAME SCHEMATIC DIAGRAMS

SCALE: NONE

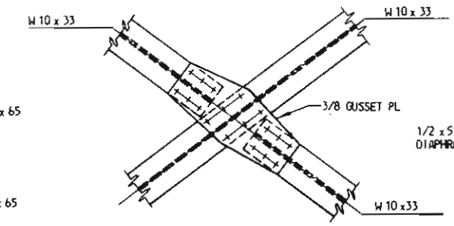

JOINT B

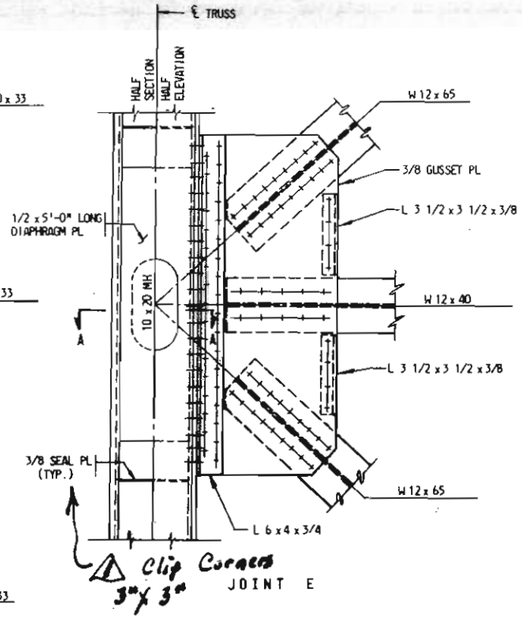

JOINT E

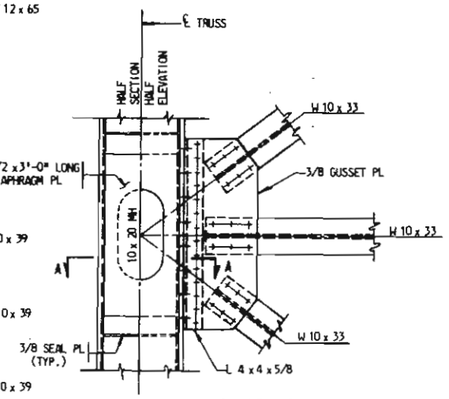

JOINT C

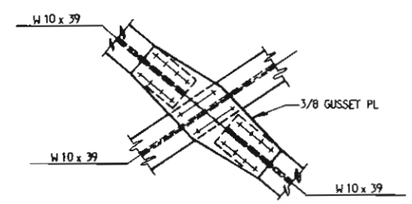

JOINT F

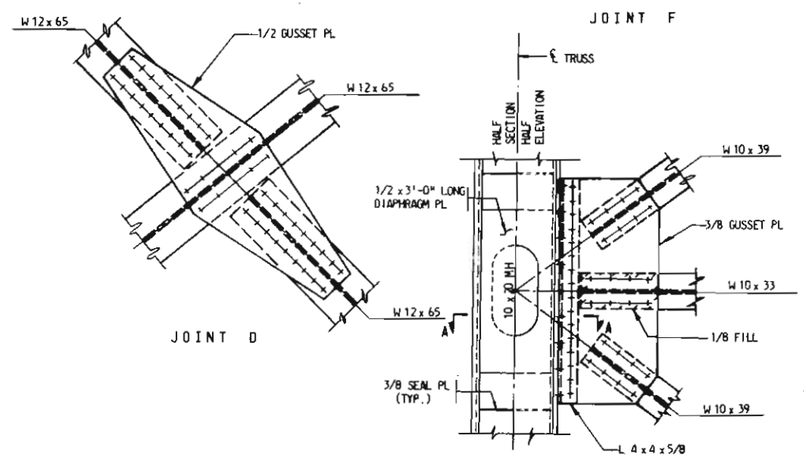

JOINT D

JOINT G

SWAY FRAME DETAILS

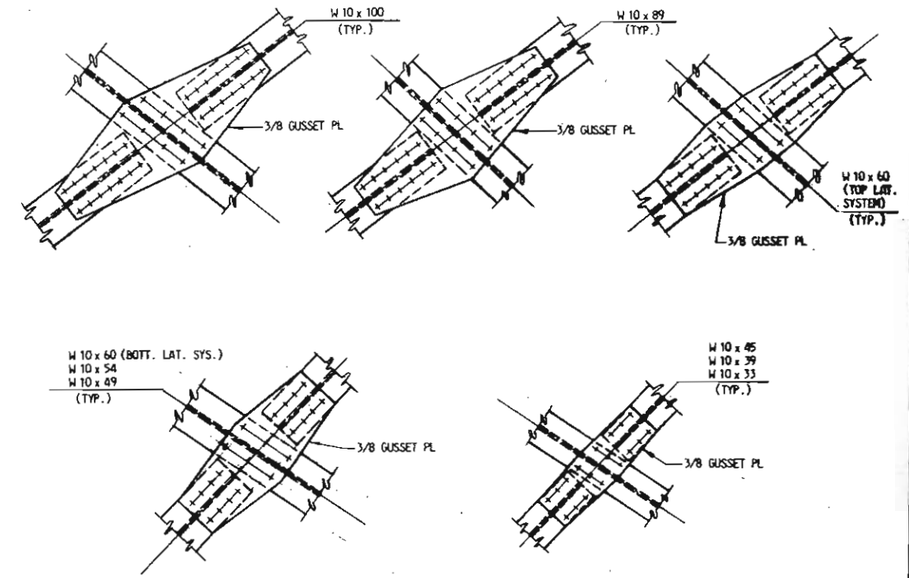

JUNCTION OF DIAGONALS
LATERAL BRACING

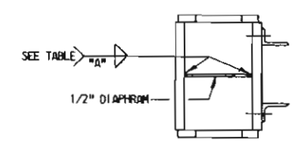

SECTION A-A
(P.P. 9 SHOWN - OTHERS SIMILAR)

PANEL PT	"A"
6	5/16
8	5/16
9	1/2
10	3/8
12	3/8

NOTES:

1. FOR GENERAL NOTES SEE SHEET NOS. C4 & C5.

NO.	SHEET	DESCRIPTION	DATE	BY
1		Clip Corners	1-18-77	JLD

REVISIONS

WEST VIRGINIA DEPARTMENT OF HIGHWAYS
CHARLESTON, WEST VIRGINIA
INTERSTATE ROUTE NO. 77

I-77 OVER BLUESTONE RIVER
BRIDGE NO. 3010
CONTINUOUS TRUSS SPANS - LATERAL & SWAY BRACING DETAILS

DESIGNED BY: R.R.F., R.H.W.
DRAWN BY: E.R.A.
CHECKED BY: R.H.W. & J.W.A.

GREINER ENGINEERING SCIENCES, INC.
CONSULTING ENGINEERS
BALTIMORE, MARYLAND
CHARLESTON, WEST VIRGINIA

DATE: NOV. 1975
SCALE: 3/4" = 1'-0"
SHEET C53

PUBLIC ROADS DIV.	STATE DIST. NO.	STATE PROJ. NO.	FEDERAL PROJ. NO.	FISCAL YEAR	COUNTY	SHEET NO.	TOTAL SHEETS
W. VA.	10	328-77-17.42	I-77 2069 17		MERCER	C54	86

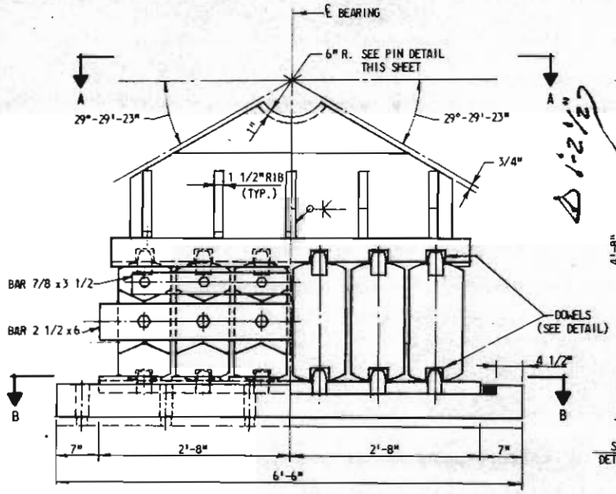

ELEVATION

SECTION C-C

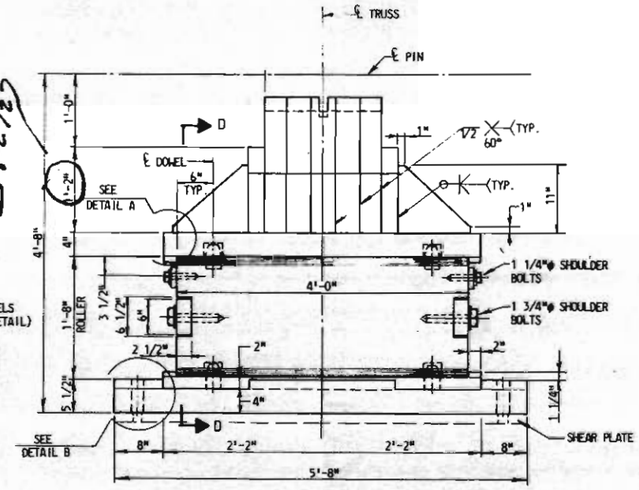

END VIEW

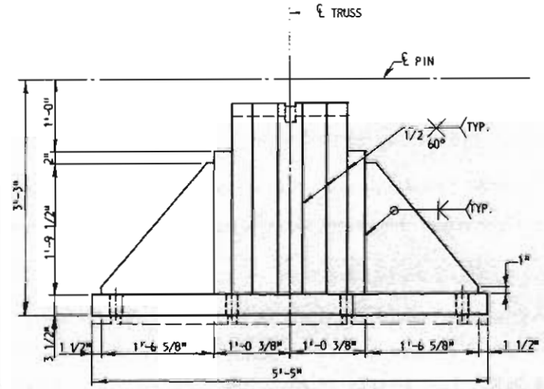

END VIEW

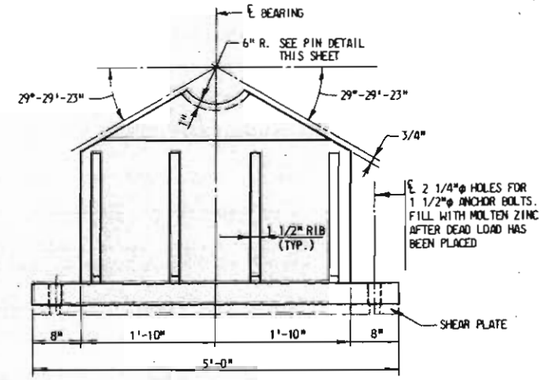

ELEVATION

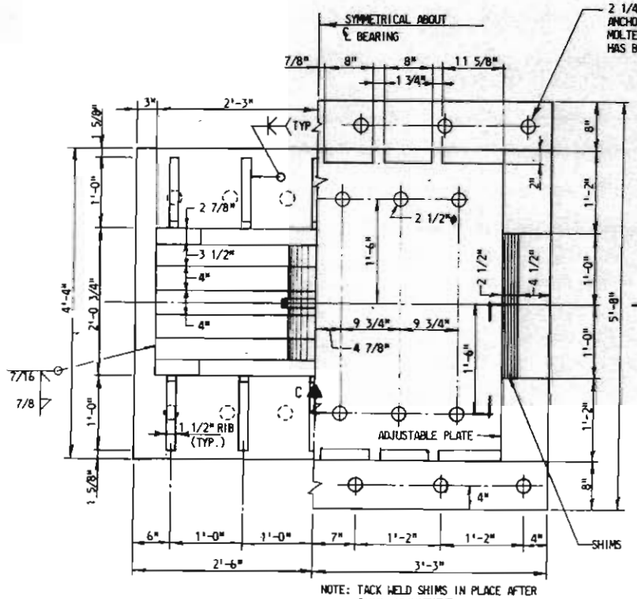

NOTE: TACK WELD SHIMS IN PLACE AFTER FINAL ADJUSTMENT.

HALF VIEW A-A HALF VIEW B-B

PLAN

EXPANSION SHOE - PIER 4

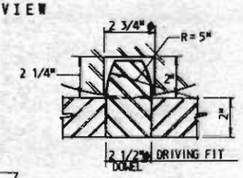

DOWEL DETAIL

SCALE: 3" = 1'-0"

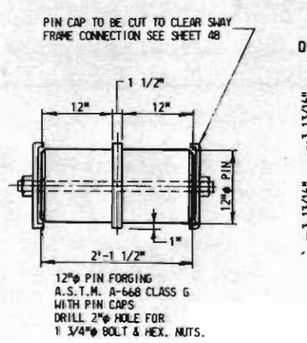

PIN DETAIL

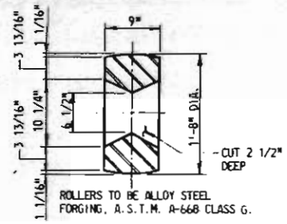

SECTION D-D

ROLLER DETAIL AT LOCKBAR

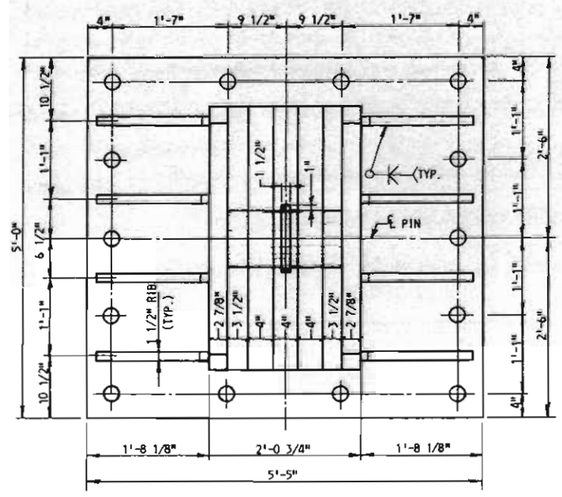

PLAN

FIXED SHOE - PIER 3

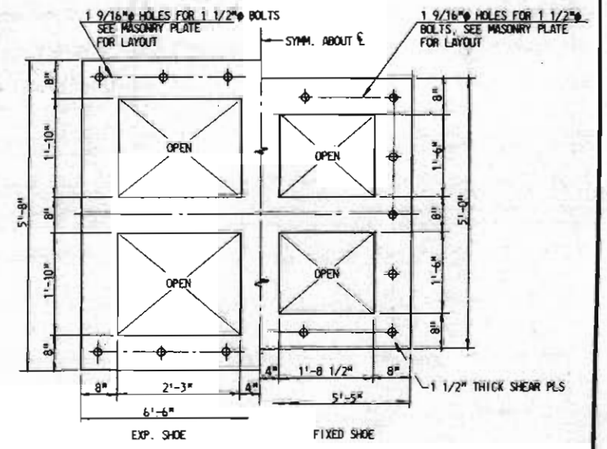

SHEAR PLATE

SCALE: 3/4" = 1'-0"

NOTES:

1. FOR GENERAL NOTES, SEE SHEET NOS. C4 & C5.
2. FOR ANCHOR BOLT DETAILS, SEE SHEET NO. C12.

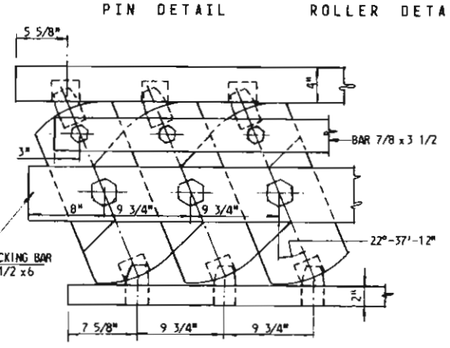

ROLLERS IN LOCKED POSITION

SCALE: 1 1/2" = 1'-0"

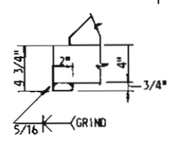

DETAIL A

SCALE: 1 1/2" = 1'-0"

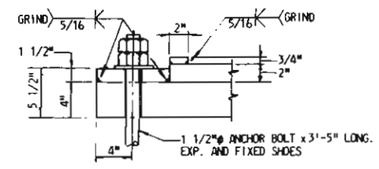

DETAIL B

SCALE: 1 1/2" = 1'-0"

NO.	SHEET	DESCRIPTION	DATE	BY
1		Correct Shoe Dim.	1-19-77	LLD

REVISIONS

WEST VIRGINIA DEPARTMENT OF HIGHWAYS
CHARLESTON, WEST VIRGINIA
INTERSTATE ROUTE NO. 77

I-77 OVER BLUESTONE RIVER
BRIDGE NO. 3010
CONTINUOUS TRUSS SPANS - BEARING DETAILS I

DESIGNED BY: F.P.
DRAWN BY: E.R.A. & A.J.S.
CHECKED BY: F.P. & J.M.M.

GREINER ENGINEERING SCIENCES, INC.
CONSULTING ENGINEERS
BALTIMORE, MARYLAND
CHARLESTON, WEST VIRGINIA

DATE: NOV. 1975
SCALE 1" = 1'-0" & AS NOTED
SHEET C54

PUBLIC ROADS DIV.	STATE DIST. NO.	STATE PROJ. NO.	FEDERAL PROJ. NO.	FISCAL YEAR	COUNTY	SHEET NO.	TOTAL SHEETS
W.VA.	10	328-77-17.42	I-77 206117		MERCER	C55	86

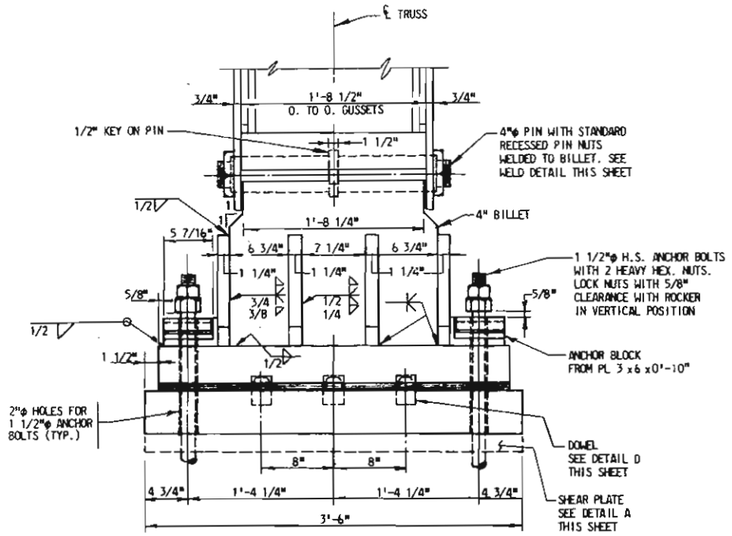

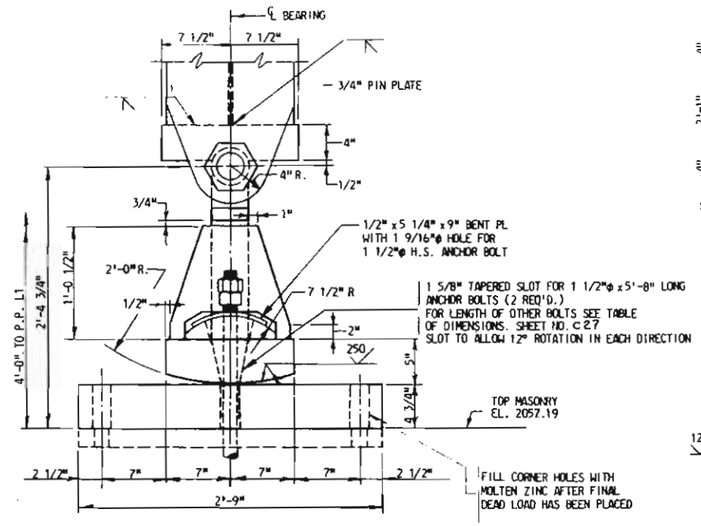

EXPANSION SHOES - PIER 2
SCALE: 1 1/2" = 1'-0"

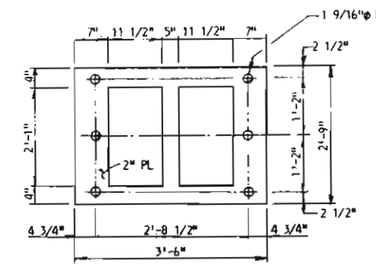

DETAIL A
SHEAR PLATE - PIER 2
SCALE: 3/4" = 1'-0"

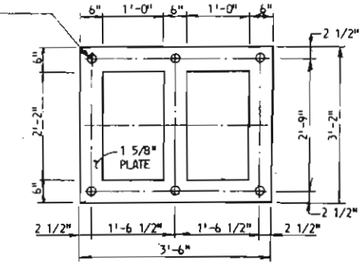

DETAIL B
SHEAR PLATE - PIER 5
SCALE: 3/4" = 1'-0"

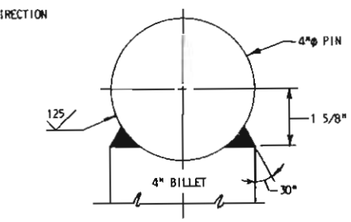

BILLET TO PIN WELD DETAIL
SCALE: 6" = 1'-0"

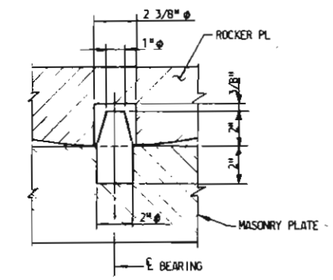

DETAIL D
SCALE: 3" = 1'-0"

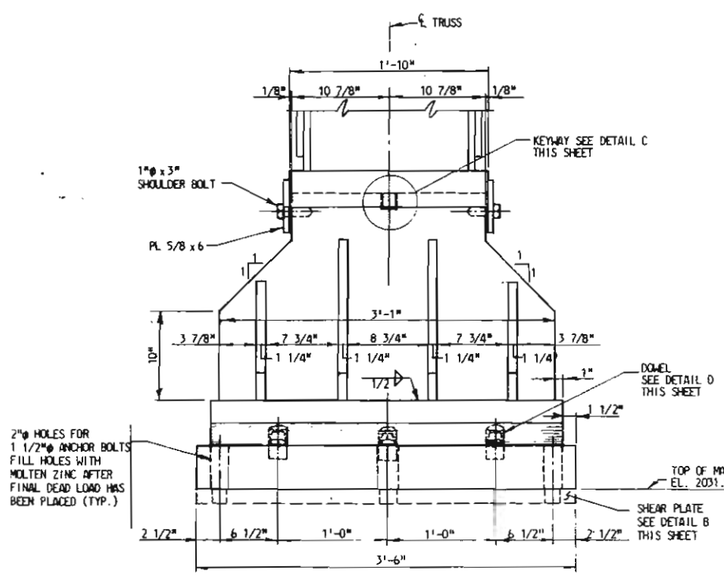

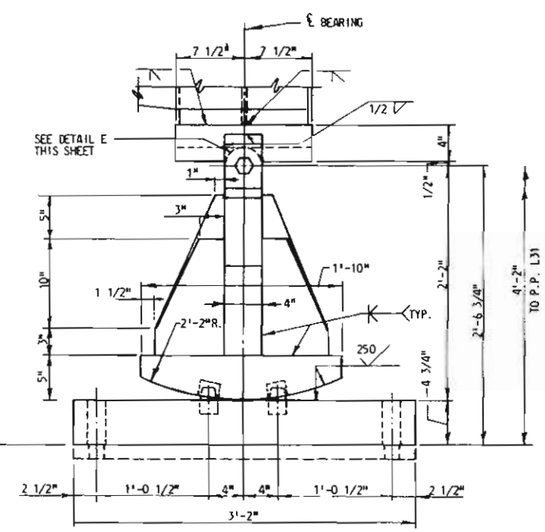

EXPANSION SHOES - PIER 5
SCALE: 1 1/2" = 1'-0"

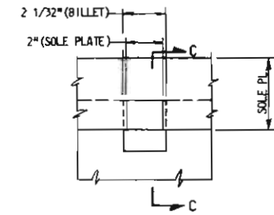

DETAIL C
SCALE: 3" = 1'-0"

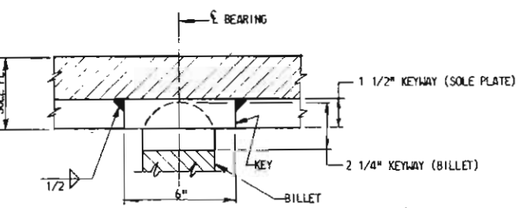

SECTION C-C
SCALE: 3" = 1'-0"

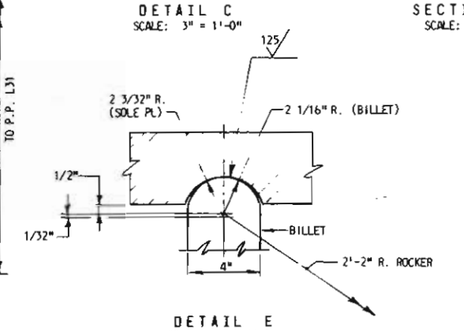

DETAIL E
SCALE: 3" = 1'-0"

NOTES:

1. FOR GENERAL NOTES, SEE SHEET NOS. C4 & C5.
2. FOR CONNECTION OF PIN PLATES TO TRUSS DETAIL, SEE SHEET NO. C43.
3. FOR ANCHOR BOLT DETAILS, SEE SHEET NO. C12.

NO.	SHEET	DESCRIPTION	DATE	BY

REVISIONS

WEST VIRGINIA DEPARTMENT OF HIGHWAYS
CHARLESTON, WEST VIRGINIA
INTERSTATE ROUTE NO. 77

I-77 OVER BLUESTONE RIVER
BRIDGE NO. 3010
CONTINUOUS TRUSS SPANS - BEARING DETAILS II

DESIGNED BY: T.D.J.
DRAWN BY: E.R.A.
CHECKED BY: P.N.E.

GREINER ENGINEERING SCIENCES, INC.
CONSULTING ENGINEERS
BALTIMORE, MARYLAND
CHARLESTON, WEST VIRGINIA

DATE: NOV. 1975
SCALE: AS NOTED
SHEET C55

PUBLIC ROADS DIV.	STATE DIST. NO.	STATE PROJ. NO.	FEDERAL PROJ. NO.	FISCAL YEAR	COUNTY	SHEET NO.	TOTAL SHEETS
W. VA.	10	328-77-17.42	I-77 206(17)		MERCER	C56	86

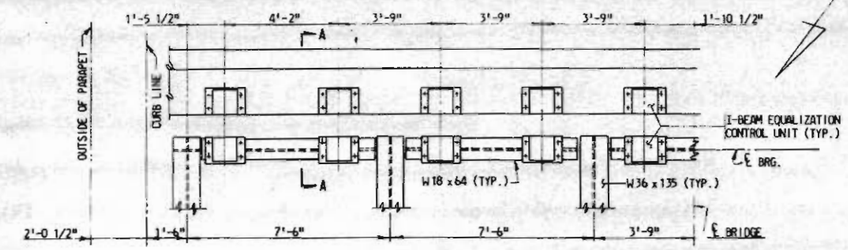

SOUTH ABUTMENT
SCALE: 3/8" = 1'-0"

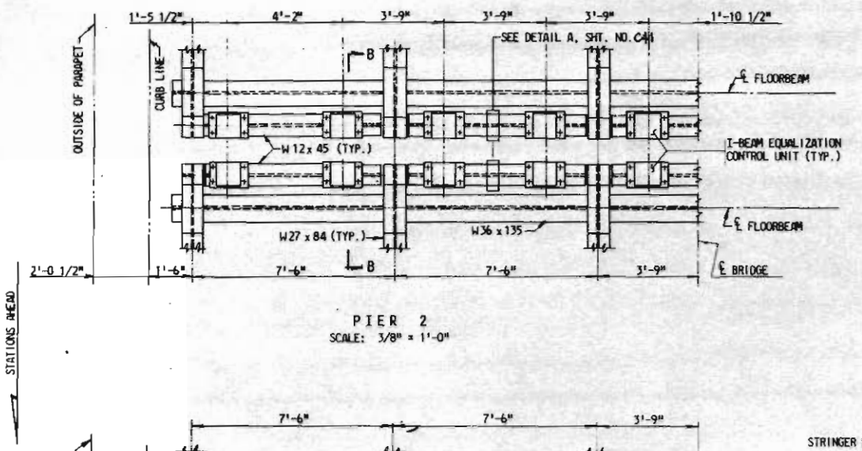

PIER 2
SCALE: 3/8" = 1'-0"

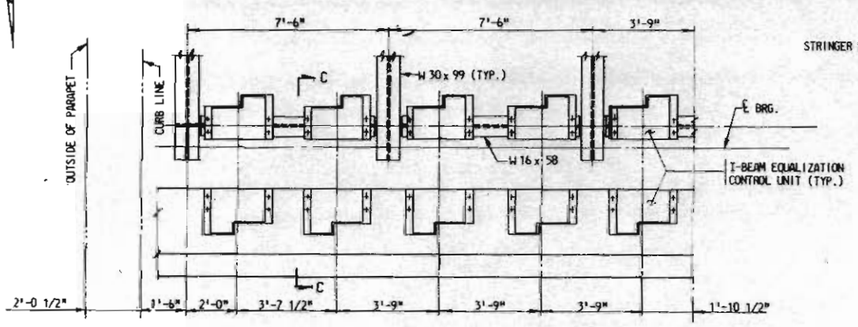

NORTH ABUTMENT
SCALE: 3/8" = 1'-0"

BRIDGE EXPANSION JOINTS

NOTE:
FOR CONSTRUCTION BETWEEN EQUALIZATION CONTROL UNITS SEE DETAIL "A" SHEET NO. C57.
FOR DETAILS IN PARAPET SEE SHEET NO. C57.

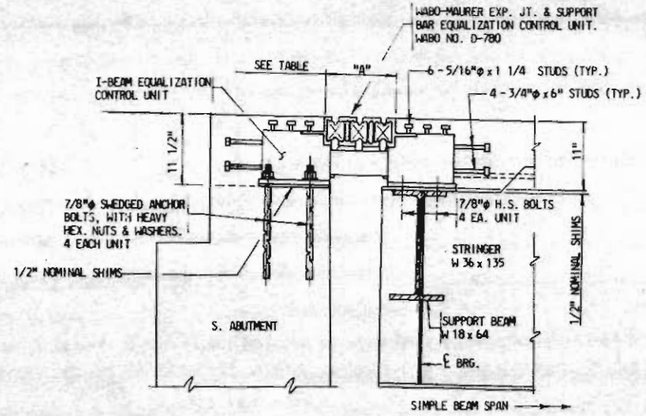

SECTION A-A
SCALE: 1" = 1'-0"

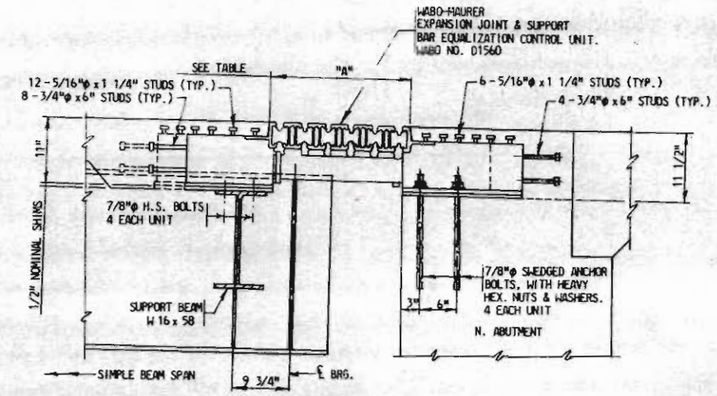

SECTION C-C
SCALE: 1" = 1'-0"

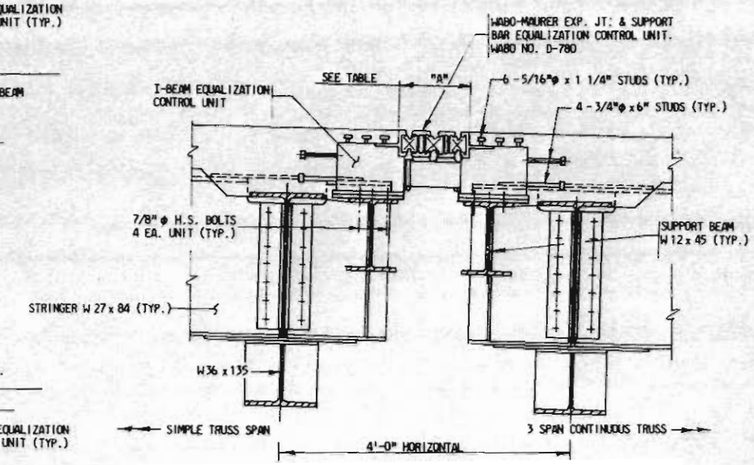

SECTION B-B
SCALE: 1" = 1'-0"

"A" DIMENSIONS					
AVERAGE TEMPERATURE AT TIME OF SETTING EXP. JOINT	S. ABUTMENT	PIER 2	N. ABUTMENT	CONT. TRUSS P.P. 9, 16 & 23	PIERS 1 & 5
30°	12 11/16"	12 5/8"	26 5/16"	2"	2"
40°	12 7/16"	12 3/8"	25 5/8"	2"	2"
50°	12 3/16"	12 3/16"	25"	2"	2"
60°	11 7/8"	11 15/16"	24 5/16"	2"	2"
68°	11 11/16"	11 3/4"	23 3/4"	2"	2"
80°	11 3/8"	11 1/2"	22 15/16"	2"	2"
90°	11 1/16"	11 1/4"	22 1/4"	2"	2"

NOTES:
1. FOR GENERAL NOTES, SEE SHEET NOS. C4 & C5.

There was a discrepancy between Shop drawings and plans concerning charts on expansion dams. The decision was to use both T. meet field conditions. This was approved by Les Smith design div. on 8-11-78

NO.	SHEET	DESCRIPTION	DATE	BY

REVISIONS

WEST VIRGINIA DEPARTMENT OF HIGHWAYS
CHARLESTON, WEST VIRGINIA
INTERSTATE ROUTE NO. 77

I-77 OVER BLUESTONE RIVER
BRIDGE NO. 3010
EXPANSION DAMS I

DESIGNED BY: E.G.R.
DRAWN BY: E.R.A.
CHECKED BY: J.W.A.

GREINER ENGINEERING SCIENCES, INC.
CONSULTING ENGINEERS
BALTIMORE, MARYLAND
CHARLESTON, WEST VIRGINIA

DATE: NOV. 1975
SCALE: AS NOTED
SHEET C56

PUBLIC ROADS DIV.	STATE DIST. NO.	STATE PROJ. NO.	FEDERAL PROJ. NO.	FISCAL YEAR	COUNTY	SHEET NO.	TOTAL SHEETS
W.VA.	10	328-77-17.42	I-77 20917		MERCER	C57	86

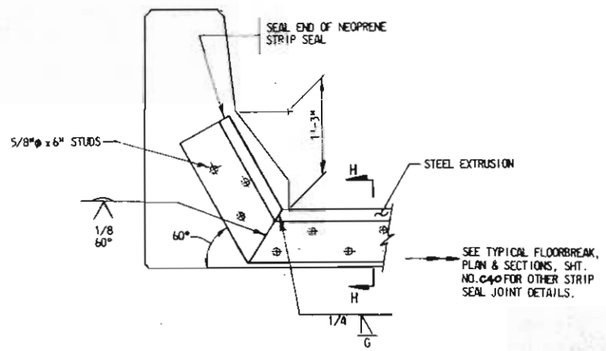

STRIP SEAL JOINT IN PARAPET
SCALE: 1" = 1'-0"

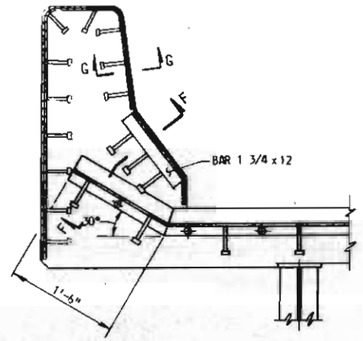

SECTION E-E

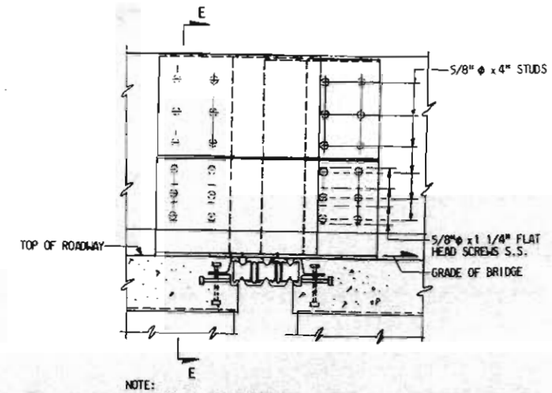

NOTE:
S. ABUT. & PIER 2 SHOWN
N. ABUT. SIMILAR.

ELEVATION

EXPANSION JOINTS IN PARAPET
SCALE: 1" = 1'-0"

NOTE:
STRIP SEAL JOINT IN PARAPET OCCURS AT PIERS 1 & 5 AND AT P.P. 9, 16 & 23 OF CONTINUOUS TRUSS SPAN.

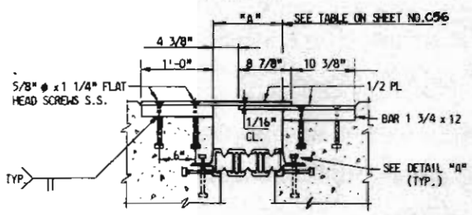

SECTION F-F

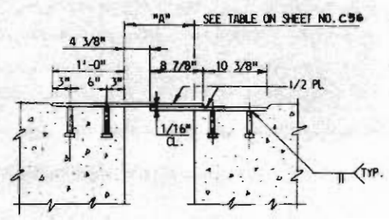

SECTION G-G

EXPANSION JOINT IN PARAPET AT S. ABUTMENT & PIER 2
SCALE: 1" = 1'-0"

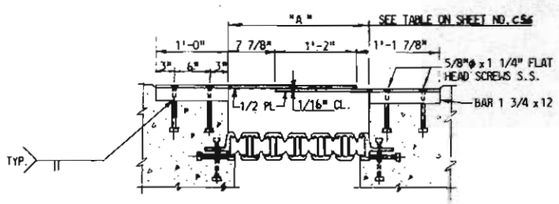

SECTION F-F

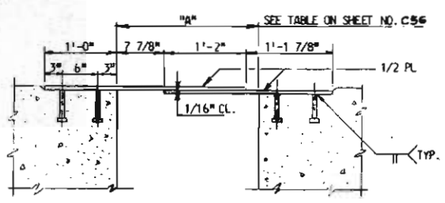

SECTION G-G

EXPANSION JOINT IN PARAPET AT N. ABUTMENT
SCALE: 1" = 1'-0"

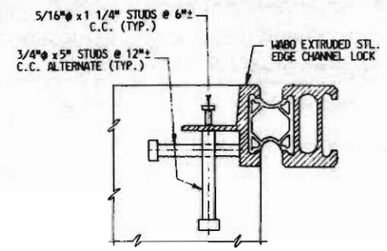

DETAIL "A"
SCALE: 3" = 1'-0"

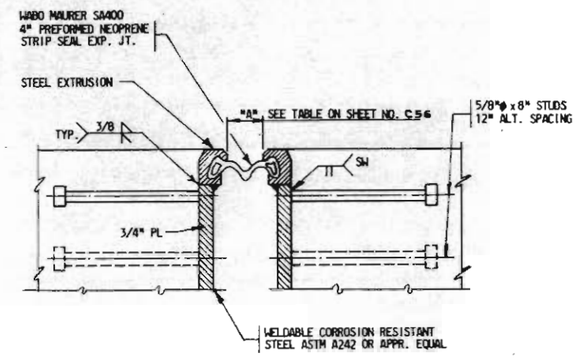

SECTION H-H
SCALE: 3" = 1'-0"

NOTES:
1. FOR GENERAL NOTES, SEE SHEET NOS. C4 & C5.

NO.	SHEET	DESCRIPTION	DATE	BY

REVISIONS

WEST VIRGINIA DEPARTMENT OF HIGHWAYS
CHARLESTON, WEST VIRGINIA
INTERSTATE ROUTE NO. 77

I-77 OVER BLUESTONE RIVER
BRIDGE NO. 3010
EXPANSION DAMS II

DESIGNED BY: L.G.R.
DRAWN BY: E.R.A.
CHECKED BY: J.W.A.

GREINER ENGINEERING SCIENCES, INC.
CONSULTING ENGINEERS
BALTIMORE, MARYLAND
CHARLESTON, WEST VIRGINIA

DATE: NOV. 1975
SCALE: AS NOTED
SHEET C57

PUBLIC ROADS DIV.	STATE DIST. NO.	STATE PROJ. NO.	FEDERAL PROJ. NO.	FISCAL YEAR	COUNTY	SHEET NO.	TOTAL SHEETS
W. VA.	10	328-77-17.42	I-77 2(36)17		MERCER	C58	86

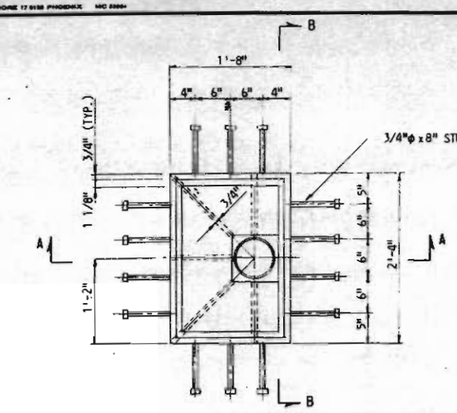

PLAN

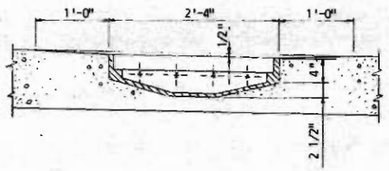

SECTION B-B

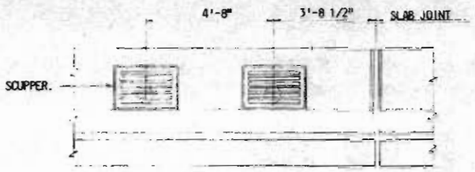

PLAN
SCALE: 3/8" = 1'-0"

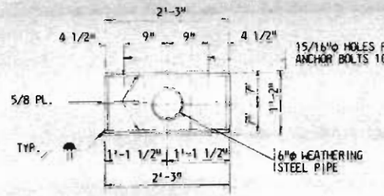

PLAN

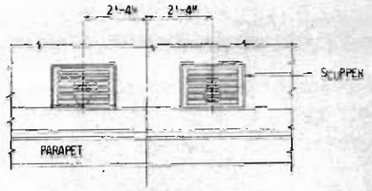

PLAN
SCALE: 3/8" = 1'-0"

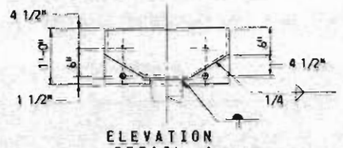

ELEVATION
DETAIL A
SCALE: 3/4" = 1'-0"

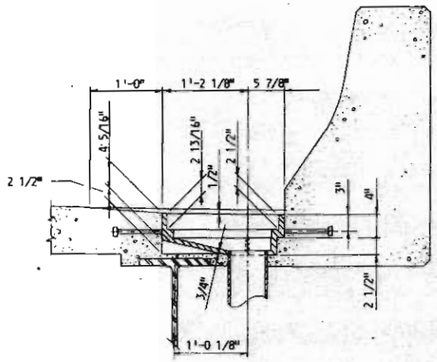

SECTION A-A

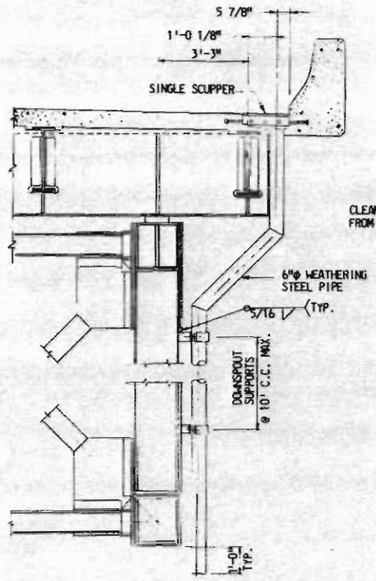

TYPICAL DOWNSPOUT DETAILS
SIMPLE TRUSS PANEL POINTS 2 & 6 CONTINUOUS TRUSS
PANEL POINTS 6, 10, 17, 24 & 28
SCALE: 3/8" = 1'-0"

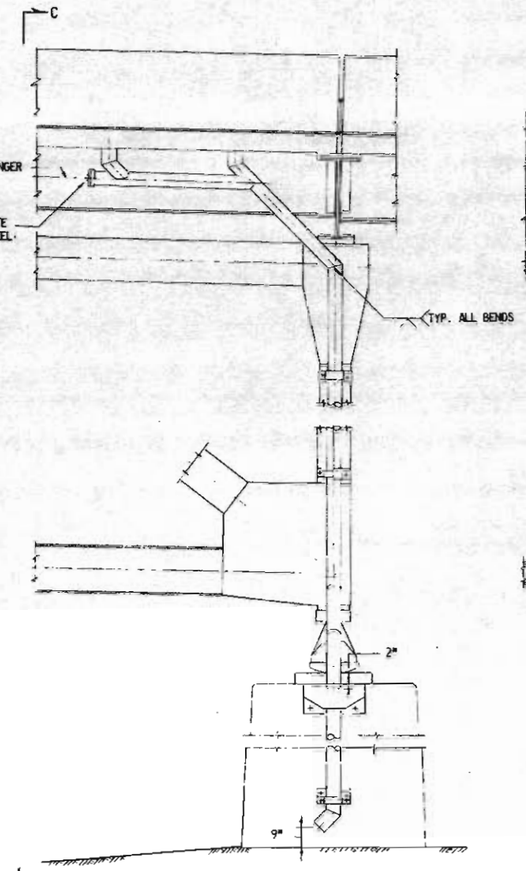

ELEVATION
DOUBLE SCUPPER
CONTINUOUS TRUSS PANEL POINT 31
SCALE: 3/8" = 1'-0"

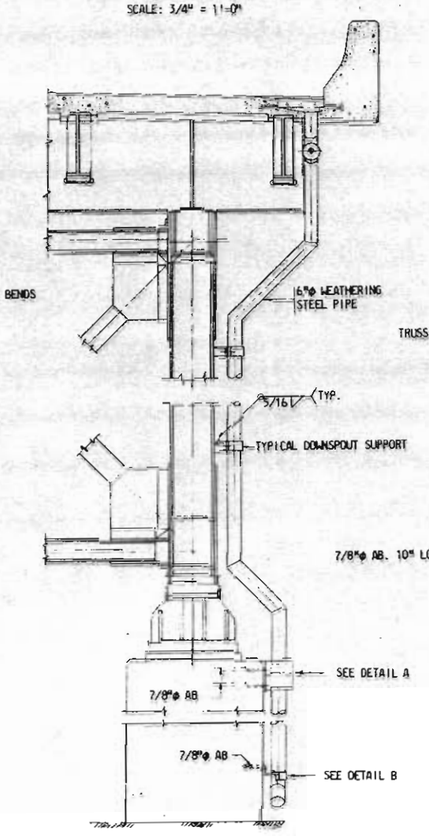

SECTION C-C
SCALE: 3/8" = 1'-0"

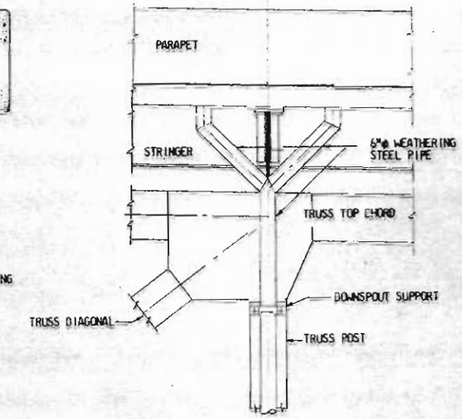

ELEVATION
DOUBLE SCUPPER
CONTINUOUS TRUSS PANEL POINTS 2, 14, & 20
SCALE: 3/8" = 1'-0"

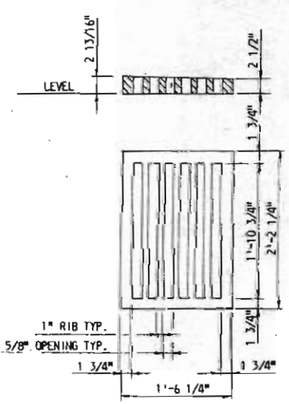

GRATING

SCUPPER DETAILS
SCALE: 1" = 1'-0"

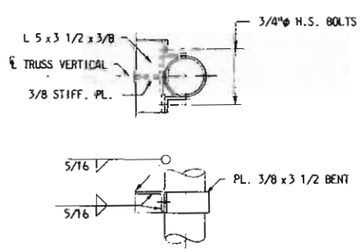

DOWNSPOUT SUPPORT DETAILS
SCALE: 1" = 1'-0"

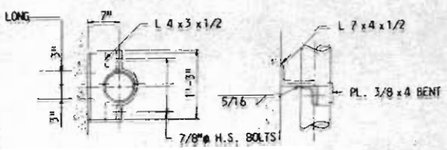

PLAN ELEVATION

DETAIL B
SCALE: 3/4" = 1'-0"

NOTES:

1. FOR GENERAL NOTES, SEE SHEET NOS. C4 & C5.
2. DRAIN PIPES SHALL BE MADE OF A.S.T.M. A588 WEATHERING STEEL.

NO.	SHEET	DESCRIPTION	DATE	BY

REVISIONS

WEST VIRGINIA DEPARTMENT OF HIGHWAYS
CHARLESTON, WEST VIRGINIA
INTERSTATE ROUTE NO. 77

I-77 OVER BLUESTONE RIVER
BRIDGE NO. 3010
SCUPPER DETAILS

DESIGNED BY: E.G.R.
DRAWN BY: L.M.L.
CHECKED BY: C.S.S.

GREINER ENGINEERING SCIENCES, INC.
CONSULTING ENGINEERS
BALTIMORE, MARYLAND
CHARLESTON, WEST VIRGINIA

DATE: NOV. 1975
SCALE: AS NOTED
SHEET C58

PUBLIC ROADS DIV.	STATE DIST. NO.	STATE PROJ. NO.	FEDERAL PROJ. NO.	FISCAL YEAR	COUNTY	SHEET NO.	TOTAL SHEETS
W. VA.	10	328-77-17.42	I-77 2(26)17		MERCER	C59	

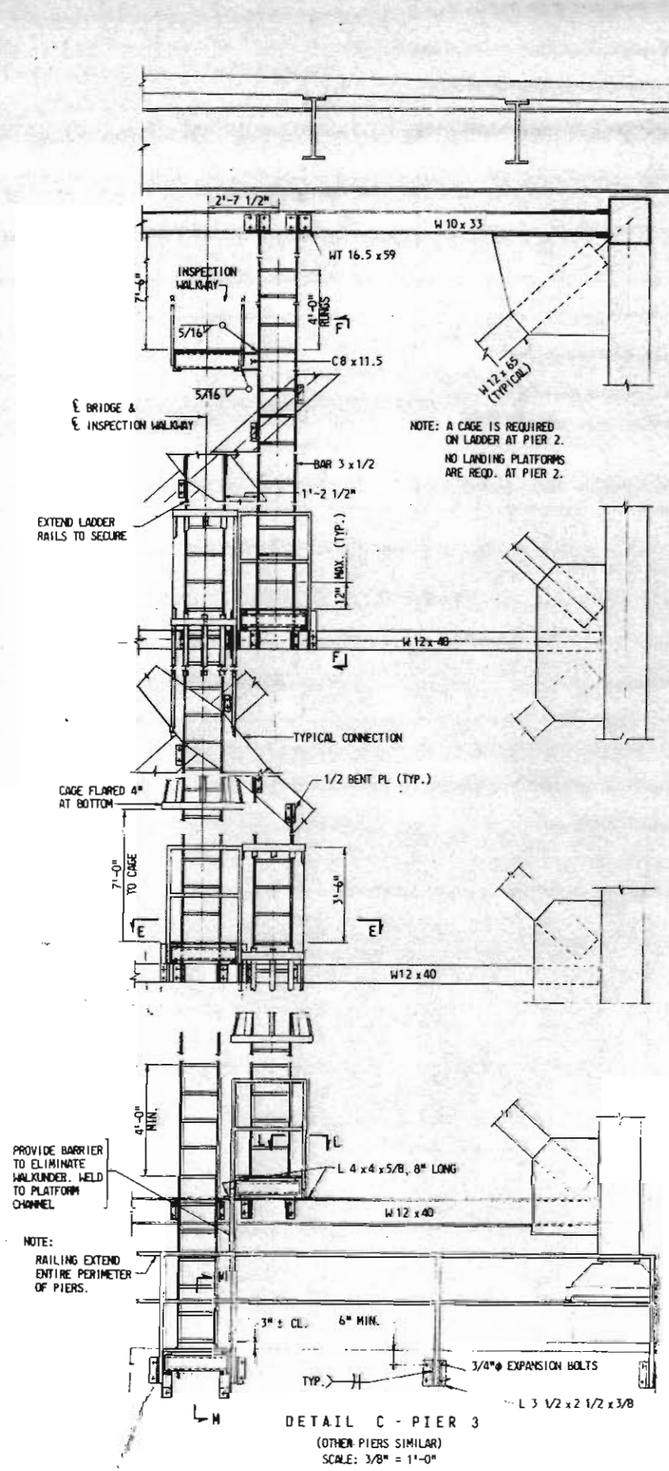

NOTE: A CAGE IS REQUIRED ON LADDER AT PIER 2.
NO LANDING PLATFORMS ARE REQD. AT PIER 2.

DETAIL C - PIER 3
(OTHER PIERS SIMILAR)
SCALE: 3/8" = 1'-0"

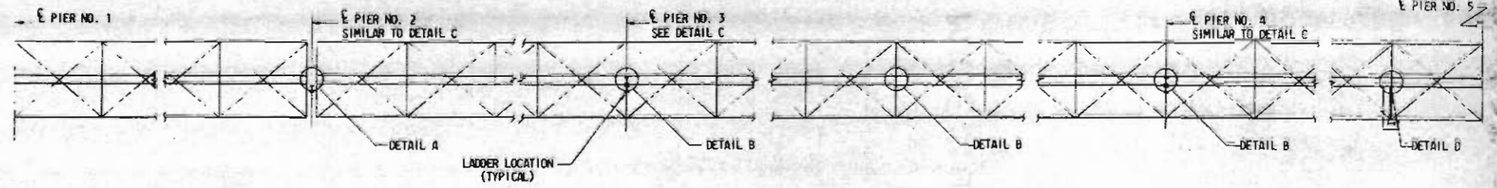

KEY PLAN
SCALE: NONE

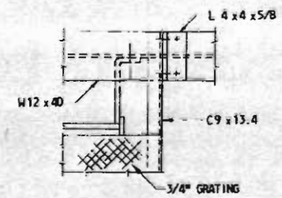

VIEW L-L
SCALE: 1" = 1'-0"

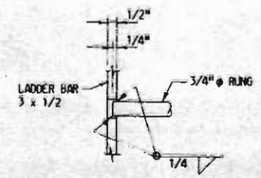

TYP. RUNG CONNECTION
SCALE: 3" = 1'-0"

NOTE: LADDER RUNGS:

1. RUNGS SHALL BE UNIFORMLY SPACED THROUGHOUT THE LENGTH OF THE LADDER.
2. THE MAXIMUM SPACING OF RUNGS SHALL BE 12".
3. ONE RUNG OF ANY SECTION OF LADDER SHALL BE LOCATED AT THE LEVEL OF THE LANDING LATERALLY SERVED BY THE LADDER.

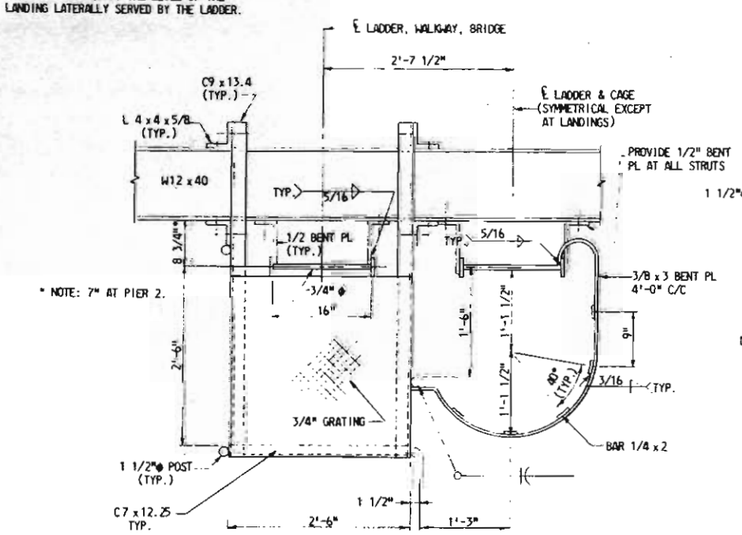

* NOTE: 7" AT PIER 2.

VIEW E-E
SCALE: 1" = 1'-0"

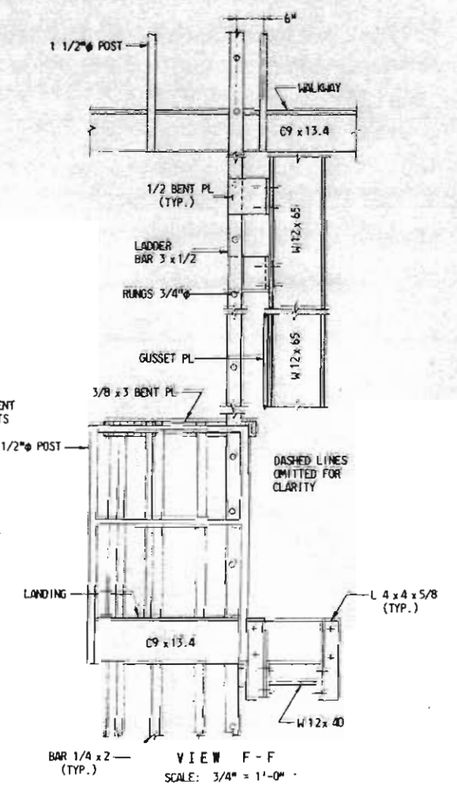

VIEW F-F
SCALE: 3/4" = 1'-0"

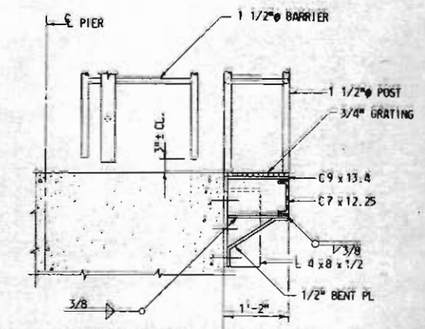

NOTE: PLATFORM FOR PIERS 3 & 4 ONLY.

SECTION M-M
SCALE: 3/4" = 1'-0"

NOTES:

1. FOR GENERAL NOTES, SEE SHEET NOS. C4 & C5.
2. MINIMUM WALL THICKNESS OF 1 1/2" TUBING SHALL BE 1/4".
3. LIVE LOAD ON WALKWAYS & PLATFORMS - 100 PSF.
4. ALL BOLTS SHALL BE 3/4"φ ASTM A325 TYPE 3 H.S. BOLTS.
5. FLOORING ON ALL WALKWAYS & PLATFORMS SHALL BE 3/4" GRATING.

NO.	SHEET	DESCRIPTION	DATE	BY

REVISIONS

WEST VIRGINIA DEPARTMENT OF HIGHWAYS
CHARLESTON, WEST VIRGINIA
INTERSTATE ROUTE NO. 77

I-77 OVER BLUESTONE RIVER
BRIDGE NO. 3010
INSPECTION FACILITIES I

DESIGNED BY: R.R.F.
DRAWN BY: L.M.L.
CHECKED BY: R.C.S.

GREINER ENGINEERING SCIENCES, INC.
CONSULTING ENGINEERS
BALTIMORE, MARYLAND
CHARLESTON, WEST VIRGINIA

DATE: NOV. 1975
SCALE: AS SHOWN
SHEET C51

PUBLIC ROADS DIV.	STATE DIST. NO.	STATE PROJ. NO.	FEDERAL PROJ. NO.	FISCAL YEAR	COUNTY	SHEET NO.	TOTAL SHEETS
W. VA.	10	328-77-17.42	I-77 206(17)		MERCER	C60	86

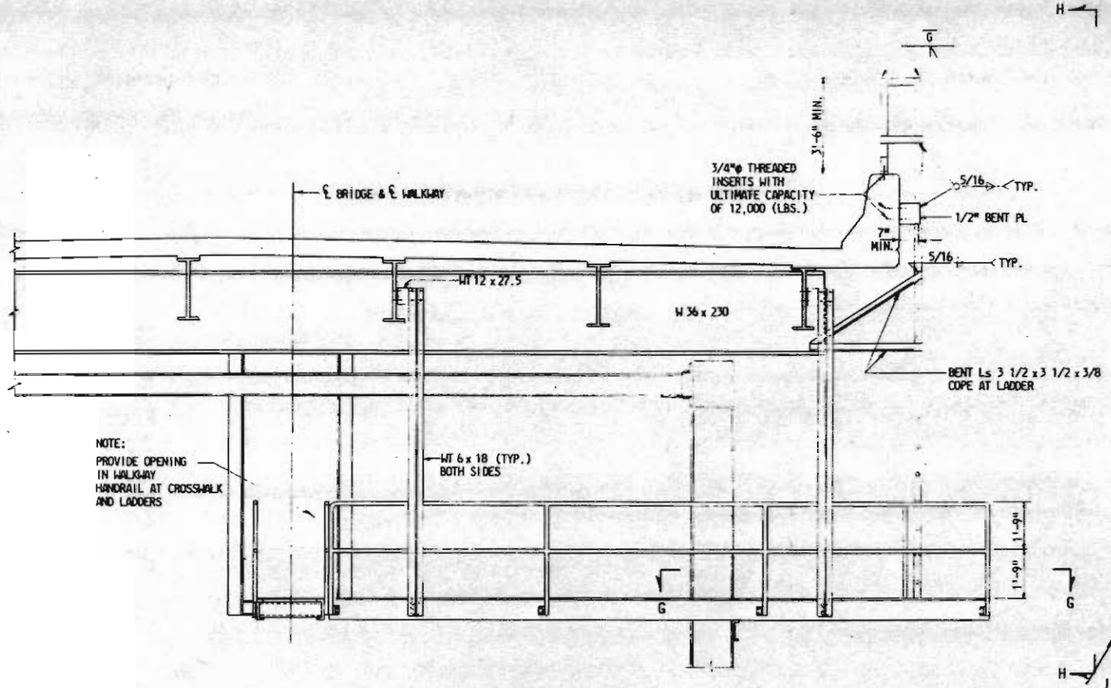

DETAIL D
SCALE: 3/8" = 1'-0"

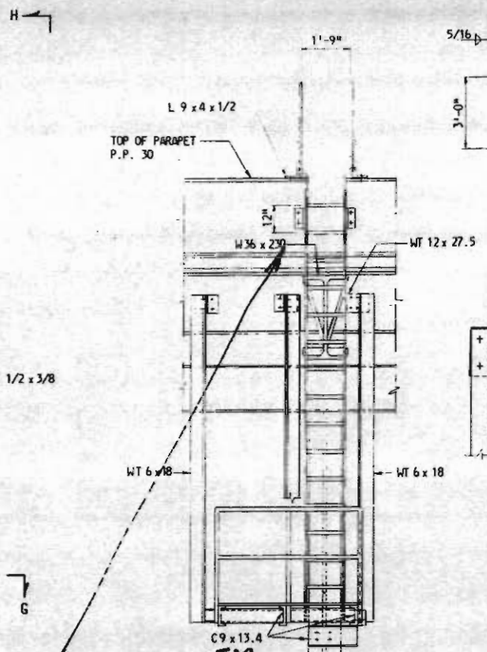

Alteration on Top section of access ladders piers 3 & 4 Change approved by design letter & SK-4 8-1-78

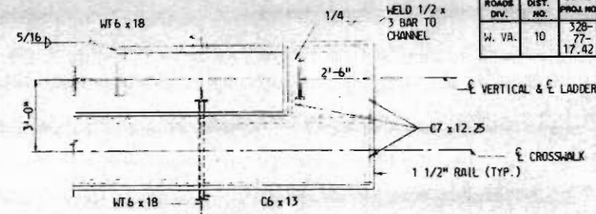

VIEW G-G

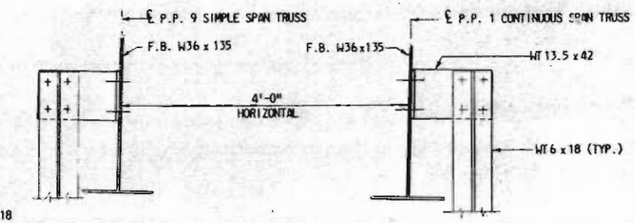

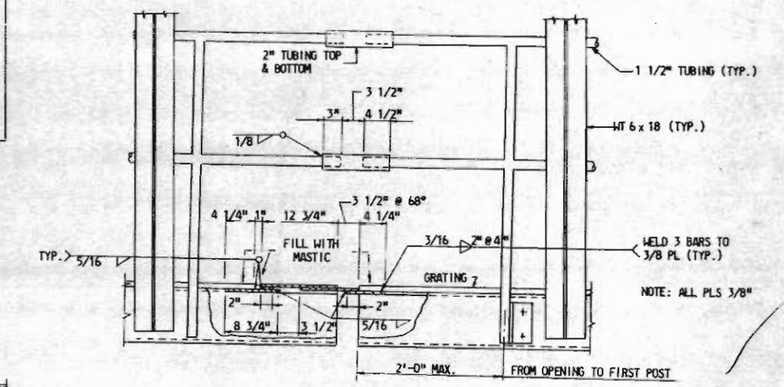

DETAIL A - PIER 2
SCALE: 1" = 1'-0"

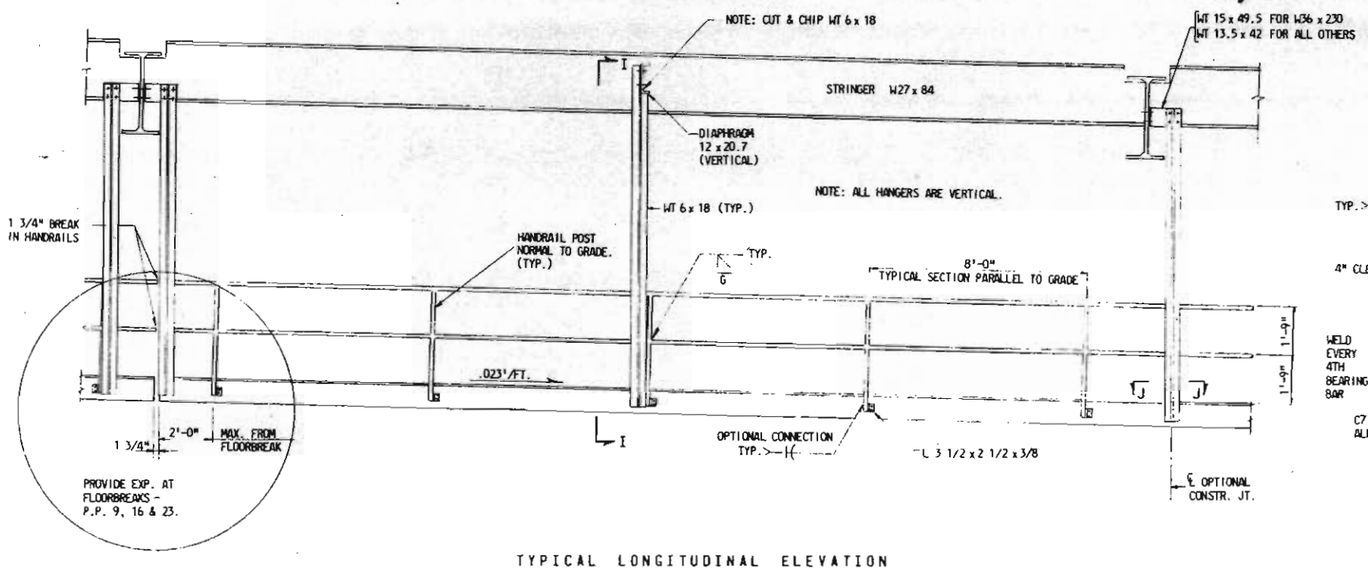

DETAIL B

TYPICAL LONGITUDINAL ELEVATION
SCALE: 3/8" = 1'-0"

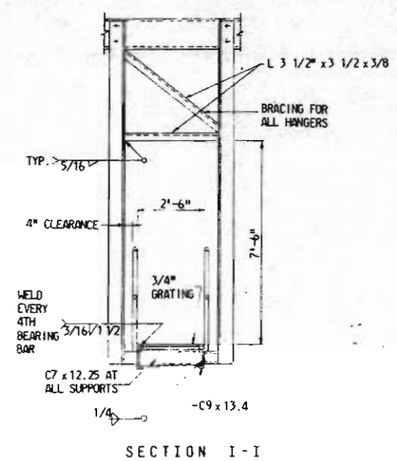

SECTION I-I

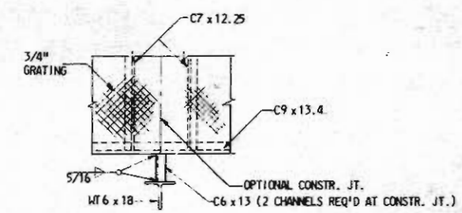

VIEW J-J

NOTES:

1. FOR GENERAL NOTES, SEE SHEET NOS. C4 & C5.
2. FOR INSPECTION FACILITIES NOTES, SEE SHEET C59.

See 3-28-77 letter to Files for changes

NO.	SHEET	DESCRIPTION	DATE	BY

REVISIONS

WEST VIRGINIA DEPARTMENT OF HIGHWAYS
CHARLESTON, WEST VIRGINIA
INTERSTATE ROUTE NO. 77

I-77 OVER BLUESTONE RIVER
BRIDGE NO. 3010
INSPECTION FACILITIES II

DESIGNED BY: R.R.F.
DRAWN BY: L.M.L.
CHECKED BY: R.C.S., R.R.F.

GREINER ENGINEERING SCIENCES, INC.
CONSULTING ENGINEERS
BALTIMORE, MARYLAND
CHARLESTON, WEST VIRGINIA

DATE: NOV. 1975
SCALE 3/8" = 1'-0" & AS SHOWN
SHEET C60

PUBLIC ROADS DIV.	STATE DIV. NO.	STATE PROJ. NO.	FEDERAL PROJ. NO.	FISCAL YEAR	COUNTY	SHEET NO.	TOTAL SHEETS
W. VA.	10	328-77-17.42	I-77-2(36)17		MERCER	C61	86

* SEE CROSS SECTIONS FOR SLOPE DETAILS

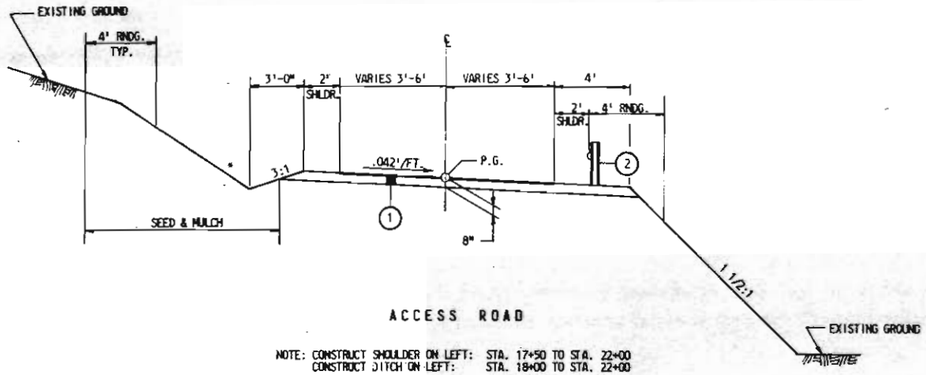

ACCESS ROAD

NOTE: CONSTRUCT SHOULDER ON LEFT: STA. 17+50 TO STA. 22+00
CONSTRUCT DITCH ON LEFT: STA. 18+00 TO STA. 22+00

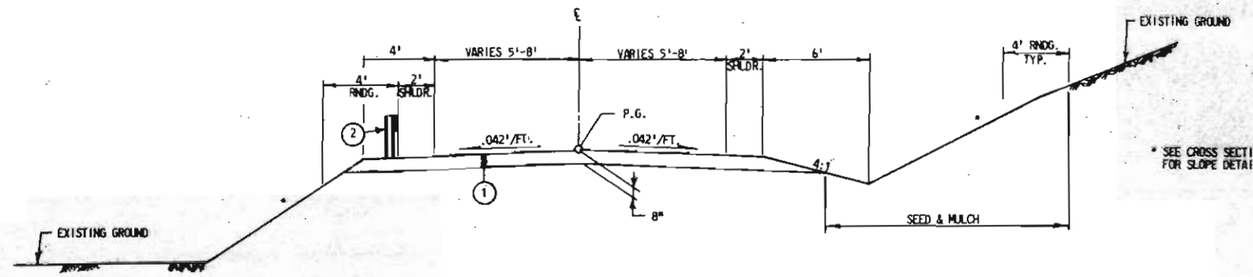

* SEE CROSS SECTIONS FOR SLOPE DETAILS

TANGENT SECTION

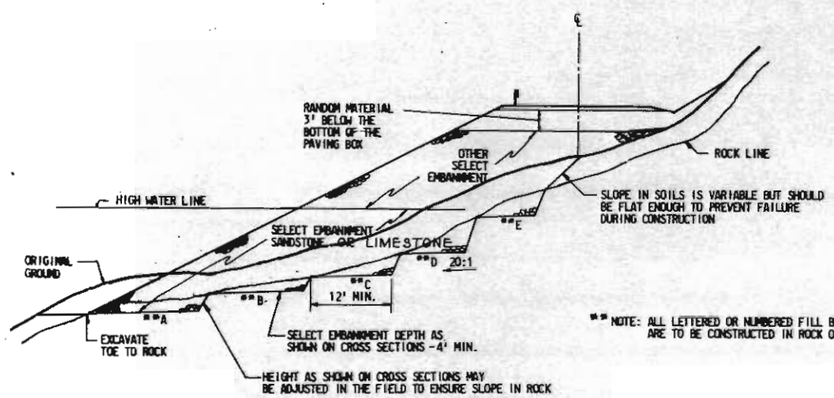

** NOTE: ALL LETTERED OR NUMBERED FILL BENCHES ARE TO BE CONSTRUCTED IN ROCK OR SHALE.

TYPICAL FILL BENCH DESIGN

NOTE: THE SELECT EMBANKMENT BELOW THE HIGH WATER LINE SHALL BE SANDSTONE OR LIMESTONE. NO SHALE TO BE USED BELOW THE HIGHWATER LINE.

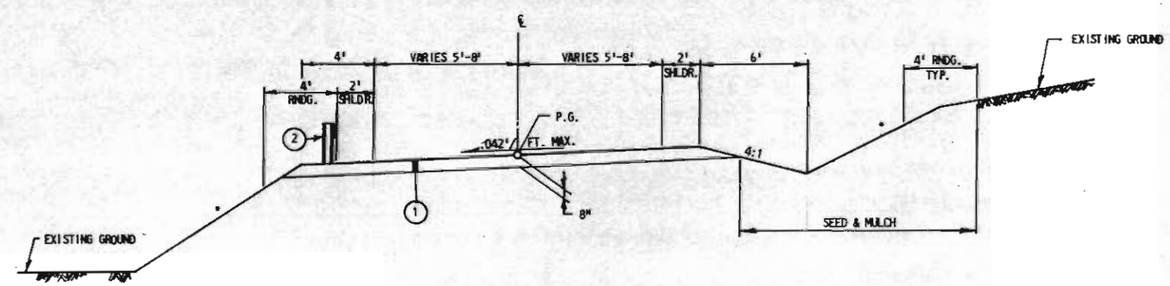

SUPERELEVATED SECTION

RELOCATED COUNTY ROUTE 3

LEGEND

(1) ITEM 307-2	CLASS 2 AGGREGATE BASE COURSE
(2) ITEM 607-1(III)	TYPE 1 GUARDRAIL

RELOCATED ROADWAYS
TYPICAL SECTIONS AND DETAILS

PUBLIC ROADS DIV.	STATE DIST. NO.	STATE PROJ. NO.	FEDERAL PROJ. NO.	FISCAL YEAR	COUNTY	SHEET NO.	TOTAL SHEETS
W. VA.	10	32B-77-17.42	I-77 20817		MERCER	C62	86

PAVEMENT - BASE COURSE

STATION TO STATION			ITEM 307-2 CLASS 2 AGGREGATE BASE COURSE (C.Y.)	ITEM 307-2 CLASS 2 AGGREGATE BASE COURSE (C.Y.)	ITEM 502-1 14 1/2" PORTLAND CEMENT CONCRETE APPROACH SLAB (S.Y.)	REMARKS
BRIDGE NO. 3010			36		213	APPROACH SLABS
RELOCATED CO. RTE 3				317		
8+00 TO 13+50						
RELOCATED ACCESS ROAD						
17+00 TO 22+50				255		
TOTAL			36 *	572	213 *	

* THESE ITEMS ARE INCLUDED IN THE ESTIMATE OF SUBSTRUCTURE QUANTITIES

PIPE CULVERT SCHEDULE

STATION	ITEM 604-9 18" FULL BITUMINOUS COATED AND PAVED INVERT CORRUGATED IRON OR STEEL PIPE 0.064" THICKNESS (L.F.)		ITEM 604-14 END SECTION FOR CORRUGATED IRON OR STEEL PIPE (EA.)	ITEM 605-9 TYPE G INLET (EA.)	ITEM 655-1 MATTING (S.Y.)	REMARKS
BRIDGE NO. 3010						
511+75 LT.					32	NORTH ABUTMENT
511+75 RT.					15	NORTH ABUTMENT
RELOCATED CO. RTE 3						
10+90	54		1	1		
13+25	40		1	1		
RELOCATED ACCESS ROAD						
20+61	26		1	1		
TOTAL	120		3	3	47	

* FOR INFORMATION ONLY

SUMMARY OF GRADING QUANTITIES

LOCATION STATION TO STATION	DISTANCE (FEET)	EXCAVATION (C.Y.)	EXCAVATION * +20% SWELL	EMBANKMENT * (C.Y.)	SELECT EMBANKMENT (C.Y.) * SANDSTONE	SELECT EMBANKMENT (C.Y.) * OTHER	EXCESS * EXCAVATION (C.Y.)	SELECT EMBANKMENT NEEDED (C.Y.)	REMARKS
RELOCATED CO. RTE. 3									
8+00 TO 13+50	550	8,049	9,659	1,269	7,657	7,233	5,007	11,507	
RELOCATED ACCESS ROAD									
17+00 TO 22+50	550	7,532	9,038	719	3,512	1,322	5,531	2,046	
SUBTOTAL					11,169	8,555			
TOTAL	1,100	15,581	18,697	1,988	19,724		10,538	13,553	

PROBABLE SOURCES OF SELECT EMBANKMENT
(FOR INFORMATION ONLY)

STATION TO STATION	APPROXIMATE QUANTITIES (C.Y.) +20% SWELL SANDSTONE	GRAY SHALE	TOTAL
RELOCATED CO. RTE. 3			
8+00 TO 13+50	1603	1780	3383
RELOCATED ACCESS ROAD			
17+00 TO 22+50	605	2183	2788
TOTAL	2208	3963	6171

CHANNEL AND DITCH LINING

STATION TO STATION	W (FT.)	D (FT.)	T (FT.)	L (FT.)		ITEM 633-3 DUMPED ROCK GUTTER (C.Y.)	REMARKS
RELOCATED CO. RTE. 3							
13+25	4	0	2	91		27	
8+00 TO 10+90	0	1	1	290		116	
PIER #2	2	0	1	20		2	AT U.D. OUTLET
TOTAL						145	

GUARDRAIL

STATION TO STATION	SIDE	ITEM 607-1(I) TYPE 1 GUARDRAIL (L.F.)	ITEM 607-1(III) TYPE 1 GUARDRAIL (L.F.)	ITEM 607-23 GUARDRAIL END ANCHOR (EA.)	REMARKS
BRIDGE NO. 3010					
4%+05 TO 4%+30	LT.	25			SOUTH ABUTMENT
4%+05 TO 4%+30	RT.	25			SOUTH ABUTMENT
511+70 TO 511+95	RT.	25			NORTH ABUTMENT
RELOCATED CO. RTE. 3					
8+00 TO 13+50	LT.		550	2	
RELOCATED ACCESS ROAD					
17+00 TO 22+50	RT.		550	2	
TOTAL		75	1,100	4	

* FOR INFORMATION ONLY

CLEARING & GRUBBING - SEEDING & MULCHING

STATION TO STATION	ITEM 201-1 * CLEARING AND GRUBBING (ACREAGE)	ITEM 652-1 AGRICULTURAL LIMESTONE (TONS)	ITEM 652-2-1 FERTILIZER 10-20-10 (TONS)		ITEM 652-2-2 UREA FORMALDEHYDE FERTILIZER (TONS)	ITEM 652-3-2 SEED MIXTURES D (POUNDS)	ITEM 652-4-1 STRAW OR HAY MULCH (TONS)	
RELOCATED CO. RTE. 3								
8+00 TO 13+50	1.28	0.27	0.13		0.04	17.4	0.53	
RELOCATED ACCESS ROAD								
17+00 TO 22+50	1.19	0.53	0.26		0.08	34.1	1.05	
TOTAL	2.47	0.80	0.39		0.12	51.5	1.58	

R/W MARKERS
ITEM 638-2

Station	Type I	Type II	Offset
500+91	1	–	190' Rt.
501+06	1	–	83' Rt.
501+15	1	–	208' Rt.
502+00	1	–	245' Rt.
TOTAL	4		

NO.	SHEET	DESCRIPTION	DATE	BY

REVISIONS

WEST VIRGINIA DEPARTMENT OF HIGHWAYS
CHARLESTON, WEST VIRGINIA
INTERSTATE ROUTE NO. 77

I-77 OVER BLUESTONE RIVER
BRIDGE NO. 3010
ROADWAY QUANTITIES

DESIGNED BY: W.R.L.
DRAWN BY: L.H.
CHECKED BY: F.P.F.

GREINER ENGINEERING SCIENCES, INC.
CONSULTING ENGINEERS
BALTIMORE, MARYLAND
CHARLESTON, WEST VIRGINIA

DATE: NOV. 1975
SCALE: NONE
SHEET C62